Publication No. 8B7005
May 1996
Supersedes
January 1996

SITE SPECIFICATIONS for the *KODAK* Multiloader 700, *KODAK* Multiloader 700 Plus and the *KODAK* Multiloader 700 Side-By-Side Kit

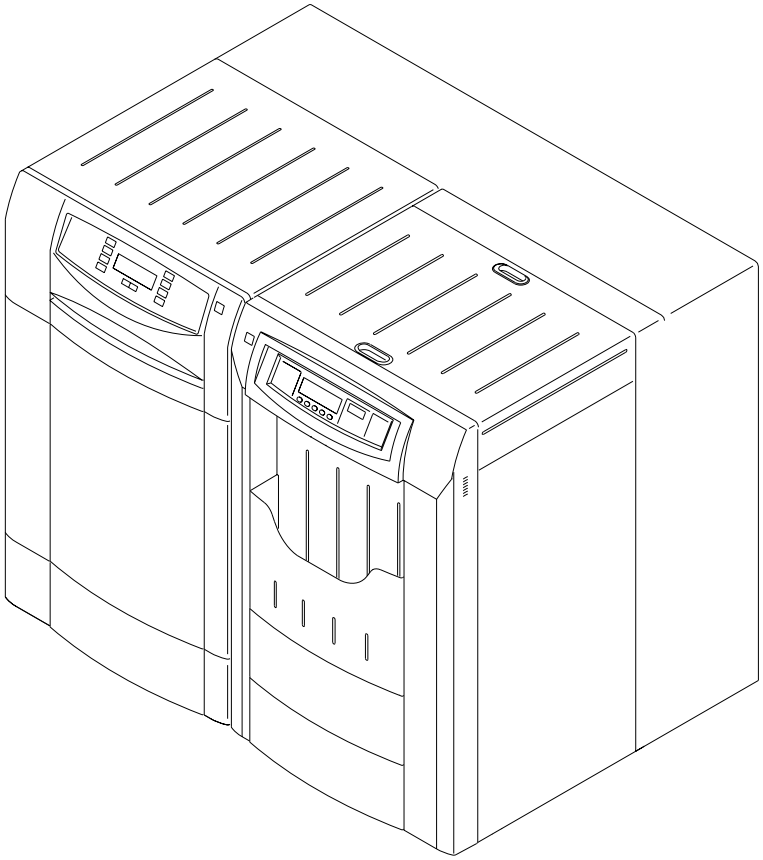

H070_0174HA

HEALTH IMAGING

© Eastman Kodak Company

PLEASE NOTE The information contained herein is based on the experience and knowledge relating to the subject matter gained by Eastman Kodak Company prior to publication.

No patent license is granted by this information.

Eastman Kodak Company reserves the right to change this information without notice, and makes no warranty, express or implied, with respect to this information. Kodak shall not be liable for any loss or damage, including consequential or special damages, resulting from any use of this information, even if loss or damage is caused by Kodak's negligence or other fault.

This equipment includes parts and assemblies sensitive to damage from electrostatic discharge. Use caution to prevent damage during all service procedures.

Table of Contents

Description	Page
Introduction	4
Catalog Numbers	5
Power Cord for the SBS Fan	6
Physical Dimensions	7
Footprints for Use in Site Planning	7
Size and Weight for the Multiloader 700 and Multiloader 700 Plus	7
Multiloader 700 Processor Interface for the 5000 RA, the 480 and 460 RA Series, or M6 Series Processors	7
Floor Loading of the Multiloader	8
Pallet Dimensions for the Multiloader 700 or 700 Plus	8
Size and Weight for the SBS Kits	9
Floor Loading of the SBS	9
Size and Weight for the SBS Kit Adapters, Crated	9
Size and Weight for the Darkroom Feed Kit, Crated	9
Space Requirements with the Multiloader 700 or 700 Plus Interfaces	10
Site Requirements	11
Electrical Requirements for the Multiloader 700 or Multiloader 700 Plus	11
Electrical Requirements for the SBS Kit	11
Electrical Requirements for the Processors	12
Room Environment — Multiloader 700 or 700 Plus and the SBS	13
Room Lighting Near the Multiloader 700 or 700 Plus and the SBS	13
Air — Multiloader 700 or 700 Plus and the SBS	13
Heat	13
Water	13
Film	14
Magazine Sizes — Multiloader 700 or 700 Plus	14
Film Storage Environment	14
Side-By-Side Kit	14
Installation	15
Equipment Dimensions	16
Multiloader 700 or 700 Plus and Side-By-Side Kit System	17
Multiloader 700 or 700 Plus and Side-By-Side Kit, Through the Wall	26
Requirements for Seismic Brackets for the Multiloaders 700 and 700 Plus	33
For the In-line Configuration	33
For the Side-By-Side Kit	33

Correct Venting Test Procedure for the Film Processor 34
Dimensions and Location of the Humidifier 36
Multiloader 700 or 700 Plus — Center of Gravity 37
Side-By-Side Kit — Center of Gravity 38

Section 1: Introduction

Note

This Site Specifications contains details for the KODAK Multiloaders 700 and 700 Plus and the Side-By-Side Kit. The KODAK Multiloader 700 Side-By-Side Kit is hereafter called SBS in this publication.

The KODAK SBS may be used only where the acceptability of the combination of the KODAK Multiloader 700 or 700 Plus and one of the following Processors is determined by Underwriters Laboratories, Inc.:

KODAK X-OMAT 5000 RA Processor

KODAK X-OMAT 480 RA Processor

KODAK X-OMAT 460 RA Processor

KODAK *RP* X-OMAT Processor, Model M6B

Caution

This equipment includes parts and assemblies sensitive to damage from electrostatic discharge. Use caution to prevent damage during all service procedures.

The Multiloader and the SBS may be installed with the Processor as either a Stand-Alone configuration or as a Through-the-Wall configuration, which uses the Darkroom Feed Tray (DFT) to allow films to be fed from the darkroom directly into the SBS and the Processor without passing through the Multiloader.

In both the Stand-Alone and Through-the-Wall configurations, the Multiloader and the Processor are side-by-side, with the choices shown below:

- **OPTION 1: the Multiloader is to the left of the Processor**.
- **OPTION 2: the Multiloader is to the right of the Processor.**

In the Stand-Alone configuration, only sheet films from the KODAK X-OMATIC and MIN-R 2 Cassettes and KODAK X-OMATIC Video Film Holders may be processed. If the Multiloader 700 Plus is installed, IR-Sensitive sheet films may be processed through it and the SBS in the Stand-Alone configuration.

In the Through-the-Wall configuration, when the DFT is used, the system can process Tri-Fold films (up to 1422 mm [56 inches] in length), roll films, and IR-Sensitive films from the darkroom. See the Processor Publications for any roll film length restrictions; always provide both feed and takeup tension for the roll film.

Catalog Numbers

Catalog Number	Product Name
716 5806	KODAK Multiloader 700 Plus, 60 Hz
716 5798	KODAK Multiloader 700 Plus, 50 Hz
716 8974	KODAK Multiloaders 700 and 700 Plus Side-By-Side Kit / 5000 RA / ML - Left
716 8982	KODAK Multiloaders 700 and 700 Plus Side-By-Side Kit / 5000 RA / ML - Right
715 2721	KODAK Multiloader 700 Side-By-Side Kit / ML - Left
715 2739	KODAK Multiloader 700 Side-By-Side Kit / ML - Right

Catalog Numbers for In-line Configurations

	Multiloader 700	Multiloader 700 Plus
5000 RA		
Interface	*708 6663	716 8966
Processor Ready Kit	711 9837	711 9837
* There will be a 14 mm (0.6 in.) gap between the 5000 RA and the Interface Infill Panels of the Multiloader 700.		
480 RA		
Interface	708 6663	716 8958
Processor Ready Kit	711 9837	711 9837
M6B		
Interface	708 6663	716 8958
Processor Ready Kit	709 4865	709 4865
M6AW		
Interface	708 6663	716 8958
Processor Ready Kit	709 4873	709 4873
M8		
Interface	708 6663	716 8958
Processor Ready Kit	709 4881	709 4881

Catalog Numbers for SBS Configurations

	Multiloader 700		Multiloader 700 Plus	
	Multiloader 700 / Left	**Multiloader 700 / Right**	**Multiloader 700 Plus / Left**	**Multiloader 700 Plus / Right**
Dark Room Feed Option	715 3521	715 3521	715 3521	715 3521
5000 RA				
Side-By-Side Kit / 5000 RA	716 8974	716 8982	716 8974	716 8982
Processor Ready Kit	Not Required		Not Required	
Processor Start Kit	Not Required		Not Required	
460 / 480 RA				
Side-By-Side Kit	715 2721	715 2739	715 2721	715 2739
Processor Ready Kit	Not Required		Not Required	
Processor Start Cable	Not Required		Not Required	
M6B				
Side-By-Side Kit	715 2721	715 2739	715 2721	715 2739
Processor Ready Kit	709 4865	709 4865	709 4865	709 4865
M6AW				
Side-By-Side Kit	Not Available		Not Available	
M8				
Side-By-Side Kit	Not Available		Not Available	

Power Cord for the SBS Fan

The SBS does not supply a Power Cord because of the difficulty in meeting the various requirements in different countries. Power Cords available from Kodak are listed below, and must be provided separately. The Power Cord connects to a fused IEC receptacle on the SBS.

- USA/Canada/Mexico — either Part Number 616289 or Catalog Number 704 6188
- Switzerland — Catalog Number 704 6170
- Italy/France — Catalog Number 704 6162
- United Kingdom/Ireland — Catalog Number 704 5727
- Remainder of Europe — Catalog Number 704 6378

Section 2: Physical Dimensions

Footprints for Use in Site Planning

The Footprints listed below should be used for site planning. They include location and information on the Seismic Brackets (for the Side-By-Side Kit, also see Figure 23 on Page 33).

Multiloader 700, Part No. XP3053-1 (in-line configuration)

Multiloaders 700 and 700 Plus with the Side-By-Side Kit, Part No. XP3053-4

Size and Weight for the Multiloader 700 and Multiloader 700 Plus

Multiloader 700	Multiloader 700 Plus
Crated (With Pallet)	
• Height: 146 cm (58 in.) • Width: 96 cm (38 in.) • Depth: 91 cm (36 in.) • Weight: 320 kg (703 lb)	• Height: 146 cm (58 in.) • Width: 96 cm (38 in.) • Depth: 91 cm (36 in.) • Weight: 300kg (660 lb)
Uncrated (see Figures 4 and 5)	
• Height: 125 cm (49.2 in.) Includes Adjustable Casters • Width: 78.7 cm (31 in.) • Depth: 71.1 cm (28 in.) • Weight: – With Interface and empty magazines: 292 kg (644 lb) – With Interface and full magazines: 327 kg (721 lb)	• Height: 125 cm (49.2 in.) Includes Adjustable Casters • Width: 78.7 cm (31 in.) • Depth: 71.1 cm (28 in.) • Weight: – With Interface and empty magazines: 272 kg (598 lb) – With Interface and full magazines: 307 kg (675.4 lb)

Multiloader 700 Processor Interface for the 5000 RA, the 480 and 460 RA Series, or M6 Series Processors

The Processor Interface is in a separate package, not on the pallet.

Crated

- Weight: 29 kg (64 lb)

Uncrated

- Height: 28 cm (11 in.)
- Width: 77.5 cm (30.5 in.)
- Depth: 29.8 cm (11.75 in.)
- Weight: 15 kg (33 lb)

Floor Loading of the Multiloader

The Multiloader sits on 3 pads that are 5 cm (2 in.) in diameter. The maximum floor loading will be approximately 5.6 kg/sq cm (78.7 lb/sq in.). See Figures 3 and 4 on Page 16.

Figure 1 **Pallet Dimensions**

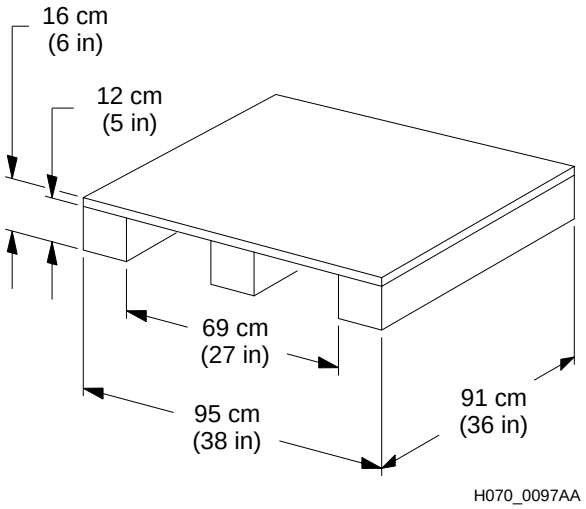

The pallet is accessible on all 4 sides when the corrugated cover is removed. It has a 5 cm (2.0 in.) guard rail on 3 sides and a ramp on the fourth side. The ramp is used to remove the Multiloader from the pallet. The pallet is a disposable type which does not have to be returned.

Pallet Dimensions for the Multiloader 700 or 700 Plus

- Height: 16 cm (6 in.)
- Width: 95 cm (38 in.)
- Depth: 91 cm (36 in.)

Fork-Lift Truck Clearance:

- Width: 69 cm (27 in.)
- Height: 12 cm (5 in.)
- Depth: 91 cm (36 in.)

Size and Weight for the SBS Kits

Crated

- Height: 75 cm (29.5 in.)
- Width: 80 cm (31.5 in.)
- Length: 167 cm (65.7 in.)
- Weight: 142 kg (313 lb)

Uncrated

- Height: 60 cm (23.6 in.)
- Width: 74 cm (29.1 in.)
- Depth: 167 cm (65.7 in.)
- Weight: 93 kg (205 lb)

Note

For ease of transportation, the SBS box is mounted onto a standard EUROPE_Pallet.

Floor Loading of the SBS

The SBS has 3 adjustable support legs. The floor loading will be approximately 6.1 kg/sq cm (87 lb/sq. in.).

Size and Weight for the SBS Kit Adapters, Crated

480 Adapter	5000 RA Adapter
• Height: 35 cm (14 in.)	• Height: 35 cm (14 in.)
• Width: 22 cm (8.7 in.)	• Width: 22 cm (8.7 in.)
• Length: 81 cm (31.9 in.)	• Length: 81 cm (31.9 in.)
• Weight: 17.2 kg (38.0 lb)	• Weight: 14.2 kg (31.2 lb)

Size and Weight for the Darkroom Feed Kit, Crated

- Height: 22 cm (8.7 in.)
- Width: 40 cm (15.7 in.)
- Length: 55 cm (21.7 in.)
- Weight: 6 kg (13.0 lb)

Section 3: Space Requirements with the Multiloader 700 or 700 Plus Interfaces

Figure 2 **Plan View Showing Clearances of the KODAK Multiloader 700 or 700 Plus with the following Processors: 5000 RA, M6B, 480 RA, and 460 RA**

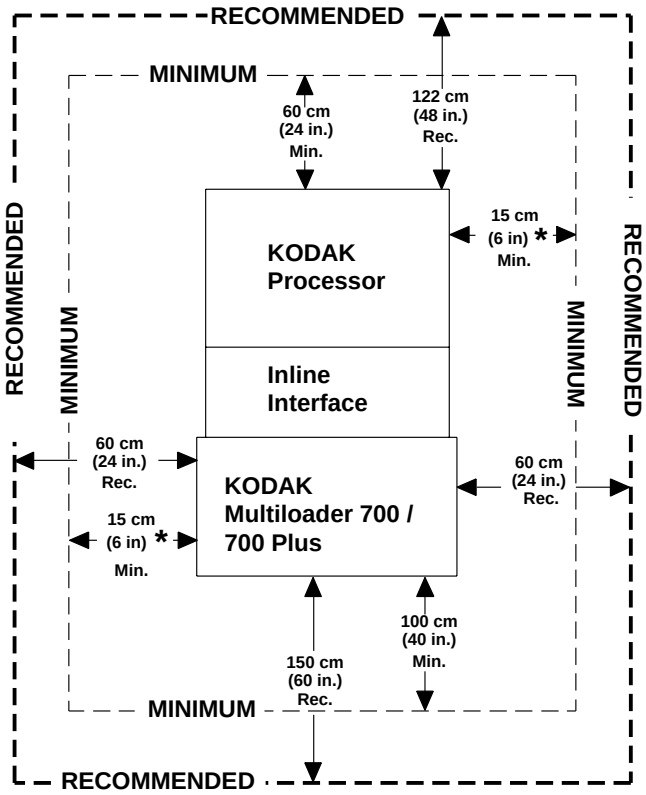

*** Where space is limited, provide a minimum clearance of 15 cm(6 in.) on either the right or left side of the KODAK Multiloader 700 / 700 Plus. This minimum clearance preferably should be on the non-drive side of the processor.**

The recommended clearances are necessary for proper operation and service.

Use of the minimum clearances may reduce the effectiveness of the operation and/or impede service.

Clearances above the equipment are not labelled on the drawing. Please refer to the table on this page.

H070_9000CC

The Multiloaders 700 and 700 Plus are on casters and have a disconnect lever which can be located on the accessible side of the Interface. These in-line features enable it to be conveniently disconnected and moved away from the Processor, thus providing additional service access when it is required.

Recommended and Minimum Clearances (See Figure 2)

Multiloader	Minimum	Recommended
Feed End	100 cm (40 in.)	150 cm (60 in.)
Left Side	15 cm (6 in.) one side only*	60 cm (24 in.)
Right Side	15 cm (6 in.) one side only*	60 cm (24 in.)
Processor Dryer Side	60 cm (24 in.)	122 cm (48 in.)
Top	92 cm (36 in.)	
Bottom	Nothing may be located under the Multiloader 700 or 700 Plus	

Section 4: Site Requirements

Electrical Requirements for the Multiloader 700 or Multiloader 700 Plus

A. 190 to 250 VAC, 10 A, single-phase, 2-wire with earth ground, 60 Hz service is recommended. For 60 Hz units, the power cord provided terminates in a NEMA 6 - 15 P plug. If this power cord is not used, the replacement power cord should be a flexible wire of at least 185 cm (6 ft.) in order to provide adequate service access. A 50 Hz version of the Multiloader 700 and Multiloader 700 Plus is available for countries where 50 Hz service is required.

B. A dedicated main power disconnect switch, consisting of a 2-pole, 10 A, thermomagnetic circuit breaker or fused disconnect must be provided in close proximity to the unit. (The Processor requires a separate main power disconnect switch.) The wall-mounted main power disconnect switch is not furnished.

C. The electrical interface connection between the Multiloader and the Processor is a flexible conduit of 122 cm (48 in.) in length, in order to provide adequate service access.

D. The Multiloader 700 and Multiloader 700 Plus comply with FCC Rules and Regulations, Part 15, Subpart J, Class A equipment, VDE specifications 0875/6.77 and 0871/6.78 EEC Directive 76/889. The units are UL listed and CSA certified.

E. All electrical services, including earth ground, must comply with local and national electrical regulations.

Electrical Requirements for the SBS Kit

A. The Fan in the SBS receives its power from a wall outlet. The Fan must run 24 hours a day to protect the SBS against corrosion. One of the following services is required:

- 50/60 Hz Single Phase
- 100 V 1.5 A
- 220 V 0.75 A
- 230 V 0.75 A
- 240 V 0.75 A
- 60 Hz Single Phase
- 120 V 1.5 A
- 240 V 0.75 A

B. If the electrical connection of the SBS Fan is hardwired, a Main Power Switch consisting of a 2-pole switch with a solid neutral and common trip must be:

- Located on a wall adjacent to the SBS
- Easily accessible
- Visible from outside the darkroom

C. The SBS meets the following standards:

- UL 122 “Standard for Photographic Equipment”
- EN 60950
- CSA Standard C22.2 NO. 950-M89
- FDA Good Manufacturing Practices
- United Kingdom Green Guide
- KAD Test Specifications TS 212 (ATP 593) TS 215 (ATP588) TS217 (ATP590)
- Kodak Normen (KN’s) 1.50.04; 2.90.10; 2.90.64; 2.90.80
- Electro Magnetic Compatibility (EMC)
- Electro Magnetic Interference (EM)

- EEC Directive 89/336
- EN 55022 Klasse B
- EN 55014
- FCC CFR 47 Part 15 Subpart J
- EN 50081-1
- Postverfuegung 243/1991
- Australia Standard AS 1044 and AS 3548
- Canadian DOC C108.8-M 1983 Class B
- VCCI Standard 11/1987 Class 2
- Electromagnetic Susceptibility (EMS)

D. All electrical services, including earth ground, must comply with local and national electrical regulations.

Electrical Requirements for the Processors

A. Ensure that the electrical connections to the main power for the following equipment is as stated in the Site Specifications shown:

- Multiloader 700 and Multiloader 700 Plus Site Specifications, Publication No. 8B7005, November 1995
- KODAK X-OMAT 5000 RA Processor, Site Specifications Part No. 5B6338 dated 11/95
- KODAK *RP* X-OMAT Processor, Model M6B, Site Specifications Part No. 1C7070 dated 5/94
- KODAK X-OMAT 480 RA Processor, Site Specifications Part No. 1C7064 dated 4/94
- KODAK X-OMAT 460 RA Processor, Site Specifications Part No. 636737 dated 1/91
- KODAK *RP* X-OMAT Processor, Model M6AW, Suggested Room Layout, Service Requirements and Connections, Part No. 668082 dated 4/82

Room Environment — Multiloader 700 or 700 Plus and the SBS

	Limits	Recommended
Temperature	15 - 27°C (59 - 80°F)	18 - 24°C (65 - 75°F)
Relative Humidity	15 - 70%	30 - 60%

Note

Temperature and Relative Humidity: Problems may be encountered if the temperature and relative humidity are beyond recommended values. Prolonged exposure to relative humidity outside the recommended range may cause the film to double feed or to jam in a supply magazine.

Room Lighting Near the Multiloader 700 or 700 Plus and the SBS

The Multiloader 700 or 700 Plus and the SBS can be operated in normal room lighting of approximately 650 lux (60 footcandles). Light levels may be as high as 2150 lux (200 footcandles) over the top surface of the Multiloader.

Air — Multiloader 700 or 700 Plus and the SBS

Multiloaders 700 and 700 Plus

Approximately 100 cubic metres/hr (3530 cubic feet/hr) of air enter the Multiloader and are exhausted through vents in the unit, so that no exhaust hose is needed.

The Processor gives off heat and must be properly ventilated (see Figures 24 and 25 for the correct venting procedure). If the exhaust from the Processor does not meet the Site Specifications, corrosion of parts and electrical malfunctions will appear in the Multiloader 700 or 700 Plus.

Adequate airflow around both units must be provided.

Side-By-Side Kits

The SBS needs no connection to the air conditioning. The purpose of the installed Fan is to raise the inside pressure of the SBS to purge chemical fumes from the SBS.

Heat

Multiloaders 700 and 700 Plus

Approximately 540 kJ/hour (512 BTU/hour) in standby mode, with a maximum of 1660 kJ/hour (1574 BTU/hour) are generated by the Multiloader 700 or 700 Plus alone. A portion is dissipated through the Processor, and is vented through the Processor's exhaust, not into the room. For heat generated by the Processor, see the site specification for the Processor model being used.

Side-By-Side Kits

46 kJ/hour (44 BTU/hour)

Water

Multiloaders 700 and 700 Plus

To install the Humidifier, the water pressure should be within the limits of 25 - 65 psi (1.8 - 4.6 bar).

Side-By-Side Kits

There are no requirements.

Section 5: Film

Magazine Sizes — Multiloader 700 or 700 Plus

The Multiloaders 700 and 700 Plus hold 7 film magazines, which are available in the sizes shown below. All magazines can be resized and relabelled.

35 x 43 cm	35 x 35 cm
30 x 40 cm	30 x 35 cm
24 x 30 cm	24 x 24 cm
20 x 40 cm	18 x 43 cm
18 x 24 cm	8 x 10 in.
10 x 12 in.	11 x 14 in.

Note

The film magazines must be loaded with film under safelight conditions. Sizes 20 x 40 cm, 30 x 40 cm, 8 x 10 in., 10 x 12 in. and 11 x 14 in. may not be available in all countries.

Film Storage Environment

	Recommended Range
Temperature	10 - 21°C (50 - 70°F)
Relative Humidity (Opened packages)	30 - 50%

Side-By-Side Kit

All sheet films which may be used with the Multiloaders 700 and 700 Plus may also be used with the SBS. In addition, the SBS can accept 10 x 10 cm (4 x 4 in.) films, Tri-Fold films (up to 56 inches in length) and roll films through the Darkroom Feed Kit (DFT), if installed.

Infrared-sensitive films cannot be processed through the Multiloader 700 but may be safely processed through the Multiloader 700 Plus and through the DFT directly into the Processor.

Section 6: Installation

A. The site must be properly prepared before the Multiloader 700 or 700 Plus and the Side-By-Side Kit are installed.

B. The Multiloader 700 or 700 Plus will interface in-line with X-OMAT Processors, Models 5000 RA, 460 RA, 480 RA, M6B, and M8. The Processor must be properly installed with its leveling feet before installing the Multiloader. The Processor's connections must not interfere with proper Multiloader installation. For clearances between the Processor and the back of the Multiloader, see Figures 9, 15, and 26.

C. The Multiloader 700 with the SBS will work with the X-OMAT Processors, Models 5000 RA, M6B, 460 RA, and 480 RA.

- For a Stand-Alone configuration, the Processor must be properly installed with its leveling feet before installing the Multiloader 700 or 700 Plus with the SBS.
- For a Through-the-Wall configuration, the opening through the wall must be prepared and the Side-By-Side Kit mounted to it before the installation of the Processor can proceed. The Processor must be properly installed with its leveling feet and then bolted to the SBS before installing the Multiloader 700 or 700 Plus.
  All materials (plywood panels, etc) required to close openings in the darkroom wall must be provided locally.

D. The Multiloaders 700 and 700 Plus are designed to accept KODAK X-OMATIC Cassettes, KODAK MIN-R 2 Cassettes, and KODAK X-OMATIC Video Film Holders. Type II Cassettes require a reflective sticker placed on the outside cassette surface. All Cassettes except the KODAK X-OMATIC Video Film Holders require a reflective sticker placed on both top and bottom intensifying screens. See the Operating Instructions for details.

E. A Kodak Account Manager, a Kodak Imagewatch dealer service provider, or a Kodak Customer Equipment Services Field Engineer (FE) will visit the premises during normal working hours to inspect the site where the equipment is to be installed. At that time, it will be determined whether the site has been prepared properly for equipment installation. The customer will be notified of any areas that require further preparation.

F. If local labor regulations permit, installation of the Multiloader 700 or 700 Plus will be performed by the dealer service provider or the FE. At installations where this is not possible, installation charges are the responsibility of the customer. A dealer service provider or FE will be on site to provide assistance, if required.

Section 7: Equipment Dimensions

The Multiloader 700 or 700 Plus and Processor with the Interfaces

Figure 3 **KODAK Multiloader 700 with the Interface - Elevation and Plan Views**

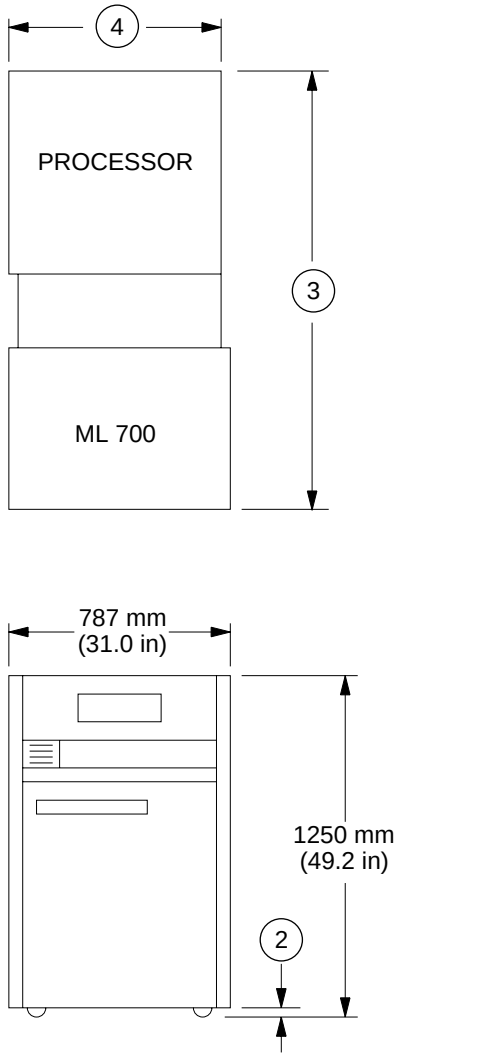

[1] The Processor has 4 leveling feet with 5 cm (2 in.) diameter pads. Height adjustment is approximately 1 to 5 cm (1/2 to 2 in.). See Figure 4.

[2] The Multiloaders 700 and 700 Plus have 3 casters and 3 leveling feet, all height-adjustable. Adjust the casters to level the Multiloader and align it to the Processor. Adjustment of the casters is approximately 1 to 3 cm (1/2 to 1 1/4 in.). The leveling feet have 5 cm (2 in.) diameter pads and may be adjusted approximately 1 to 2.5 cm (1/2 to 1 in.). After the Multiloader and the Processor are leveled and aligned, the leveling feet should be lowered to take the weight off the casters. See Figures 3 and 4 for the in-line Interface configuration and Figures 9 through 17 for the SBS configurations.

[3] Overall length varies with the Processor being used. The following table lists overall length by Processor. (See item number 3, in Figures 3 and 4).

M6 Series	460 RA/480 RA	5000 RA
163 cm (64 in.)	168 cm (66 in.)	172 cm (67.8 in.)

[4] Processor Dryer Side width for the Processor varies from 76 cm (30.0 in.) to 76.7 cm (30.2 in.).

[5] A Cassette protrudes up to approximately 5 cm (2 in.). See Figure 4, item number 5.

Figure 4 **KODAK Multiloader 700 or 700 Plus with the Interfaces - Elevation Views**

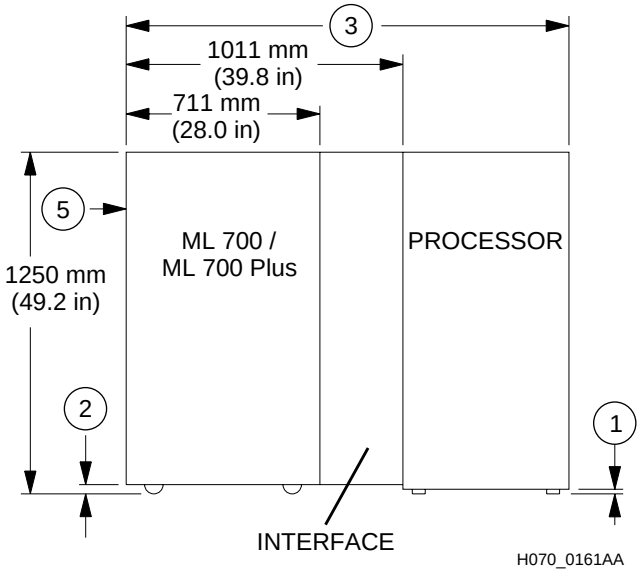

Section 8: Multiloader 700 or 700 Plus and Side-By-Side Kit System

General Information

The Multiloader 700 or 700 Plus, SBS, and Processor can be installed in 2 basic modes:

- Stand-Alone (without access from a darkroom)
- Through-the-Wall (with access from a darkroom by means of the Darkroom Feed Kit)

Note

Clearances for service access are shown in Figures 5 and 6 for the Through-the-Wall option. These clearances are the same for the Stand-Alone model except that the **E** dimension is from the back of the SBS Kit instead of from the Darkroom Feed Kit. The Darkroom Feed Kit is hereafter called DFT in this publication.

Both of these options can be installed in 2 configurations:

- Multiloaders 700 and 700 Plus to the left of the Processor (Option 1 of Figure 5)
- Multiloaders 700 and 700 Plus to the right of the Processor (Option 2 of Figure 6)

The overall dimensions of the SBS are shown in Figure 7.

Detailed dimensions of both options for the SBS System and the Processors are shown in Figures 9 through 17:

Model	Side View	Top View	
		ML Left	ML Right
M6B	Figure 9	Figure 10	Figure 11
460 RA & 480 RA	Figure 12	Figure 13	Figure 14
5000 RA	Figure 15	Figure 16	Figure 17

If it is necessary to penetrate the darkroom wall with the plumbing and dryer exhaust connections, the Seal Plate (Figure 8) should be used. It is a steel plate which has a layer of opaque foam rubber covering the holes in it in order to stay lighttight through the darkroom wall. The location and dimensions of the openings for the Seal Plate in the darkroom wall are shown in the following figures:

- Figures 18, 19, and 20 — Installations which do not include an in-line silver recovery device
- Figures 21 and 22 — Installations which include an in-line silver recovery device

Caution

The dryer exhaust in the Processor and the SBS Fan must be on for 24 hours a day to keep chemical fumes out of the SBS.

Figure 5 **Clearances for Service Access**

OPTION 1

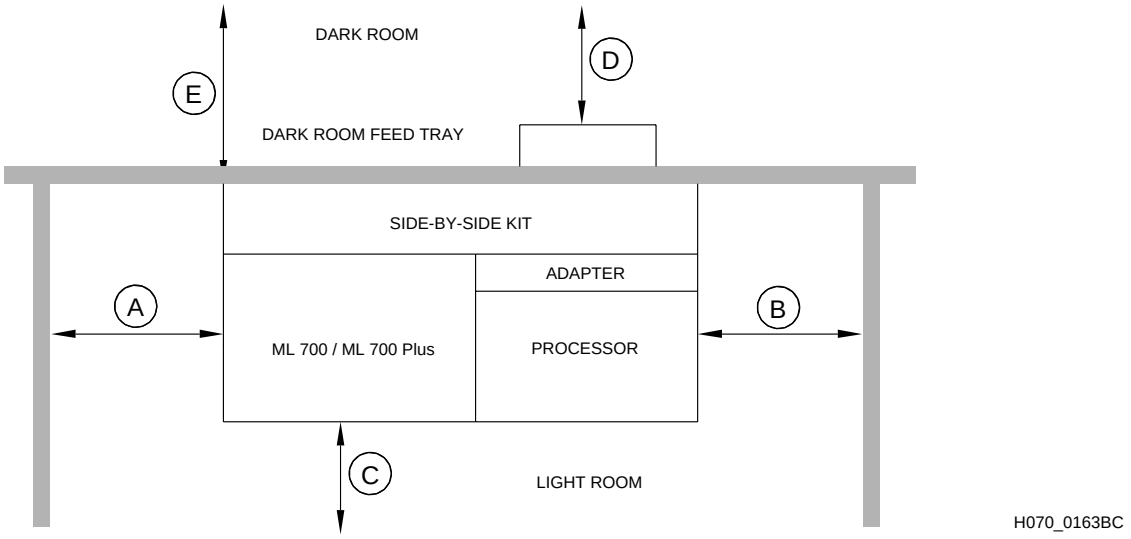

Figure 6 **Clearances for Service Access**

OPTION 2

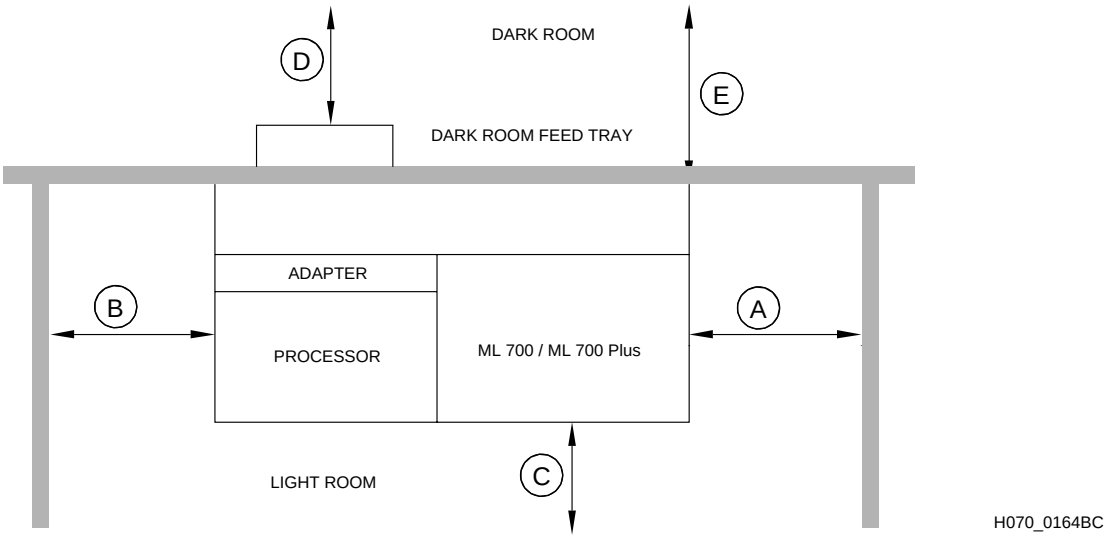

Multiloader 700 or 700 Plus SBS Kit (See Figures 5 and 6)

A	Multiloader 700 or 700 Plus to Wall	15 cm (6 in.)
B	Processor to Wall	91 cm (35 in.)*
C	Feed End, Multiloader 700 or 700 Plus	120 cm (47 in.)
D	Operator Access to Feed Films into DFT, if Installed	91 cm (35 in.)
E	Service Access behind SBS, in Stand-Alone Installation	91 cm (35 in.)

*If the Processor is placed next to a side wall, a door in the side wall may be required for service access.

Figure 7 **Side-By-Side Kit Footprint**

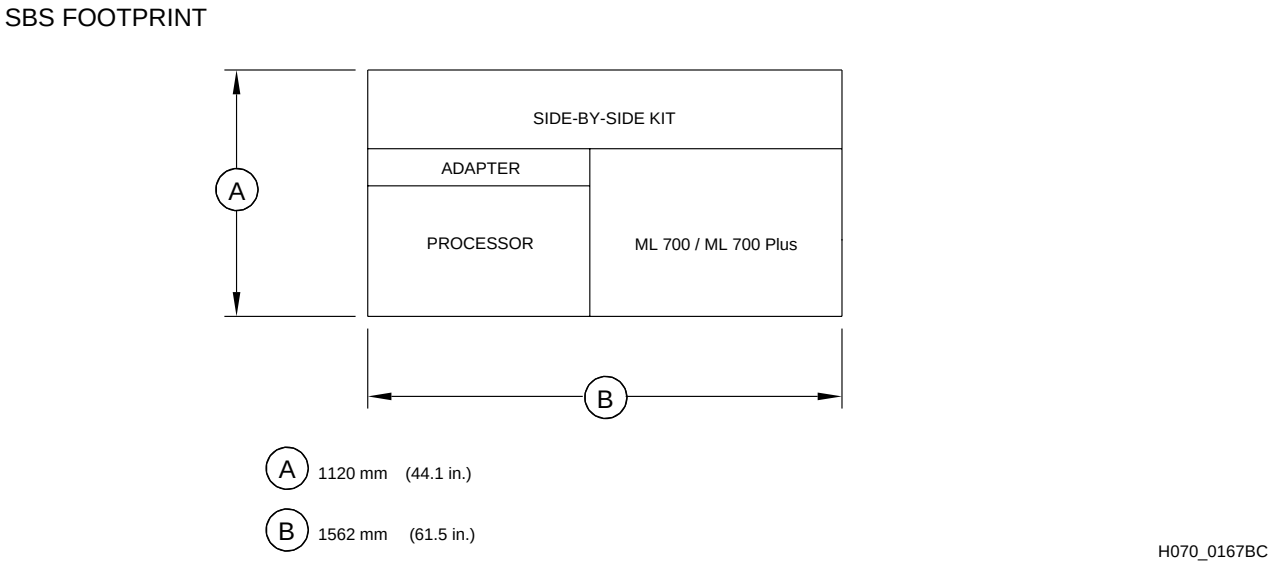

Figure 8 **Seal Plate with an Opening for a 76 mm (3 in.) Diameter Exhaust Hose**

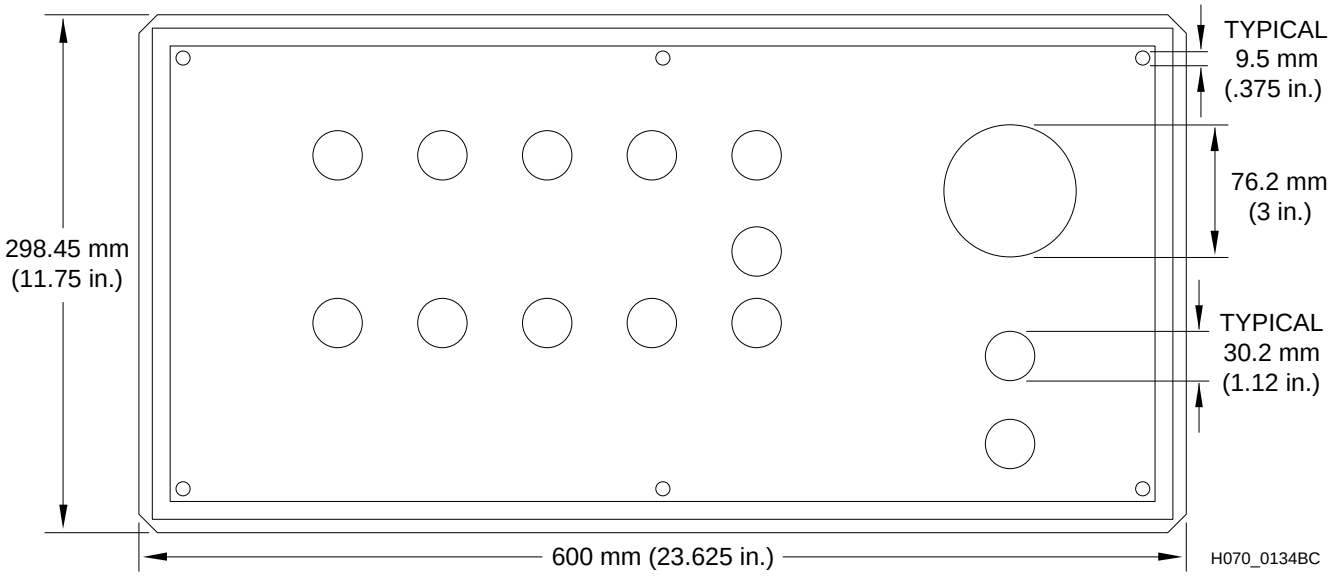

Figure 9 **Multiloader 700 or 700 Plus with a Side-By-Side Kit on a M6B Processor — Side View**

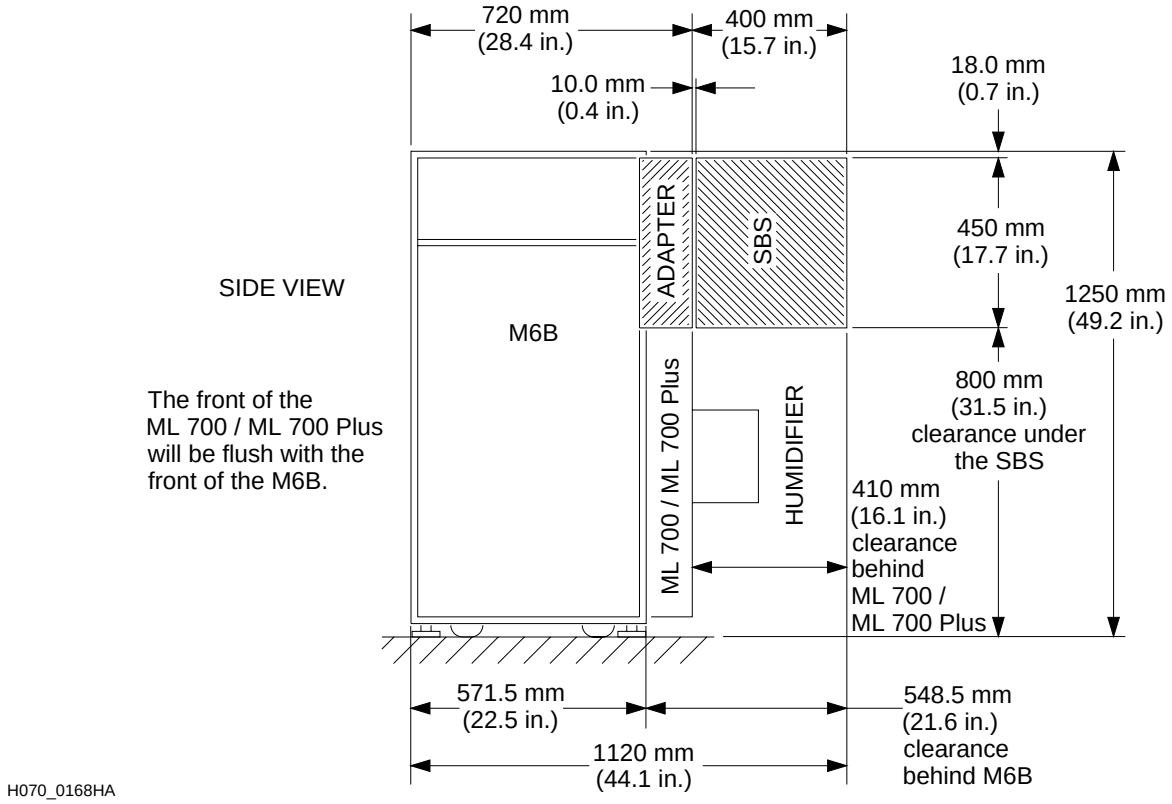

Figure 10 **Multiloader 700 or 700 Plus with a Side-By-Side Kit on an M6B Processor — Top View, Multiloader on the Left (Option 1)**

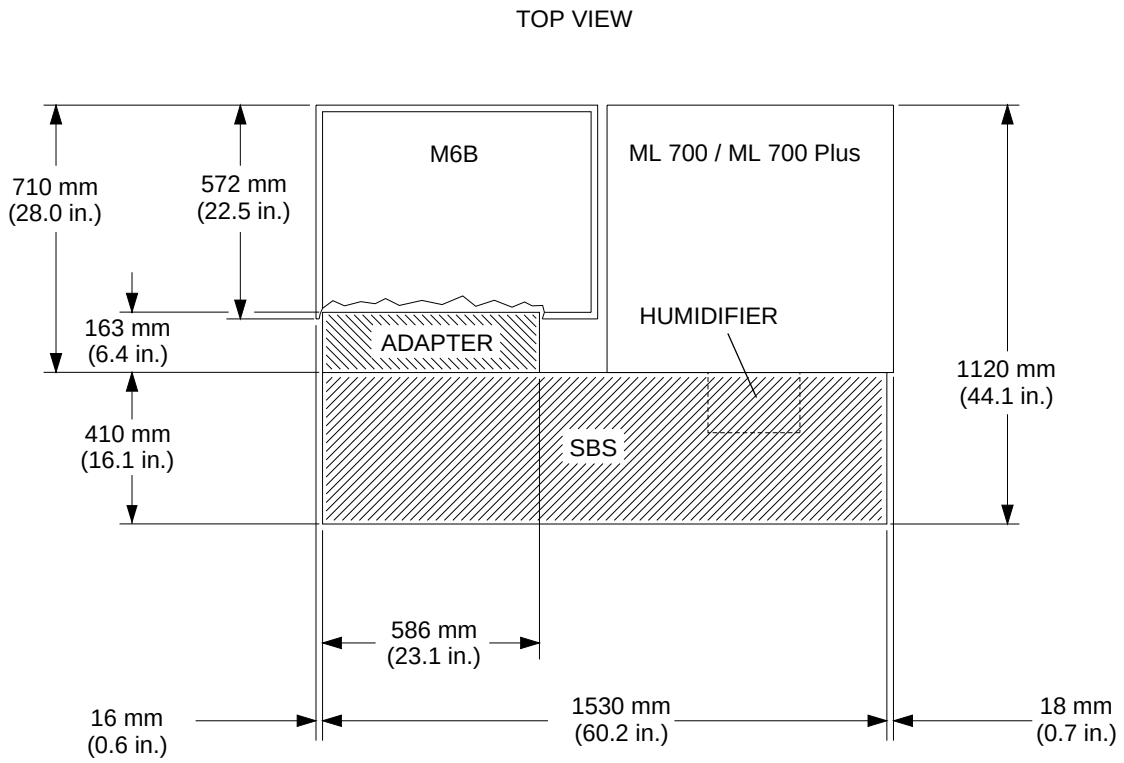

H070_0172HA

Figure 11 **Multiloader 700 or 700 Plus with a Side-By-Side Kit on an M6B Processor — Top View, Multiloader on the Right (Option 2)**

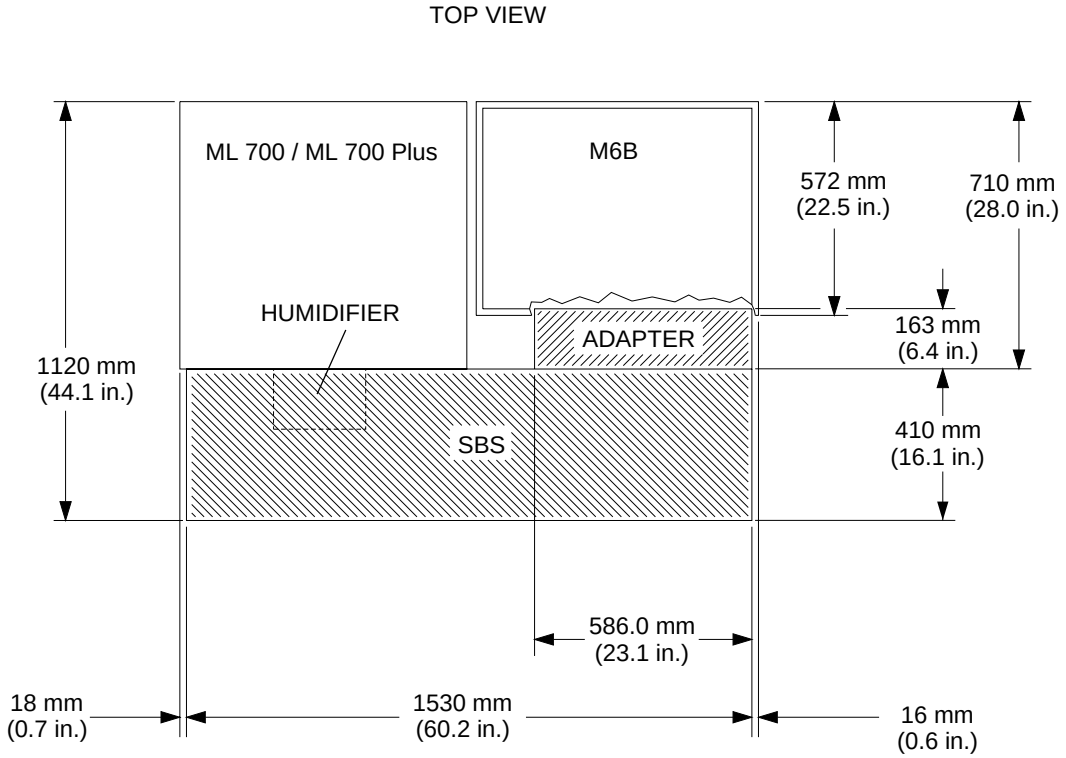

H070_0173HA

Figure 12 **Multiloader 700 or 700 Plus with a Side-By-Side Kit on a 480 RA or 460 RA Processor — Side View**

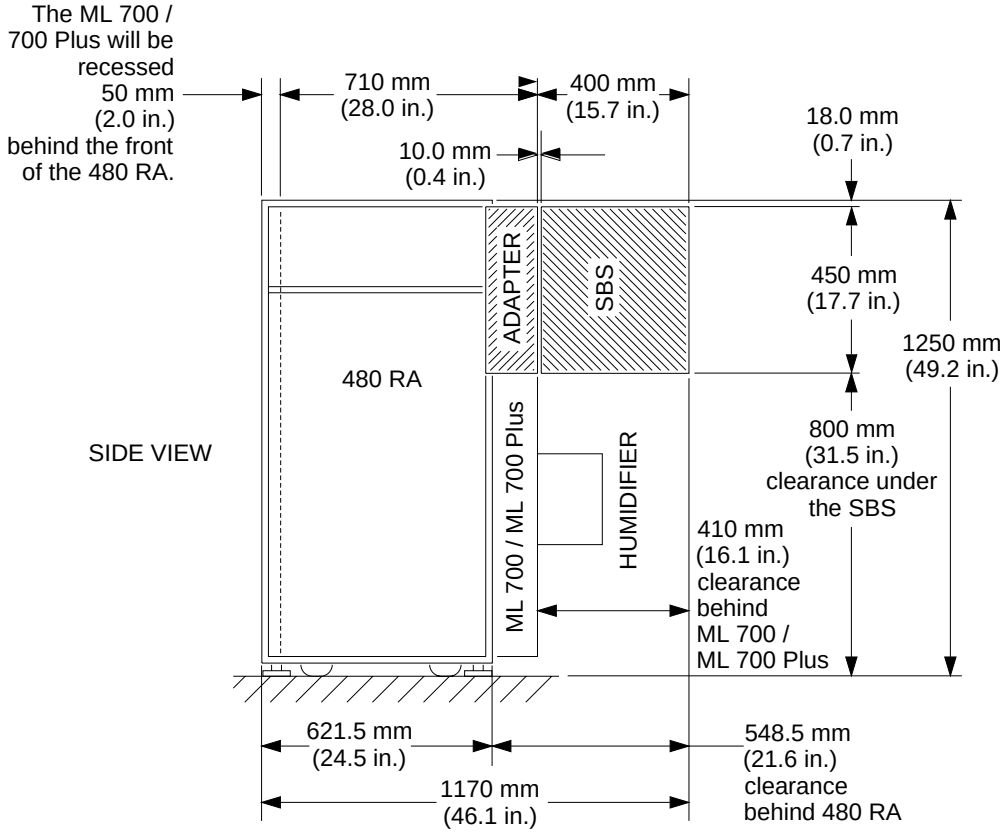

Figure 13 **Multiloader 700 or 700 Plus with a Side-By-Side Kit on a 480 RA or 460 RA Processor — Top View, Multiloader on the Left (Option 1)**

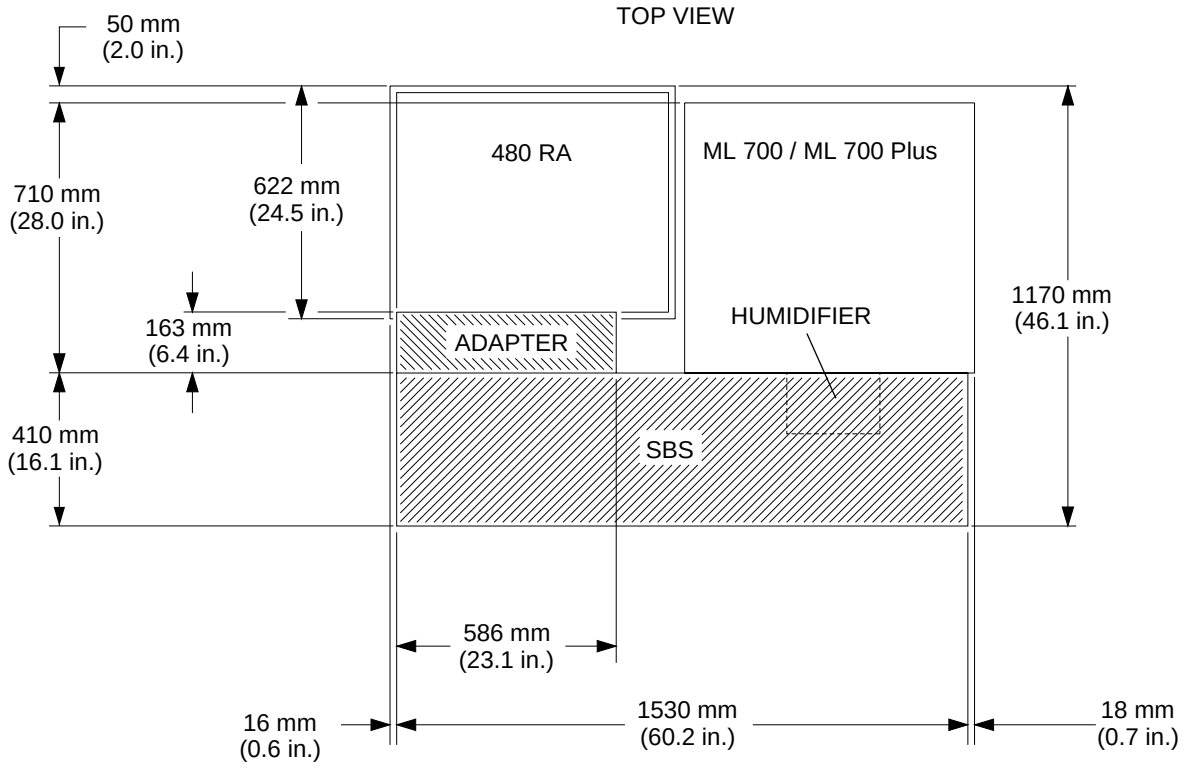

H070_0169HA

Figure 14 **Multiloader 700 or 700 Plus with a Side-By-Side Kit on a 480 RA or 460 RA Processor — Top View, Multiloader on the Right (Option 2)**

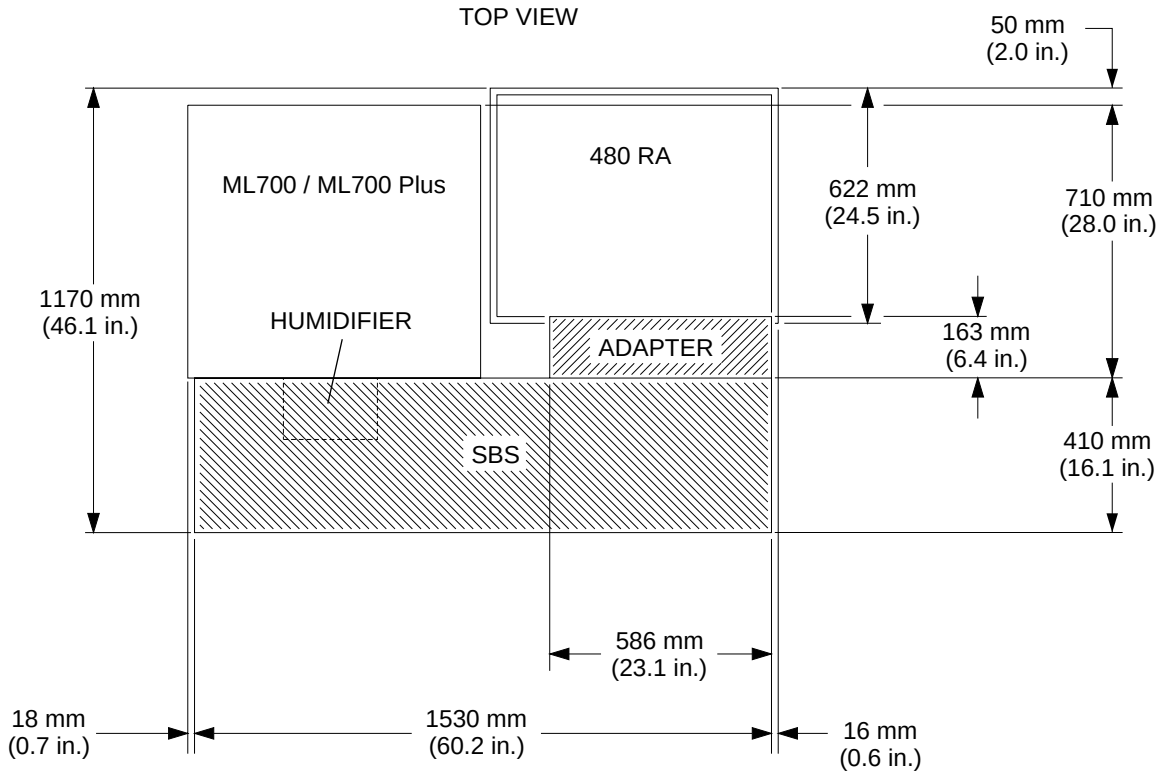

H070_0162HA

Figure 15 **Multiloader 700 Plus with a Side-By-Side Kit on a 5000 RA Processor — Side View**

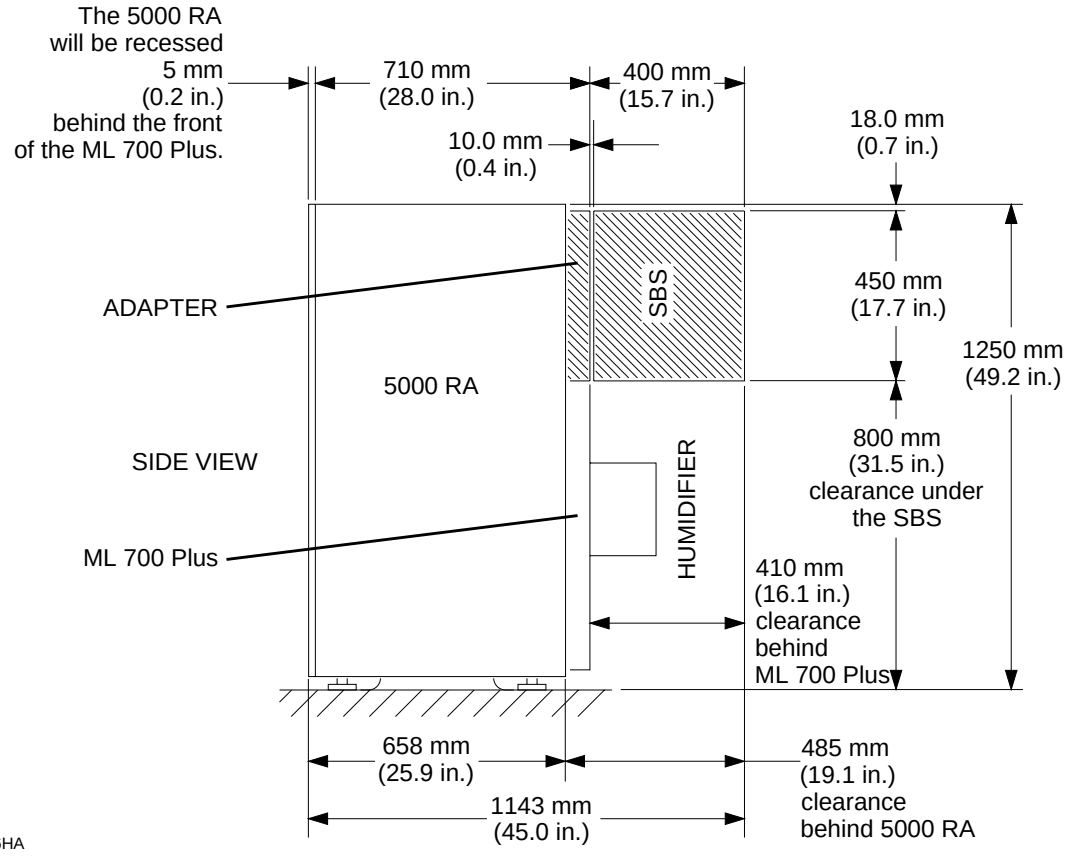

Figure 16 **Multiloader 700 Plus with a Side-By-Side Kit on a 5000 RA Processor — Top View, Multiloader on the Left (Option 1)**

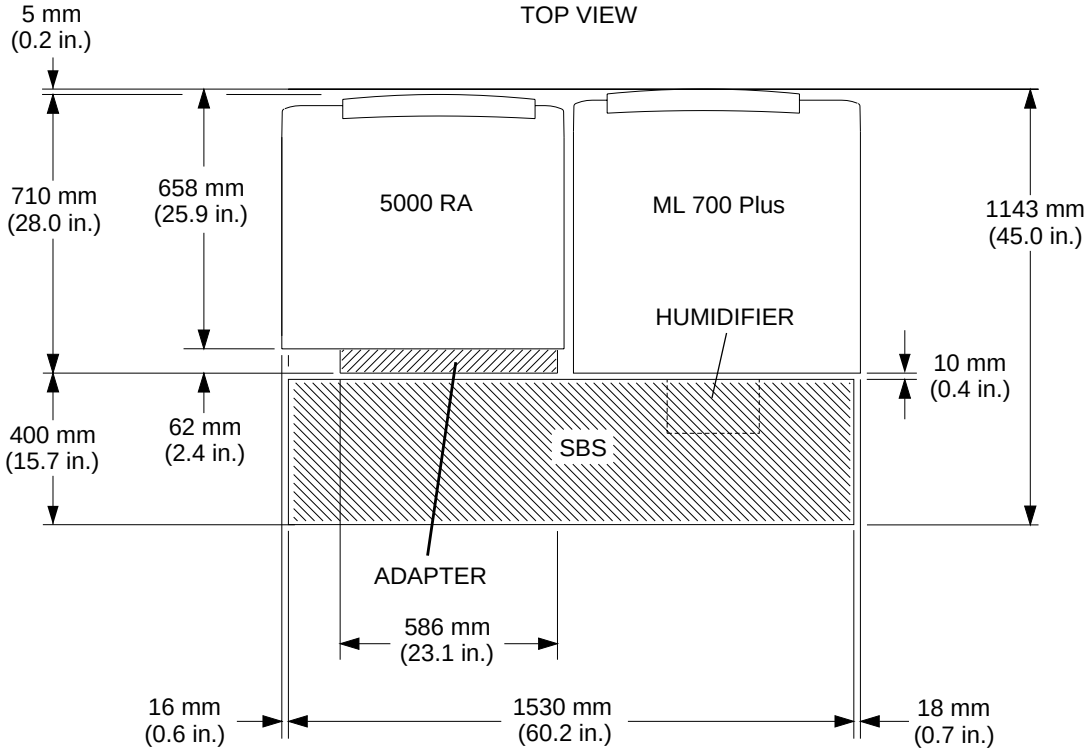

H070_0171HA

Figure 17 **Multiloader 700 Plus with a Side-By-Side Kit on a 5000 RA Processor — Top View, Multiloader on the Right (Option 2)**

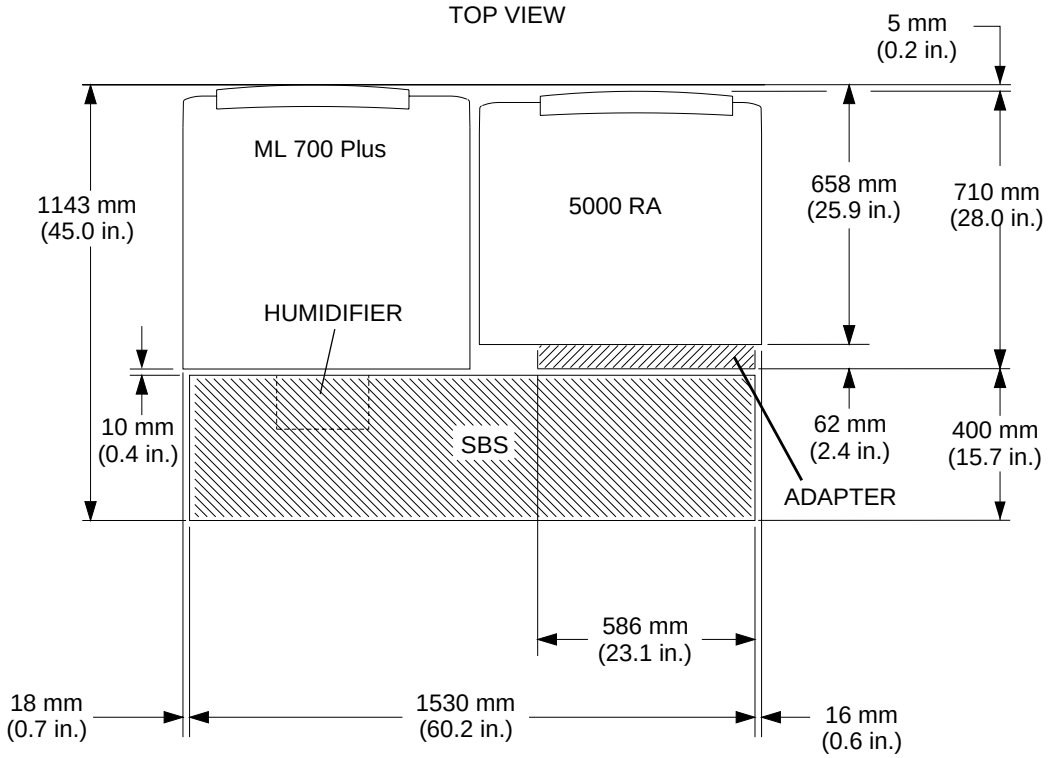

H070_0170HA

Section 9: Multiloader 700 or 700 Plus and Side-By-Side Kit, Through the Wall

The Through-the-Wall installation is of 2 basic types:

Solid Darkroom Wall

- The Darkroom wall has no large processor-sized openings to be closed up, and will be modified to allow the DFT and, if needed, the Processor connections to penetrate it. See Figure 18 for details of this installation.

Note

All materials (plywood panels, etc) required to close openings in the darkroom wall must be provided locally.

Processor Opening in Darkroom Wall

- There was a Processor mounted in the wall of the Darkroom, and when the Processor was removed and installed with the Multiloader 700 or 700 Plus and SBS Kit, there remained a large opening in the Darkroom wall. See Figures 19 and 20 for details of this installation when there is no in-line silver recovery device and Figures 21 and 22 when there is an in-line silver recovery device.

Solid Darkroom Wall

The solid darkroom wall must have an opening for the DFT and might need an opening for the Seal Plate (which allows plumbing and dryer exhaust connections through the darkroom wall). See Figure 8.

The locations and dimensions of wall openings shown in Figure 18 and in the list below are the same whether the installation is Option 1 or Option 2 (the openings must always line-up with the Processor):

A. 40 mm (1.6 in.) — locates the left end of the DFT opening with respect to the outside edge of the Processor frame.

B. 550 mm (21.6 in.) — length of the wall opening for the DFT.

C. 150 mm (6.0 in.) — locates the right end of the DFT opening with respect to the outside edge of the Processor frame.

D. 1030 mm (40.6 in.) — locates the bottom of the DFT opening above the floor.

E. 1210 mm (47.8 in.) — locates the top of the minimum opening for the DFT above the floor.

Note

This larger opening is needed if the Cover of the DFT is to be lifted up to the vertical position. A small plywood panel is needed to make this opening lighttight. See the inset drawing in the top of Figure 18.

F. 1550 mm (61.0 in.) — locates the top of the largest opening for the DFT above the floor.

Note

Dimensions G and H locate the Seal Plate for an installation without an in-line silver recovery device. The change to location and orientation of the Seal Plate for an installation with an in-line silver recovery device is shown in Figures 21 and 22.

G. 220 mm (8.7 in.) — locates the bottom of the opening for the Seal Plate (if used) above the floor. (The dimensions of the Seal Plate are shown in Figure 8.)

H. 430 mm (16.9 in.) — locates the top of the opening of the Seal Plate (if used) above the floor. (The dimensions of the Seal Plate are shown in Figure 8.)

Figure 18 **Side-By-Side Kit — Solid Darkroom Wall (without an in-line silver recovery device)**
Note: This type of wall opening may be needed if roll films are to be used with the DFT.

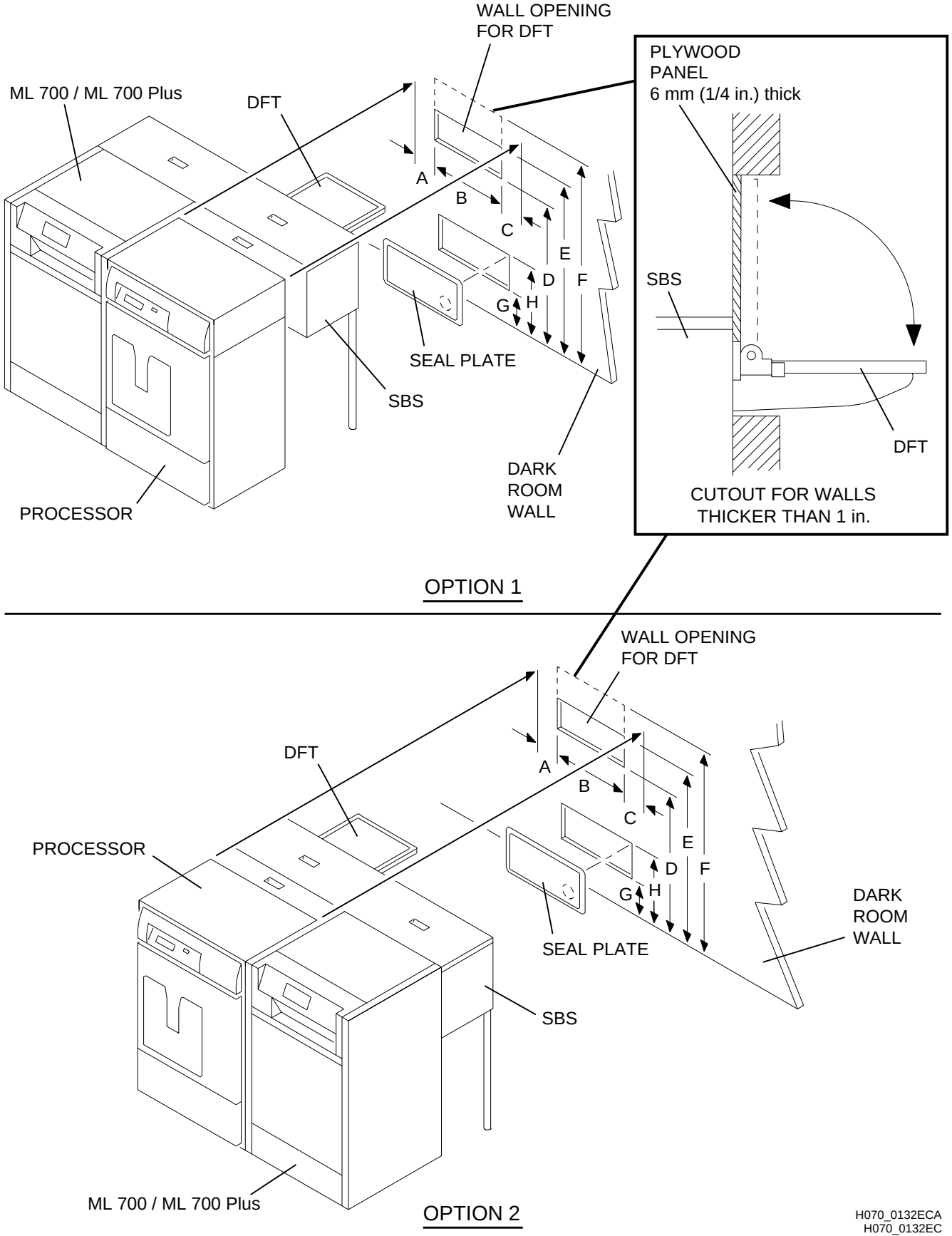

Processor Opening in Darkroom Wall

Note

All materials (plywood panels, etc) required to close openings in the darkroom wall must be provided locally.

Two plywood panels are needed for the following reasons:

- To close the Processor opening in the Darkroom Wall.
- To provide a flat surface so that the SBS/Darkroom Wall contact can be made lighttight.
- To provide a surface to which to attach the SBS Kit.

The Processor opening in the Darkroom Wall should be made lighttight by Plywood A, located behind the Processor (see Figures 19 and 21). Plywood B is a similar panel and is located on the Darkroom Wall behind the Multiloader 700.

The dimensions of Plywood A and Plywood B are shown in Figure 20 (no in-line silvery recovery device) or Figure 22 (with an in-line silver recovery device).

The Seal Plate is used to provide lighttightness when the connections for plumbing and dryer exhaust must penetrate the darkroom wall. The dimensions of the Seal Plate are given in Figure 8, and its locations are detailed in Figures 19, 20, 21 and 22.

The locations and dimensions of wall openings shown in Figure 19 and in the list below are the same whether the installation is Option 1 or Option 2 (the openings must always line-up with the Processor):

A. 40 mm (1.6 in.) — locates the left end of the DFT opening with respect to the outside edge of the Processor frame.

B. 550 mm (21.6 in.) — length of the wall opening for the DFT.

C. 150 mm (6.0 in.) — locates the right end of the DFT opening with respect to the outside edge of the Processor frame.

D. 1030 mm (40.6 in.) — locates the bottom of the DFT opening above the floor.

E. 1210 mm (47.8 in.) — locates the top of the minimum opening for the DFT, above the floor.

F. 1550 mm (61.0 in.) — locates the top of the largest opening for the DFT, above the floor.

Note

Dimensions G and H locate the Seal Plate for an installation without an in-line silver recovery device. The change to location and orientation of the Seal Plate for an installation with an in-line silver recovery device is shown in Figures 21 and 22.

G. 220 mm (8.7 in.) — locates the bottom of the opening for the Seal Plate (if used) above the floor. (The dimensions of the Seal Plate are shown in Figure 8.)

H. 430 mm (16.9 in.) — locates the top of the opening of the Seal Plate (if used) above the floor. (The dimensions of the Seal Plate are shown in Figure 8.)

Figure 19 **Side-By-Side Kit — Processor Opening in Darkroom Wall and Plywood Panels (without in-line silver recovery device)**
Note: This installation is not planned to include an in-line silver recovery device.

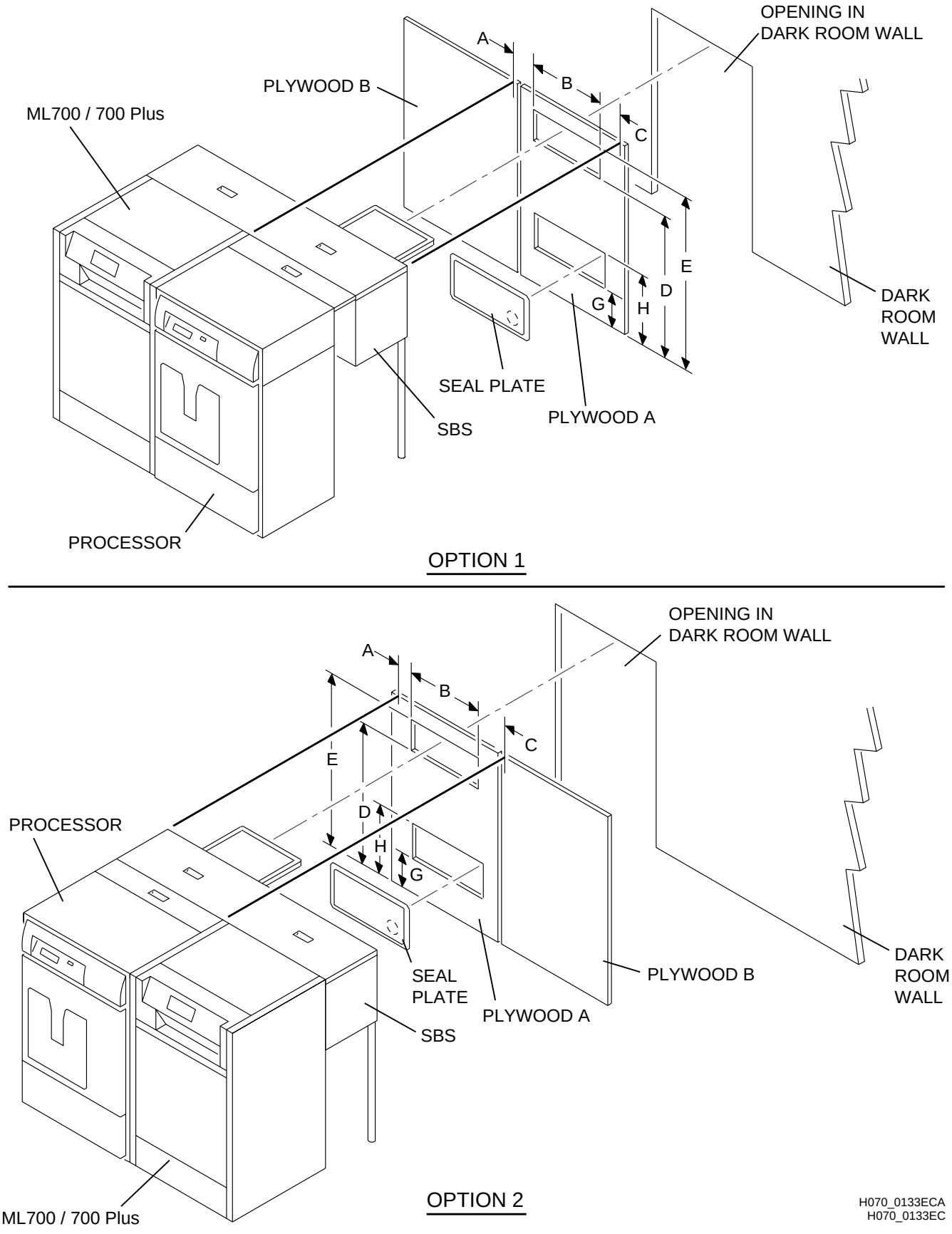

Figure 20 **Side-By-Side Kit — Processor Opening in Darkroom Wall and Plywood Panels (without in-line silver recovery device)**

Note: This installation does not include an in-line silvery recovery device.
All materials (plywood panels, etc) required to close openings in the darkroom wall must be provided locally.

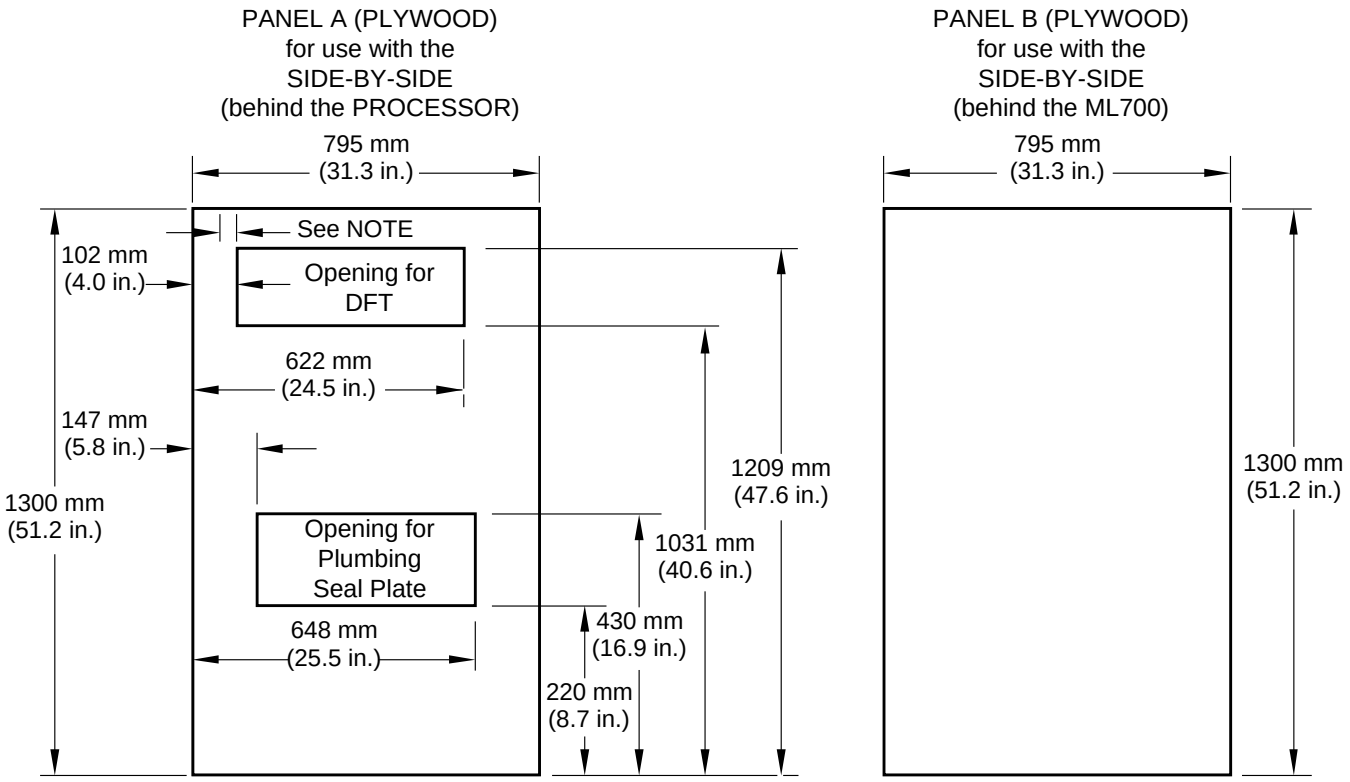

NOTE: This edge of the DFT opening is 41 mm (1.6 in.) to the RIGHT of the side of the PROCESSOR.

H070_0129DC

Figure 21 **Side-By-Side Kit — Processor Opening in Darkroom Wall Plywood Panels (with in-line silver recovery device)**
Note: This installation is planned to include an in-line silver recovery device.

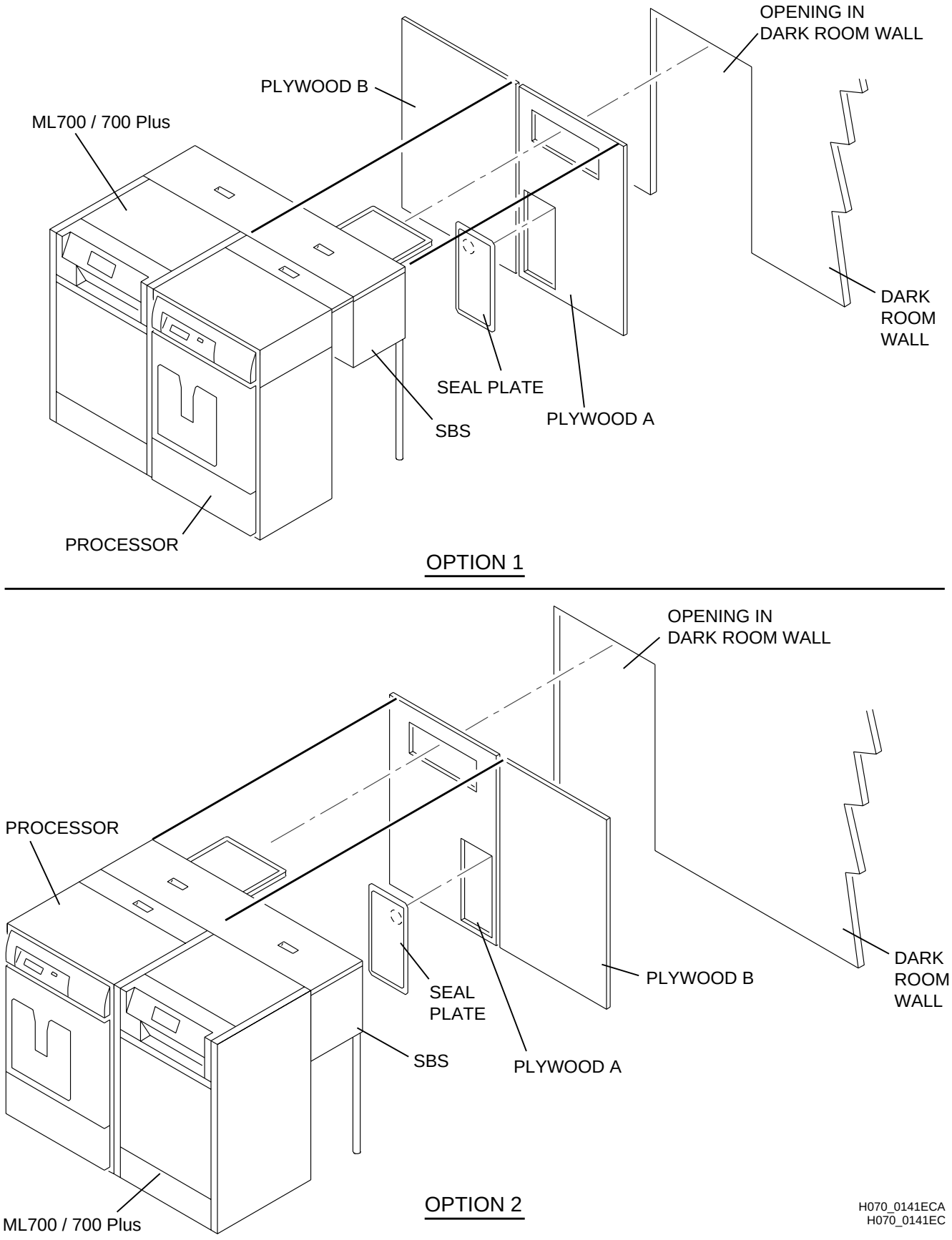

Note

All materials (plywood panels, etc) required to close openings in the darkroom wall must be provided locally.

Figure 22 **Side-By-Side Kit — Processor Opening in Darkroom Wall and Plywood Panels (with in-line silver recovery device)**
Details of Panels A and B when an in-line silver recovery device is to be installed.

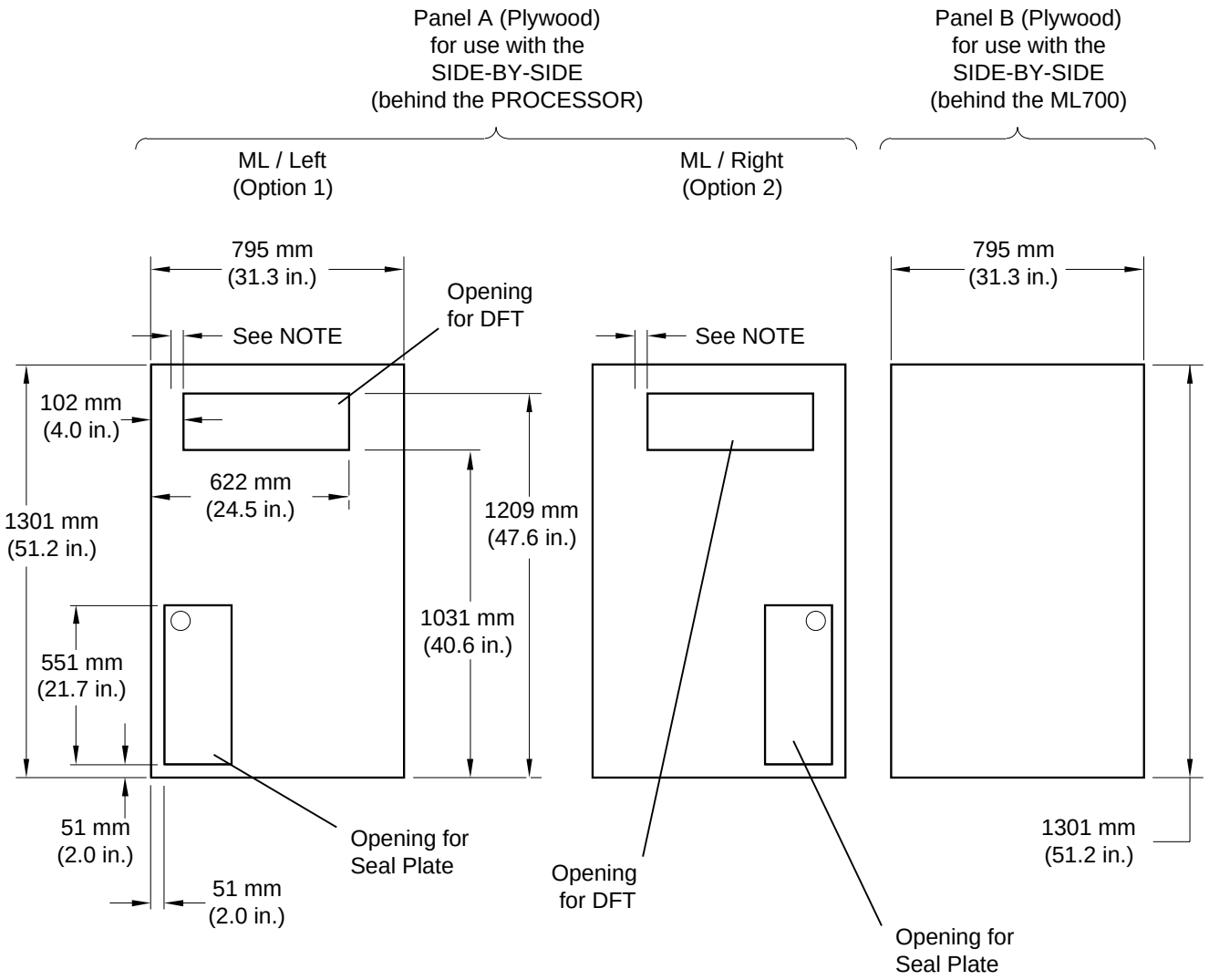

NOTE: This edge of the DFT opening is 41 mm (1.6 in.) to the RIGHT of the side of the PROCESSOR.

H070_0140DCA
H070_0140DC

Section 10: Requirements for Seismic Brackets for the Multiloaders 700 and 700 Plus

For the In-line Configuration

When Seismic Brackets are required by local code, for the In-line Configuration order 3 BRACKETS, Part No. 748148. See Footprint, Part No. XP3053-1 for the location of the BRACKETS.

For the Side-By-Side Kit

When Seismic Brackets are required by local code, order the “Seismic Bracket Kit for the Multiloaders 700 and 700 Plus with the Side-By-Side Kit”, Part No. 5B6958. The Seismic Footprint included in the Kit is Part Number 5B6959.

The floor of the site must allow installation of the Seismic Brackets at the locations shown in Figure 23.

Figure 23 **Seismic Brackets**

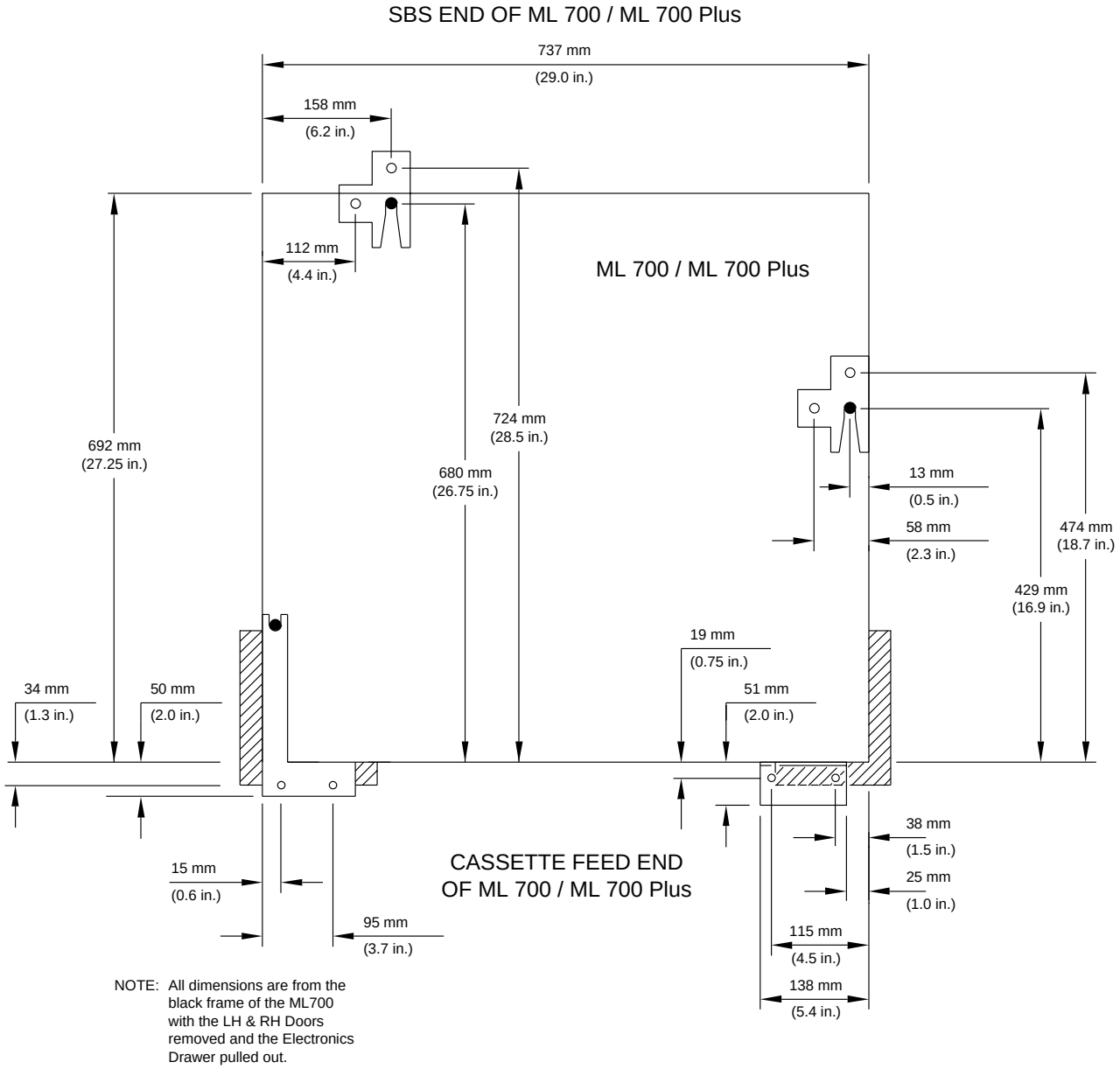

Section 11: Correct Venting Test Procedure for the Film Processor

If installing a Multiloader 700 or 700 Plus and SBS to a film Processor, it is important that the Processor has correct venting. The Multiloaders 700 and 700 Plus do not need to be separately vented.

The Fan in the SBS is powered separately from the Multiloader and the Processor and keeps fumes from entering the SBS.

If the Processor is not vented correctly, fumes will cause corrosion and malfunctions in the Multiloader. The airflow is correct when the fumes are flowing out of the Processor through the Exhaust Hose. It is mandatory to install an Exhaust Hose to the Processor so that the fumes are transported out of the room where the Multiloader is installed.

Do the following procedure, using an Air Meter TL-2431, to check that venting is correct:

Important

Before making the measurements for negative static pressure, check that the Processor is de-energized and that the Duct is not connected to the Processor.

[1] If ventilation is to be connected to the Processor, measure the negative static pressure in the Exhaust Duct by doing the steps below.

- **(a)** Connect one end of the Rubber Hose to the L Tube, both provided with the Air Meter (See Figure 24).
- **(b)** Connect the other end of the Rubber Hose to the Center Connector on the Air Meter.
- **(c)** Disconnect the Exhaust Duct from the Processor.
- **(d)** Make a 6.4 mm (¼-in.) hole approximately 30.5 cm (12 in.) from the end of the Exhaust Duct to be connected to the Processor.
- **(e)** Insert the L Tube into the hole made in the Exhaust Duct so that the end of the Tube is flush with the inside of the Exhaust Duct.
- **(f)** Check that there are no air leaks around the L Tube.
- **(g)** Hold the Air Meter vertically and read the pressure on the Meter.

Figure 24 **Measuring the Negative Static Pressure in the Exhaust Duct**

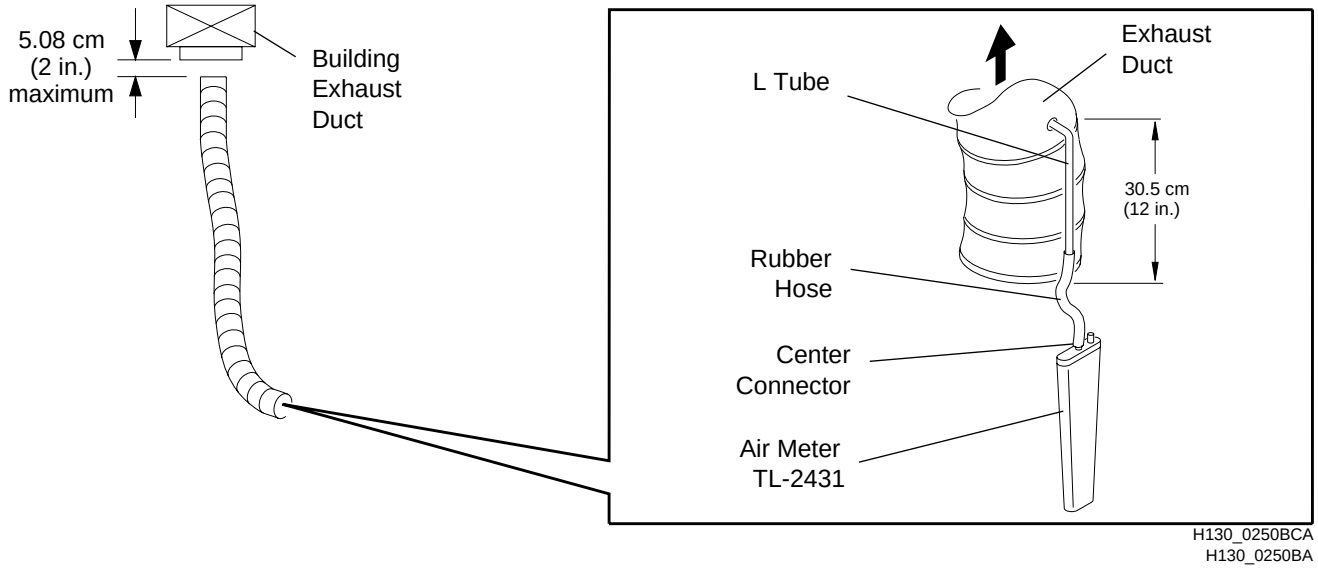

(h) See the table below to determine the correct negative static pressure. To obtain the correct negative static pressure, adjust the air gap between the Building Exhaust Duct and the Duct from the Processor. (See Step 4 below and Figure 25).

DUCT Diameter	Negative Static Pressure (Water Head)	
	MIN	MAX
7.6 cm (3 in.)	0.8 mm (0.03 in.)	1 mm (0.04 in.)
10.2 cm (4 in.)	0.25 mm (0.01 in.)	0.5 mm (0.02 in.)

[2] Remove the L Tube from the Exhaust Duct.

[3] Seal the hole in the Exhaust Duct.

[4] If your site conditions require you to have an auxiliary fan installed, order as indicated below.

(a) Part No. 264503 KODAK Auxiliary Ventilation Fan Kit / 110 V (operates on 110 VAC)

(b) Part No. 8B7105 KODAK Auxiliary Ventilation Fan Kit (operates on 95 to 250 VAC, 47 to 63 Hz)

Note

If you wish to order an Air Gap Assembly separately, order Part No. 264519.

[5] To adjust the Air Gap Assembly, see Figure 25.

Figure 25 **Adjusting the Air Gap for Use with the Optional Auxiliary Ventilation Fan Kit**

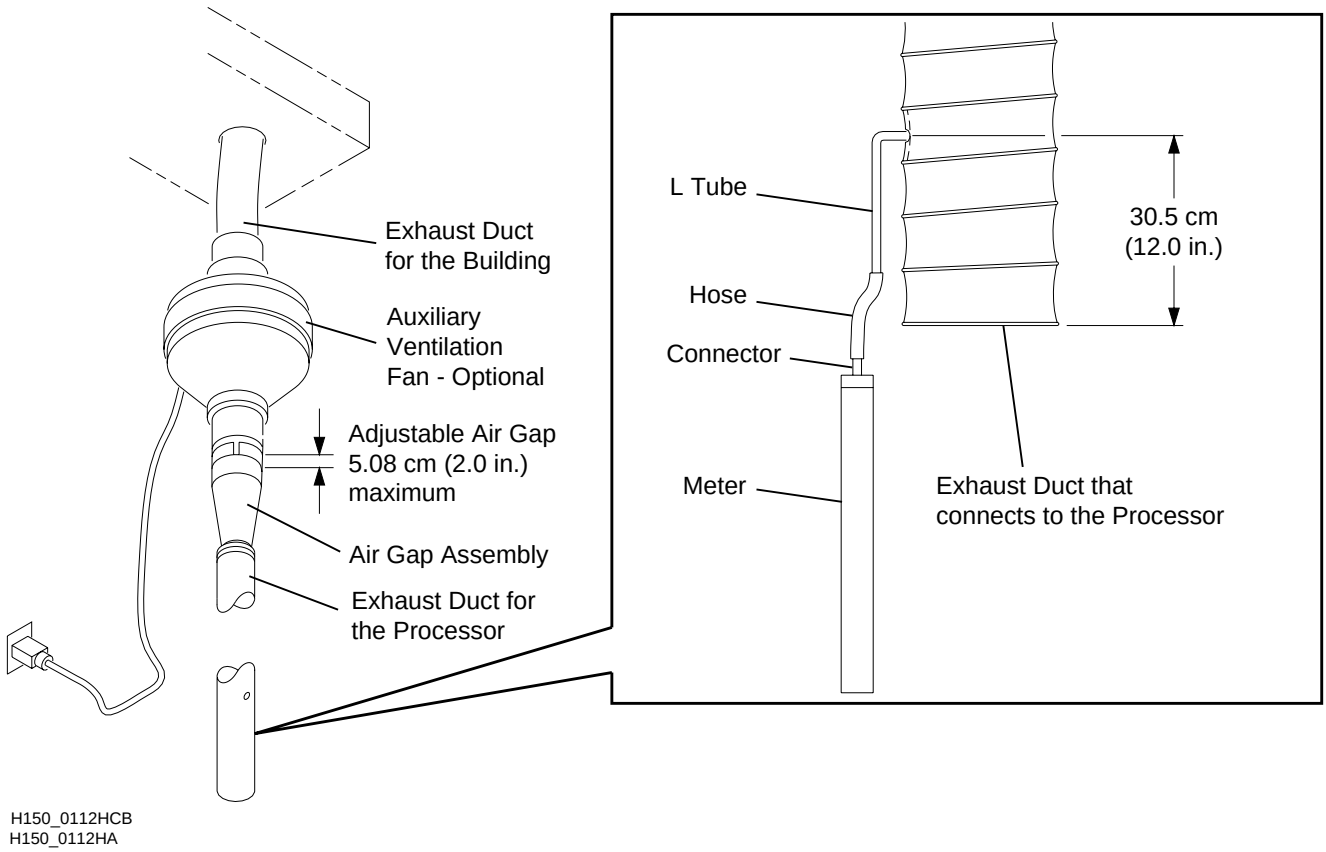

Section 12: Dimensions and Location of the Humidifier

- **Make certain that it is possible to remove the Rear Cover with the Humidifier installed. Maneuvering is necessary to remove the Cover, so leave sufficient room.**
- Vertical dimensions are given from the bottom of the Rear Cover, since the floor clearance may vary, depending on how the Processor is installed.

Figure 26 **Dimensions and Location of the Humidifier on the Multiloader 700 or 700 Plus**

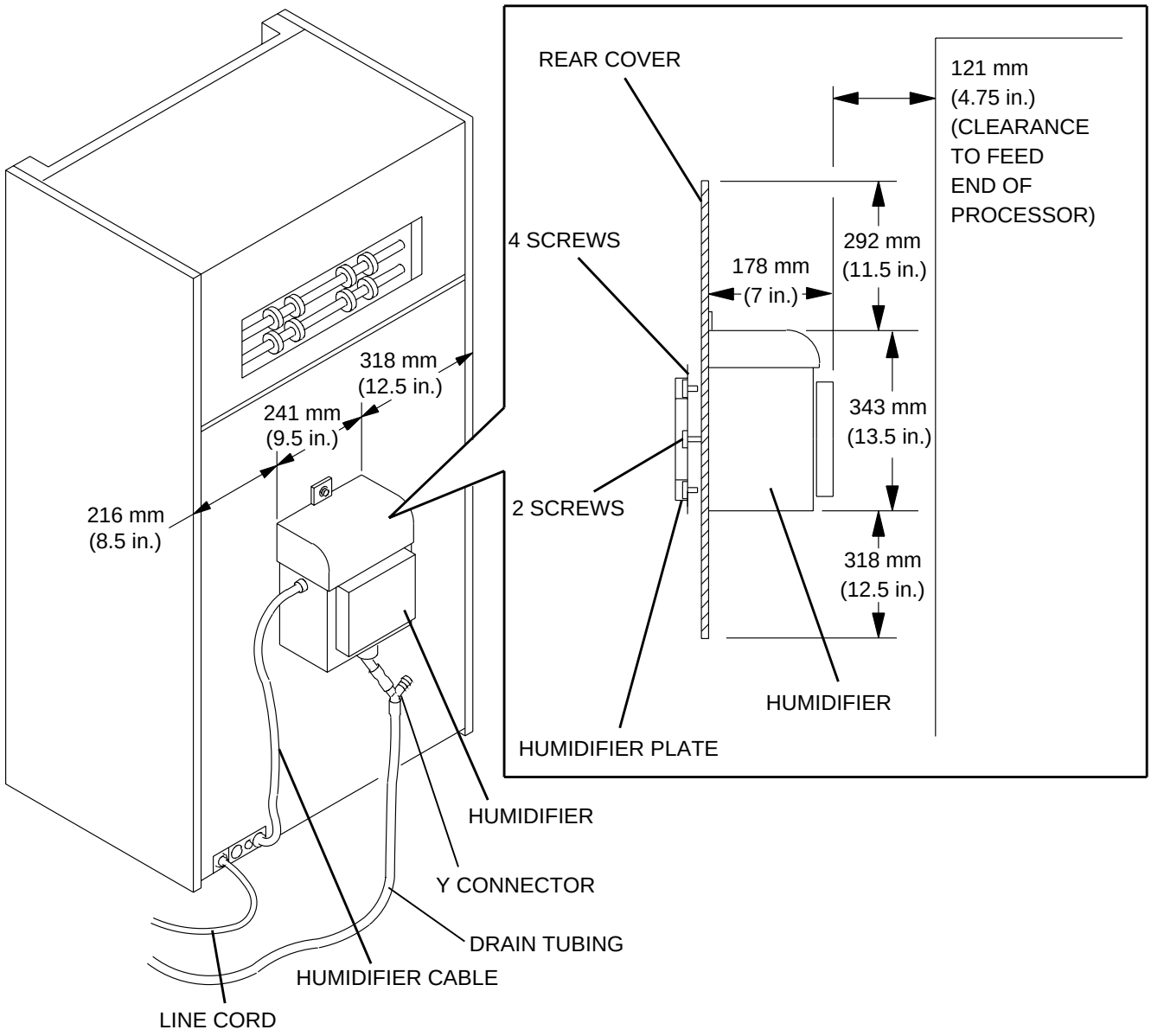

H070_0065DCA
H070_0065DC

Section 13: Multiloader 700 or 700 Plus – Center of Gravity

Assumption:

Seven magazines filled with 100 sheets each, 35 x 35 cm are installed in the Multiloader 700 or 700 Plus.

Figure 27 **Multiloader — Center of Gravity**

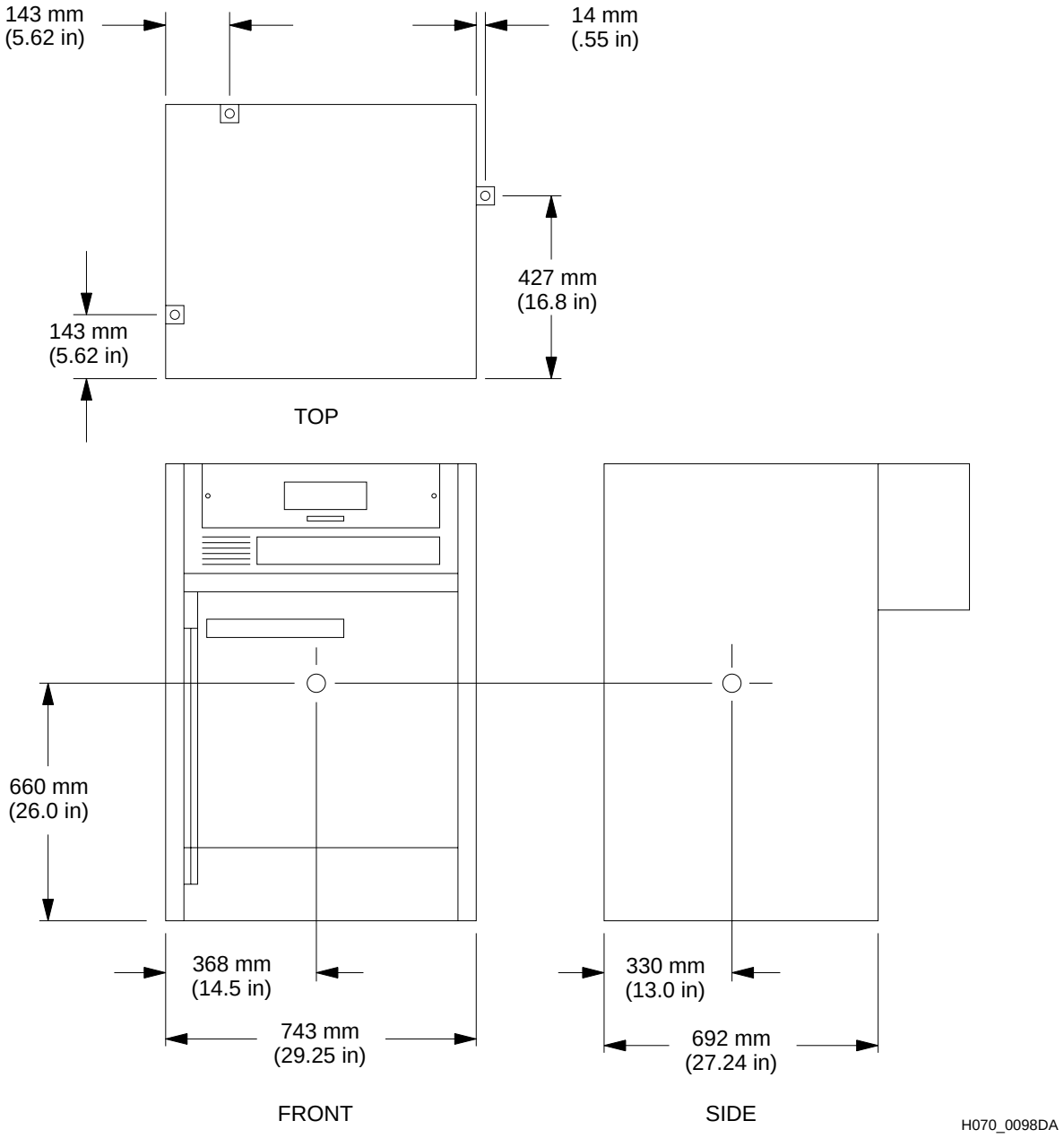

Section 14: Side-By-Side Kit — Center of Gravity

Figure 28 **SBS — Center of Gravity**

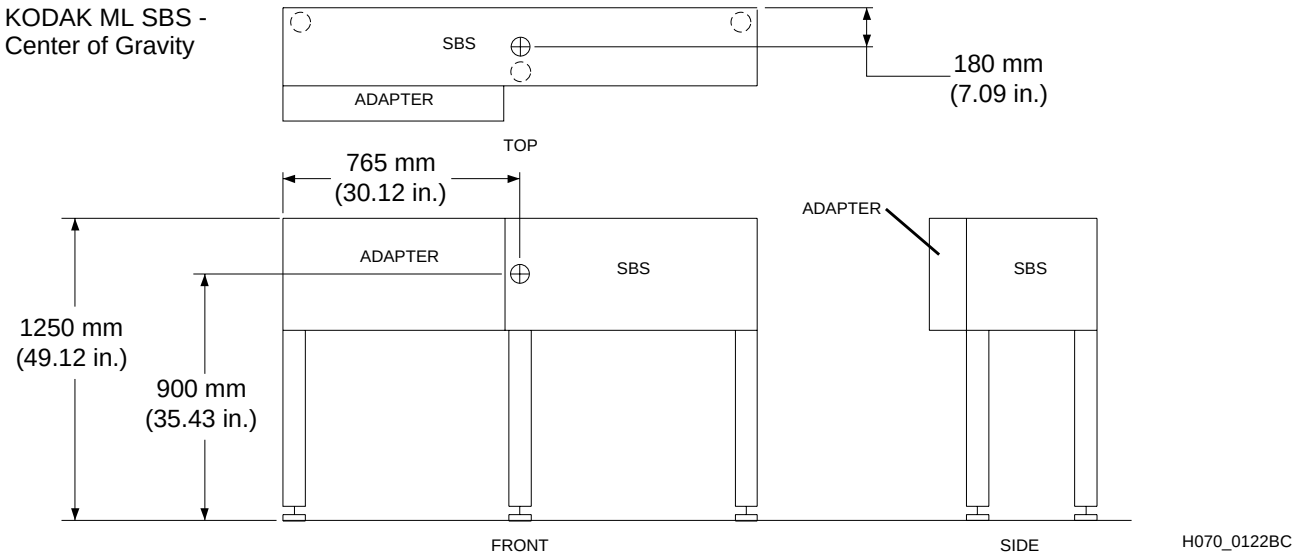

Publication History

Print Date	Pub. No.	ECO No.	Affected Pages	File Name	Notes
SEP95	8B7005	2504-428	All	ss3053_428.doc	Major Revision Frame Conversion
NOV95	8B7005	2504-430	Revision	ss3053_430.doc	Added Multiloader 700 Plus
JAN96	8B7005	2504-437	Page 6	ss3053_437.doc	Corrected Catalog Number
MAY96	8B7005	2504-448	All	ss3053_1_01may96.doc	Text and Dimension Changes Throughout

Kodak, Min-R, X-Omatic, and *X-Omat* are trademarks.

HEALTH IMAGING

EASTMAN KODAK COMPANY ● ROCHESTER, N.Y. 14650