How to print and add Comments

1 Printing single Pages, Chapters or the complete Manual

IMPORTANT:

This PDF manual is screen optimized – nevertheless it is possible to print single pages, single chapters or the complete manual on paper size DIN A4 or Letter.

Some pages – especially circuit diagrams for equipment – have been created on paper size larger than DIN A4/Letter. Printing these pages on DIN A4/Letter may result in reduced legibility.

Preferably print circuit diagrams on a DIN A3/ANSI B (Ledger) printer, if available.

1.1 Printing single Pages or Chapters

To print single chapters or pages of a chapter proceed as follows:

(1) Click the bookmark of the desired chapter

(2) Write down or remember the shown page number

(3) Go the end of the section or desired range of pages

(4) Select "Print"

(5) Select the page range

(6) Select "Reduce to printer margins" and "Auto-rotate and Center".

(7) Select “OK”

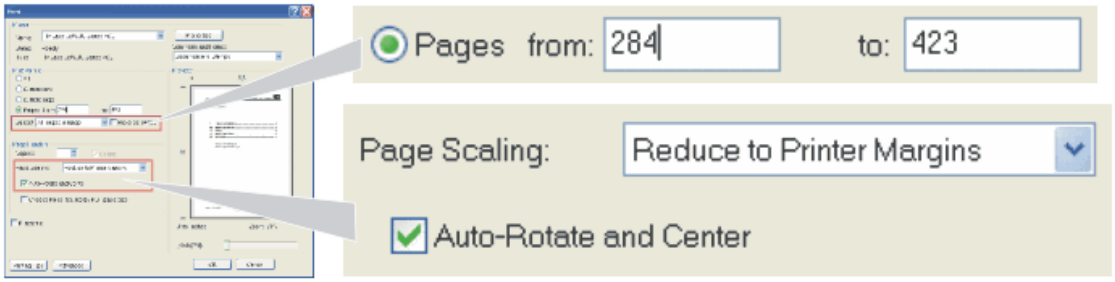

NOTE:

“Reduce to printer margins” may be named on other Adobe Reader versions “shrink to printable area” or “shrink oversized pages to paper size”

Document Node ID: 16099429
Copyright © 2006 Agfa-Gevaert HealthCare

1.2 Printing the complete Service Manual

To print the complete service manual proceed as follows:

(1) Select "Print"

(2) Select “All”

(3) Select "Reduce to printer margins" and "Auto-rotate and Center". (see NOTE previous page)

(4) Select “OK”

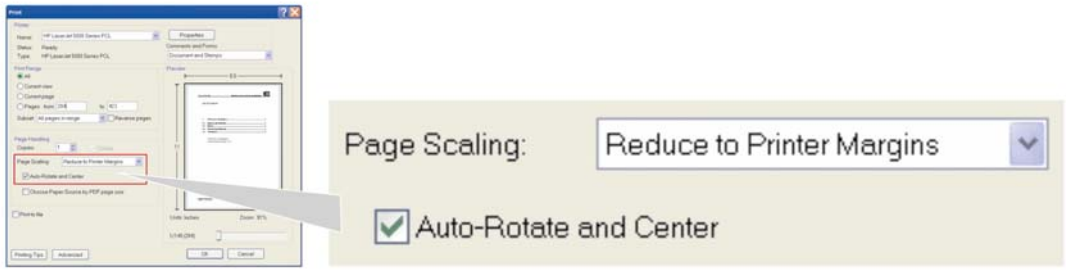

2 Adding Comments

- If you open this file in an Adobe Reader version ≥ 7, the comment toolbar will show-up.
- This allows adding comments, to highlight or underline text and many more text manipulations.

2.1 How to export your Comments

(1) In the drop down menu “Comment & Markup” select "Show comments List"

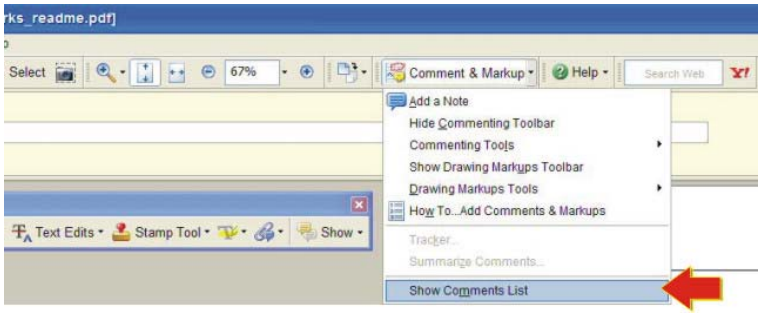

(2) Select the desired comments: Press the CTRL-key for multiple selections.

(3) Select “Options - Export Selected Comments”

(4) Save the file with any name

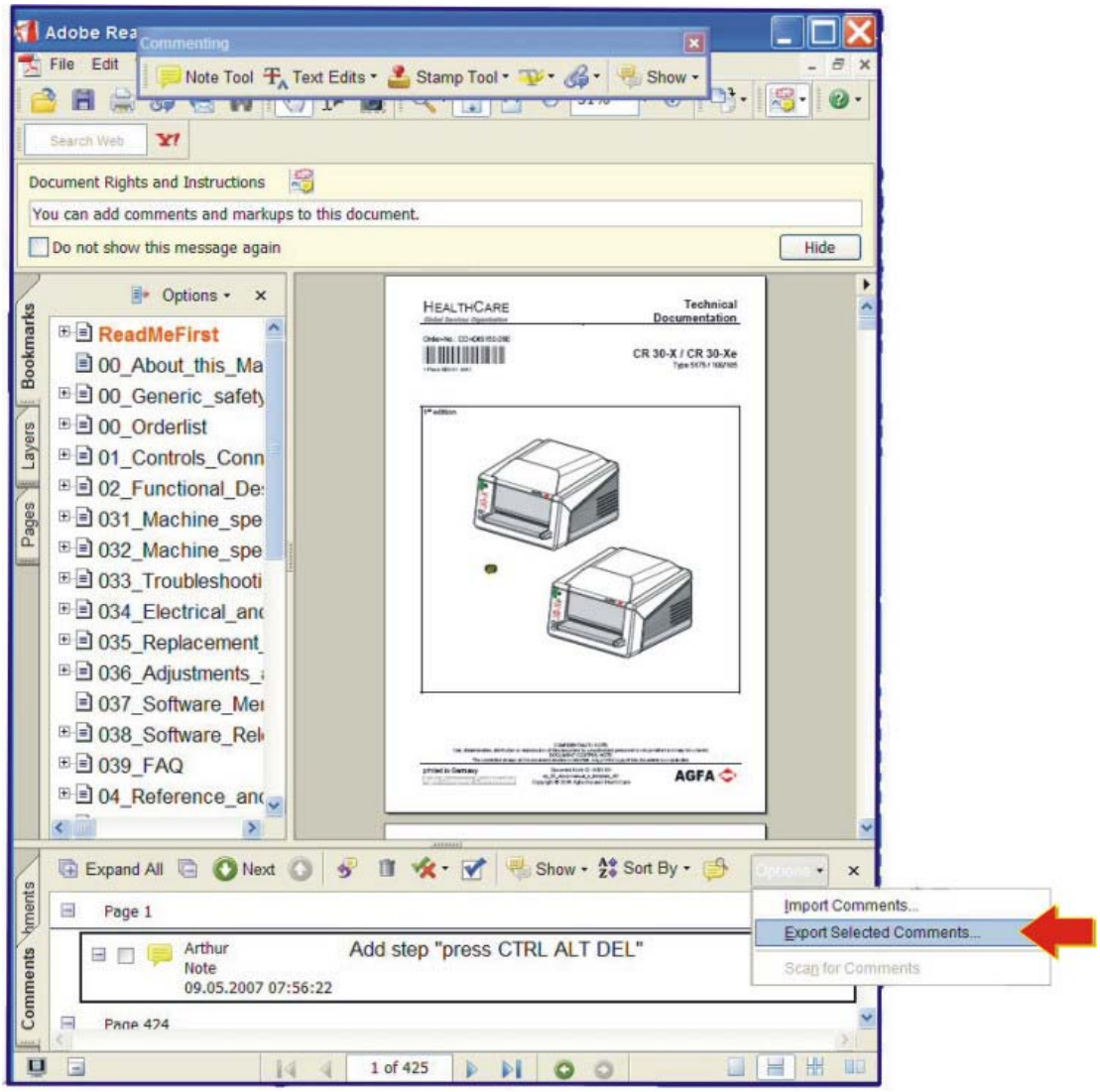

2.2 How to import Comments

(1) In the drop down menu “Comment & Markup” select "Show comments List"

(2) Select “Options - Import Comments”

(3) Browse for the comments file and press “select”

NOTE:

The imported comments possibly appear on different pages, if the file where the comments have been imported has a different number of pages.

HEALTHCARE
Global Services Organisation

Technical Documentation

Order No.: DD+DIS301.03E

1 piece WACEX MA1

Classic E.O.S.

Type 5270 / 100
as of SN 4500

Classic E.O.S. CL

Type 5270 / 105
as of SN 1138

Edition 6

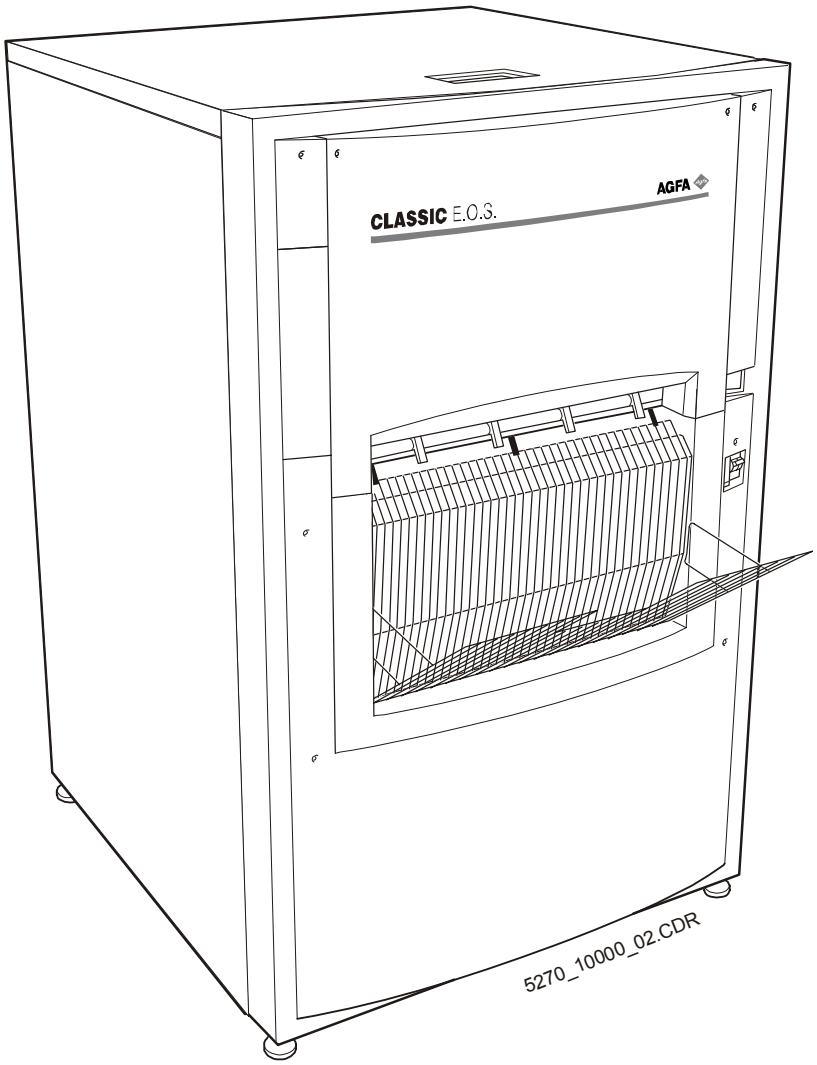

printed in Germany 02 / 2005

AGFA

HEALTHCARE
Global Services Organisation

Technical Documentation

Order No.: DD+DIS301.03E

1 piece WACEX MA1

Classic E.O.S.

Type 5270 / 100

as of SN 4500

Classic E.O.S. CL

Type 5270 / 105

as of SN 1138

6. Edition

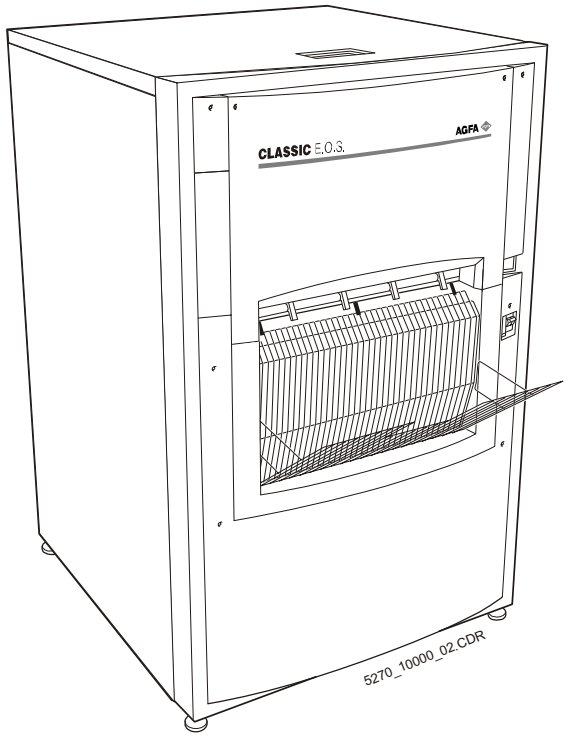

Ordering of spare parts and spare part kits:	**Phone:**	**xx49 - (0)89 - 6207 -3760**
	Fax:	**xx49 - (0)89 - 6207 -7388**
Ordering of documentation:	**Phone:**	**xx49 - (0)89 - 6207 -3553**

Caution:

This system uses mains voltage. Please observe the pertinent safety instructions.

These instructions describe adjustments and routines which must only be performed by qualified technical personnel.

Note:

Electrical repairs and connections must only be made by certified electricians.

Mechanical repairs and connections must only be made by certified technicians.

CE Declaration:

According to the medical directives the CE Declaration (CE Conformity) becomes void if the product is modified without permission of the manufacturer!
This applies to all parts, not only the safety devices!

AGFA-GEVAERT AG HE/S&S - GSO
Tegernseer Landstr. 161 D-81539 Munich

printed in Germany 05 / 2005

Agfa Company Confidential

AGFA

Contents

0. Order list
1. Installation preparations
2. Controls and connectors
3. Installation / start-up
4. Operating instructions
5. Theory of function
6. Repair and Service
7. Reference and circuit diagrams
8. Spare parts list
9. Accessories
10. Modifications
11. Technical standard modifications
12. Maintenance
13. Field Service Bulletins
14. Installation planning
15. Glossary / key word index

Pictographs and conventions for this documentation

This documentation uses certain conventions (pictographs, styles) to help you find information faster and easier.

Meaning of the pictographs

High voltage!

Attention!

Info

Hint

Required spare part

Required time

Waiting time

Required tools

Removal

Installation

Mechanical adjustment

Electrical adjustment

Calibration

Conventions

Activity	Type face	Example
Instruction, Explanation	Switch on machine	Switch on machine
Mouse activities, or Return key	`<omni-cd.exe>`	Doubleclick the icon `<omni-cd.exe>`
Text input via keyboard required	`vips`	Enter `vips` and click `<Continue>`

Agfa Company Confidential

Classic E.O.S. / Classic E.O.S. CL (Type 5270/100/105) Edition 6

The 6th edition is the Service Documentation applying to the machines **> SN4500 (Type 5270/100) or > SN1138 (Type 5270/105)**
It is not a replacement for Edition 5.
The 5th edition remains the Service Documentation applying to the machines **< SN4500 (Type 5270/100) or < SN1138 (Type 5270/105)**
and it includes the information about technical modifications in the machines up to these serial numbers.

All previous information regarding the serial number of Type 5270/105 (SN 1500) to differentiate compatibility is void. The new valid threshold for compatibility differentiation of Type 5270/105 is the serial number SN 1138. This serial number refers to the complete documentation.

Edition 6 provides information about technical modifications in the production standard as of serial numbers 4500 or 1138 respectively.
The technical modifications are:

- A new Control Board (with label F8.5270.7890) has been introduced, and this board only works with Software Version CLLC1107 and up. It is not compatible with the previous control boards and their software.
- The water circulation pump became an option.
- A level sensor in the fixer tank 2 has been added.
- The 24V crossflow fan has been replaced by crossflow fan with 230V.

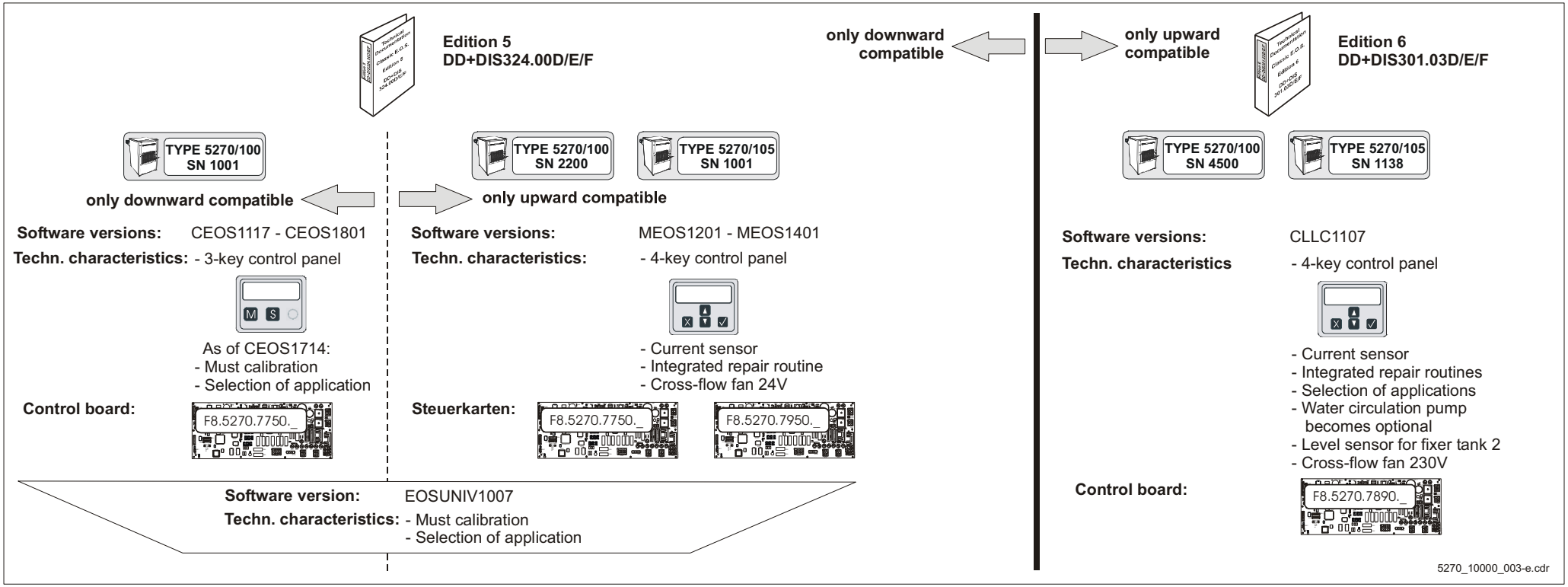

Order List for Documentation

Classic E.O.S.
Type 5270/100, from SN4500

Classic E.O.S. CL
Type 5270/105, from SN1138

NOTE:
Daily updated order lists are available in MedNet.

Order number for a complete Service Manual:

Order number		Edition
DD+DIS301.03E	Complete Service Manual	6

Order numbers for separately available chapters of the Service Manual:

Order number	Contents	Revision of document	Approval Date
DD+DIS302.03E	Chapter 12: Maintenance Instructions, Edition 6	0	2004-03-12
DD+DIS303.03E	Chapter 14: Installation Planning, Edition 6	0	2004-02-05
DD+DIS022.05M	Chapter 08: Spare Parts List	4	2007-11-28
DD+DIS060.03E	Chapter 08: Spare Parts List, Thoramat Docking Unit	3	2006-12-08

Access to MedNet GSO Library:

- ***IntraNet:** http://docs.agfanet/mednetcso-library
- ***ExtraNet:** http://extranet.agfa.com/bu/mi/mednet/mednetcso.nsf

* to request an account to the MedNet GSO Library go to:
http://intra.agfanet/bu/mi/mednethelp.nsf/EN/gettingaccess.htm

Inquiries:

- Phone + 49 89 6207 3949 Fax +49 89 6207 7274

DOCUMENT CONTROL NOTE:
The controlled version of this document resides on MedNet. Any printed copy of this document is uncontrolled.

Copyright © 2007 Agfa HealthCare N.V.

Checklist for Completeness

Classic E.O.S. / Classic E.O.S. CL

Type 5270/100/105

NOTE:

Verify latest level and completeness of your Service Manual by means of this checklist for completeness.
Only the document numbers listed here are valid. Discard documents with different numbers if necessary.

Chapter	Order number / Designation	Revision of document	Approval date	Pages
0	Order list Checklist for completeness List of Service Bulletins	-	2007-11-28	0/1-4
0	DD+DIS301.03E	0	2004-03-12	Cover sheet and list of contents
1	DD+DIS301.03E	0	2004-03-12	1/I, 1/1 – 1/13
2	DD+DIS301.03E	0	2004-03-12	2/I, 2/1 – 2/6
3	DD+DIS301.03E	0	2004-03-12	3/I-II, 3/1 – 3/57
4	Intentionally left blank	-	-	-
5	DD+DIS301.03E	0	2004-03-12	5/I-II, 5/1 – 5/42
6.1	DD+DIS301.03E	0	2004-03-12	6.1/I, 6.1/1 – 6.1/8
6.2	DD+DIS301.03E	0	2004-03-12	6.2/I, 6.2/1 – 6.2/10
6.3	DD+DIS301.03E	0	2004-03-12	6.3/I, 6.3/1 – 6.3/24
6.4	DD+DIS301.03E	0	2004-03-12	6.4/I, 6.4/1
6.5	DD+DIS301.03E	0	2004-03-12	6.5/I-II, 6.5/1 – 6.5/28
6.6	DD+DIS301.03E	0	2004-03-12	6.6/I, 6.6/1 – 6.6/6 (A3) 6.6/7 – 6.6/15
6.7	DD+DIS131.05E	2	2005-05-03	6.7/I, 6.7/1 – 6.7/2, 6.7/3
7	DD+DIS301.03E F1.5272.7005.0 Overview Control Board PCB1	0	2004-03-12	7/I, 7/1-13 Sh. 1-1 (A1) (A3)
8	DD+DIS022.05M DD+DIS060.03M	4 3	2007-11-28 2006-12-08	8/1 - 8/76 8/1 – 8/22
9	DD+DIS301.03E DD+DIS309.00E	0	2004-03-12	9/I Cover sheet, 9/I, 9/1 – 9/8
10	Intentionally left blank	-	-	-
11	DD+DIS441.04E	1	2004-12-22	11/I, 11/1

DOCUMENT CONTROL NOTE:
The controlled version of this document resides on MedNet. Any printed copy of this document is uncontrolled.

Agfa Company Confidential

Chapter	Order number / Designation	Revision of document	Approval date	Pages
12	DD+DIS302.03E	0	2004-03-12	Cover sheet 12/I, 12/1 - 12/25 Checklist 1-3
13	SB 01 DD+DIS157.04E SB 02 DD+DIS249.04E SB 03 DD+DIS277.04E SB 04 DD+DIS288.04E SB 05 DD+DIS214.04E SB 06 DD+DIS184.05E SB 07 DD+DIS009.07E SB 08 DD+DIS223.07E	n.a.	2004-05-07 2004-08-04 2004-08-31 2004-08-31 2004-07-06 2005-07-06 2007-01-29 2007-10-23	13/1-5 13/1-4 13/1-/3 13/1-/2 13/1-/2 13/1-/3 13/1-/3 13/1-/15
14	DD+DIS303.03E	0	2004-02-05	Cover sheet 14/I-II, 14/1 – 14/41
15	DD+DIS301.03E	0	2004-03-12	15/I, 15/1 – 15/3

DOCUMENT CONTROL NOTE:
The controlled version of this document resides on MedNet. Any printed copy of this document is uncontrolled.

List of Service Bulletins — Classic E.O.S. / Classic E.O.S. CL

Type 5270/100/105

- **The following SB's are valid:**

SB	Document number	Contents	Revision of document
SB 01	DD+DIS157.04E	Control Board PCB1 (CM+9 5270 9450 0) and Processor SOFTWARE CLLC1107 (CM+9 5270 9410 0) available as Spare Part	0
SB 02	DD+DIS249.04E	Introduction of Processor Software CLLC_1203 Order Number: CM+9 5270 9410 1 Control Board PCB1 incl. CLLC_1203 Order Number: CM+9 5270 9450 1	0
SB 03	DD+DIS277.04E	Magnet Not Sufficiently Fixed in the Machine Cover	0
SB 04	DD+DIS288.04E	Introduction of Anti-Algae-Unit Type: 5279/100	0
SB 05	DD+DIS214.04E	Installation of the Tank Reinforcement CM+9 5270 9071 0 This document describes the installation of a tank reinforcement that prevents bending of the intermediate tank walls.	0
SB 06	DD+DIS184.05E	Service 574: "IR heater in dryer defective" due to measuring error caused by wrong cable positioning at the Current Sensor Board PCB2.	0
SB 07	DD+DIS009.07E	Manufacturer's Warning about Ground Fault Interrupters with Possibly Higher Trigger Current.	0
SB 08	DD+DIS223.07E	Empty Battery of the Clock Chip Causes Incorrect Date and Incorrect Time Display Followed by a Calibration Request	0

- **The following SB's are no longer valid (integrated in the chapters of the Service Manual, or technically obsolete):**

SB	Document number	Contents	Revision of document
--	--	--	--

DOCUMENT CONTROL NOTE:
The controlled version of this document resides on MedNet. Any printed copy of this document is uncontrolled.

Preinstallation

1

Section 1

contains all important preinstallation data for the machine:

- Inspection of the packing material for transport damage and complete shipment
- Unpacking and packing notes
- Machine positioning at the installation site
- Requirements on the installation site
- Connection data (electrical, if necessary, connections to chemical supply and disposal, fiber optic connections)

Make sure to study this section and before starting the installation check if all preparations have been made as specified.

Chapter 1

Contents

1 Safety 1

2 Installation Preparations 3

2.1 Machine transport 3
2.2 Checking the shipment 3
2.3 Transport check 3
2.4 Checking safety indicators on the machine box 3
2.5 Transport path 4
2.6 Required space at the installation site 5
2.6.1 Classic E.O.S. Type 5270/100 5
2.6.2 Classic E.O.S. CL Type 5270/105 6
2.7 Unpacking 7
2.8 Checking the type label 8
2.9 Checking the accessory box 8

3 Technical Data 9

3.1 Electrical data 9
3.2 Ambient and climatic conditions 9

4 Dimensions and Weights 11

4.1 Classic E.O.S. Type 5270/100 11
4.2 Classic E.O.S. CL Type 5270/105 11

5 Machine Standards and Directives 12

5.1 Safety 12
5.2 Radio interference suppression 12
5.3 Electromagnetic compatibility 12
5.4 Certificates and guidelines 13

1 Safety

General safety instructions

- The machine must only be used as described in the operating instructions. Any other use may result in damage to the machine or may affect the machine function with the consequence that the machine can no longer be used as intended, and therefore presents a risk for patients, user, and environment.
- The machine must only be operated by qualified personnel trained on the machine.
- Ensure that only trained personnel have access to the machine.
- Ensure that the machine can always be supervised and that any tampering is prevented.
- Repairs or modifications on the machine must only be performed by trained service personnel authorized by Agfa.
- In case of visible damage on the machine housing the machine must not be operated or used, and must immediately be disconnected from the mains.
- Built-in or external safety devices must not be circumvented or disabled.
- Disconnect the machine from the mains before starting any maintenance.
- If a mains connection is absolutely required these maintenance routines must only be made by specially trained personnel.
- Like all technical devices, this machine must be operated, cared for and serviced correctly as described in the documentation provided with the machine.
- If the machine is not operated correctly, or if it is not serviced correctly, Agfa will not be liable for any resulting disturbances, damage or injuries.
- When installing the machine make sure that either the mains plug or an all-cable disconnecting device is provided in the internal installation close to the machine and is easily accessible.
- If the machine is connected with other components or assemblies, Agfa will guarantee safety only for combinations which are approved by Agfa.
- In case of conspicuous smoke or noises, immediately disconnect the machine from the mains.

Special instructions for the handling of chemicals

- When handling chemicals, always observe the applying safety and environmental regulations, as well as the operating and warning instructions pertaining to these chemicals.
- Wear stipulated protective clothing and safety goggles.
- When disposing of chemicals and waste water, you must comply with the local regulations concerning waste water and environmental protection.
- If photo-chemicals get in your eyes, proceed exactly according to the warning instructions and/or the instructions published by the manufacturers of the chemicals. If required, immediately rinse your eyes with cold water. Afterwards see the doctor immediately.
- Avoid inhaling of chemical fumes. Make sure that there is sufficient ventilation at the installation site of the machine, i.e. an air exchange that is

at least ten times the room volume per hour.

- Always comply with the installation instructions.
- Verify tightness of all connections for chemicals and water, as well as waste water, on the machine in regular intervals. At least check whenever suggested in the operating instructions and/or service instructions.
- If solution gets into the inside of the machine (e.g. by spilling during tank filling), the machine must immediately be disconnected from the mains and cleaned thoroughly by the service personnel.
- Do not use additional chlorine or chlorine containing substances inside the processor. The use of additional chlorine or chlorine containing substances can lead to irreversible damage of the equipment. Using these substances may void the manufacturers warranty.

The film processor must not be operated in the direct vicinity of the patients as defined in EN60601-1 and IEC 601-1.

Adherence to safety regulations

- This film processor meets the safety requirements as defined in EN 60950: 1997 (IEC 950) and EN 60601-1-2: 1993, UL 1950 and CSA C22.2 No. 950 and has interference suppression as defined in EN 50081-1, EN 55011, and FCC 47 Part 15, Subchapter B, Class A.
- The water connection complies with DIN 1988 / EN 1717:2001.

2 Installation Preparations

2.1 Machine transport

The freight forwarder transports the machine up to the final installation site. The responsible technician should be present during delivery.

2.2 Checking the shipment

Compare the labels on the boxes with the customer's order list and the bill of lading.

2.3 Transport check

Check the packing material for visible transport damage:

- dented edges
- damaged box
- torn fixing elements (metal straps, screws)

2.4 Checking safety indicators on the machine box

The machine is shipped on a pallet.
The box has a TILTWATCH indicator (A), a SHOCKWATCH indicator (B), and a packing seal (C) attached.

They are attached to the outside of the box and indicate if the machine has been tilted, was exposed to shocks, or has been opened during transport.

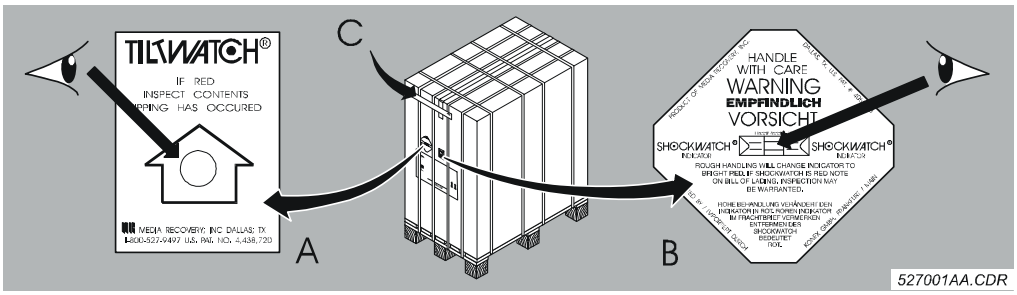

Figure 1

If the machine was tilted, the arrow head in the circle of the TILTWATCH indicator (A) changed from white to red.

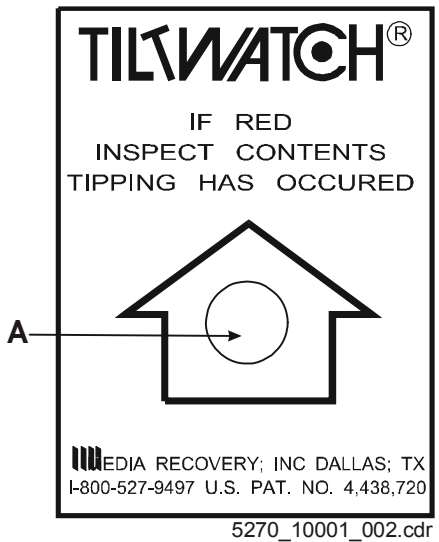

5270_10001_002.cdr

Figure 2

If the machine was subjected to shocks, the square field in the middle of the SHOCKWATCH indicator (B) changed from white to red.

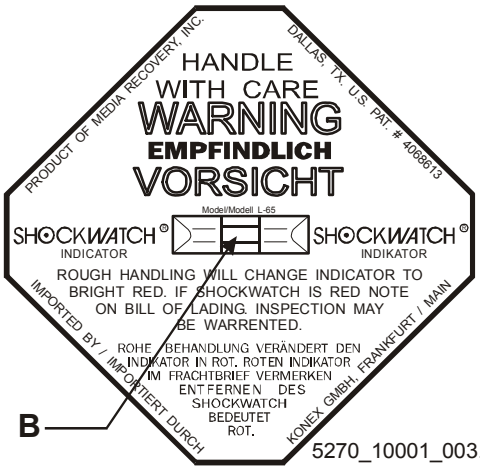

5270_10001_003.cdr

Figure 3

Note all detected damage in the installation report!
In case of a damaged machine make sure to keep the packing material for proof (transport insurance)!
Send the damage report to the insurance company.

2.5 Transport path

The film processor must fit through all doors and hallways on its transport path to the installation site.

Classic E.O.S. / Classic E.O.S. CL (Type 5270/100/105)	**smallest door width**
without pallet	at least 73 cm (29 inch)
with pallet	at least 82 cm (32 inch)

2.6 Required space at the installation site

2.6.1 Classic E.O.S. Type 5270/100

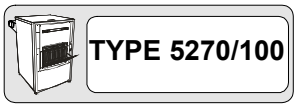

The required floor space for the film processor (with feed table, chute and the required clearance on the left) is 1260 x 860 mm (50.03 x 33.88 inch).

The free space indicated in the illustration must be guaranteed for repair and maintenance, otherwise the time required for service will increase.

Optimum dimensions:
We recommend to plan on this free space.

Minimum dimensions:
Do not go below this minimum space.

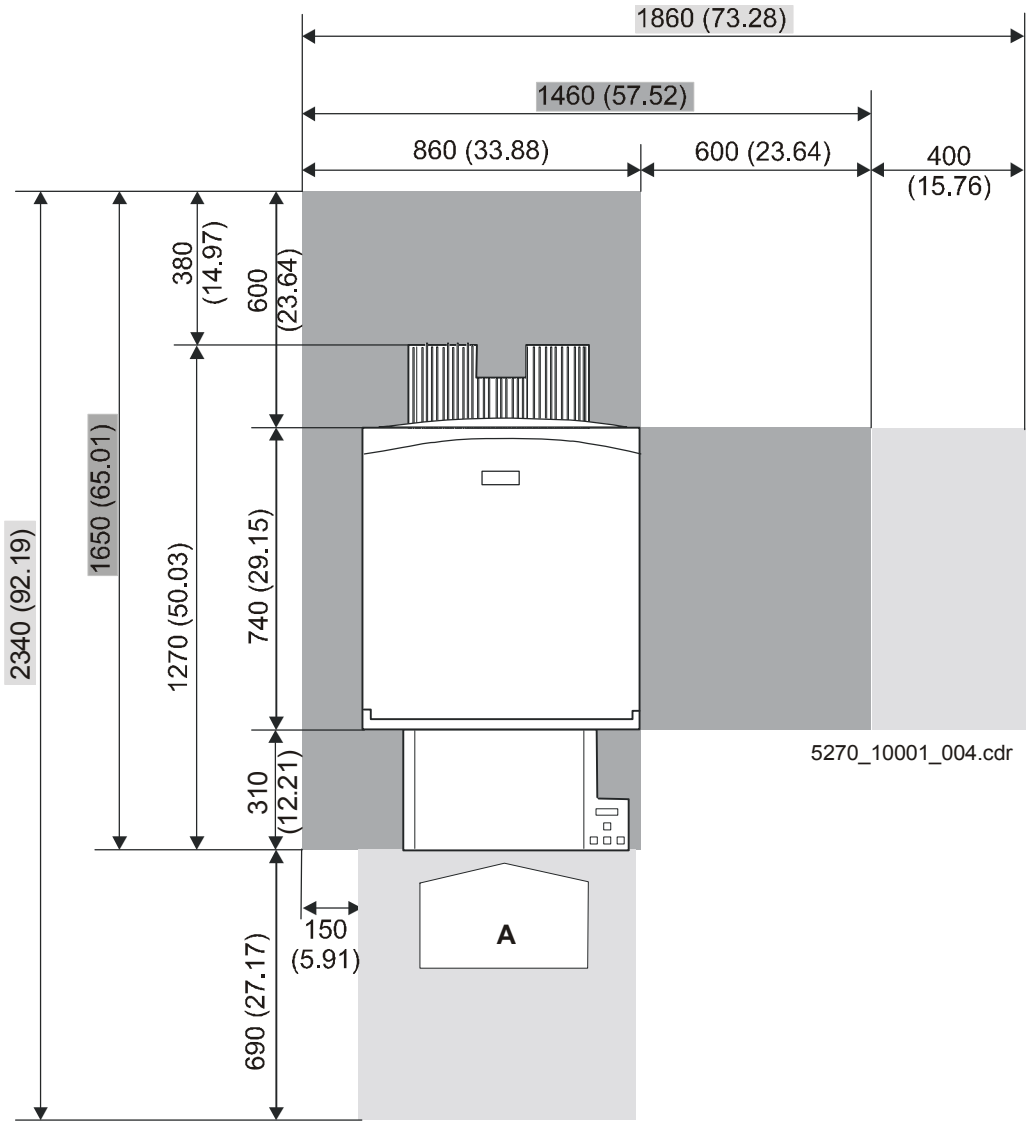

Figure 4

(A) Operation side
Dimensions in mm (inch)

2.6.2 Classic E.O.S. CL Type 5270/105

The required floor space for the film processor in combination with the Laser Imager LR3300 (with feed table, chute and the required clearance on the left) is 1700 x 860 mm (66.98 x 33.88 inch). In case of an installation of the Laser Imager LR3300 or another daylight system observe the installation documentation enclosed with the machine.

The free space indicated in the illustration must be guaranteed for repair and maintenance, otherwise the time required for service will increase.

Optimum dimensions:
We recommend to plan on this free space.

Minimum dimensions:
Do not go below this minimum space.

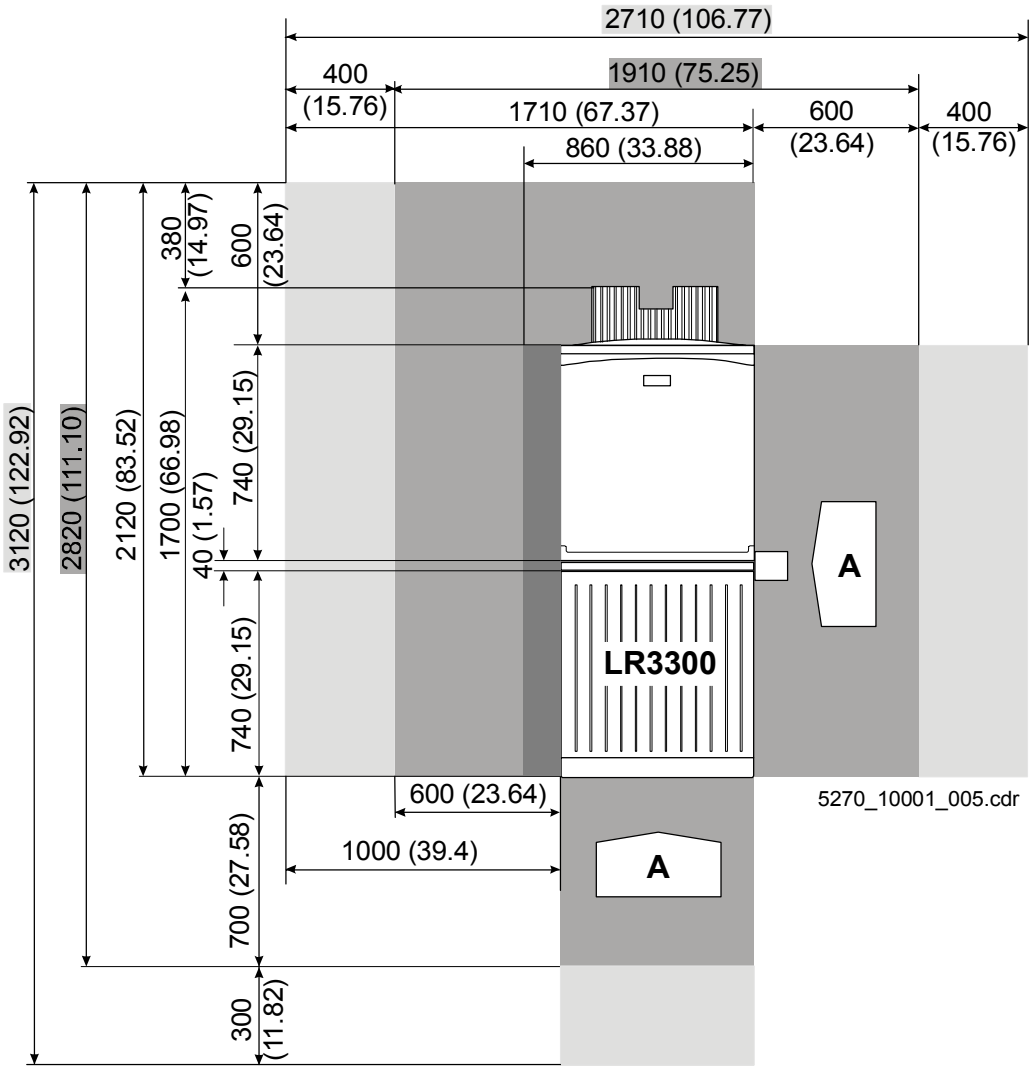

Figure 5

(A) Operation side
Dimensions in mm (inch)

2.7 Unpacking

For unpacking follow the illustrated instructions attached to the outside of the packing box and enclosed inside the box.

Required tools:

- Knife, scissors, or side cutting pliers to cut the straps
- Phillips screwdriver size 2
- Wrench size 10 mm
- Wrench size 13 mm
- Wrench size 17 mm
- Screwdriver 10 mm

- The forwarder will take back the packing material and dispose of it in compliance with the local regulations.

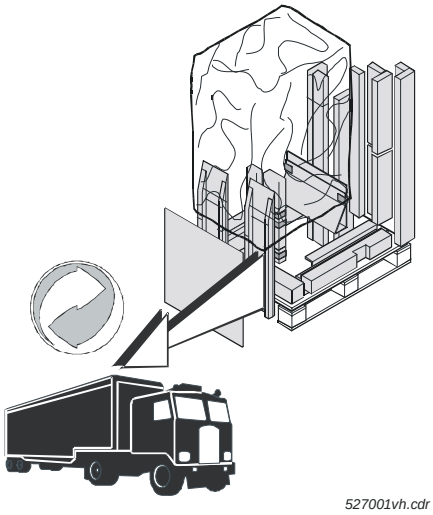

Figure 6

- Check the SHOCKWATCH indicator (A) inside the machine.

If the machine was subjected to shocks, the square field in the middle of the SHOCKWATCH indicator (A) changed from white to red.

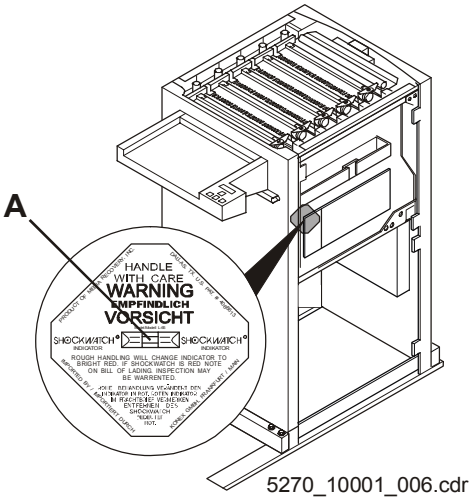

Figure 7

Note all detected damage in the installation report!
In case of a damaged machine make sure to keep the packing material for proof (transport insurance)! Send the damage report to the insurance company.

2.8 Checking the type label

Classic E.O.S. Type 5270/100 **Classic E.O.S. CL Type 5270/105**

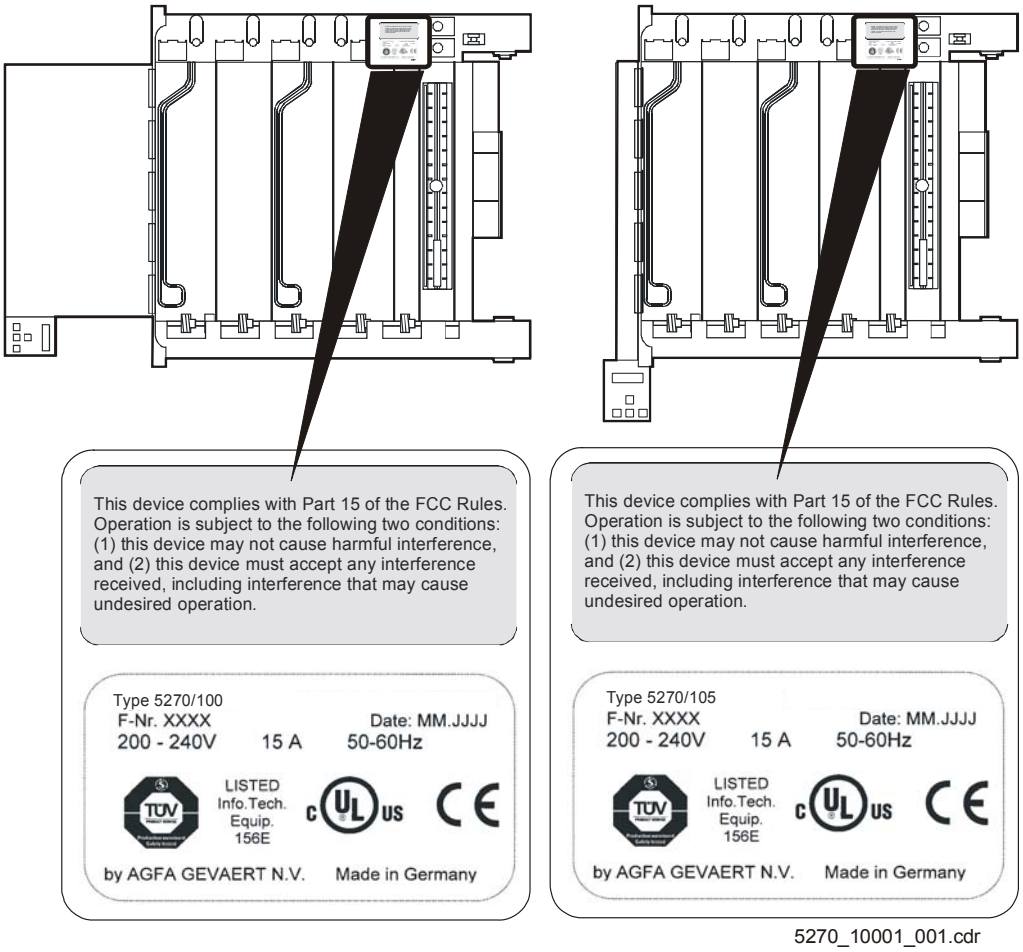

5270_10001_001.cdr

Figure 8

Explanation of the type label:

F-Nr. xxxx:	This is the consecutive serial number.
Date: MM.JJJJ:	This is the production date (month/year).
V 200-240 15 A 50-60 HZ:	Mains power supply

- Compare the information at "TYPE" and "F-Nr." on the type label with the bill of lading.
- Compare the rated voltage with the power supply at the installation site.

2.9 Checking the accessory box

- Compare the contents of the accessory box with the list of contents (included in the enclosed documentation pack).

3 Technical Data

3.1 Electrical data

This is a summary of the technical data which serve to inspect the installation site. For further technical, electrical, and climatic data and information regarding the ambient conditions refer to Chapter 14.

Mains voltage connection	1N~ **230** - 240 V; 50/60 Hz (200 - 240 V)
Power consumption: **Standby** **(room temperature ~ 20 °C)**	0.45 kW/h (1620 kJ/h)
During film processing	2.9 kW/h (10440 kJ/h) max. 3.45 kW/h (12420 kJ/h)
Fuse protection	15 A / 16 A
Leakage current towards ground	< 3.5 mA
Main switch	Upon machine installation it must be ensured that either the power plug or an all-pole circuit breaker for the installation on site is located close to the machine and easily accessible.
Safety rules	Electrical installations in the installation room must be in compliance with IEC 364 (VDE 0100 / 0107).
	A GFI switch (I_N = 30 mA in compliance with VDE 664) is integrated in the machine.

3.2 Ambient and climatic conditions

Ventilation	Avoid inhaling of chemical fumes. Make sure that there is sufficient ventilation at the installation site of the machine, i.e. an air exchange that is at least ten times the room volume per hour.	
Light-tightness	maximum 2500 Lux	
Acoustic test **ISO 7779 (airborne noise)**	during standby during film cycle	max. 35 dB (A) max. 48 dB (A)

Heat emission **(all values are approximate)**	Standby (max.)	into the room	250 W / 900 kJ/h
	Film cycle (max.)	into the connected exhaust	1200 W / 4320 kJ/h
		into the room	900 W / 3240 kJ/h
		total	2100 W / 7560 kJ/h
	Exhaust connection	The exhaust is a standard feature of the dryer. During film cycle the exhaust runs at full power. During standby mode the exhaust can be set to half-power via the service program.	
Room temperature	min. 10 °C (50 °F), max. 30 °C (86 °F) Room temperature min. 5 °C (41 °F) below the set developer temperature		
Relative humidity	min. 10 %, max. 80 %, no condensation		
Floor conditions	Waterproof, chemical-resistant floor covering (pH value 4 - 11) A floor drain close to the film processor is recommended.		
Floor load	50 N / cm² (7.75 N / in²)		
Cleaning sink	A cleaning sink with water tap and hose shower should be provided for maintenance work. Minimum inside dimensions of the sink: Width 70 cm (27.56 inch) Depth 40 cm (15.75 inch) Height 20 cm (7.87 inch)		

4 Dimensions and Weights

4.1 Classic E.O.S. Type 5270/100

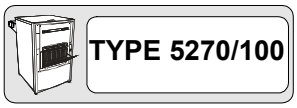

Dimensions

	Length mm (inch)	Width mm (inch)	Height mm (inch)
incl. packing box	1200 (47.28)	800 (31.52)	1460 (57.52)
without packing material (with feed table and chute)	1270 (50.03)	710 (27.97)	1130 (44.52)

Weight

	Weight approx. kg (lbs)
with packing material	200 (441)
without packing material	135 (297)
with full tanks	165 (364)

4.2 Classic E.O.S. CL Type 5270/105

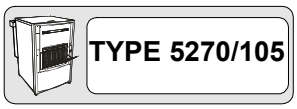

Dimensions

	Length mm (inch)	Width mm (inch)	Height mm (inch)
incl. packing box	1200 (47.28)	800 (31.52)	1460 (57.52)
without packing material (with docking unit and chute)	1070 (42.15)	710 (27.97)	1130 (44.52)

Weight

	Weight approx. kg (lbs)
with packing material	200 (441)
without packing material	135 (297)
with full tanks	165 (364)

5 Machine Standards and Directives

5.1 Safety

Europe

EN 60950 / A11 1997 "Safety of Information Technology Equipment" (identical with IEC 950: 1992 and VDE 0805/ 11. 97)

USA

UL 1950 3. July 1995 "Safety of Information Technology Equipment, Including Electrical Business Equipment"

Canada

CSA 22.2 No. 950 - 95 "Safety of Information Technology Equipment, Including Electrical Business Equipment”

5.2 Radio interference suppression

Europe

In compliance with EN 50081-1: 1992 "Generic Standard for Emission Requirements", (identical with VDE 0839, Part 81-1/ 03. 93)

EN 55011 1998, Class B "Radio Disturbance Characteristics of Medical Equipment" (corresponds to VDE 0878, Part 22 / 04.98)

For equipment in residential areas, business and commercial areas, and in doctors’ offices.

North-America (USA, Canada)

US-Standard FCC 47 Part 15, Subchapter B, Class A / Edition 8/ 1976

Equipment considered “Non-Household Appliances”

5.3 Electromagnetic compatibility

EMVG and EG Regulation 89 / 336 / EEC
EN 50082-1: 1997

EN 61000-3-2 “Limit Values for Harmonic Emissions”
EN 61000-3-3 “Limit Values for Flicker”

5.4 Certificates and guidelines

CE Medical Device Directive	93/42 EEC
TÜV Product Service Mark	“Design tested and monitored”
UL Approbation	E 477 50 (M)
C-UL Approbation	E 477 50 (M)

"Technical directives for drinking water installations, protection against reflux”	DIN 1988, Part 4/ 1988 / EN 1717:2001

General conditions and administrative regulations for minimum requirements on the disposal of waste water into public waters, dated 31.01.1994 **(Germany)**	Appendix 53 – Photographic Processes (silver halide photography)

Ministre de l’environment (France)	Rubrique No. 2950 Maximum water consumption for - single-layer emulsions must not exceed a maximum of 15l/m^2 * - double-sided emulsions must not exceed a maximum of 30l/m^2 * * activated in the program <Service Settings / Replenishment / Wat. Repl. Value>

Controls and Connections

2

Section 2

describes the controls and the connectors of the machine:

- Position and function of the controls
- Layout of the connectors and their modalities

Chapter 2

Contents

1 Control panel 1

2 Switches 2

2.1 Machine switches 2

2.2 Safety switches 3

3 Installation Connections 4

3.1 Installation through the front panel (only for Classic E.O.S. Type 5270/100) 4

3.2 Installation through the bottom 5

3.2.1 Classic E.O.S. (5270/100) 5

3.2.2 Classic E.O.S. CL (5270/105) 6

1 Control panel

Classic E.O.S. Type 5270/100 **Classic E.O.S. CL Type 5270/105**

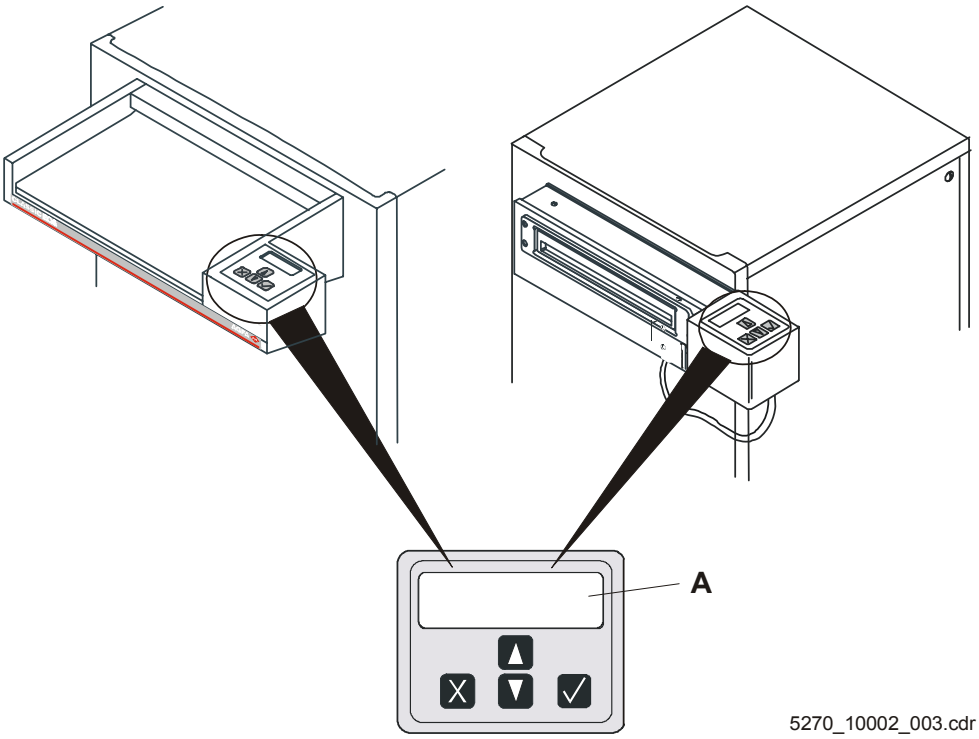

Figure 1

(**A**) LCD
Display window consisting of 2 lines with 16 characters each.

X Back key
Press this key to exit a dialog or a menu. If you press this key in an input window any modifications made in this window will be canceled and reset to the initial values.

▼▲ Selection / Scroll keys
Use these keys to scroll through the options in the menus or to change values in input windows.

✓ Enter / Confirmation key
Use this key to show the options in a menu or to confirm a dialog. A confirmed dialog opens the corresponding input window. Entered data is confirmed and accepted.

2 Switches

2.1 Machine switches

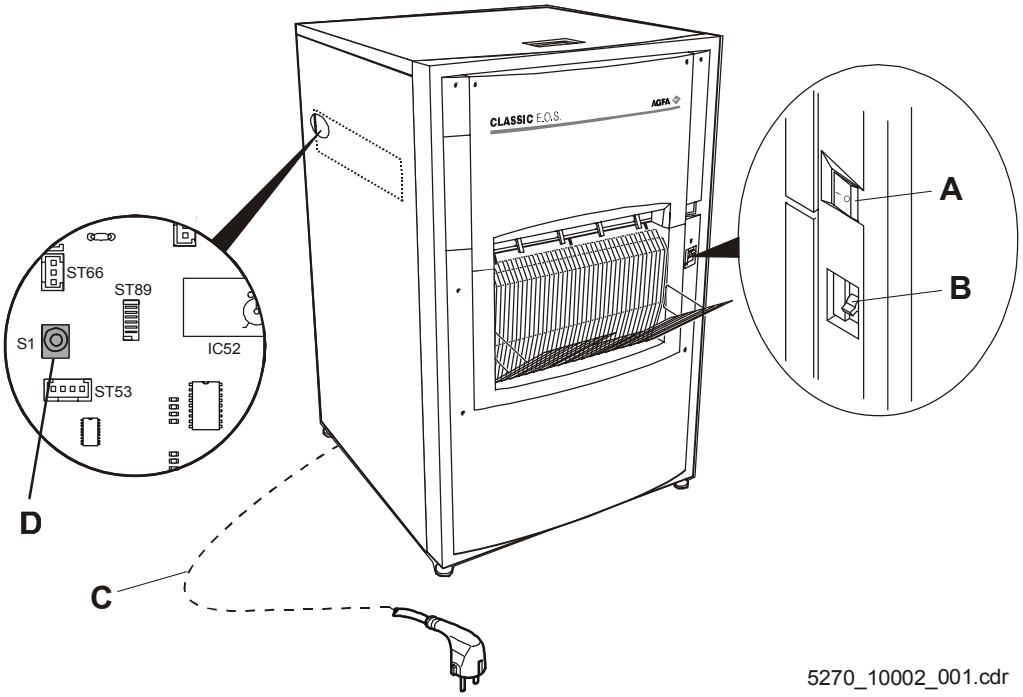

Figure 2

(**A**) Main switch film processor

(**B**) Ground fault interrupter (GFI switch)

(**C**) Mains cable (VDE)

(**D**) Reset key PCB1
CM+952709450_ (F8.5270.7890._)

2.2 Safety switches

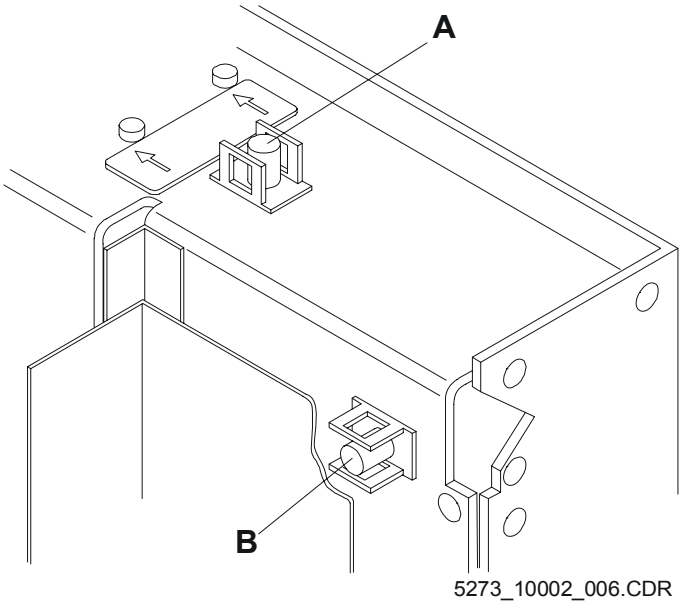

Figure 3

(**A**) 0SW2 Safety switch for machine cover

(**B**) 0SW3 Safety switch for dryer

The machine has two safety switches, which interrupt the circuit when the dryer is opened or the machine cover is removed.

Even with interrupted safety switches 0SW2 (A) and/or 0SW3 (B), and the main switch 0SW1 in off position, there is still voltage applied on the following components as long as the power cord is plugged in:

Ground fault interrupter 0FI

Mains switch 0SW1

3 Installation Connections

3.1 Installation through the front panel (only for Classic E.O.S. Type 5270/100)

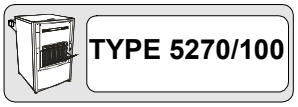

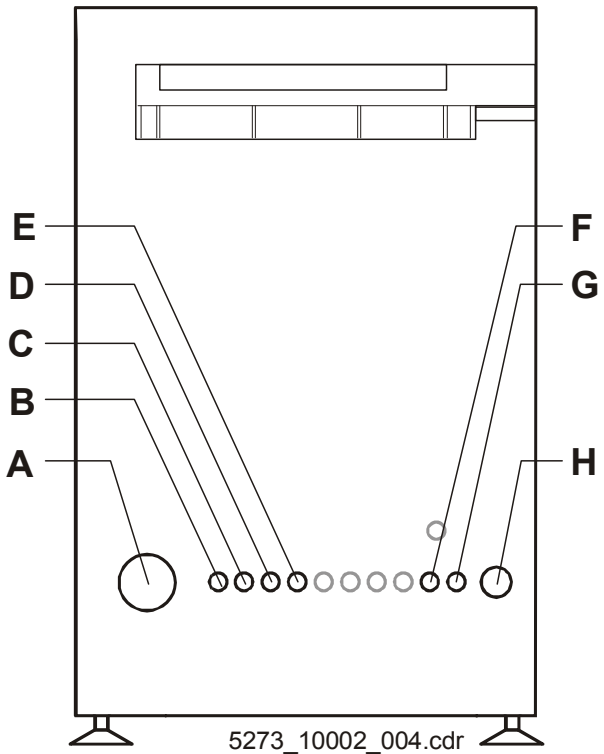

Figure 4

(**A**) Exhaust connection

(**B**) Developer overflow / drain (DEV)

(**C**) Fixer overflow / drain (FIX)

(**D**) Water overflow / drain (WAT)

(**E**) Tank safety overflow (OVERFLOW)

(**F**) Developer supply (DEV)

(**G**) Fixer 2 supply (FIX)

(**H**) Water supply (WAT)

3.2 Installation through the bottom

3.2.1 Classic E.O.S. (5270/100)

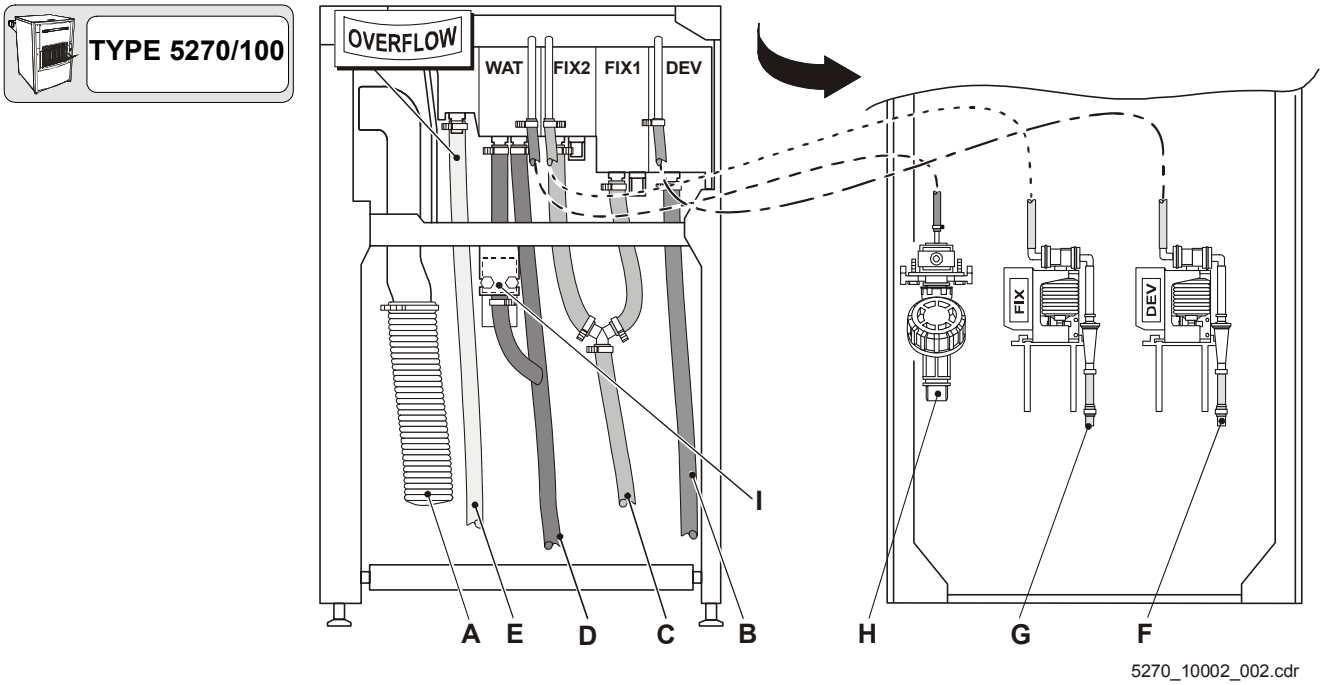

Figure 5

(**A**) Exhaust connection

(**B**) Developer overflow / drain (DEV)

(**C**) Fixer overflow / drain (FIX)

(**D**) Water overflow / drain (WAT)

(**E**) Tank safety overflow (OVERFLOW)

(**F**) Developer supply (DEV)

(**G**) Fixer 2 supply (FIX)

(**H**) Solenoid valve (and filter) water supply

(**I**) Solenoid valve water drain (anti-algae)

3.2.2 Classic E.O.S. CL (5270/105)

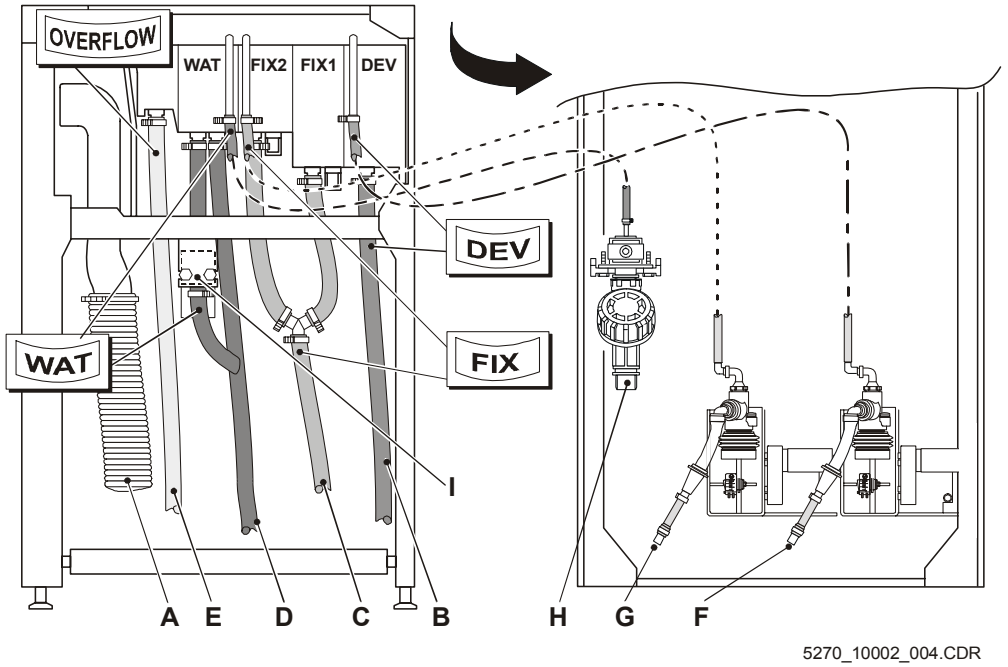

Figure 6

(**A**) Exhaust connection

(**B**) Developer overflow / drain (DEV)

(**C**) Fixer overflow / drain (FIX)

(**D**) Water overflow / drain (WAT)

(**E**) Tank safety overflow (OVERFLOW)

(**F**) Developer supply (DEV)

(**G**) Fixer 2 supply (FIX)

(**H**) Solenoid valve (and filter) water supply

(**I**) Solenoid valve water drain (anti-algae)

Installation / Machine Start-up

3

Section 3

describes the exact routines necessary to start the machine operation.
Before putting the machine in operation you should be familiar with the information of section 2 (controls and connectors).

Chapter 3

Contents

1 Notes on the Installation and Startup Procedures 1

2 Removal of Transport Protections 2

3 Installation 3

3.1 Height coarse adjustment 3

3.2 Height fine adjustment 4

4 Power Cable Adaptation 5

5 Daylight / Darkroom Installation (only Classic E.O.S. Type 5270/100) 6

5.1 Machine in the daylight, film feed in the darkroom, light seal at the darkroom feed table 6

5.1.1 Installation at the wall opening 6
5.1.2 Installation with light tight wall 7

5.2 Machine in the darkroom, film exit in the daylight, light seal at the dryer with light tight wall 8

5.2.1 Installation at the wall opening with light tight wall 8
5.2.2 Light tight wall 9

6 Supply and Disposal Connections 10

6.1 Installation diagram 10

6.2 Overview of supply and disposal 11

6.2.1 Classic E.O.S. (5270/100) 11
6.2.2 Classic E.O.S. CL (5270/105) 12

6.3 Supply and disposal hoses 13

6.3.1 Hoses inside the machine 13
6.3.2 Hoses outside the machine 13

6.4 Supply and disposal through the lower front panel (only Classic E.O.S. Type 5270/100) 14

6.4.1 Instructions for breaking out the openings 14
6.4.2 Required openings for standard installations 14
6.4.3 Installing the exhaust connection 15
6.4.4 Installing the developer / fixer supply hoses 16
6.4.5 Installing the disposal hoses 18

6.5 Supply and disposal through the floor 19

6.5.1 Installing the exhaust connection 19
6.5.2 Installing supply hoses 21
6.5.3 Installing the disposal hoses 24

7 Connecting the Level Sensors 25

7.1 Replenisher tanks 25
7.1.1 Connect the level sensors of the replenisher tanks 25
7.1.2 Set the code for the replenisher tank level connection 25

7.2 Mixer 26
7.2.1 Connecting the Mixer communication cable 26
7.2.2 Set the code of the mixer communication 26

7.3 Disposal tanks 27
7.3.1 Connect the level sensors of the disposal tanks 27
7.3.2 Set the code for the disposal tank level sensors 27

8 Adjusting Volume, Brightness, and Contrast on the Control Board PCB1 28

9 Starting Operation 29

9.1 Preparing the startup procedure 29

9.2 Adapting the mains supply 29

9.3 Checking the function of the GFI switch 0FI 30

9.4 Filling the developer and fixer tanks 31
9.4.1 Manual filling (in Type 5270/100 and Type 5270/105) 31
9.4.2 Automatic filling with the AUTOFILL function (only in Type 5270/105) 32

9.5 Switching on the machine 32

9.6 Calibrating the replenishment rate of developer and fixer upon first startup 33

9.7 Reset after switching on the machine 37

9.8 BASEINIT 38
9.8.1 Only execute a BASEINIT in case of: 38
9.8.2 Initiate a BASEINIT: 38

9.9 System settings 39
9.9.1 Setting the software switches in the SERVICE program 39
9.9.2 Setting the process parameters on the control panel 39
9.9.3 Access to the SERVICE program 41
9.9.4 Setting date and time 41
9.9.5 Setting the service intervals in the SERVICE program 42
9.9.6 Executing a <Teach In> in the SERVICE program 43
9.9.7 Calibrating the Developer Temperature (CAL) 45
9.9.8 Resetting the temporary infocounters in the SERVICE program 46
9.9.9 Display all <Service Settings> in the SERVICE program with <Quick Display> 47
9.9.10 Setting the customer specific settings in the SERVICE program <Service Settings> 48
9.9.11 DEFAULT settings ex factory / after BASEINIT 56
9.9.12 Processes 56
9.9.13 Process data 57
9.9.14 Application dependent process parameter 57

1 Notes on the Installation and Startup Procedures

The manufacturer tested this machine with chemicals and film material. Therefore any possible traces of chemicals do not indicate a used machine but they are the proof of a function-tested and perfect machine.

The sequence of listed installation steps depends on the following parameters:

- Size of the installation room
- Type of installation:
  Daylight / darkroom installation
  Light seal feed table / dryer directly against installation wall or light-tight wall
- Supply / disposal connections through the lower front panel or below the machine
- Machine standing free in the room or with the left hand machine side at a distance from the wall of at least 15 cm (5.91 inch)

Please go through these procedures and arrange a sequence required for your installation.

The sequence described below corresponds to a standard installation with the following parameters:

- Film feed in the darkroom, machine in the daylight
  Light seal at the film feed table without / with light tight wall
- Film feed / machine in the darkroom, film exit in the daylight
  Light seal with light-tight wall behind the dryer / film exit
- Installation connections through the lower front panel (below the film feed table)
- Installation connections through the floor
- Machine with the left hand machine side at a distance from the wall of at least 15 cm (5.91 inch)

2 Removal of Transport Protections

(1) Undo 2 screws on the dryer panels and remove the dryer panels, open the dryer flap.

(2) Remove the transport protection from the dryer.

(3) Remove the transport protection from the film transport flap (only in Type 5270/105).

(4) Close the dryer flap and dryer panels, tighten the screws of the dryer panels.

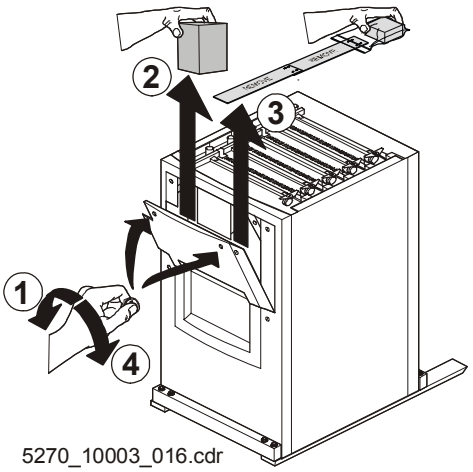

5270_10003_016.cdr

Figure 1

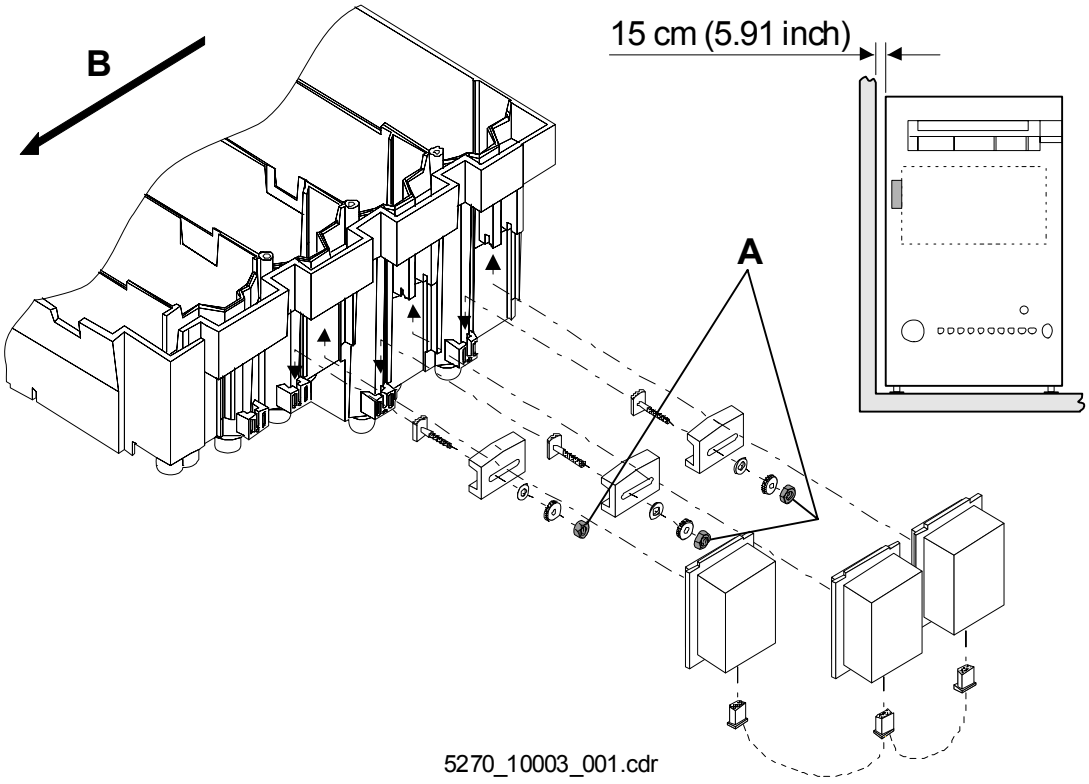

5270_10003_001.cdr

Figure 2

(A) Lock nuts
(B) Film transport direction

- If a machine is installed with the left hand side only 15 cm (5.91 inch) from the wall, the lock nuts (A) must be removed during installation to make the maintenance easier.

3 Installation

Wrench (Ø 17 mm)

3.1 Height coarse adjustment

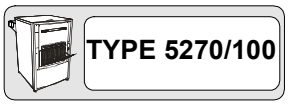

- Slacken the lock nuts (A).
- Adjust the hex nuts (B) to a height of 30 mm (1.18 inch). Clockwise = higher Counterclockwise = lower
- Adjust the height of the adjustable machine feet to level the machine.

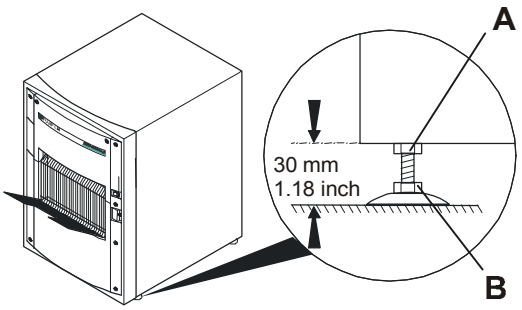

5273_10003_002.cdr

Figure 3

3.2 Height fine adjustment

The fine adjustment should only be made when the machine is at its final installation site.

A poorly adjusted machine installation may result in film processing errors!

Measure in film transport direction:

- Remove the machine cover.
- Remove the crossovers above the racks.
- Place a spirit level (A) on the upper tie rod of the fixer rack (3) and the water rack (4). Adjust the height of the rear and front feet until the machine is level in transport direction.

Measure across film transport direction:

- Place a second spirit level (B) on the upper tie rods of the developer rack (1) and then on the tie rods of the water rack (4).
- Adjust the foot height left and right.
- Readjust the height of the rear and front feet.
- Check the adjustment in and across the film transport direction, and readjust if necessary.

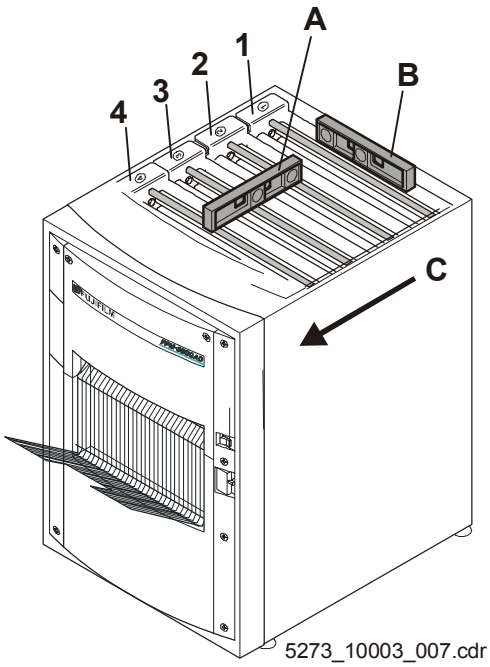

Figure 4

(A/B) Spirit level
(C) Film transport direction
(1) Developer rack
(2) Fixer rack1
(3) Fixer rack2
(4) Water rack

4 Power Cable Adaptation

Ex-factory the machine configuration includes a VDE cable.

If there are only UL/CSA connections available the VDE power cable must be replaced by the UL/CSA cable enclosed in the accessory box.

The power cable must only be exchanged when the film processor has no power supply. The installed power cable must not be plugged into an outlet!

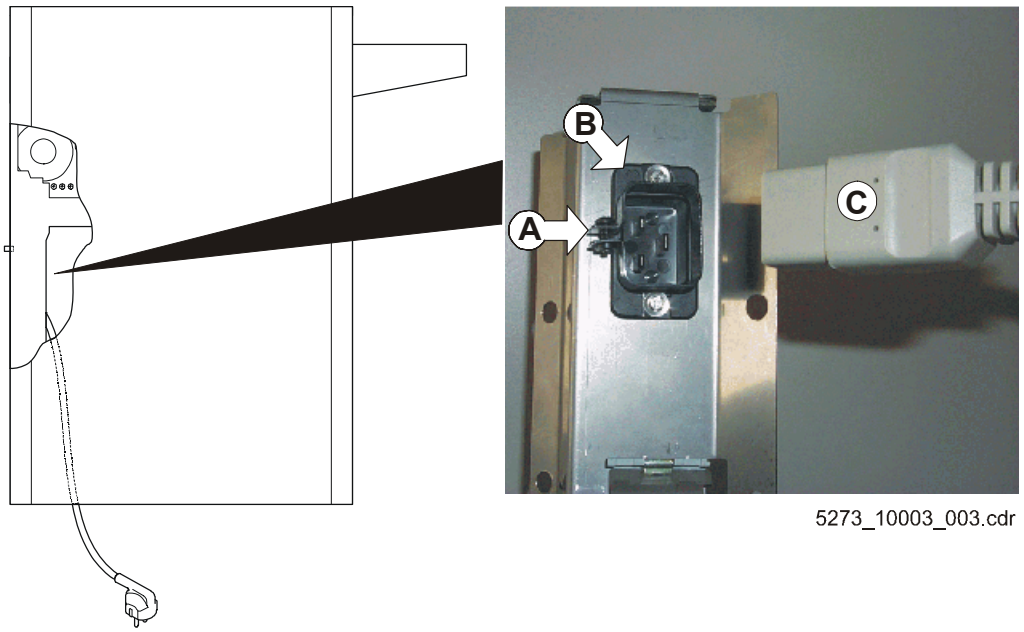

Figure 5

- Replace the VDE power cable by the UL/CSA cable.

- **Make sure** to tighten clamping screw (A) if plug (B) is connected in outlet (C).

5 Daylight / Darkroom Installation (only Classic E.O.S. Type 5270/100)

For installation of the Classic E.O.S CL Type 5270/105 please refer to the installation instructions in Chapter 9: Accessories and Options.

5.1 Machine in the daylight, film feed in the darkroom, light seal at the darkroom feed table

5.1.1 Installation at the wall opening

① Film feed
② Film output (wire chute)
③ A 60° chamfer must be provided on the wall opening
④ Wall
⑤ Wall base
⑥ Light seal
(foam rubber – by the meter)
Order no. CM+0000014259

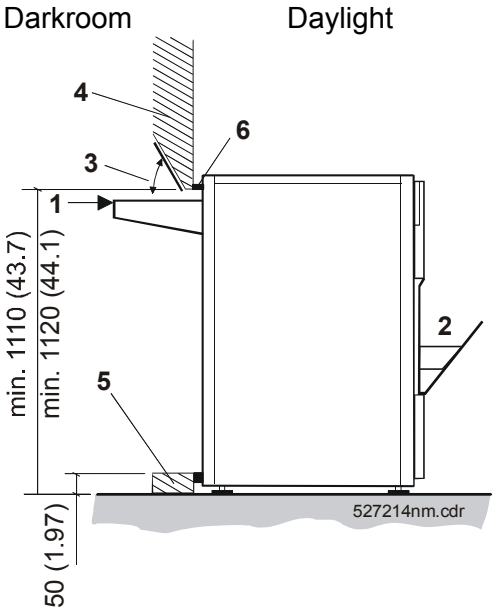

Figure 6

Dimensions in **mm (inch)**

Wall opening:

① Wall
② Wall base
③ Wall opening

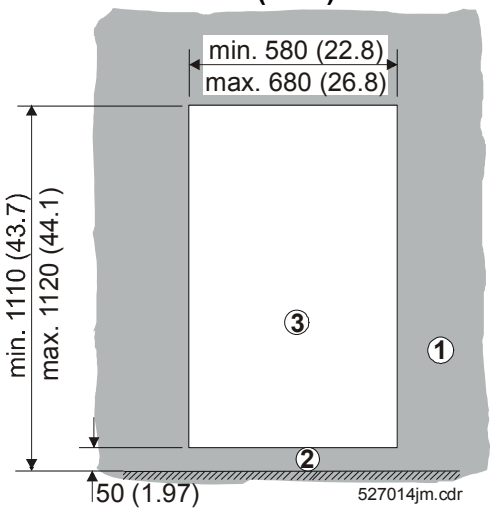

Figure 7

Dimensions in **mm (inch)**

5.1.2 Installation with light tight wall

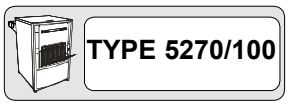

① Film feed
② A 60° chamfer must be provided on the wall opening.
③ Wall
④ Light tight wall
⑤ Film output (wire chute)
⑥ Wall base
⑦ Light seal
(foam rubber – by the meter)
Order no. CM+0000014259

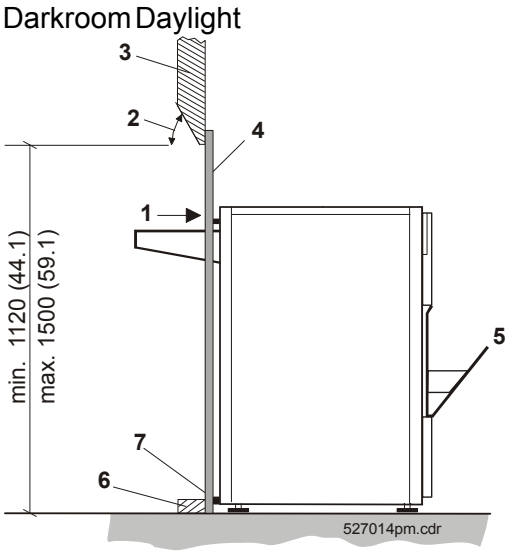

Figure 8

Dimensions in **mm (inch)**

Wall opening

① Wall
② Wall overlap
③ Wooden board, 20 mm (0.79 inch), with opening

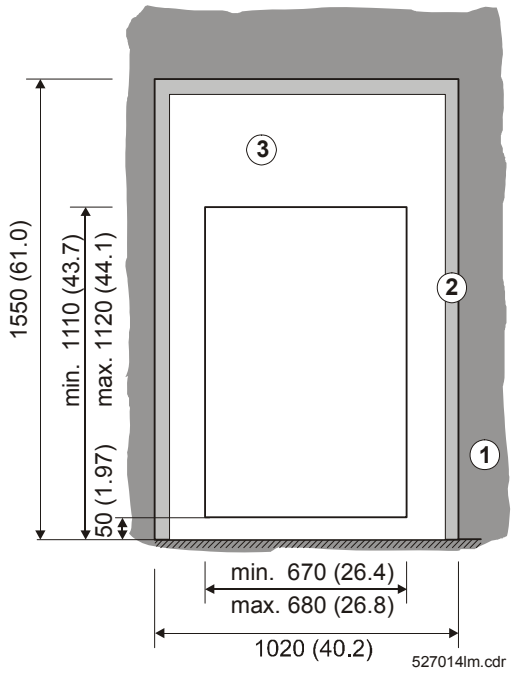

Figure 9

Dimensions in **mm (inch)**

See Chapter 3, Section 5.2.2 Light tight wall

5.2 Machine in the darkroom, film exit in the daylight, light seal at the dryer with light tight wall

5.2.1 Installation at the wall opening with light tight wall

① Film feed
② Wall
③ A 60° chamfer must be provided on the wall opening.
④ Light tight wall
⑤ Film output (wire chute)
⑥ Light seal
(foam rubber – by the meter)
Order no. CM+0000014259
⑦ Wall base

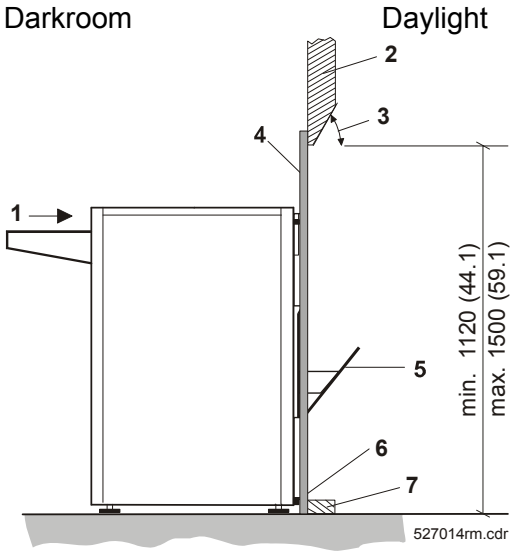

Figure 10

Dimensions in **mm (inch)**

Wall opening

① Wall
② Wall overlap / light tight wall overlapping by at least 50 mm (1.97 inch) on all sides
③ Wooden board, 20 mm (0.79 inch), with opening

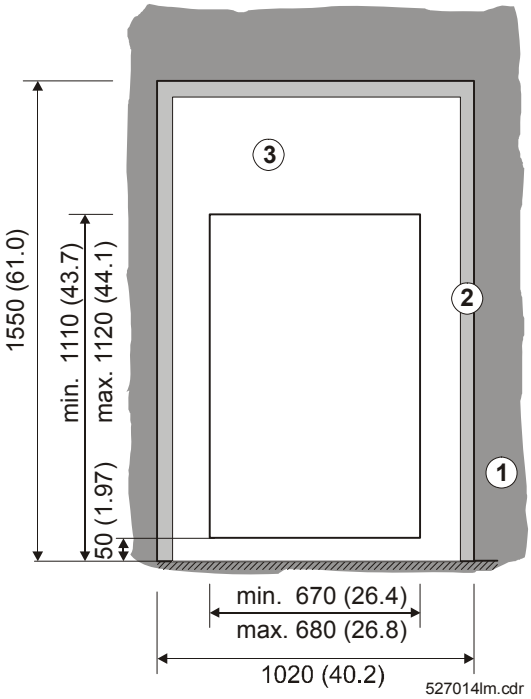

Figure 11

Dimensions in **mm (inch)**

See Chapter 3, Section 5.2.2 Light tight wall

5.2.2 Light tight wall

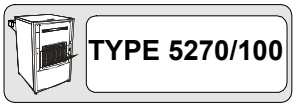

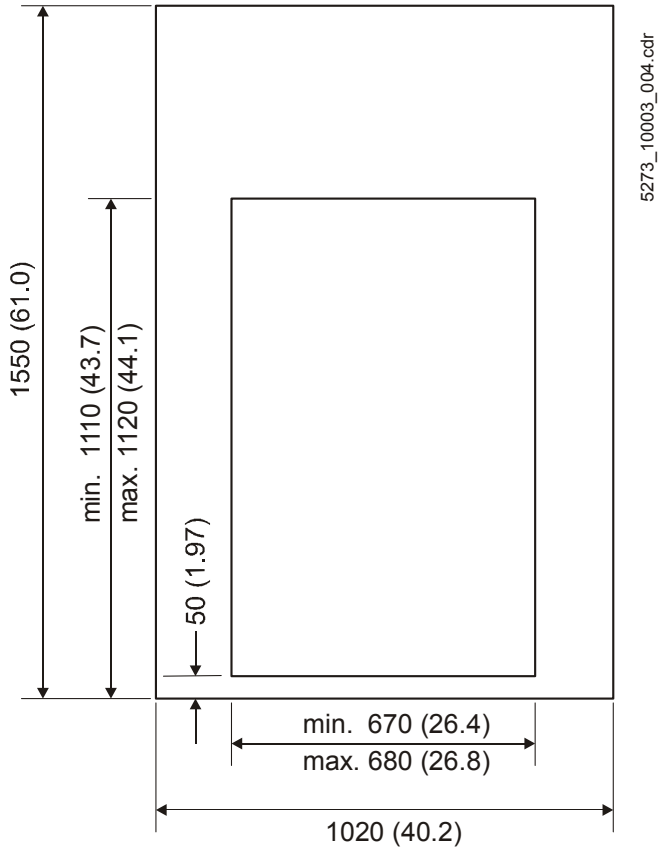

Dimensions in **mm (inch)**

Figure 12

Coverage of a wall opening of up to 1500 mm x 920 mm
(57.09 inch x 36.22 inch) is possible.
An overlap of 50 mm (1.97 inch) must be guaranteed on all sides.

The manufacturer does not supply the light tight wall (wooden board) required for the installation of a film processor!

6 Supply and Disposal Connections

6.1 Installation diagram

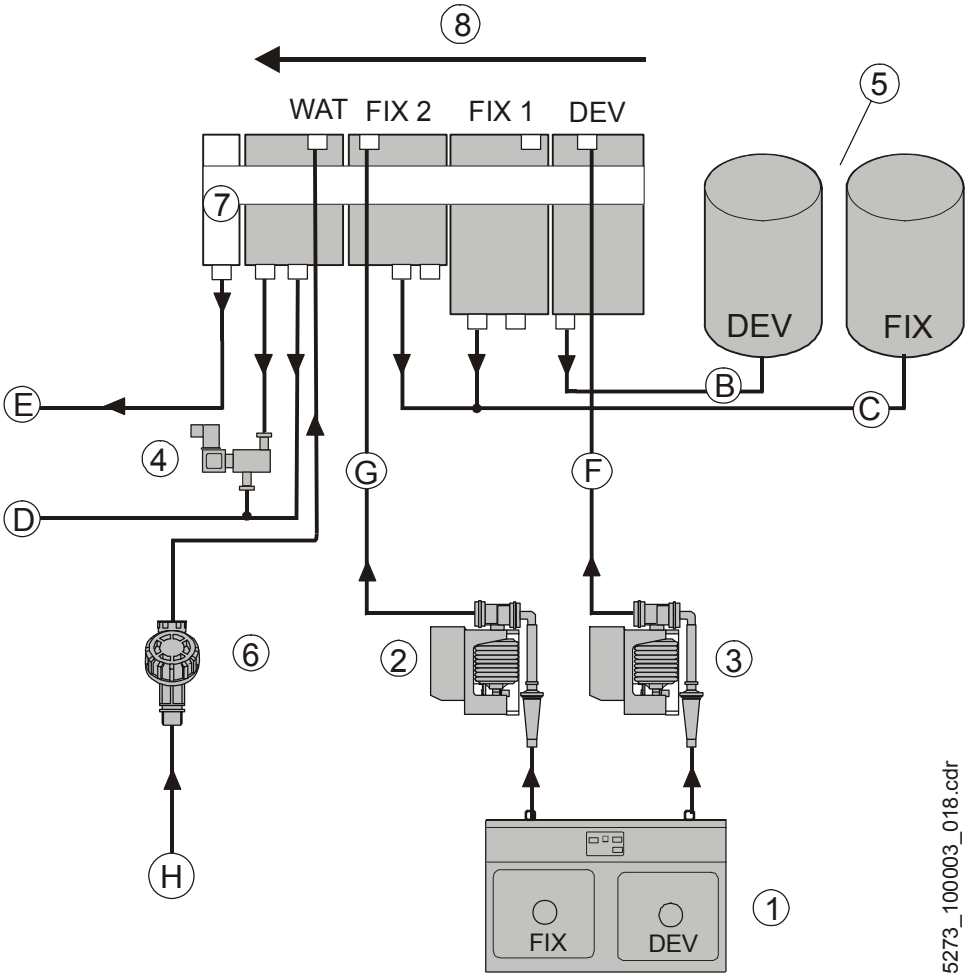

Figure 13

(D)	Water overflow / drain (WAT)	(1)	Mixer
(E)	Tank safety overflow (OVERFLOW)	(2)	Fixer replenishment pump
		(3)	Developer replenishment pump
(C)	Fixer overflow / drain (FIX)	(4)	Solenoid valve water drain
(B)	Developer overflow / drain (DEV)	(5)	Individual disposal tanks or centralized disposal
(G)	Fixer 2 supply (FIX)	(6)	Solenoid water supply (anti-algae)
(F)	Developer supply (DEV)	(7)	Overflow tray
(H)	Water supply (WAT)	(8)	Film transport direction

The connections of supply and disposal hoses may be at the bottom (through the floor) or in the front (through the front panel – only for Type 5270/100).

6.2 Overview of supply and disposal

6.2.1 Classic E.O.S. (5270/100)

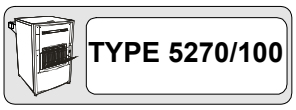

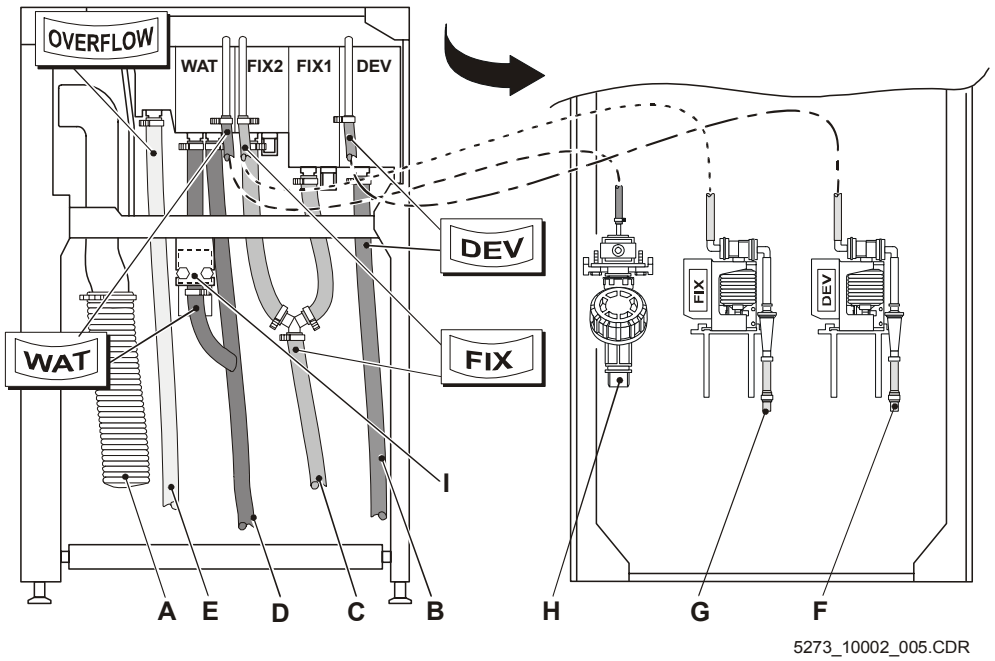

Figure 14

(A) Exhaust connection
(B) Developer overflow / drain (DEV)
(C) Fixer overflow / drain (FIX)
(D) Water overflow / drain (WAT)
(E) Tank safety overflow (OVERFLOW)
(F) Developer supply (DEV)
(G) Fixer 2 supply (FIX)
(H) Solenoid valve (and filter) water drain (WAT)
(I) Solenoid water supply (anti-algae)

6.2.2 Classic E.O.S. CL (5270/105)

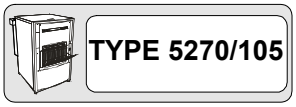

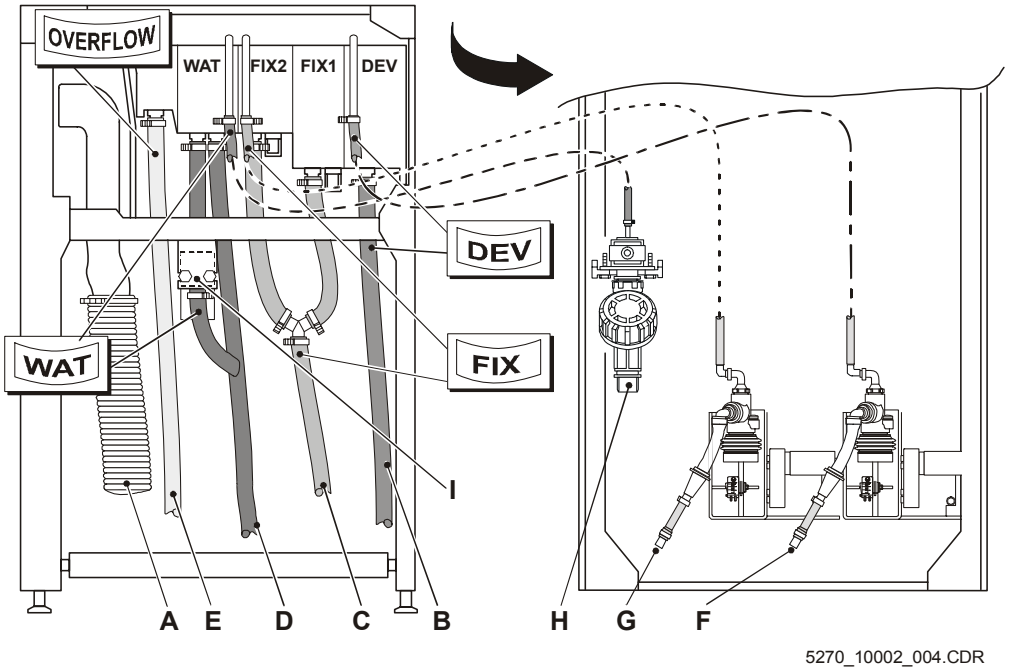

Figure 15

(A) Exhaust connection
(B) Developer overflow / drain (DEV)
(C) Fixer overflow / drain (FIX)
(D) Water overflow / drain (WAT)
(E) Tank safety overflow (OVERFLOW)
(F) Developer supply (DEV)
(G) Fixer 2 supply (FIX)
(H) Solenoid valve (and filter) water drain (WAT)
(I) Solenoid water supply (anti-algae)

6.3 Supply and disposal hoses

6.3.1 Hoses inside the machine

Internal hoses are pre-installed.

The supply and disposal hoses for developer, fixer, water, and safety overflow in the machine are marked by tapes:

DEV	= developer	**WAT**	= water
FIX	= fixer	**OVERFLOW**	= safety overflow

Tapes to be wrapped around external hoses are included in the accessory box.

6.3.2 Hoses outside the machine

External hoses can be ordered by the meter.

For the installation of external hoses only use fiber-reinforced hoses!

The following hoses are to be used for the supply connections:

Supply connection	Color	Dimensions (mm / inch)	Order number
Developer	red (DEV)	10x3 / 0.39x0.12 fiber-reinforced	CM+0000064082
Fixer	blue (FIX)	10x3 / 0.39x0.12 fiber-reinforced	CM+0000064083

The following hoses are to be used for the disposal connections:

Disposal connection	Color	Dimensions (mm / inch)	Order number
Developer	red (DEV)	19x4 / 0.75x0.16 fiber-reinforced	CM+0000064133
Fixer	blue (FIX)	19x4 / 0.75x0.16 fiber-reinforced	CM+0000064134
Water safety overflow	transparent (WAT)	19x4 / 0.75x0.16 fiber-reinforced	CM+0000007620

The accessory box includes an approx. 50 cm (19.69 inch) long PAP hose **for the exhaust connection**.

The PAP hose (Ø 100 mm / Ø 3.94 inch) can be ordered by the meter:

Order number CM+0000064117

6.4 Supply and disposal through the lower front panel (only Classic E.O.S. Type 5270/100)

6.4.1 Instructions for breaking out the openings

It is **not** necessary to remove the front panel in order to break out the openings.

- Mark the recesses to be broken out with a felt-tip marker.
- The recessed material can be broken out with a screwdriver applied in the groove at the outside and a blow with the hammer.

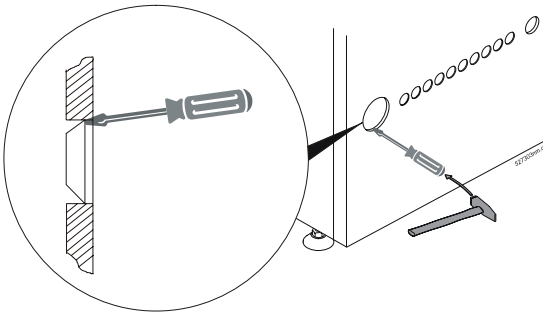

Figure 16

6.4.2 Required openings for standard installations

(A) Exhaust connection
(B) Developer overflow / drain
(C) Fixer overflow / drain
(D) Water overflow / drain
(E) Safety overflow, tanks
(F) Developer supply
(G) Fixer 2 supply
(H) Water supply

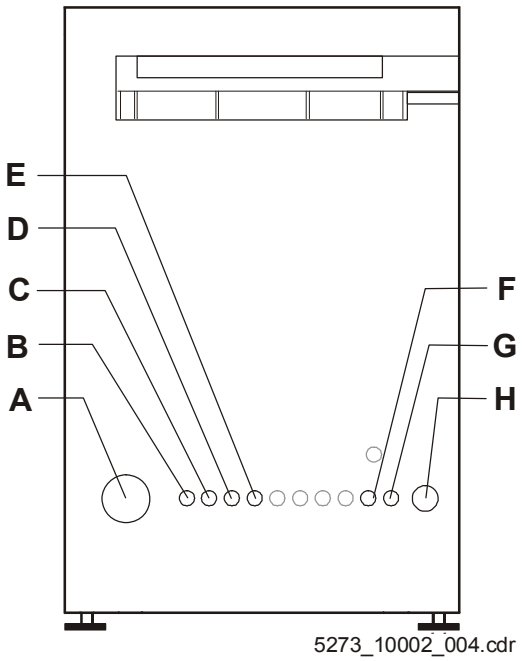

Figure 17

6.4.3 Installing the exhaust connection

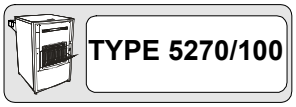

The machine internal exhaust must always be guided out of the machine.

- The film processor has an integrated exhaust duct (A). Crossover (B) and the flexible exhaust hose (C) (∅ 100 mm / 3.94 inch) are pre-mounted and included in the accessory box.
- Exhaust connection: ∅ 100 mm (3.94 inch)
- Max. length of the exhaust hose: 5 m (196.85 inch) (if this length is exceeded install an additional fan!)
- Exhaust volume: min. 50 m³/h, max. 100 m³/h

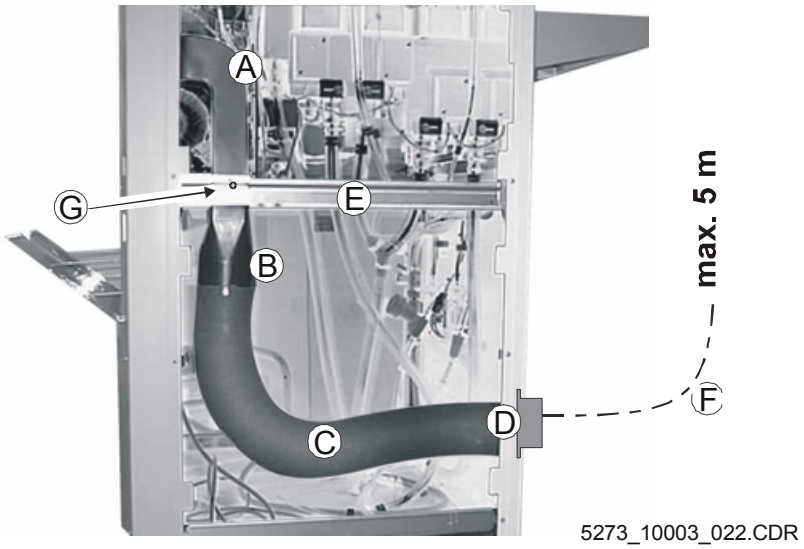

Figure 18

(A) Exhaust duct
(B) Crossover
(C) Flexible exhaust hose inside
(D) Exhaust connection stub
(E) Frame
(F) Exhaust duct to the room exhaust (PAP hose)
(G) Mounting screw for crossover (B)

- Break out the recess for the exhaust connection (Figure 17).
- Screw the exhaust connection stub (D) to the front panel using the 3 Phillips screws included in the accessory box.
- Loosen the mounting screw (G) located between the exhaust duct (A) and frame (E).
- Push the crossover section (B) onto the exhaust duct.
- Mount both ducts on the frame with mounting screw (G).
- Push the exhaust hose (C) onto the exhaust connection stub (D) integrated inside the front panel.
- Push exhaust hose (F) on the exhaust connection stub (D) and connect it to the room exhaust.

6.4.4 Installing the developer / fixer supply hoses

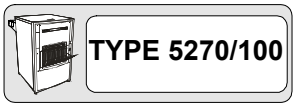

Only use **fiber-reinforced** PVC hoses Ø 10x3 mm (0.39x0.12 inch) for the external hose connections (outside the machine)!

Position the hoses **without kinks**!

Installing the developer / fixer supply:

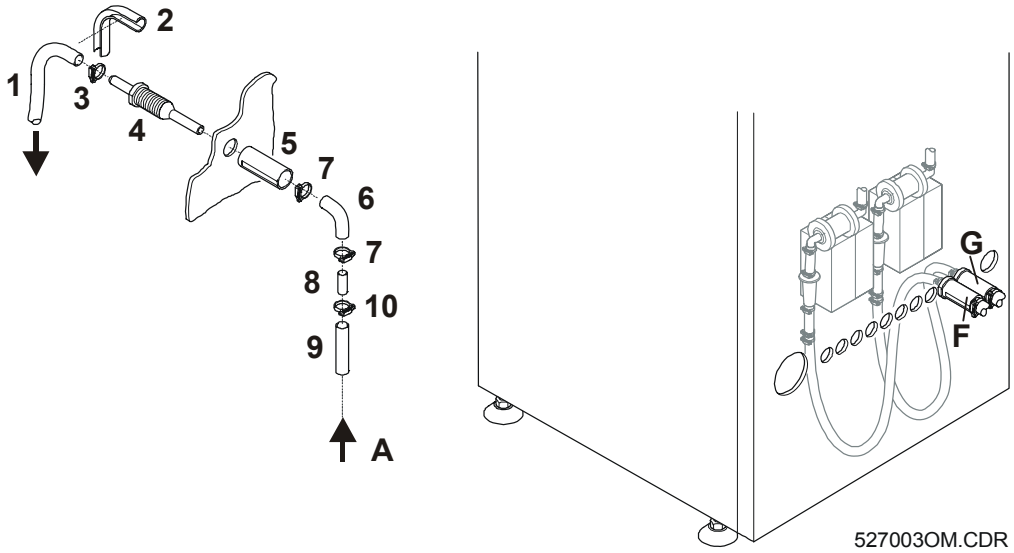

Figure 19

(F) Developer (DEV) (A) Supply direction
(G) Fixer (FIX)

POS	Designation	Configuration
1	PVC hose Ø 9x1.5 mm (0.35x0.06 inch)	Pre-installed in the machine
2	Hose positioning / reinforcement bend-protection	Not included in shipment, can be ordered, CM+7946064580
3	Hose clamp	Pre-installed in the machine
4	Hose connection stub	
5	Threaded bush	Included in the accessory box
6	Rubber elbow Ø 10 mm (0.39 inch)	Not included in shipment, can be ordered, CM+9511017970
7	Hose clamp	Not included in shipment, can be ordered, CM+7037200210
8	Pipe stub Ø 10x1 mm (0.39x0.04 inch)	Not included in shipment, can be ordered, CM+9511017920
9	PVC hose Ø 10x3 mm (0.39x0.12 inch) fiber-reinforced Developer: red, Fixer: blue	Not included in the shipment, can be ordered, CM+0000064082 CM+0000064083
10	Hose clamp	Not included in shipment, can be ordered, CM+9037200230

Install the water pressure hose:

TYPE 5270/100

For installation of the water pressure hose refer also to Chapter 14.

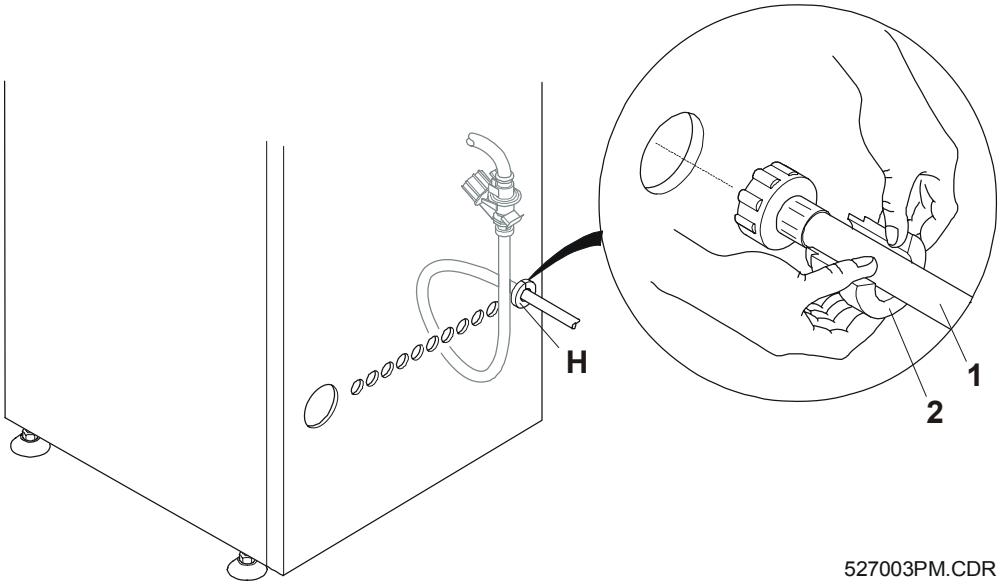

Figure 20

POS	Designation	Configuration
1	Safety pressure hose	Pre-installed
2	Rubber hose passage / light seal	Included in the accessory box

- Position the water pressure hose through the front panel (H).

- Connect the union nut (A) on the water pressure hose together with the dirt filter (B).
- Tighten the union nut (A) with a pipe wrench (tightness!).
- Connect the safety pressure hose with the water supply.

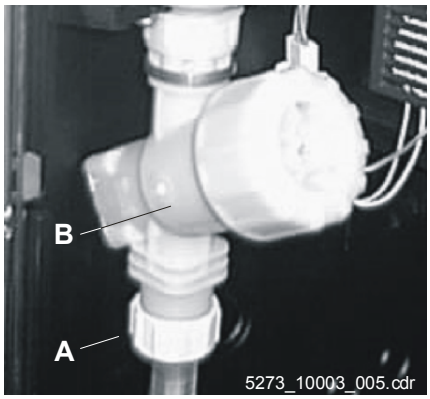

Figure 21

If a pressure reducer is included in the installation, set the pressure to 2-6 bar.

6.4.5 Installing the disposal hoses

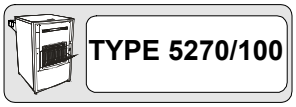

Only use **fiber-reinforced** PVC hoses Ø 19x4 mm (0.75x0.16 inch) for the external hose connections (outside the machine)!

Position the hoses **without kinks**!

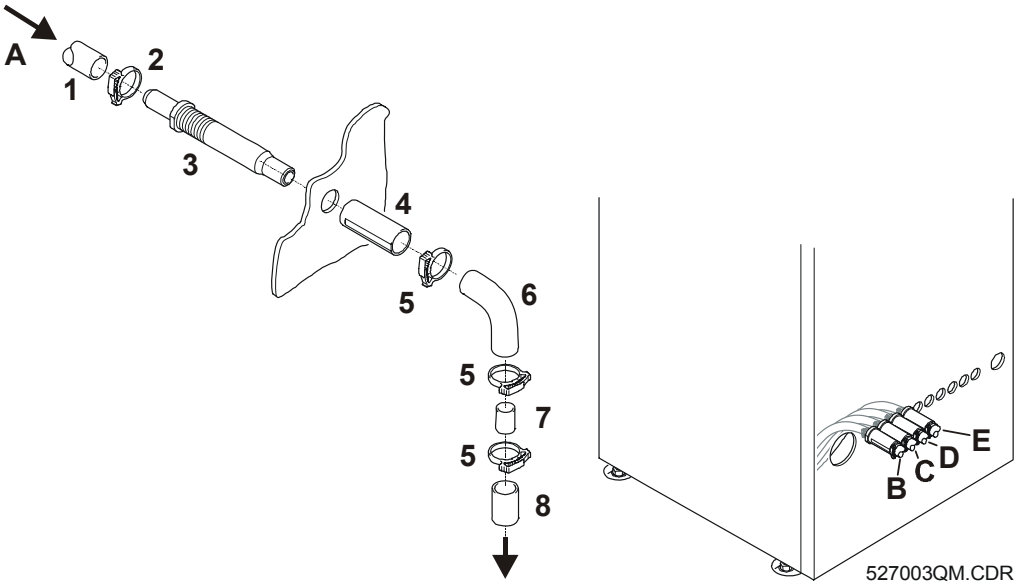

Figure 22

(A) Drain direction
(B) Developer drain / overflow
(C) Fixer drain / overflow
(D) Water drain / overflow
(E) Safety overflow, tanks

Pos	Designation	Configuration
1	PVC hose Ø 19x2.5 mm (0.75x0.10 inch) transparent	Pre-installed in the machine
2	Hose clamp	
3	Hose connection stub Ø 20 mm (0.79 inch)	
4	Threaded bush	Included in the accessory box
5	Hose clamp	Not included in shipment, can be ordered, CM+9037200400
6	Rubber elbow	Not included in shipment, can be ordered, CM+9889629521
7	Pipe stub Ø 20 mm (0.79 inch)	Not included in shipment, can be ordered, CM+7839185010
8	PVC hose, Developer (red, fiber-reinforced): Ø 19x4 mm (0.75x0.16 inch) Fixer (blue, fiber-reinforced): Ø 19x4 mm (0.75x0.16 inch) Water (transparent, fiber-reinforced): Ø 19x4 mm (0.75x0.16 inch)	Not included in shipment, can be ordered CM+0000064133 CM+0000064134 CM+0000007620

- Combine the hoses of the safety overflow (OVERFLOW) and water (WAT) with a Y piece and connect them with one drain hose, if this is permitted by the local regulations. Install the drain hose to the floor drain.

6.5 Supply and disposal through the floor

6.5.1 Installing the exhaust connection

The machine internal exhaust must always be guided out of the machine.

- The film processor has an integrated exhaust duct (A). Crossover (B) and the flexible exhaust hose (C) (∅ 100 mm / 3.94 inch) are pre-mounted and included in the accessory box.
- Exhaust connection: ∅ 100 mm (3.94 inch)
- Max. length of the exhaust hose: 5 m (196.85 inch) (if this length is exceeded install an additional fan!)
- Exhaust volume: min. 50 m³/h, max. 100 m³/h

(A) Exhaust duct
(B) Crossover
(C) Flexible exhaust hose inside
(D) On-site exhaust pipe
(F) Exhaust connection stub
(G) Hose clamp
(H) Floor (core hole for exhaust connection: ∅ ≥ 114 mm (4.49 inch))

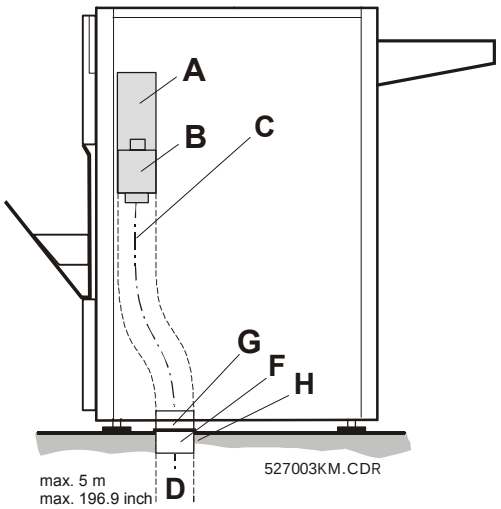

Figure 23

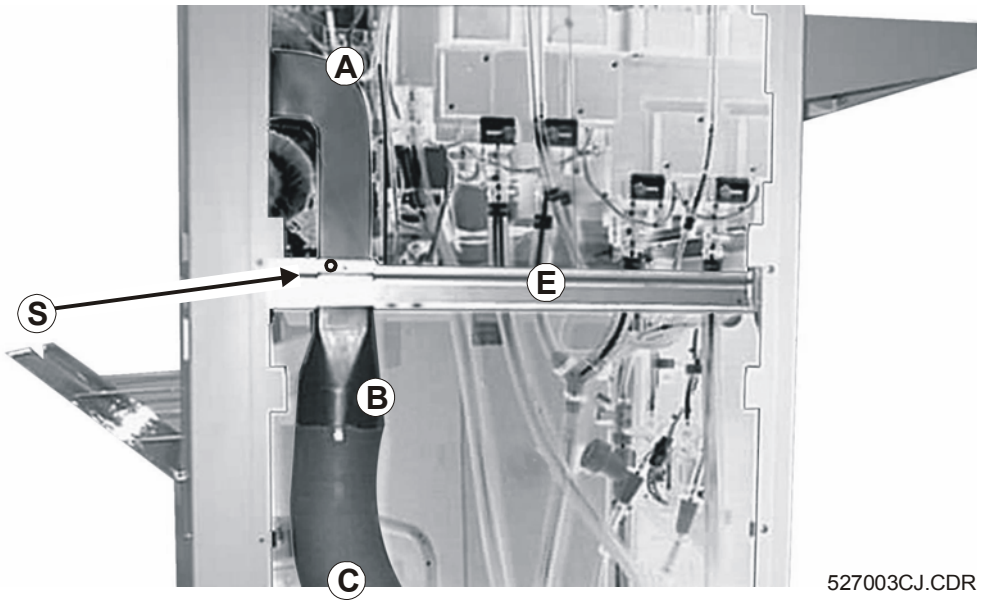

Figure 24

- Loosen the mounting screw (S).
- Push the crossover section (B) onto the exhaust duct (A).
- Tighten the mounting screw (S).
- Frame (E)

- Connect the exhaust hose (C) on the exhaust stub (F) and fix with a hose clamp (G).
- Connect the on-site exhaust pipe (D) on the exhaust stub (F) and fix with a hose clamp (G).
- Tighten the screw connection of the two exhaust stubs (F).

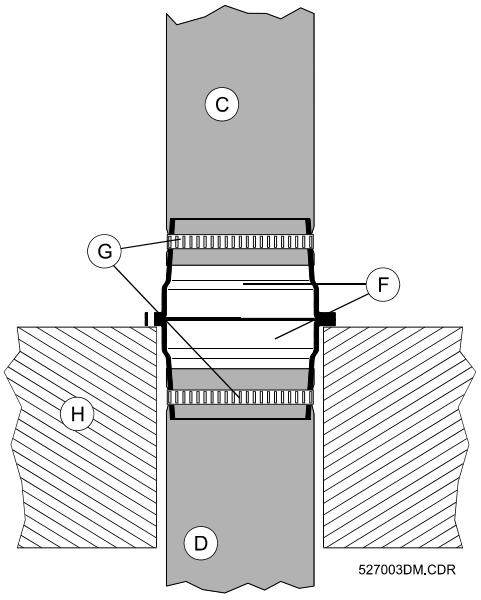

Figure 25

This installation requires an additional exhaust stub Ø 100 (F)
CM+9522030091

6.5.2 Installing supply hoses

Only use **fiber-reinforced** PVC hoses Ø 10x3 mm (0.39x0.12 inch) for the external hose connections (outside the machine)!

Position the hoses **without kinks**!

Classic E.O.S. (5270/100)

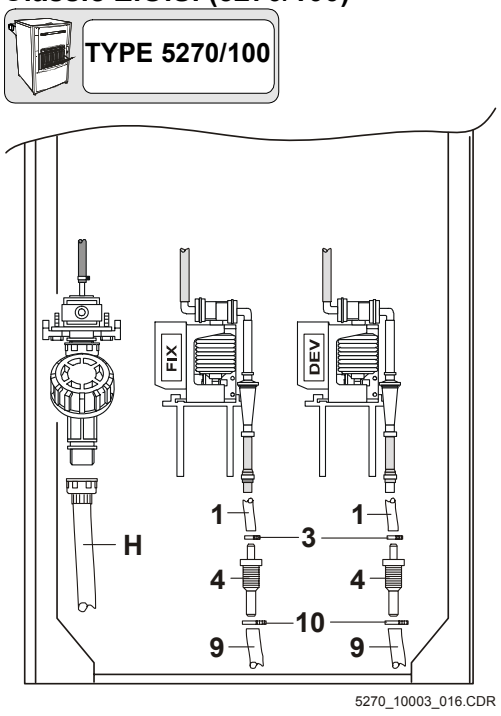

Figure 26

Classic E.O.S. CL (5270/105)

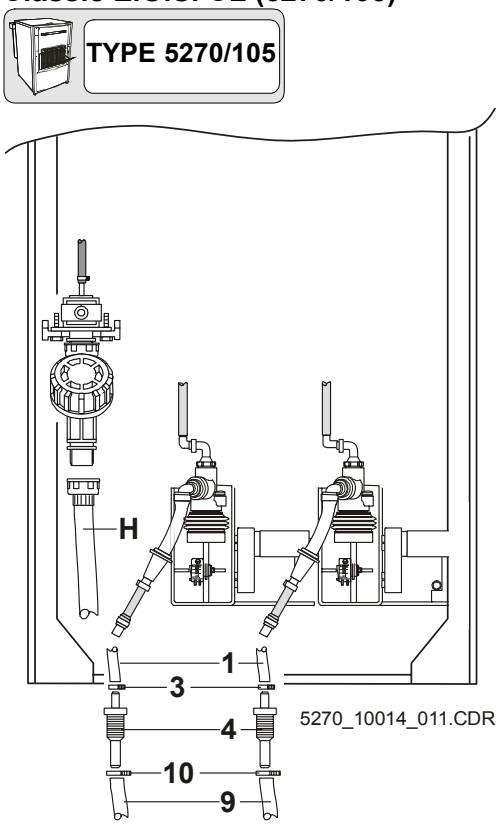

Figure 27

POS	Designation	Configuration
1	PVC hose Ø 9x1.5 mm (0.35x0.06 inch)	Pre-installed in the machine
3	Hose clamp	
4	Hose connection stub	
10	Hose clamp	Not included in shipment, can be ordered, CM+9037200230
9	PVC hose Ø 10x3 mm (0.39x0.12 inch) fiber-reinforced Developer: red Fixer: blue	Not included in the shipment, can be ordered, CM+0000064082 CM+0000064083
H	Safety pressure hose	Pre-installed

- If necessary shorten the internal supply hoses and insert the hose connection again.
- Connect the fiber-reinforced (external) PVC hoses with the hose connection of the internal supply hoses.
- Position the hoses together through the opening in the bottom to the mixer or to the individual tanks.

Install the water pressure hose

For installation of the water safety pressure hose refer also to Chapter 14, Section 8.

- Connect the union nut (A) on the safety pressure hose together with the dirt filter (B).
- Tighten the union nut (A) with a pipe wrench (tightness!).
- Connect the safety pressure hose with the water supply.

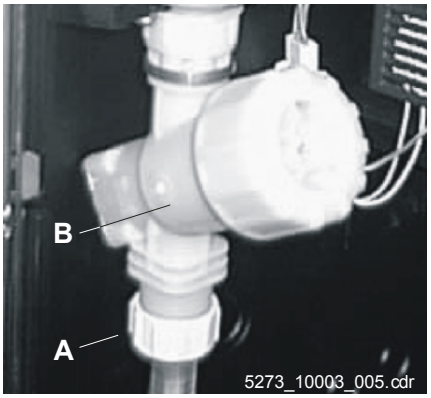

Figure 28

If a pressure reducer is included in the installation, set the pressure to 2-6 bar.

6.5.3 Installing the disposal hoses

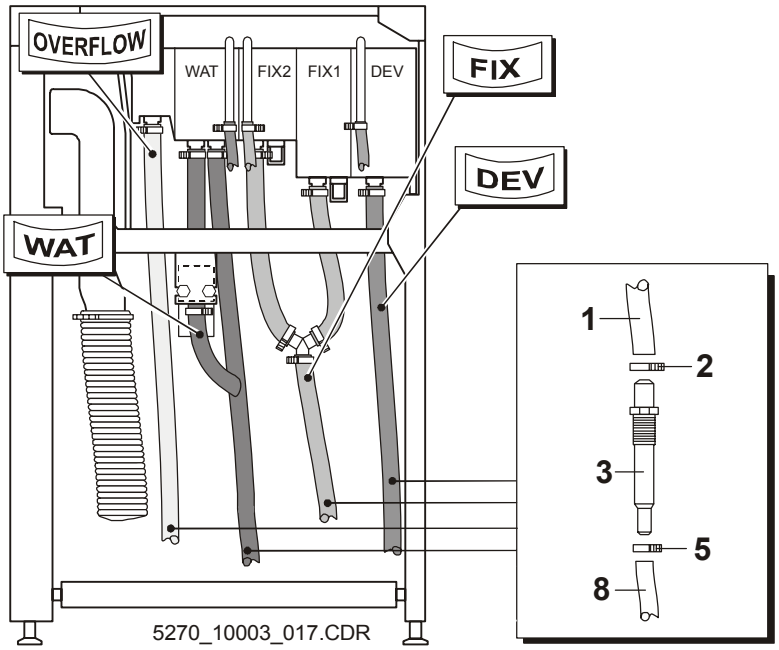

Figure 29

Pos	Designation	Configuration
1	PVC hose Ø 19x2.5 mm (0.75x0.10 inch) transparent	Pre-installed in the machine
2	Hose clamp	
3	Hose connection stub Ø 20 mm (0.79 inch)	
5	Hose clamp	Not included in the shipment, CM+9037200400
8	PVC hose, Developer (red, fiber-reinforced): Ø 19x4 mm (0.75x0.16 inch) Fixer (blue, fiber-reinforced): Ø 19x4 mm (0.75x0.16 inch) Water (transparent, fiber-reinforced): Ø 19x4 mm (0.75x0.16 inch)	Not included in shipment, can be ordered CM+0000064133 CM+0000064134 CM+0000007620

- Shorten the internal disposal hoses if necessary and insert the hose connection stub (3) again.
- Connect the fiber-reinforced (external) PVC hoses with the hose connection stub (3) of the internal disposal hoses.
- Position the developer / fixer disposal hoses together through the opening in the bottom to the central disposal site.
- Combine the hoses of the safety overflow (OVERFLOW) and water (WAT) with a Y piece and connect them with one drain hose, if this is permitted by the local regulations. Install the drain hose to the floor drain.

7 Connecting the Level Sensors

7.1 Replenisher tanks

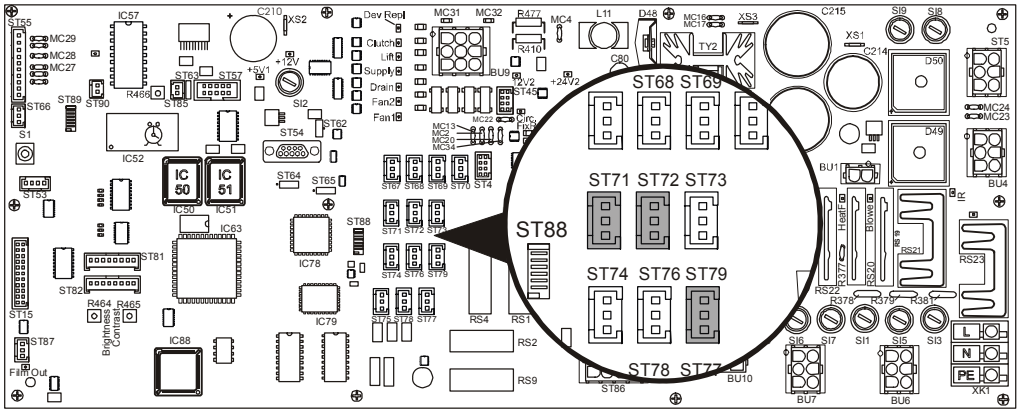

CM+952709450_ (F8.5270.7890._) 5273_10003_009.cdr

Figure 30

7.1.1 Connect the level sensors of the replenisher tanks

- Connect the level sensors of the replenisher tanks on the Control Board PCB1 as follows:

Developer supply	ST 71
Fixer supply	ST 72
Anti-algae level	ST 79

7.1.2 Set the code for the replenisher tank level connection

- Call up the SERVICE program.
- In the dialog window **<Dev/Fix Repl Tnk conn.?>** or **<Algicide Tank conn.?>** enter → **<YES>**.

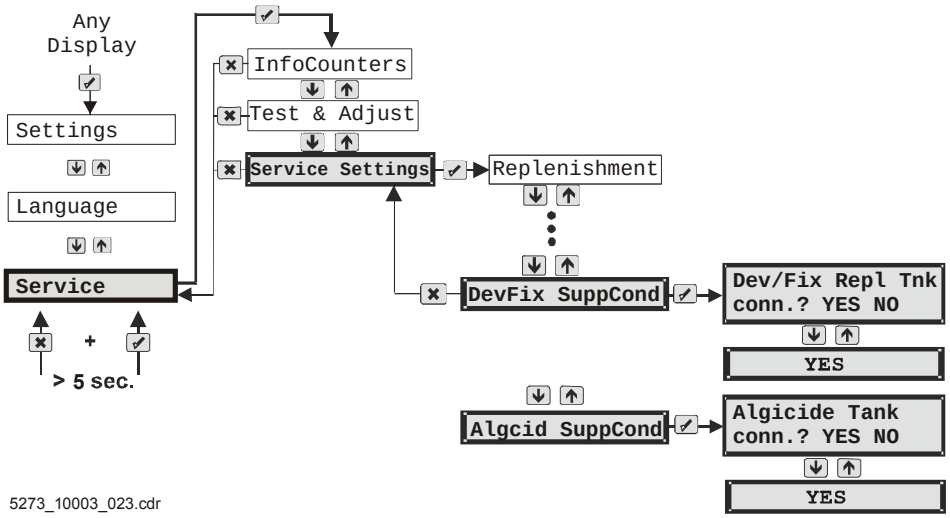

5273_10003_023.cdr

Figure 31

7.2 Mixer

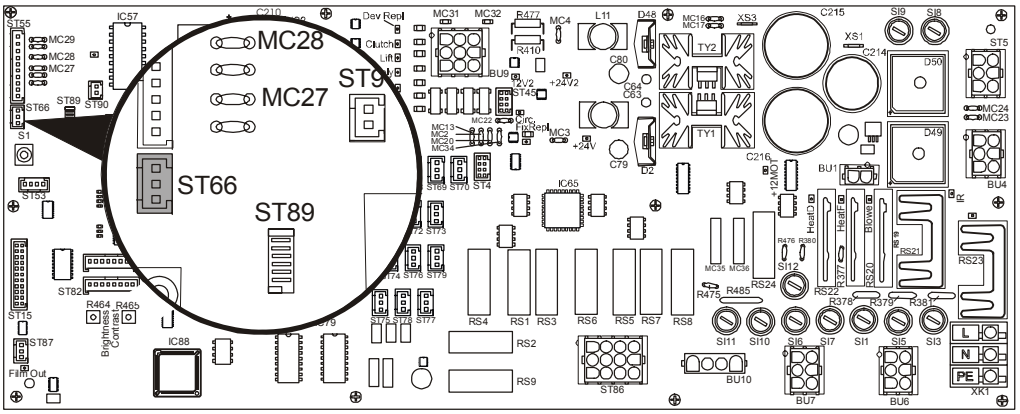

CM+952709450_ (F8.5270.7890._) 5273_10003_010.cdr

Figure 32

7.2.1 Connecting the Mixer communication cable

- Plug the communication cable of the Chemix Mixer (20 m / 787.4 inch long), CM+9528030301, into the Control Board PCB1 / ST66.

7.2.2 Set the code of the mixer communication

- Call up the SERVICE program.
- In the dialog window **<Mixer conn.?>** enter → **<YES>**.

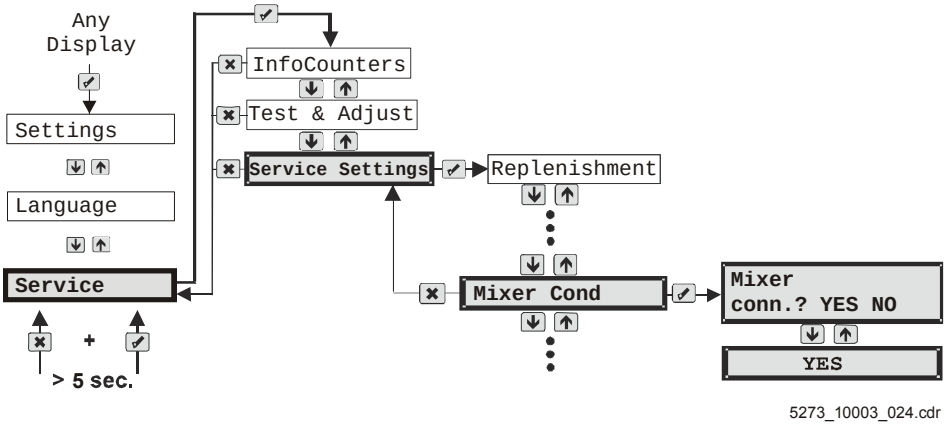

5273_10003_024.cdr

Figure 33

7.3 Disposal tanks

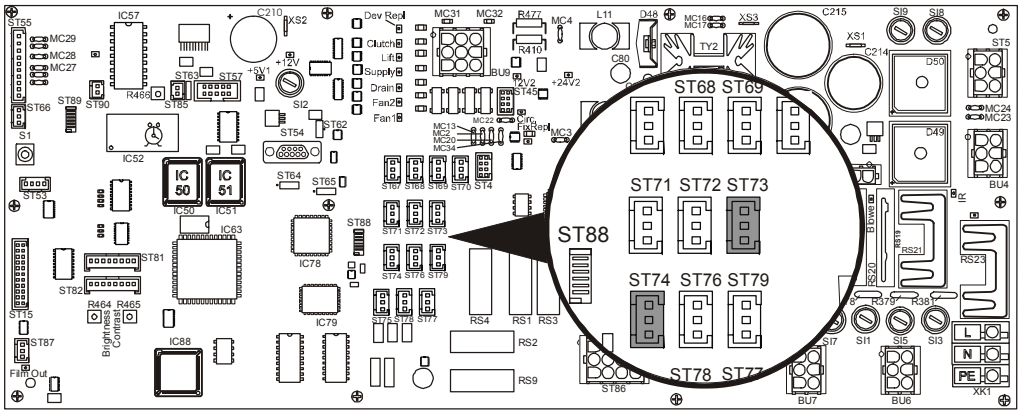

CM+952709450_ (F8.5270.7890._) 5273_10003_011.cdr

Figure 34

7.3.1 Connect the level sensors of the disposal tanks

- Connect the level sensors of the individual disposal tanks on the Control Board PCB1 as follows:

Developer disposal	ST 73
Fixer disposal	ST 74

7.3.2 Set the code for the disposal tank level sensors

- Call up the SERVICE program.
- In dialog window **<Devel Waste cond.>** or **<Fixer Waste cond.>** enter → **<YES>**.

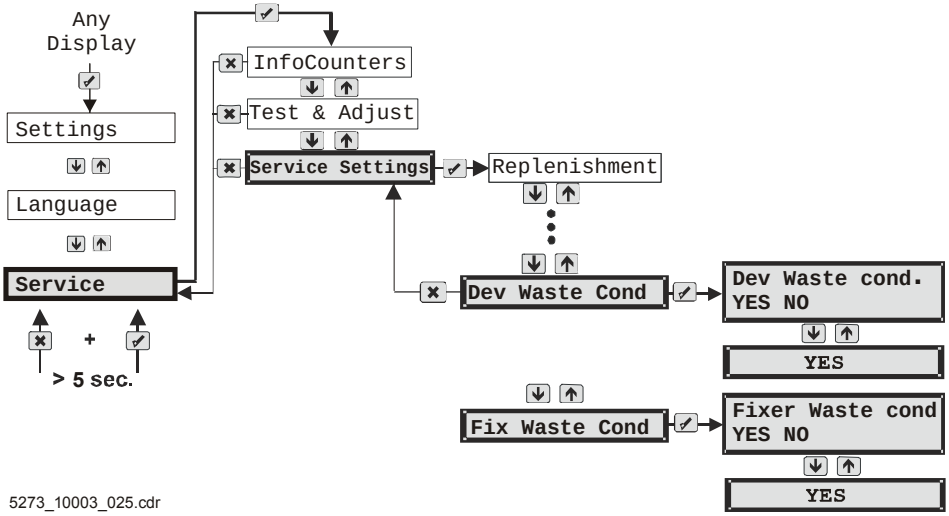

Figure 35

8 Adjusting Volume, Brightness, and Contrast on the Control Board PCB1

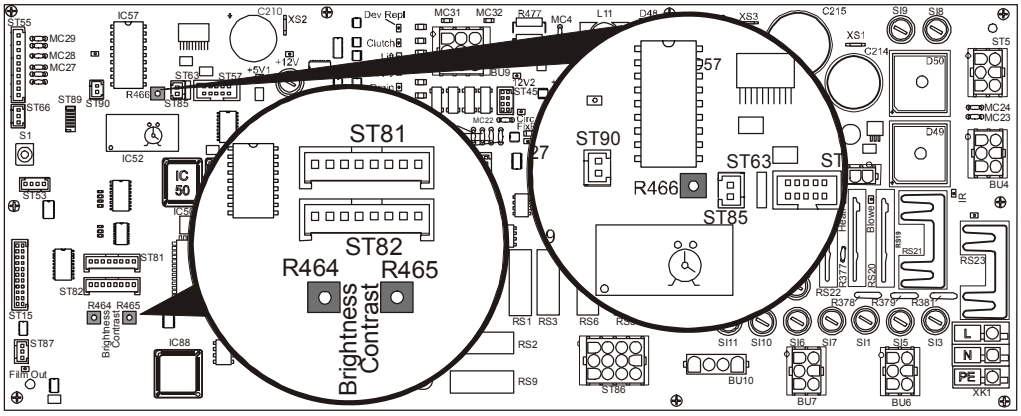

CM+952709450_ (F8.5270.7890._) 5273_10003_029.cdr

Figure 36

- Adjust the volume of the buzzer, and brightness and contrast of the display on the control panel with the potentiometers on the Control Board PCB1:

Buzzer volume	R466
Display brightness	R464
Display contrast	R465

9 Starting Operation

9.1 Preparing the startup procedure

- Verify that the power plug is not plugged in.
- Rinse all machine tanks.
- Rinse the racks well.

9.2 Adapting the mains supply

Ex factory the machine is configured for 230 V.

Prior to the connection of the mains supply the voltage setting must be checked and adapted to the local conditions!

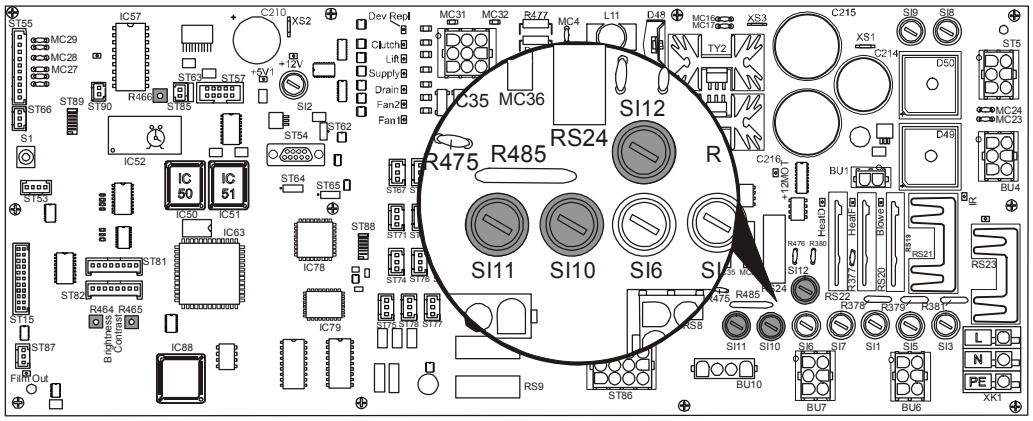

CM+952709450_ (F8.5270.7890._) 5273_10003_015.cdr

Figure 37

- The voltage adaptation is made on the Control Board PCB1.
  The 10A fuse, which is the standard fuse for SI10 is inserted according to the following allocation:

Fuse		**Adaptation to mains voltage**
10 A in SI12	→ = →	200 V
10 A in SI11	→ = →	208 V
10 A in SI10	→ = →	230 V = delivery status

After adaptation of the mains voltage a TEACH IN must be executed (service program `<Test & Adjust>` → `<Teach In>`)

9.3 Checking the function of the GFI switch 0FI

A GFI switch: (I_N = 30 mA in compliance with VDE 664) is integrated in the machine.

Check the function of the ground fault interrupter (GFI switch).

① Press the button, this releases / deactivates the GFI switch!

② Activate the GFI switch by resetting the toggle switch.
(No automatic reset)

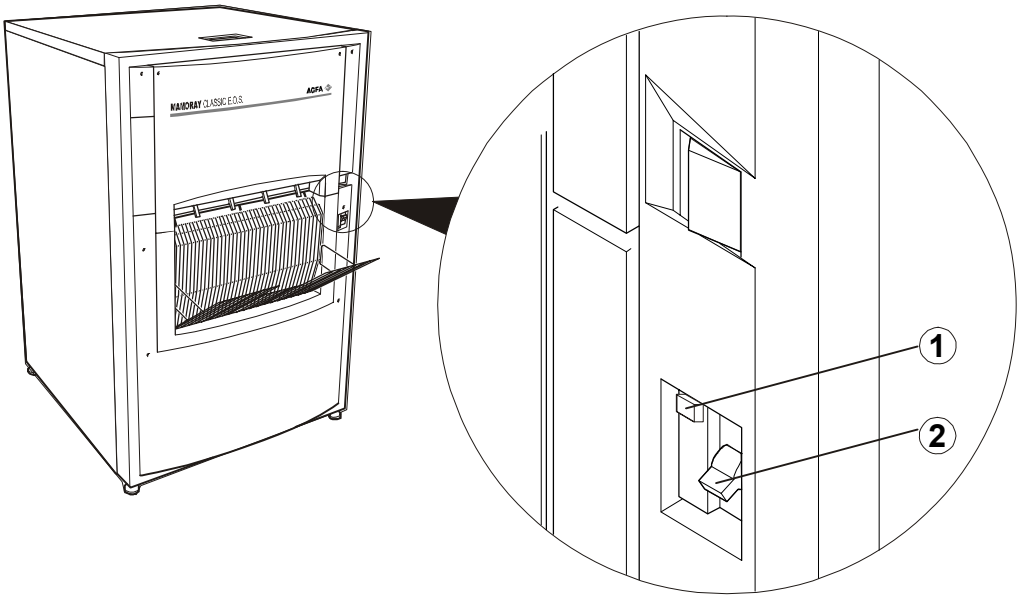

5272_10003_07.cdr

Figure 38

Inform the customer that this procedure must be carried out once per month.

The machine must not be put in operation without an installed GFI switch!

9.4 Filling the developer and fixer tanks

- Close the shut-off valves in the developer / fixer / water tanks.

The O-rings at the shut-off valve are not lubricated with chemical-resistant grease.
Mix the chemicals for the developer and fixer according to the prescription in a separate container or in the mixer!

Tank	Developer tank	Fixer tank 1	Fixer tank 2	Water
Qantity	8.8 l (197.59 fl.oz)	10 l (338.18 fl.oz)	5.8 l (196.15 fl. oz)	5.8 l (196.15 fl. oz)

9.4.1 Manual filling (in Type 5270/100 and Type 5270/105)

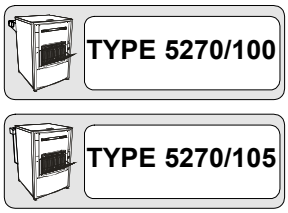

- Fill the fixer tank first, then fill the developer tank.
- Fill the tanks up to the level marking.

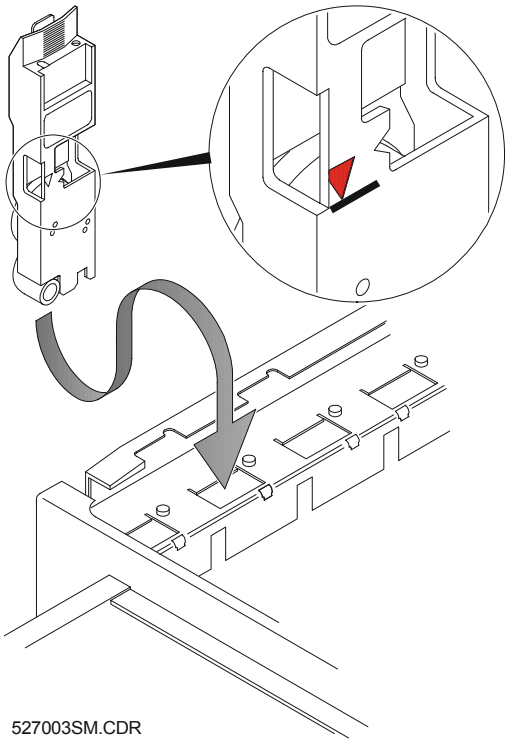

Figure 39

9.4.2 Automatic filling with the AUTOFILL function (only in Type 5270/105)

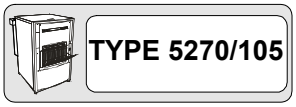

Automatic filling by means of the AUTOFILL function is only possible after a calibration was made.

The machine can fill its tanks automatically. Prior to activation of the operating mode “AUTOFILL” ensure that enough chemical solution is provided in the replenisher tanks or in the Mixer. The menu option “AUTOFILL” is only offered if the capacity of the two replenisher pumps is more than 1 l/min.

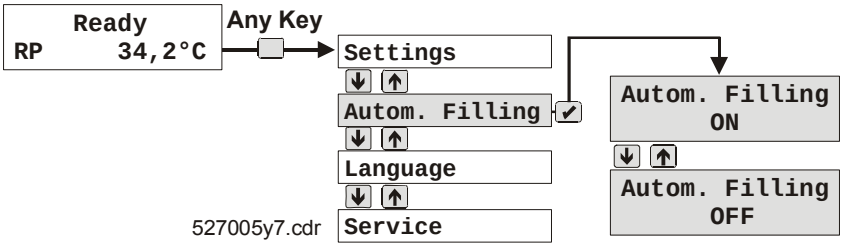

Figure 40

9.5 Switching on the machine

① Connect the power plug.

② Switch on the mains switch.

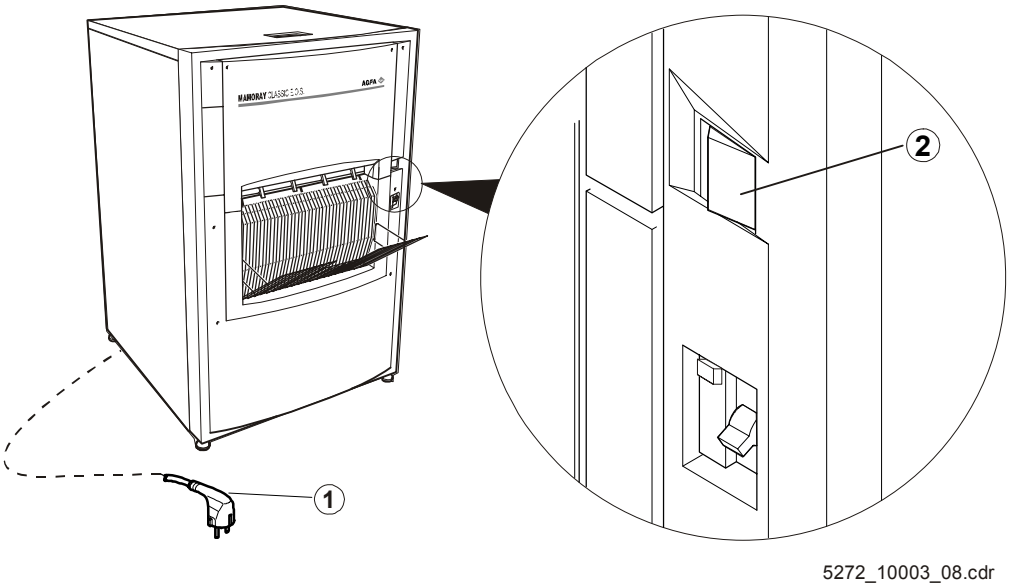

Figure 41

9.6 Calibrating the replenishment rate of developer and fixer upon first startup

The machine can only operate if the calibration of the developer and fixer replenishment rates has been made.

The replenishment pumps for developer and fixer have fixed rates and cannot be adjusted.

For standard replenishment rates see Chapter 3, Section 9.9.13.

A calibration of the replenishment rate is made by changing the pump time. Based on the replenishment rate set up in the SERVICE program **<Settings>** and the memorized pump capacity, the machine calculates the running time of the replenishment pumps.

Preparations:

- Pull out the replenisher supply elbow of the developer or fixer.
- Hold the elbow in a measuring glass (minimum capacity: 1000 ml (33.82 fl.oz).

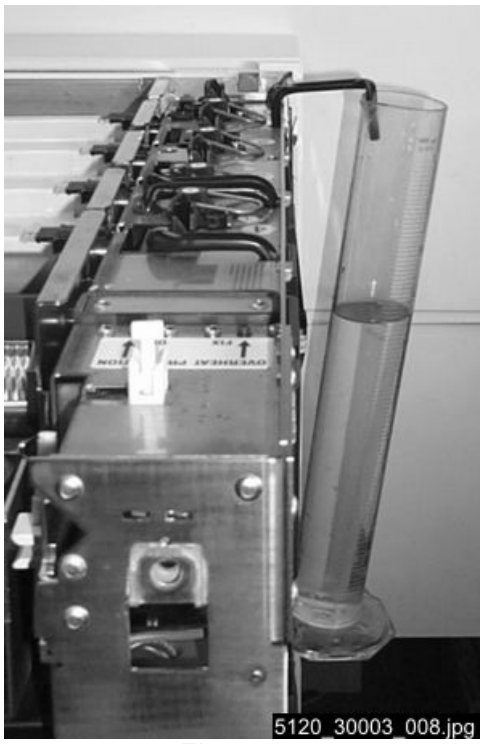

Figure 42

- Switch on the machine.
  The display in the SERVICE program shows the following status message:

Cal Dev and Fix
go to Test / Adjust

Execution of the calibration in the SERVICE program:

- In order to calibrate the **developer replenishment rate** proceed according to the illustrations:

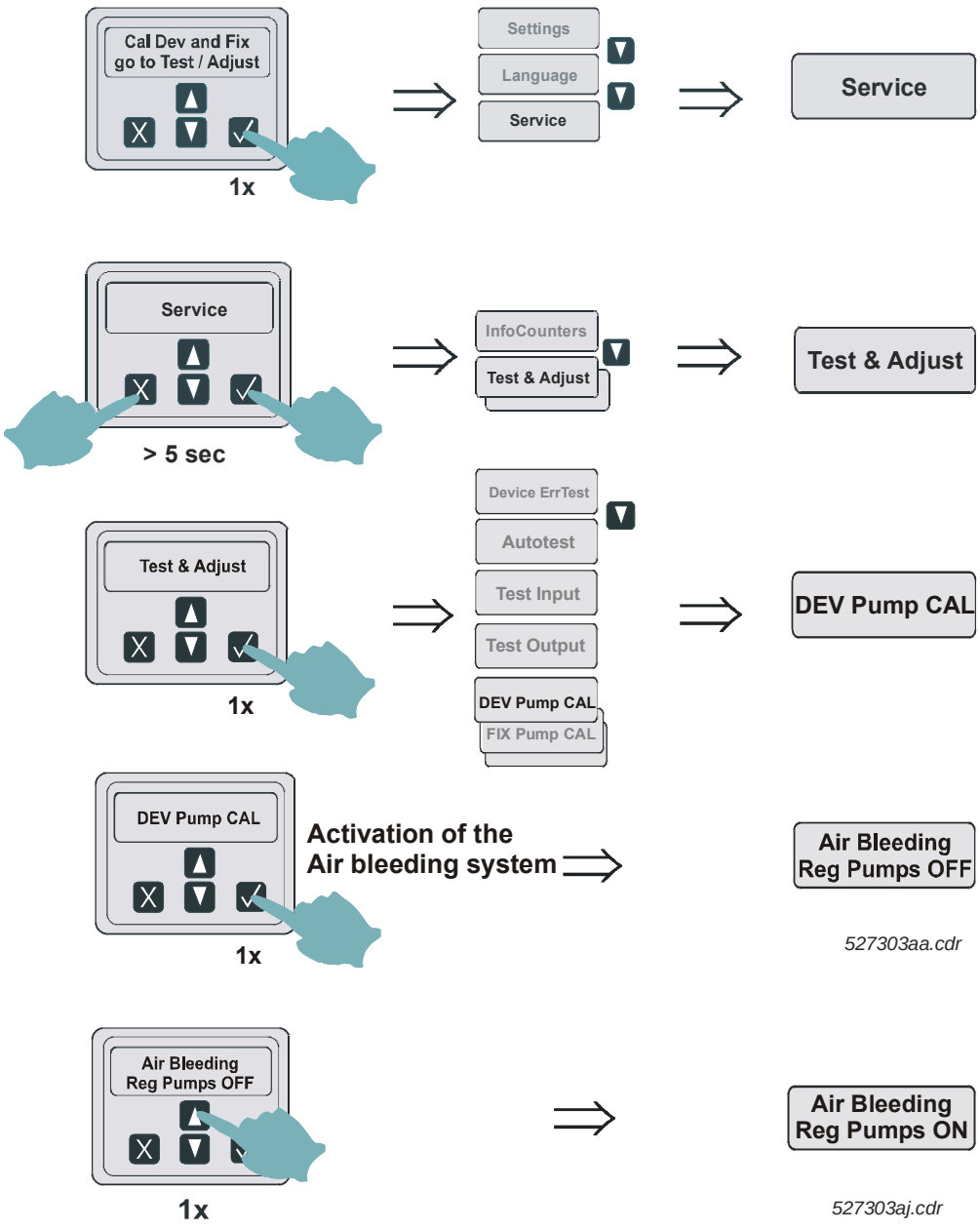

"Air Bleeding" must be repeated until the pump and the hose system have been bled, and the chemical solutions are supplied without any air bubbles. The removed chemicals can be poured back into the respective machine tanks.

- As soon as the supplied chemicals do not show any bubbles terminate the "Air Bleeding" procedure by pressing the ▼ key.

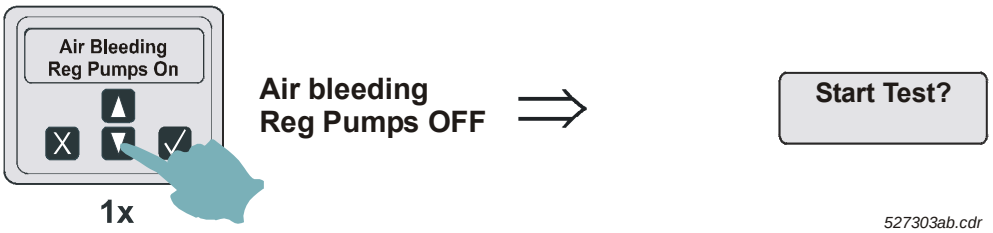

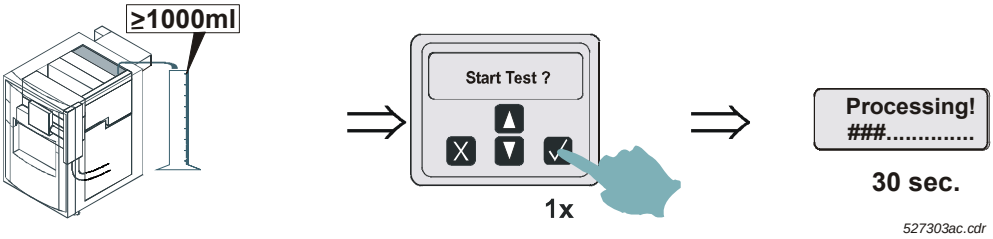

- After the procedure has been completed, read the supplied amount of DEV at the measuring glass.

Enter the measured value via the ▲▼ keys on the display and confirm with the Enter key ✓.

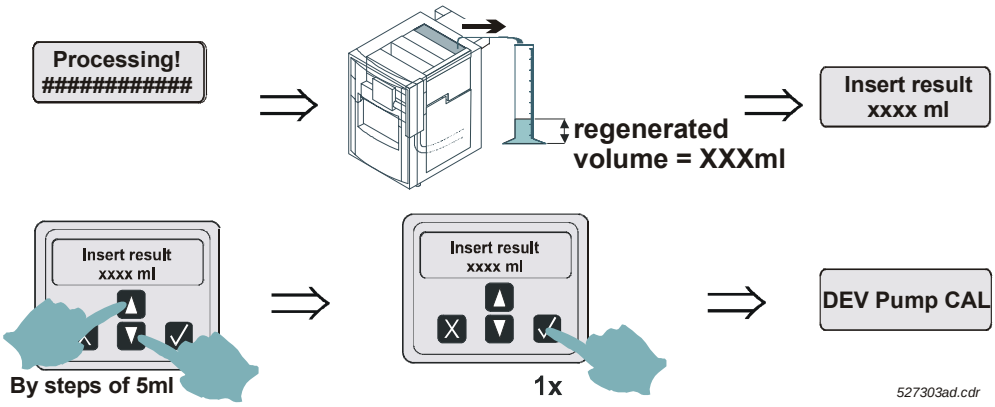

- Select **Fix Pump Calibration** and confirm this selection with the ✓ key.

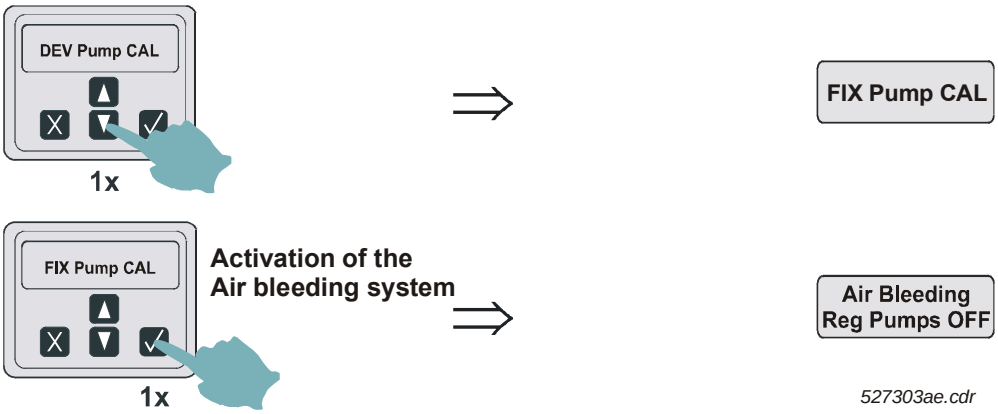

- As soon as the supplied chemicals do not show any bubbles terminate the "Air Bleeding" procedure by pressing the ▼ key.

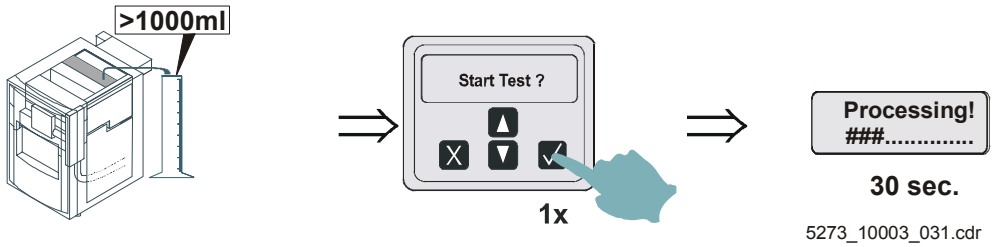

- After the procedure has been completed, read the supplied amount of FIX at the measuring glass.
- Enter the measured value via the ▲▼ keys on the display and confirm with the Enter key ☑.

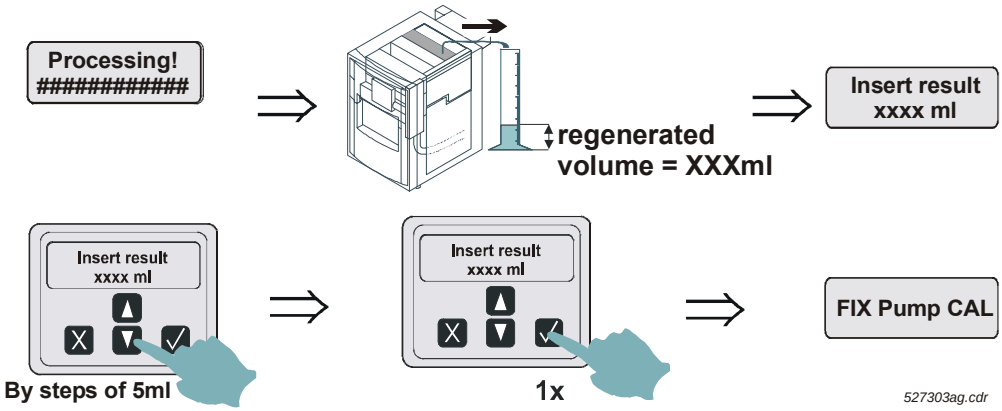

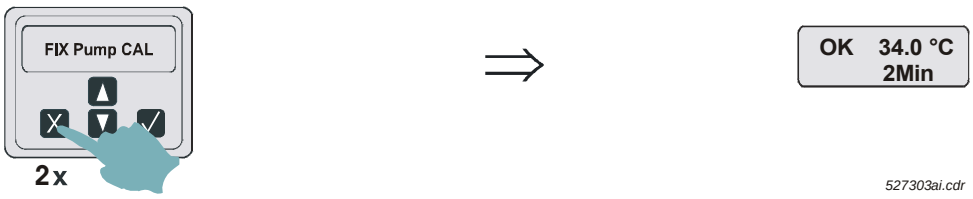

9.7 Reset after switching on the machine

- The machine executes a RESET (no BASEINIT) after switching on.
- All data in the EEPROM (also customer specific data) is kept.
- The machine checks tank contents developer / fixer / water and refills if necessary.
- If the developer, fixer, and water have the required level, all circulation pumps are triggered, the drive motor runs in standby speed (50 cm/min / 19.7 inch/min) during warm-up. This also applies if the setting in the program **<Service Settings>** → is set on **<Drive On Mode FILM>**.
- After the process cycle end (all IR heaters switch OFF) the machine goes back to the warm-up phase.

The applications CURIX, MAMMO, Fuji-Standalone, Fuji I/F DOCKING and LR3300 can be changed via the SERVICE program.
The selection of an application must be confirmed with YES. It is saved upon exit from the SERVICE program.

Type	Application	Process HT/60 s	Process IP/90 s	Process RP/2 min	Process Ext./3 min
5270/100	Curix	YES	YES	YES	NO
5270/105	LR3300	YES	YES	YES	NO

After modification of the application a machine reset with BASEINIT is executed. The machine loads the new parameters.

9.8 BASEINIT

9.8.1 Only execute a BASEINIT in case of:

- Software change
- Inexplicable functional problems

With a BASEINIT all standard process data is loaded from the EPROM (IC 50/51) into the EEPROM. All customer-specific settings in the EEPROM are overwritten and must be entered again via the SERVICE program **<Service Settings>**.

9.8.2 Initiate a BASEINIT:

SERVICE program
A BASEINIT is carried out via the SERVICE program **<Service Settings>** → **<Base Init>**.

Manual routine
The machine is switched off. Press the ▼ key and hold it, switch on the machine, wait until the status indication comes up on the display. Depending on the set process and the current developer temperature the following status is displayed:

```
RP     24.9°C
```

BASEINIT has been completed.

Automatic routine
The machine initiates an automatic BASEINIT if a different software version number than the one stored in the EEPROM is detected in the EPROM (IC50/51) during the initialization.

On principle all customer-specific settings are reset to DEFAULT during a BASEINIT.

Exception:
The following settings are only overwritten if a plausibility check detects incorrect limit values.

Settings	Incorrect limit values during plausibility check
Replenisher pump capacity	< 150ml/min or > 1.5l/min (< 5.07fl.oz/min or >50.73fl.oz./min)
Display language	not defined
Process application	other than CURIX, MAMMO, FUJI Standalone, FUJI IF Docking, LR3300
Calibration of the developer temperature	> +/- 1°C

The contents of the temporary infocounter is deleted. If the system detects an invalid process application, temporary and non-temporary infocounters are deleted.

DEFAULT settings after a BASEINIT
see Chapter 3, Section 9.9.11

9.9 System settings

9.9.1 Setting the software switches in the SERVICE program

The software switches allow changing and/or activating of special non-standard functions and of standard parameters.
These settings may be entered in the SERVICE program **<Service Settings>**.

9.9.2 Setting the process parameters on the control panel

Depending on the customers' wishes the parameter can be changed.

- Back key
  Press this key to exit an input window, dialog box, or a menu. If you press this key in an input window any modifications made in this window will be canceled and reset to the initial values.
- Selection keys
  Use these keys to scroll through the options in the menus or to change values in input windows.
- Enter / Confirmation key
  Use this key to show the options in a menu or to confirm a dialog. A confirmed dialog opens the corresponding input window. Entered data is confirmed and accepted.

Translation of display texts (12 available languages) see Chapter 6.7.

Diagram:
Setting the process parameters on the control panel

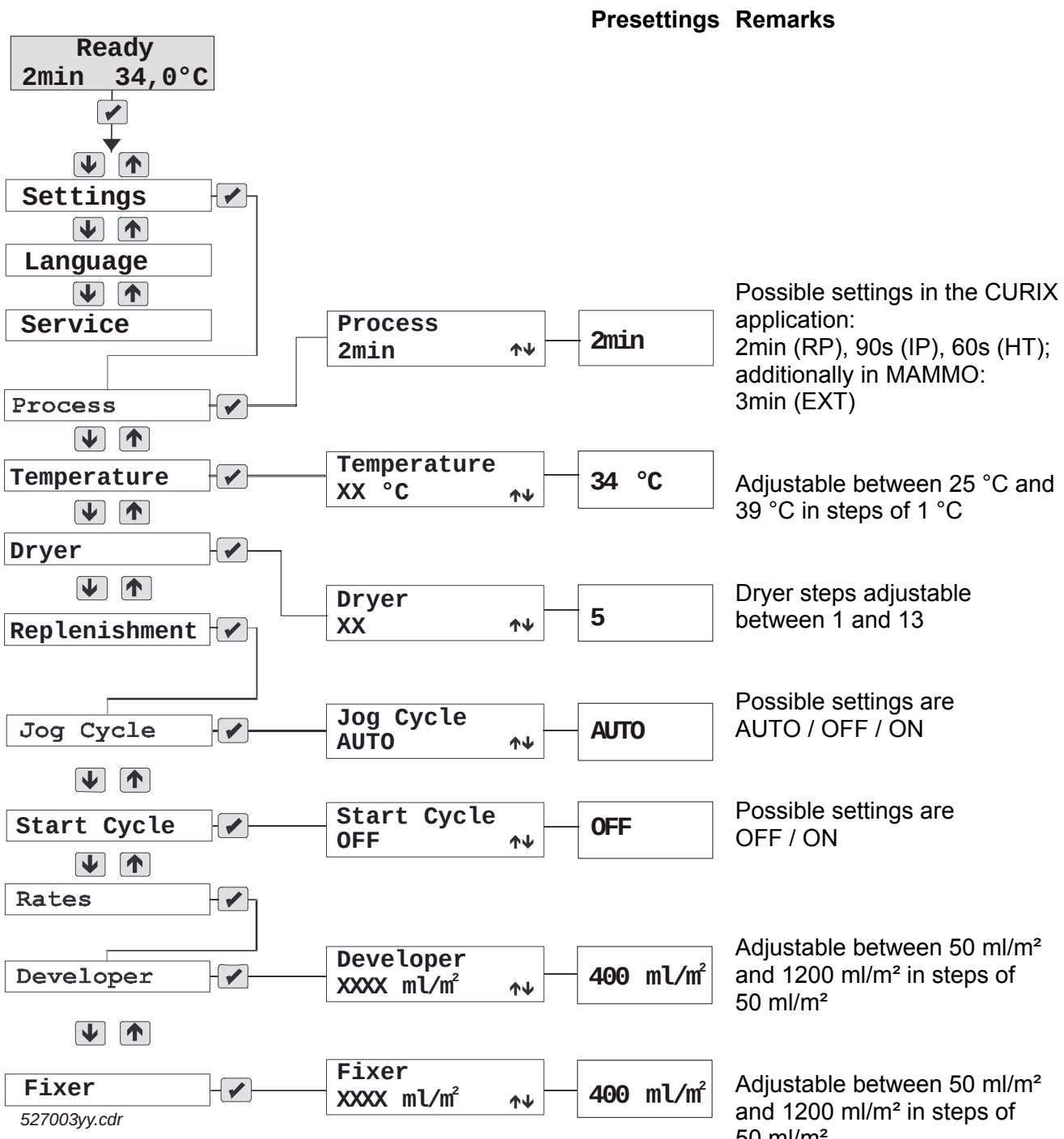

Figure 43

9.9.3 Access to the SERVICE program

Access the SERVICE program by pressing the keys ✕ and ✓ simultaneously with the thumb and holding them (5sec).

9.9.4 Setting date and time

- Call up the menu option <Set Date/Time>:

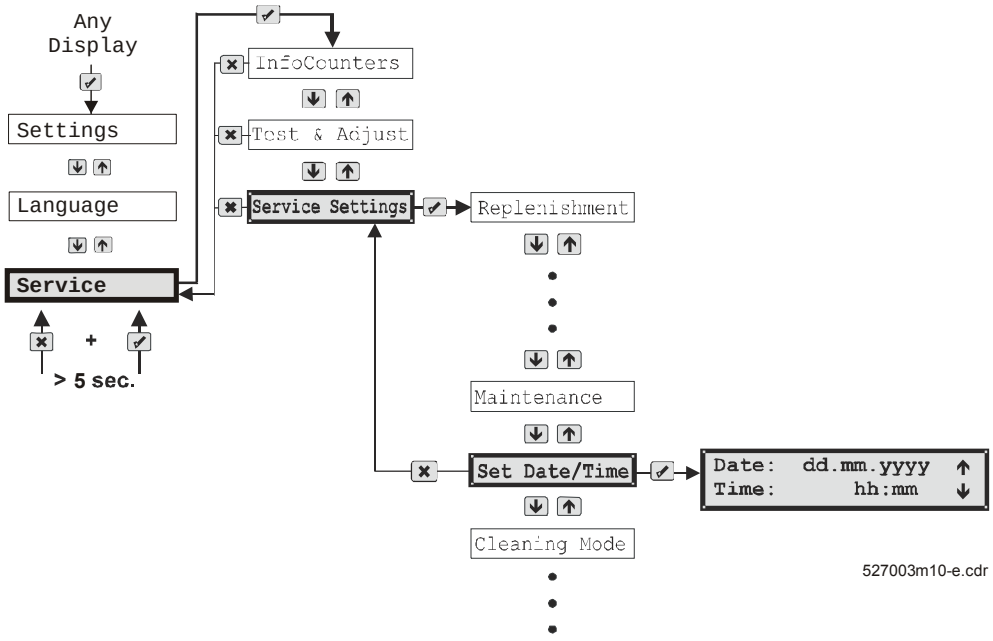

Figure 44

- Set date and time:

Action	Keys	Result
Select <Set Date/Time>	✓	Date: dd.mm.yyyy Time: hh:mm
Set the date	↓ ↑	Date: dd.mm.yyyy
Confirm the set date	✓	
Set the time	↓ ↑	Time: hh:mm
Confirm the set time	✓	

✕ - Press this key to cancel a setting.

Date:		Time:	
dd	= day	hh	= hours
mm	= month	mm	= minutes
yyyy	= year		

9.9.5 Setting the service intervals in the SERVICE program

To ensure that the machine starts a new service interval after the installation, the service indicator must be reset.

- Call up the menu option **<Maintenance>**:

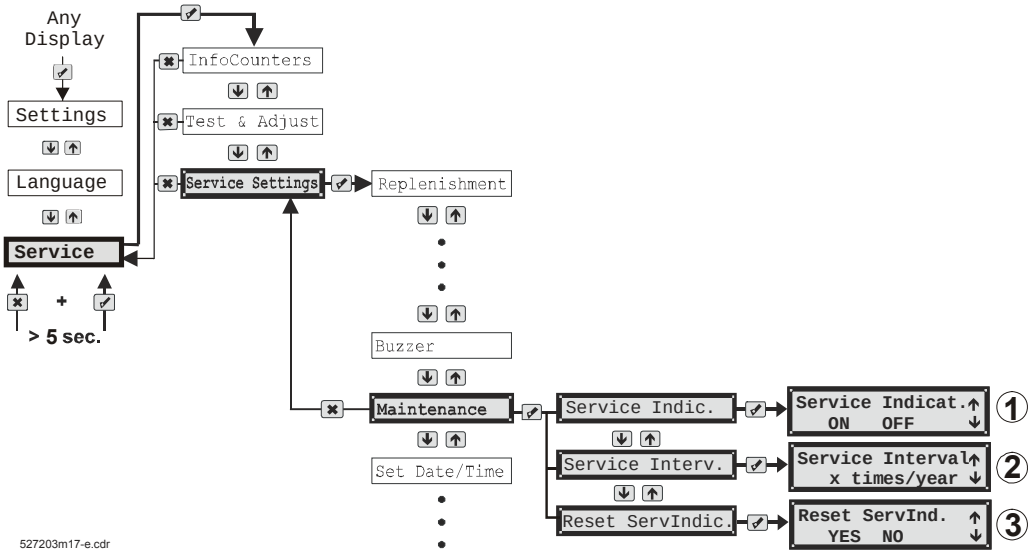

Figure 45

- Reset the service indicator:

	Action	Keys	Result
(1)	Select **<Service Indic.>**	✔	**Service Indic** **ON OFF**
	Activate the service indicator; set ON	↓ ↑	**Service Indicat.** **ON**
	Confirm the input	✔	

The service indicator (1) must be activated, only then the SERVICE interval (2) can be selected and the service indicator (3) can be reset.

(2)	Select **<Service Interval>**	✔	**Service Interval** **x times/year**
	Select 2, 3, or 4 times/year	↓ ↑	**2 times/year** (for example)
	Confirm the input	✔	
(3)	Select **<Reset ServIndic>**	✔	**Reset ServIndic** **YES NO**
	The service indicator is reset as the new date is saved	↓ ↑	**Reset ServIndic.** **YES**
	Confirm the input	✔	

9.9.6 Executing a <Teach In> in the SERVICE program

As the current values depend on the actually applied supply voltages, they must be read in via the **<Teach In>**.

The <**Teach In**>.procedure must be completed to be able to exit this dialog.

- Call up the menu option **<Teach In>**:

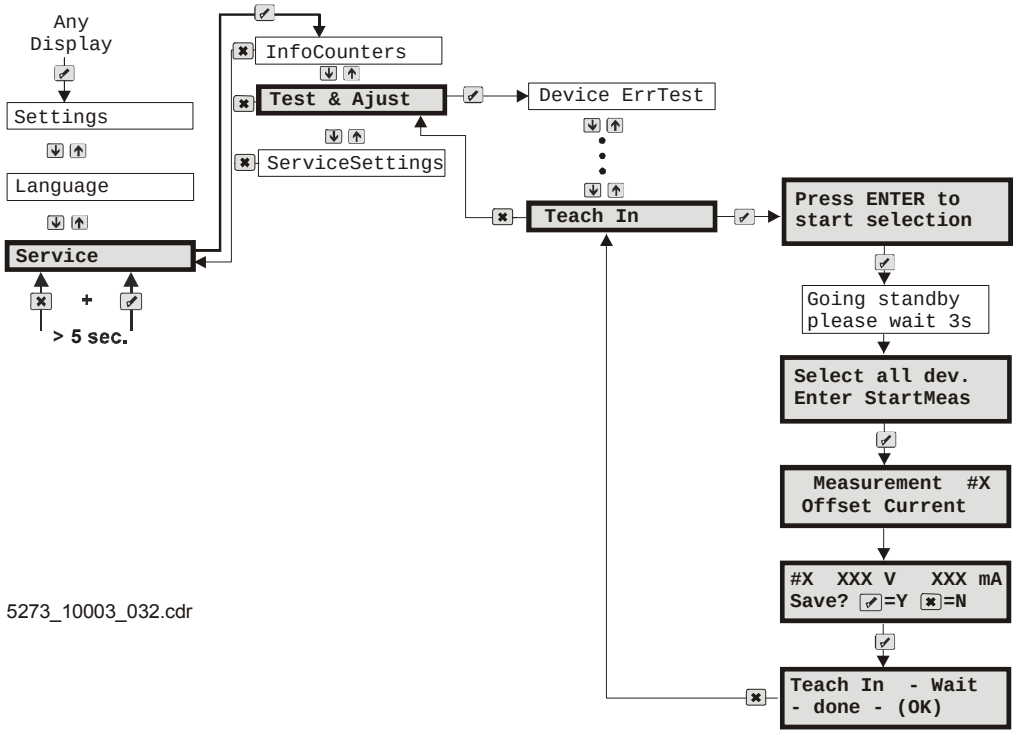

Figure 46

#x	= number of the consumer
XXX V	= voltage
XXX mA	= measured current
✔ **=Y**	= yes
✖ **=N**	= no (new value not yet saved, old value is kept)

<Teach In> procedure:

Action	Keys	Display text
Select the dialog window **<Teach In>**	✔	**Press ENTER to start selection**
	✔	**Going standby please wait 3s**
All consumers are switched off.		**Select all dev. Enter StartMeas**
The supply voltages of the machine and the currents of the consumers are measured.	✔	**Measurement #X Offset Current**
The first measurement is carried out and then the result is displayed.		**#X: XXX V XXX mA Save ? √=Y x=N**
Save the measurement.	✔	**#X: XXX V XXX mA**
The next measurement is carried out. If there are no errors, current and voltage are stored in the EEPROM after ENTER.		
Once all consumers have been measured and the results saved, the following message is displayed:		**Teach in - WAIT -done- (OK)**
Exit the function.	✘	

Error messages

In the following cases a warning is displayed during the **<Teach In>**:

- The measured current value is outside the given range of values:

```
#xx WARN: aaaamA
Range=bbbb-cccc!
```

xx = number of the consumer
aaaa = measured current
bbbb = minimum permissible value
cccc = maximum permissible value

- If the current value cannot be measured within the given maximum measuring time, the measurement will also be aborted with an error message:

```
#xx TO:yyyy-zzzz
ccccms >aa%/bbbb
```

xx = number of the consumer
yyyy = last current value
zzzz = actual current value
cccc = maximum measuring time
aa = max. difference of two current values in percentage
bbbb = difference of two current values, absolute value

For a table of the current values see Chapter 6.2

9.9.7 Calibrating the Developer Temperature (CAL)

The developer temperature sensor can be calibrated with the function **<CAL DEV Sensor>**. The adjustment range is +/- 1 °C in steps of 0.1 °C.

- Check the developer temperature with e thermometer.
- Enter the resulting temperature under SERVICE program **<CAL DEV Sensor>**.

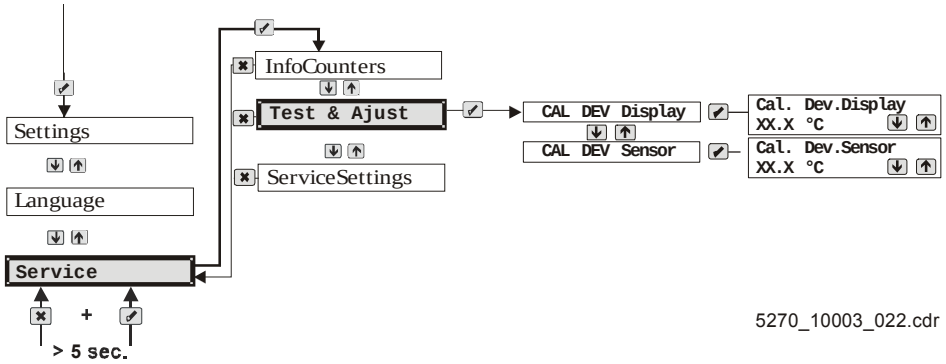

Figure 47

Use the function **<CAL DEV Display>** to adapt the temperature indication on the display. The adjustment range is +/- 1 °C in steps of 0.1 °C.

9.9.8 Resetting the temporary infocounters in the SERVICE program

Delete the contents of the temporary infocounter after an installation or maintenance, as it contains information about film, developer and fixer consumption between the service intervals.

The following temporary data is no longer available after deletion of the infocounter:

- Consumption of developer solution
- Consumption of fixer solution
- Processed film in square meters

- Call up the dialog window:

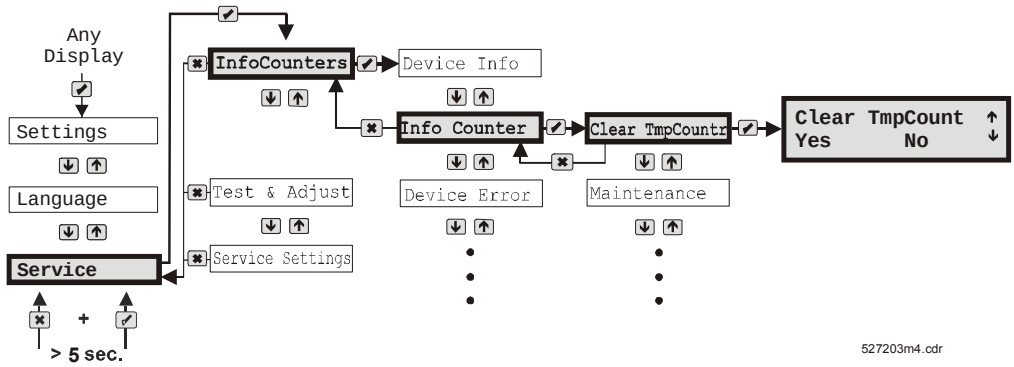

Figure 48

- Delete the infocounter:

Action	Keys	Result
Call up the **<InfoCounters>** menu and confirm	✔	**Info Counter**
Select the dialog window **<Clear TEMPCountr>**	↓ ↑	**Clear TmpCountr**
Confirm the input	✔	**Clear Tmp Count Yes No**
Select **<Yes>**	↓ ↑	**Clear Tmp Count Yes**
Confirm the selection	✔	Data deleted

tmp = temporary data

9.9.9 Display all <Service Settings> in the SERVICE program with <Quick Display>

The dialog window **<Quick Display>** under SERVICE program **<Service Settings>** → **<Quickdisplay>** offers an overview over the setup in the service settings.

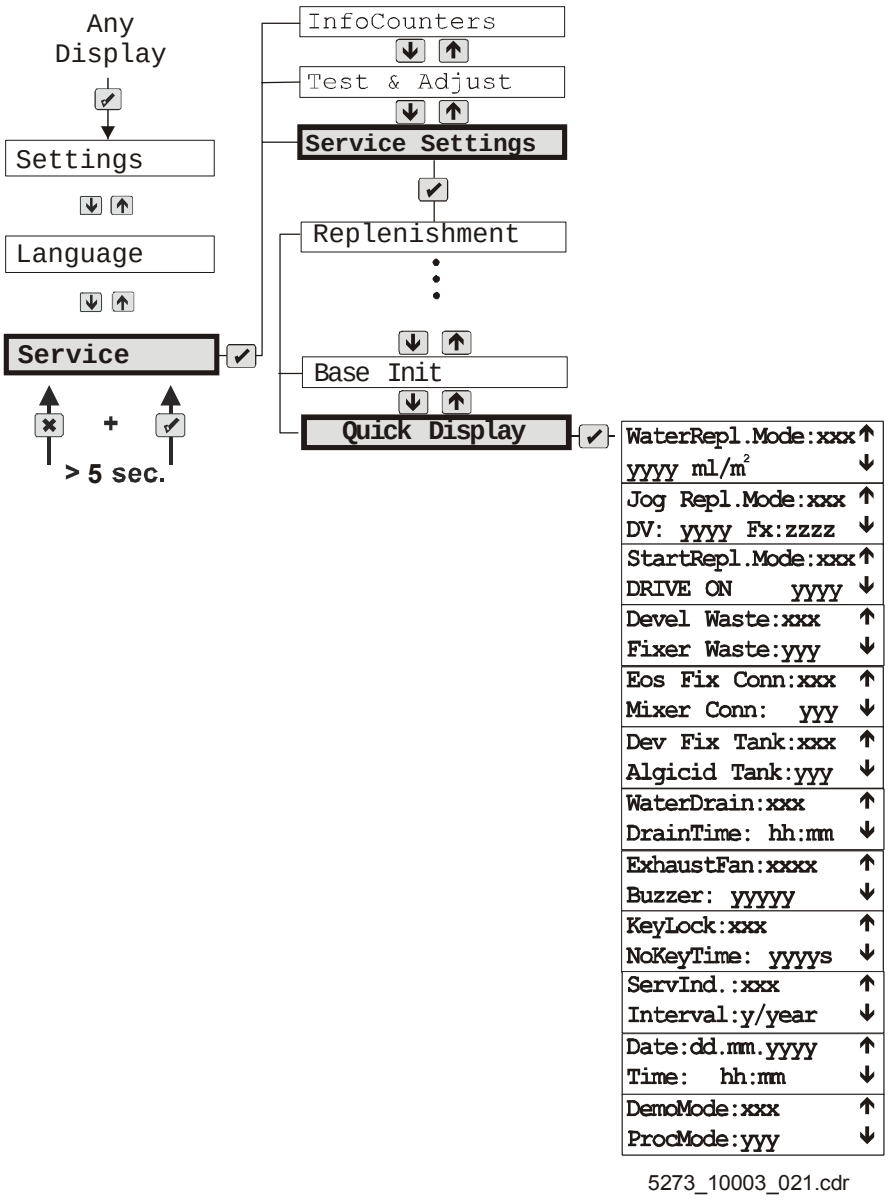

Figure 49

9.9.10 Setting the customer specific settings in the SERVICE program <Service Settings>

During first installation further settings can be set in the SERVICE program **<Service Settings>**.

- Call up the dialog window:

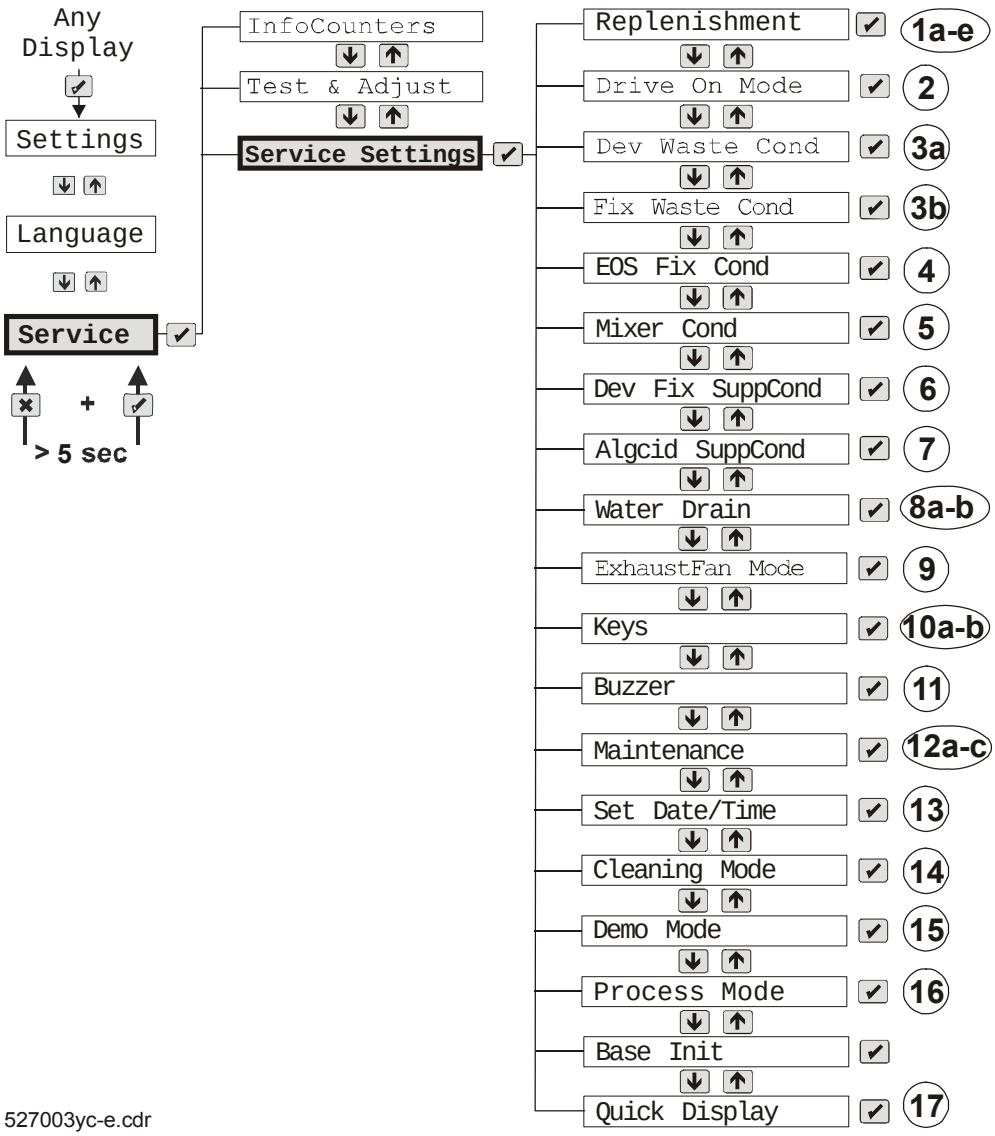

Figure 50

	SERVICE SETTINGS	DEFAULT settings	Possible settings	Meaning
1a	Start replenishment (Menu Service settings→ Replenishment→ Start Replen.)	**Start repl. NO**	**Start repl. NO** ↓ ↑ **Start repl. YES**	Deactivate the start replenishment of developer and fixer with 400 ml each. Activate.
1b	Water replenishment (Menu Service settings → Replenishment → Wat. Repl. Mode)	**Surface Replen. CONT**	**Surface Replen. CONT** ↓ ↑	**Process time dependent water supply:** The water supply starts with the film order and end after the process time has elapsed.
			Surface Replen. SURF ↓ ↑	**Surface dependent water supply:** When film feed is detected a process dependent delay time counts down before the water replenishment starts (film just before the water tank). The replenishment rate depends on the set value of the water replenishment (see 1c).
			Surface Replen. ALGAE	**Prevention of algae:** mode CONT. + 5min. In addition, water is supplied every 30 min and always for 5 min if no film is developed.

	SERVICE SETTINGS	DEFAULT settings	Possible settings	Meaning
1c	Setting of the water replenishment rate ml/m² (Menu Service settings→ Replenishment →Water Repl. Value)	`Wat.Repl.Value 30000 ml/m²`	`Wat.Repl. Value 30000 ml/m²` Between 3000 and 30000 ml/m² adjustable in steps of 1000 ml/m²	Value for the water replenishment rate if the setting **<Surface Replen SURF>** was selected for the water replen. mode.
1d	Jog-cycle replenishment developer - fixer (Menu Service settings→ Replenishment→ Jog Repl. Mode)	`Jog Replenishm Auto`	`Jog Replenishm. Auto`	When the machine is switched on the film to be processed is calculated based on the values of the last work day. If this value is below 3 m² the jog-cycle is activated automatically, otherwise deactivated.
			`Jog Replenishm. ON`	The amount set in the SERVICE program (see 1e) is replenished every hour.
			`Jog Replenishm. OFF`	Jog replenishment is switched off.
1e	Developer jog-cycle rate (Menu Service settings→ Replenishment→ Jogdev. Replval.	`Jog Dev. Repl. 100ml/h`	`Jog Dev. Repl. Xxx ml/h` Adjustable between 50 and 200ml/h in steps of 50ml/h	If **<Jog Replenishm.ON>** has been set, the amount to be replenished for developer and fixer can be entered.
	Fixer (Menu Service settings→ Replenishment→ JogFix Replval.)	`Jog Fix. Repl. 100ml/h`	`Jog Fix. Repl. Xxx ml/h`	

	SERVICE SETTINGS	DEFAULT settings	Possible settings	Meaning
2	Motor drive during processor STANDBY (Menu Service settings→ Drive on Mode)	Drive ON Mode CONTINUOUS	Drive ON Mode CONTINUOUS ↓ ↑ Drive ON Mode FILM	Activate / deactivate the main drive during processor STANDBY The drive motor runs with 0.5 m/min during processor STANDBY Drive motor only runs during film process time, then STOP
3a	Level sensor of developer disposal tank connected? (Menu Service Settings→ Dev Waste Cond)	Devel.Waste cond Yes	Devel.Waste cond Yes ↓ ↑ Devel.Waste cond No	Check if the developer disposal tank is connected.
3b	Level sensor of fixer disposal tank connected? (Menu Service Settings→ Fix Waste Cond)	Fixer Waste conn? Yes	Fixer Waste conn? Yes ↓ ↑ Fixer Waste conn? No	Check if the fixer disposal tank is connected.
4	E.O.S. fix device connected? (Menu Service Settings→ EOS Fix Cond)	EOS Wash/Fix conn.? No	EOS Fix conn.? No ↓ ↑ EOS Fix conn.? Yes	Check if an E.O.S. fix device is connected.

	SERVICE SETTINGS	DEFAULT settings	Possible settings	Meaning
5	Level signal mixer connected? (Menu Service Settings→ Mixer Cond)	**Mixer conn.? No**	**Mixer conn.? No** ↓↑ **Mixer conn.? Yes**	Check if the level signal generator mixer is connected.
6	Level sensor supply tanks (Menu Service Settings→ DevFix SuppCond)	**Dev/Fix Repl Tnk conn.? No**	**Dev/Fix Repl Tnk conn.? No** ↓↑ **Dev/Fix Repl Tnk conn.? Yes**	Check if the level sensors of the replenisher tanks are connected.
7	Level sensor anti-algae tank (Menu Service Settings→ Algcid SuppCond)	**Algicide Tank conn.? No**	**Algicide Tank conn.? No**	Not active
8a	Automatic water tank drain due to algae (Menu Service Settings→ Water Drain→ Wat.Drain Mode)	**Water Drain On**	**Water Drain On** ↓↑ **Water Drain Off**	Activate / deactivate the automatic water tank draining (and refill) for 24h-systems, to prevent algae growth.
8b	Setup of time for water tank draining (Menu Service Settings→ Water Drain→ Wat. Drain Time)	**Water Drain Time 2:00**	**Water Drain Time 2:00** ↓↑ **Water Drain Time hh:mm**	Setting for water tank draining time. • DEFAULT: 02:00 h • On time can be set.

	SERVICE SETTINGS	DEFAULT settings	Possible settings	Meaning
9	Function of the exhaust fan in processor standby (Menu Service Settings→ ExhaustFan Mode)	ExhaustFan FILM	ExhaustFan FILM ↓ ↑ ExhaustFan CONTINUOUS	FILM: "Half-capacity" in processor standby, full capacity during film cycle. CONTINUOUS: Exhaust fan runs permanently with full capacity.
10a	Control panel lock (Menu Service Settings→ Keys→ Key Lock)	Key Lock NO	Key Lock NO ↓ ↑ Key Lock YES Adjustment range: 1- 13 dryer steps	Restricted operation possibilities of the Settings menu. The customer can only set the dryer steps.
10b	Return to the operation program Timeout (Menu Service Settings→ Keys→ TimeoutNoKey)	Timeout NoKey 300 seconds	Timeout NoKey xxx seconds Adjustable between 0 and 3600 s in steps of 5 s	Set time after which the system returns automatically from the SERVICE program into the operation program. Modified DEFAULT settings are not saved!
11	Buzzer (Menu Service Settings→ Buzzer)	Buzzer ENABLE	Buzzer ENABLE ↓ ↑ Buzzer DISABLE	Activates the buzzer. Deactivates the buzzer. There is no buzzer signal, neither for keystrokes nor for error messages.

	SERVICE SETTINGS	DEFAULT settings	Possible settings	Meaning
12a	Switch on service / maintenance indicator (Menu `Service Settings→ Maintenance→ Service Indic.`)	**ServiceIndicat. ON**	**ServiceIndicat. ON** ⬇⬆ **ServiceIndicat. OFF**	Activates the service interval indication for the customer. Once the SERVICE interval has elapsed, the customer is informed about the need of maintenance during the first 3 films after switching on. Deactivate.
12b	Set the SERVICE intervals per year (Menu `Service Settings→ Maintenance→ Service Interv.`)	**ServiceInterval 2 times/year**	**ServiceInterval 2 times/year** ⬇⬆ **ServiceInterval x times/year** Adjust 2, 3, or 4 times/year	Set the SERVICE interval. The interval is only displayed in case of an activated service/ maintenance system.
12c	RESET (Menu `Service Settings→ Maintenance→ Reset ServIndic.`)	**ResetServIndic No**	**ResetServIndic No** ⬇⬆ **ResetServIndic YES**	The “Service” display is deleted. SERVICE intervals are set on counter level “0”. The current data is saved.

After an installation always execute a RESET. So the interval starts at the time of the installation.

	SERVICE SETTINGS	DEFAULT settings	Possible settings	Meaning

13	Set Date/Time (Menu `Service Settings→ Set Date/Time`)	`-`
		No preset values
			`Date:DD.MM.YYYY`
			`Time: hh:mm`
			Enter DD, confirm and use the ↓↑ keys to move to the next value.
				Set date and time
				DD = day
				MM = month
				YYYY = year
				hh = hour
				mm = minutes

14	Cleaning mode (Menu `Service Settings→ Cleaning Mode`)	`-`
		No preset values
			`Cleaning Mode`
			`###.....`
			After 30 minutes **<cleaning Mode finished>** is displayed. Press ✔ to exit the **<Cleaning Mode>**
				Activates the cleaning mode.
				Drive motor runs, developer and fixer are heated to 39°C, circulation pumps are running. The replenisher pumps are not triggered.

15	Simulation (demo) of film processor (Menu `Service Settings→Demo Mode`)	`Demo Mode`
		`OFF`
			`Demo Mode`
			`OFF`
			↓↑
			`Demo Mode`
			`ON`
				Switch off demo mode.
				Demo mode without function of pumps, dryer, level sensor, heater and cross flow fan. Only the drive system runs.

16	Process mode (Menu `Service Settings→ Process Mode`)	`Curix`	`New Mode:Curix`
			`Yes No`
			The applications CURIX, MAMMO, FUJI-STANDALONE, FUJI- I/F DOCKING and LR3300 can be selected
				Selection of the application
				After modification of the application a machine reset with BASEINIT is executed!

17	Quick Display (Menu `Service Settings→ Quick Display`)	`-` No preset values		Overview over all settings in the Service Settings

9.9.11 DEFAULT settings ex factory / after BASEINIT

DEFAULT Values	
Start replenishment	No
Water replenishment	CONT
Jogcycle replenishment	AUTO
Drive on Mode	CONTINUOUS
Language	ENGLISH
EOS Fix Cond	NO
Mixer Cond	NO
Water drain Mode	ON
Exhaust Fan	FILM
Key Lock	NO
Buzzer	ENABLE
Service indication	ON
Service interval	2
Process	2 min (RP)
DEV temperature	34°C
Dryer step	process dependent
Timeout Nokey	300 sec
DEV replenishment rate	400 ml/m²
FIX replenishment rate	400 ml/m²
WAT replenishment rate	30 l/h
Jogcycle DEV replenishment rate	100 ml/h
Jogcycle FIX replenishment rate	100 ml/h

9.9.12 Processes

Application	HT	IP	RP	EXT
Curix	60s	90s	2min	-
Mammo	60s	90s	2min	3min
FUJI Standalone	60s	90s	2min	-
FUJI I/F Docking	60s	90s	2min	3min
LR3300	60s	90s	2min	-

HT **H**igh **T**hroughput
IP **I**ntermediate **P**rocessing
RP **R**apid **P**rocessing
EXT **Ext**ended

9.9.13 Process data

The film is developed according to the selected process type (HT, IP, RP, EXT*):

Process data/time	HT (60s)	IP (90s)	RP (2min)	EXT (3min)
Process speed	160 cm/min 62.99 in/min	106 cm/min 41.73 in/min	80 cm/min 31.5 in/min	52 cm/min 20.47 in/min
Standard DEV temperature (range: 25-39°C/ 77-102°F)	38°C (100°F)	36°C (96.8°F)	34°C (93°F)	34°C (93°F)
Standard FIX temperature Fixer 2:	34°C (93°F)			
Warm-up time	approx. 20 min			
Dryer setting (range: 1 to 13).	7	5	5	5
Replenishment cycle	0.25 m^2 3.88 in^2			
Water supply	3000 ml/min (101.45 fl.oz/min)			
Water pressure range min. max.	 2 bar 6 bar			
Water conductivity value	min. 3 µS/cm			

9.9.14 Application dependent process parameter

Application (ml/m²)		CURIX	MAMMO	FUJI Stand Alone	FUJI I/F Docking	LR3300
Developer replenishment rate DEFAULT settings		400	400	400	400	600
Range	min	50	50	50	50	50
	max	1200	1200	800	800	800
Fixer replenishment rate DEFAULT settings		400	600	400	400	600
Range	min	50	50	50	50	50
	max	1200	1200	800	800	800

Operating Instructions

4

Section 4

File the operating instructions of the machine in this section.

Chapter 4: Intentionally left blank.

Functional Description

5

Section 5

explains the machine principle and describes its function in normal conditions.

Furthermore it describes the structure and function of individual assemblies.

Chapter 5

Contents

1 General 1

2 Film Transport Diagram 3

3 Functional Differences 4

3.1 Differences according to type numbers 4

3.2 Differences according to serial numbers 4

4 Functional Sequences 6

4.1 Switch-on cycle 6

4.2 Flow chart of the switch-on cycle 7

4.2.1 Initialization and start phase 8
4.2.2 Filling phase 11
4.2.3 All tank levels reached 13
4.2.4 Heating phase 14

4.3 Film drive 18

4.4 Flow chart of the film drive 19

4.4.1 Start of film cycle 20
4.4.2 Film processing 21
4.4.3 Film drying 22
4.4.4 Film transport into the film chute 23

5 Individual Functions 24

5.1 Water supply 24

5.1.1 Filling phase: Water tank empty detection 24
5.1.2 Water supply during film cycle: 25

5.2 Developer / fixer replenishment 26

5.3 Automatic water tank draining / algae prevention 28

5.4 Jog cycle: developer / fixer replenishment per hour 29

5.5 Solution circulation; function of the synchro-motor pumps 30

5.6 Control of the developer heater 31

5.7 Control of the fixer heater 31

5.8 Control of the dryer 32

5.8.1 Dryer test during heating phase 33
5.8.2 Dryer control during film cycle 34

5.8.3 Table: Delay times of the IR-heaters depending on the process 35
5.8.4 Error messages of the dryer control 35
5.8.5 Dryer step setting 36
5.9 Transformer 38
5.10 Drive motor 38
5.11 Temperature measuring 39
5.12 Level detection 39
5.13 Current sensor 39
5.14 Power failure 39
5.15 Data saving 40
6 Roller Diagram 41
6.1 Classic E.O.S. (Type 5270/100) 41
6.2 Classic E.O.S. CL (Type 5270/105) 42

1 General

The Classic E.O.S. (Classic E.O.S CL) is a film processor for medical x-ray films.

It implements the EOS technology (Ecologically Optimized System) – a double fixer tank system, which reduces considerably the silver carry-over into the water tank.

Technical functions between the fixer tanks

Fixer tank 1 (F1) and fixer tank 2 (F2) are connected via an opening at the upper edge of the intermediate wall. In fixer tank 1 (F1) the film is almost completely fixed, compared to fixer tank 2 (F2) the silver concentration is quite high.

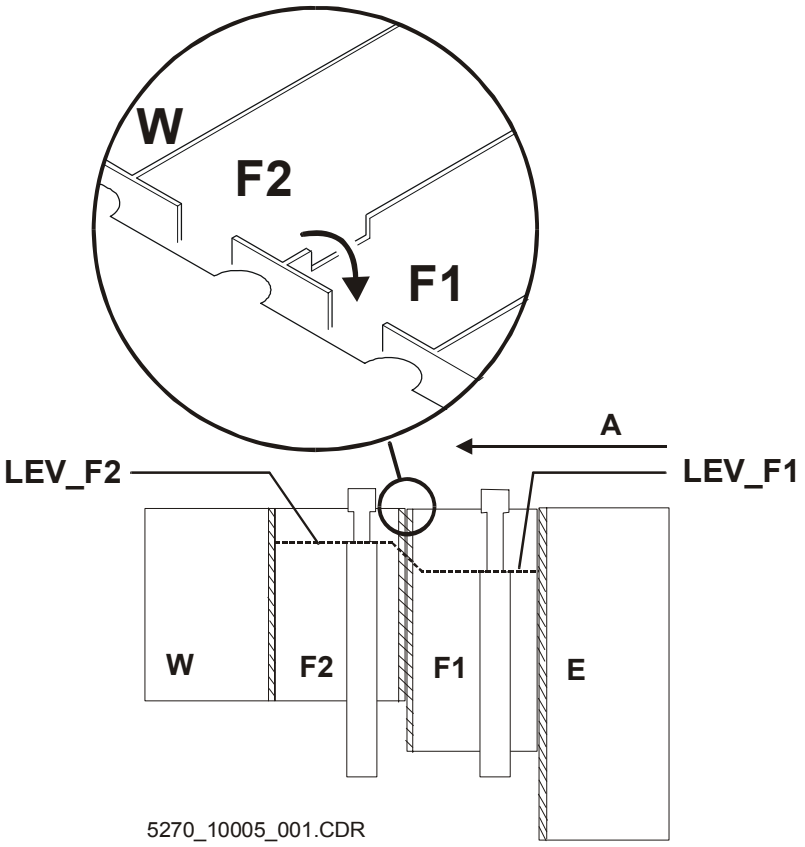

Figure 1

A	Film transport direction	**W**	Water tank
E	Developer tank	**LEV_F1**	Level fixer 1
F1	Fixer tank 1	**LEV_F2**	Level fixer 2
F2	Fixer tank 2		

Fresh fixer is added to tank F2 and is heated. The higher fixer level in tank F2 spills over into tank F1 through the opening in the intermediate wall. At the same time the same amount of fixer is drained via the F1 tank drain.

The tank circulation mixes the fresh fixer with the fixer solution in tank F1.

This circulation provides for an even temperature distribution in the fixer.

The fixing process with two tanks reduces the silver concentration in the second tank, and less silver is carried over into the water tank.

In case of a standard water supply of 3 l/min the remaining silver concentration in the water drained through the water tank overflow is less than 1 ppm.

2 Film Transport Diagram

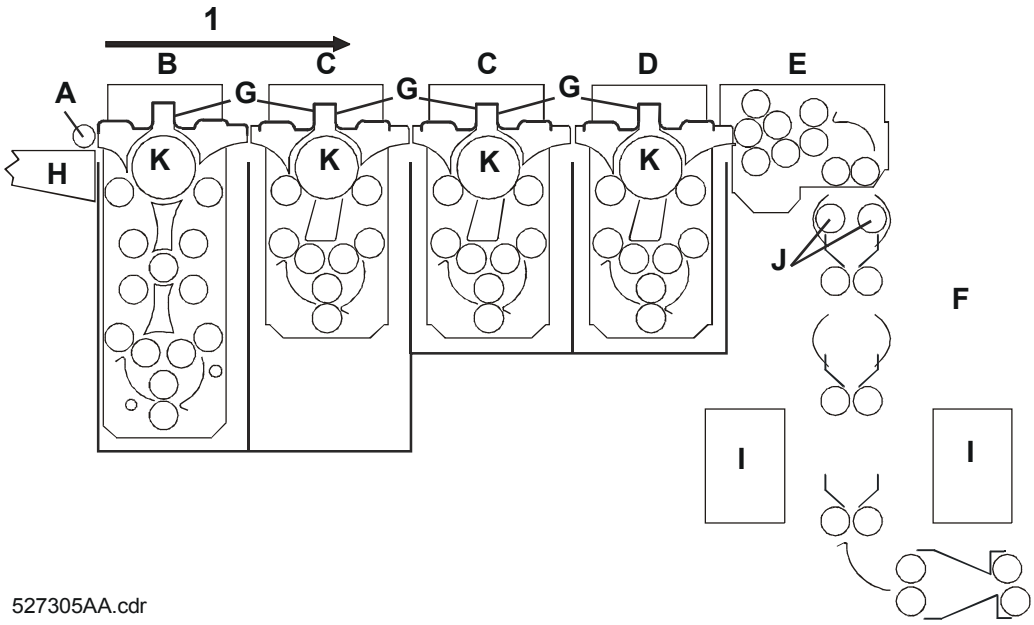

Figure 2

Film handling:

1	Film transport direction	**F**	Dryer
A	Film scanner rollers	**G**	Upper rack guides (crossovers)
B	Developer tank + rack	**H**	Film feed table (only for type 5270/100)
C	Fixer tank 1, 2 + rack	**I**	Dryer: Cross flow fan / convection heater
D	Water tank + rack	**J**	Dryer: IR-heaters
E	Distribution rollers	**K**	Racks: Central roller / main rack drive

- The film is inserted via the feed table (H) and is then pulled into the machine over magnetic rollers. The magnetic rollers scan the film size.
- The transport rollers of the film processor transports the film through the developer tank (B), the fixer tanks 1 and 2 (C), the water tank (D) and the dryer (F).
- Replenisher pumps meter the supply of fresh developer and fixer solution to the tanks (B, C). The water tank (D) is supplied directly by the water installation system. Exhausted chemicals are collected in external tanks, waste water is drained into the sewer system. The amount of replenished chemicals is based on the processed amount of film and the PROCESS application.

3 Functional Differences

3.1 Differences according to type numbers

The Classic E.O.S Type 5270/100 is a film processor with standard racks.

The film processor Classic E.O.S CL Type 5270/105 has been designed for connection with the Laser Imager 3300.

The differences of the Classic E.O.S CL Type 5270/105 and the Classic E.O.S Type 5270/100 are:

- Instead of a feed table the machine has a docking unit for connection with the Laser Imager 3300.
- The control panel is located on the side of the machine.
- 24 V replenisher pumps for developer and fixer.
- “Autofill” – function for the replenisher tanks integrated.

3.2 Differences according to serial numbers

Only downward compatible ⬅ ➡ **Only upward compatible**

Differences	**Type 5270/100 <SN4500** **Type 5270/105 <SN1500**	**Type 5270/100 ≥SN4500** **Type 5270/105 ≥SN1500**
Control Board PCB1	F8.5270.7750._/ F8.5270.7950._ (Label on PCB1, no part number!) Compatible with the software versions CEOS 1303-1801, MEOS 1201-1401 and EOSUNIV1007	F8.5270.7890._ (Label on PCB1, no part number!) Compatible with Software Version CLLC 1107
⚠	**Only the software versions CEOS1303-1801, MEOS 1201-1401, and ESOUNIV1007 must be installed on Control Board F8.5270.7890._!**	**Only software version CLLC 1107 and higher must be installed on Control Board F8.5270.7750._ and/or F8.5270.7950._!**
Water circulation pump 0M4	0M4 Standard 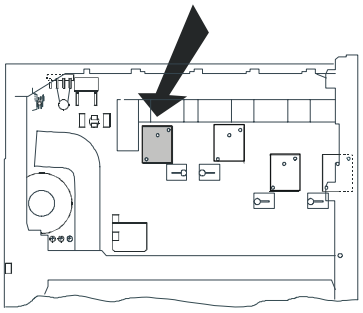	0M4 Option 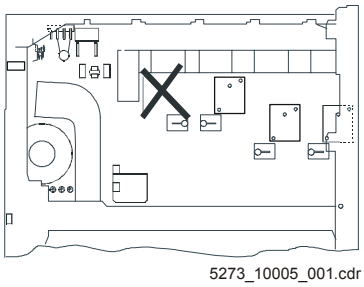 5273_10005_001.cdr
Cross flow fan	24V	230V
Level sensors in fixer tanks	Level sensor only in fixer tank 1	Level sensor in fixer tank 1 and 2

	Only downward compatible	**Only upward compatible**
Differences	**Type 5270/100 <SN4500** **Type 5270/105 <SN1500**	**Type 5270/100 ≥SN4500** **Type 5270/105 ≥SN1500**
Dryer triggering	10 dryer steps 8 Power levels	13 dryer steps 10 Power levels

4 Functional Sequences

4.1 Switch-on cycle

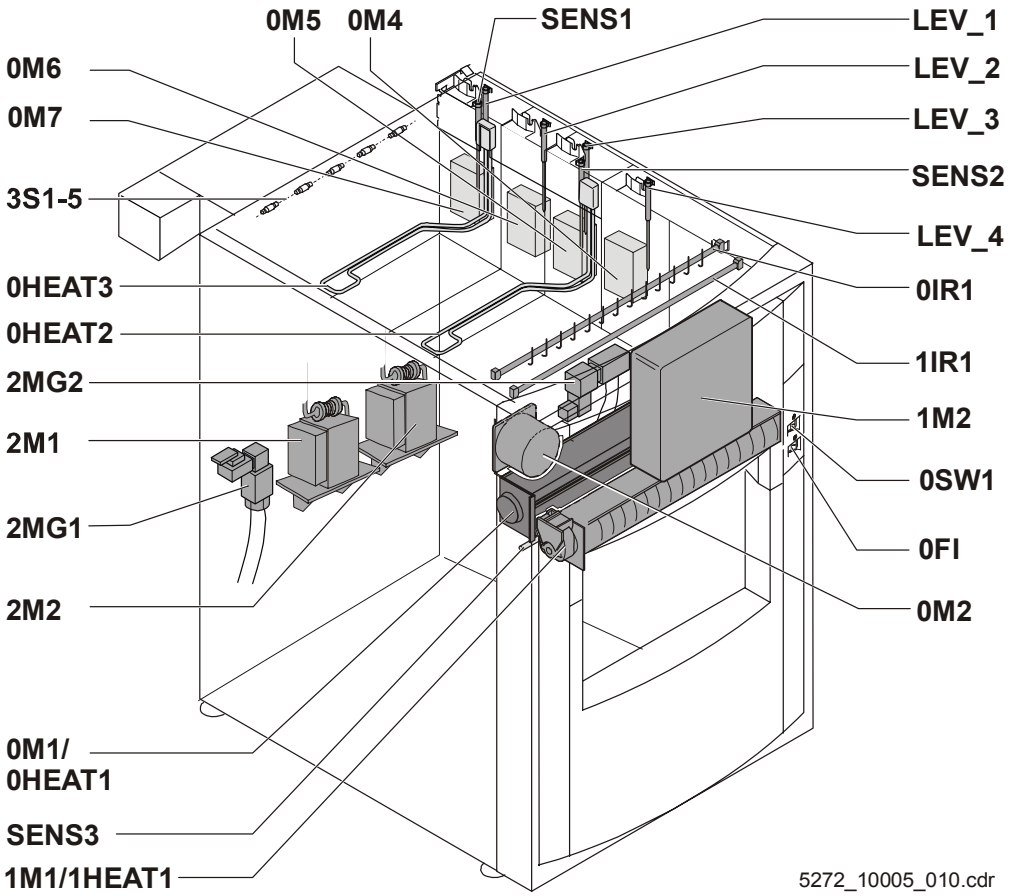

Figure 3

0 = basic machine	**1** = dryer flap	**2** = base	**3** = darkroom feed table

0SW1	Film processor mains switch	**0HEAT1/ 1HEAT1**	Convection heaters
0F1	GFCI switch	**0M1/1M1**	Dryer fan
2MG1	Solenoid valve water supply	**0HEAT3**	Heater developer
2MG2	Solenoid valve water drain	**0HEAT2**	Heater fixer 2
2M1	Dev replenisher pump (Type 5270/100)	**1M2**	Exhaust fan
(2M3)	Dev replenisher pump (Type 5270/105)	**0IR1/1IR1**	IR-heaters
2M2	Fix replenisher pump (Type 5270/100)	**SENS1**	Developer temperature sensor
(2M4)	Fix replenisher pump (Type 5270/105)	**SENS2**	Fixer 2 temperature sensor
0M2	Drive motor	**SENS3**	Dryer temperature sensor
0M4	Water circulation pump	**LEV_1**	Developer level sensor
0M5	Fixer 2 circulation pump	**LEV_2**	Fixer 1 level sensor
0M6	Fixer 1 circulation pump	**LEV_3**	Fixer 2 level sensor
0M7	Developer circulation pump	**LEV_4**	Water level sensor
3S1-5	Magnetic film detection rollers		

4.2 Flow chart of the switch-on cycle

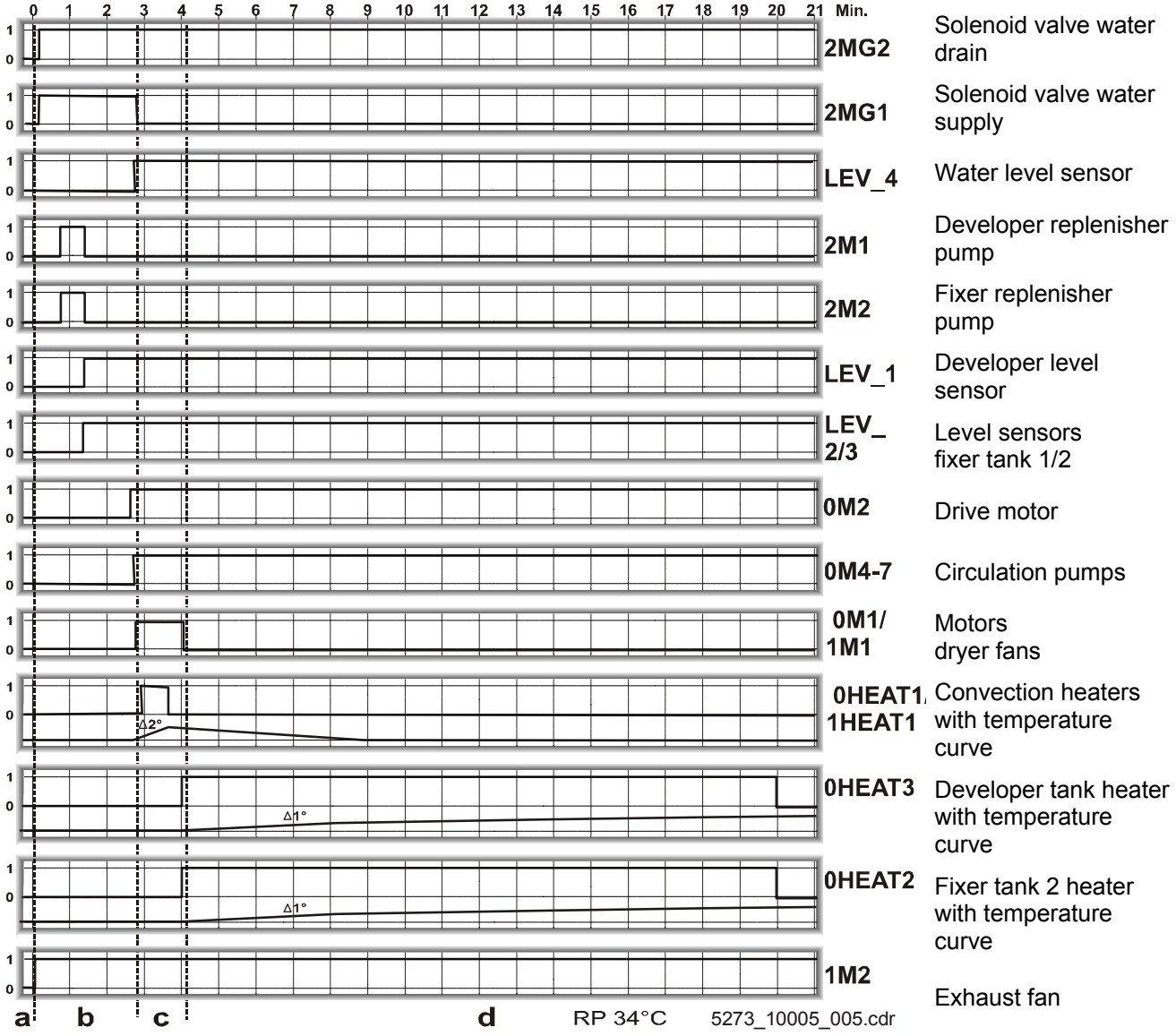

Figure 4

a **Initialization and start phase** (see Section 4.2.1)

b **Filling phase** (see Section 4.2.2)

c **Levels reached** (see Section 4.2.3)

d **Heating phase** (see Section 4.2.4)

Motors: 1 Triggering, motors ON
0 Motor OFF

Sensors: 1 active
0 not active

Heaters: 1 active
0 not active

4.2.1 Initialization and start phase

After switching on the machine (GFI switch 0F1 and mains switch 0SW1 on) the system will be initialized. At first all consumers are off.

- The machine executes a RESET (no BASEINIT).
- All process data is set.
- All data in the EEPROM (also customer specific data) is kept.
  The control panel is loaded.

After the initialization in the starting phase, the following functions will be checked:

4.2.1.1 After switching on

- **Calibration of the replenishment rates after machine installation:**
  Internal check if developer and fixer replenishment rates have been calibrated.
  If they are not, a display request the calibration:

```
Cal Dev Pump
goto Test/Adjust
```

or

```
Cal Fix Pump
goto Test/Adjust
```

or

```
Cal Dev and Fix
goto Test/Adjust
```

If the replenishment rates for developer and fixer have not been calibrated, drive motor 0M2 will not start.

EMERGENCY FILM processing is not possible!

The machine will not switch to the filling / heating phase!

After the **"First calibration"** procedure was made (during the installation) this check is only repeated in the following **repair cases**:

- Replacement of Control Board PCB1
- Replacement of clock chip IC52

4.2.1.2 Mixer connected? (Option)

Internally the Mixer function is checked, provided a Mixer is connected, and has been activated in the service program

<Service Settings> → <Mixer cond>

If the Mixer level is too low the display reads:

CHECK MIXER

And the respective replenisher pump will not be triggered if a replenisher tank is empty. The machine rejects film feed.

EMERGENCY FILM processing not possible!

4.2.1.3 EOS Wash/Fix connected? (Option)

Internally the correct function of the EOS Wash/Fix is checked, provided the unit is connected assn has been activated in the service program

<Service Settings> → <EOS Fix Cond>

If the function is not OK, the display reads:

CHECK EOS MODULE

4.2.1.4 Level sensors of the replenisher tanks connected on the film processor? (Option)

Internally the system checks if the replenisher tanks of developer and fixer are full, provided the sensors are connected and have been activated in the service program

<Service Settings> → <Dev Fix Suppcond>

In case of empty replenisher tanks the display reads:

```
DEV REPLEN
TANK EMPTY
```

or

```
FIX REPLEN
TANK EMPTY
```

And the respective replenisher pump will not be triggered if a replenisher tank is empty. The machine rejects film feed.

EMERGENCY FILM processing not possible!

4.2.1.5 Level sensors of the disposal tanks connected on the film processor? (Option)

Internally the system checks if the disposal tanks for developer and fixer are full. If they are full the display reads:

```
WASTE TANK
   FULL
```

If a disposal tank is full, the respective replenisher pump will not be triggered and the water supply solenoid valve 2MG1 will be closed. EMERGENCY FILM processing is possible!

4.2.1.6 Anti-algae unit connected on the film processor? (Option)

Internally the system checks if the level of the anti-algae unit is sufficient and has been activated in the service program

<Service Settings> → <Algcid Suppcond>

If the level is too low the display reads:

```
CHECK
ANTI-ALG
```

4.2.2 Filling phase

4.2.2.1 Filling developer and fixer tanks

- The levels in the film processor tanks are checked.
- The levels of the supply and disposal tanks are checked. If the supply tanks are empty or the disposal tanks are full, the developer tank will not be filled.
- If the level in the tanks has dropped, the replenisher pumps for developer 2M1 and fixer 2M2 will be switched on. The tanks are filled until the level sensors LEV_1, LEV_2, and LEV_3 react or until a maximum of 1200 ml each has been supplied. If a level cannot be reached the following error messages will be displayed:

```
Developer
  Level
```

or

```
Fixer
Level
```

and the switch-on cycle is interrupted.

Flow chart for the developer tank filling:

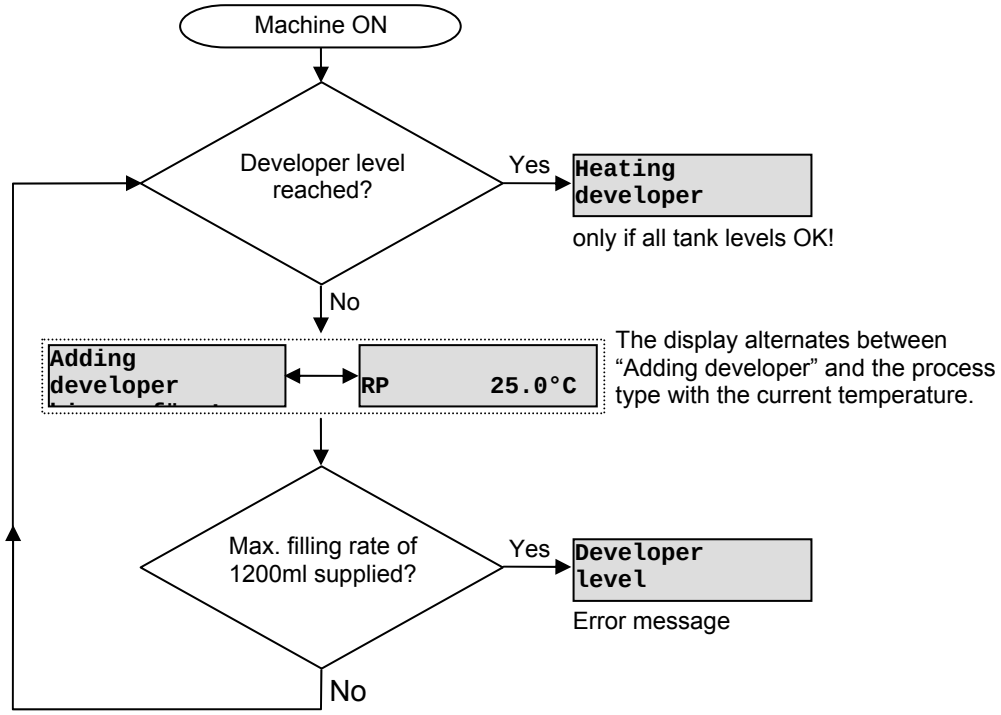

Flow chart for the fixer tank filling:

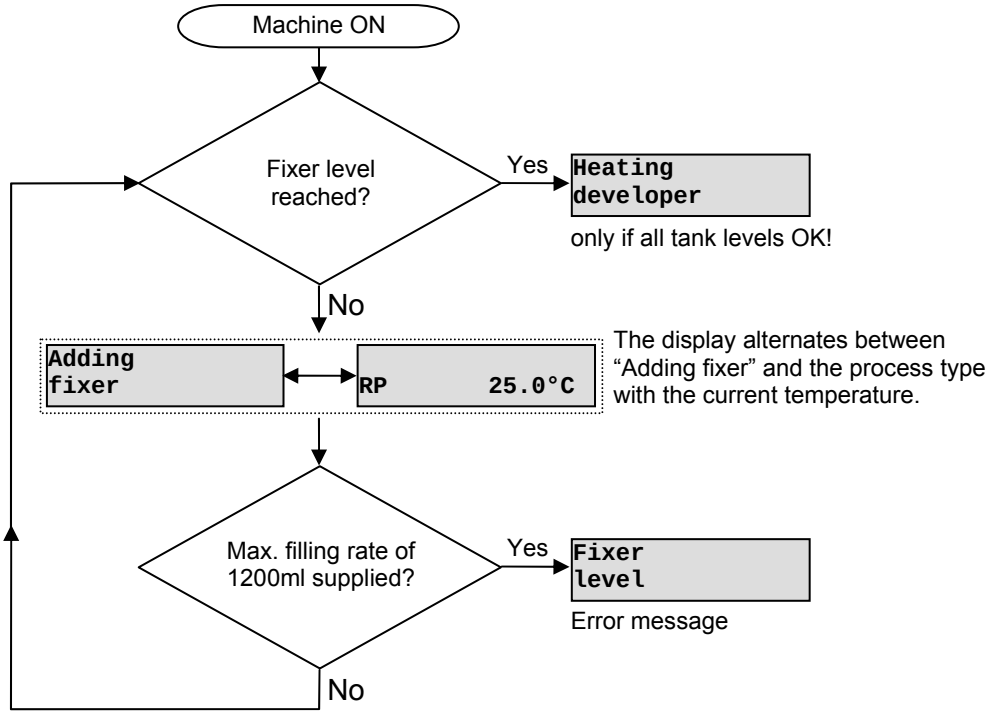

4.2.2.2 Filling the water tank

If the water level is too low the water supply solenoid valve 2MG1 opens. Once the water level sensor LEV_4 detects a full water tank, the water supply solenoid valve 2MG1 is closed after a delay of 5 seconds. If it was not possible to reach the water tank level within 7 minutes the error message

Water Level

will be displayed and the switch-on cycle is aborted. The switch-on cycle must be repeated after the problem has been solved (e.g. by opening the water tap) by switching the film processor off and on again.

Flow chart for the water tank filling function:

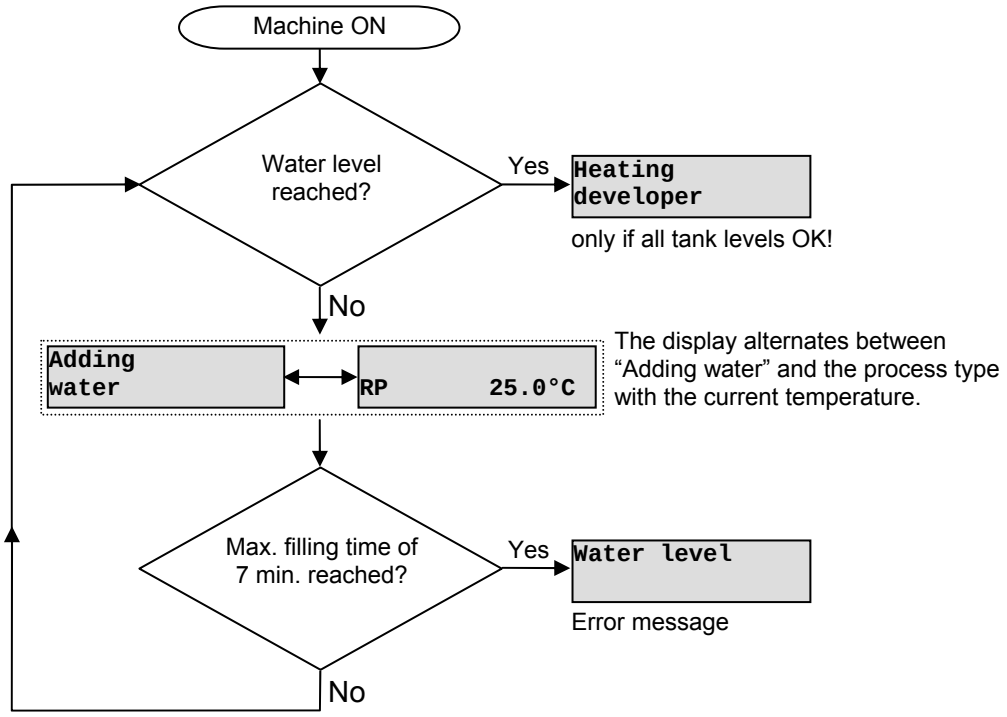

4.2.3 All tank levels reached

- All circulation pumps – developer 0M7, fixer1 0M6, and fixer2 0M5 switch on.
- Drive motor 0M2 starts at 41 rpm (corresponds to 0.5 m/min of film transport speed).

4.2.4 Heating phase

Developer and fixer heaters will only be switched on after the levels in developer, fixer, and water have been reached. The temperature indicated on the machine display always refers to the temperature in the developer.

- The cross-flow fans (dryer fans) 0M1/1M1 are triggered.
- The convection heaters 0HEAT1/ 1HEAT1 are switched on in addition.
- After 30 seconds the temperature must have increased by at least 2°C (measured by the dryer temperature sensor SENS3). Otherwise the cross flow fan and the convection heaters switch off, (error message Service 505).
- After the functional check the convection heaters switch off again.
- The cross flow fans run for about another 30 seconds (delay).
- Afterwards, Control Board PCB1 triggers the heaters in the developer/fixer tanks, but only if the respective solution level in the developer/fixer tanks has been reached.
- The temperature increase in the solutions is monitored during the heating phase. If the temperature increases less than 1°C within a period of 4 minutes, the following messages will be displayed:

Service 502	(developer temperature too low)

and/or

Service 504	(fixer temperature too low)

4.2.4.1 Flow chart of the developer heating function:

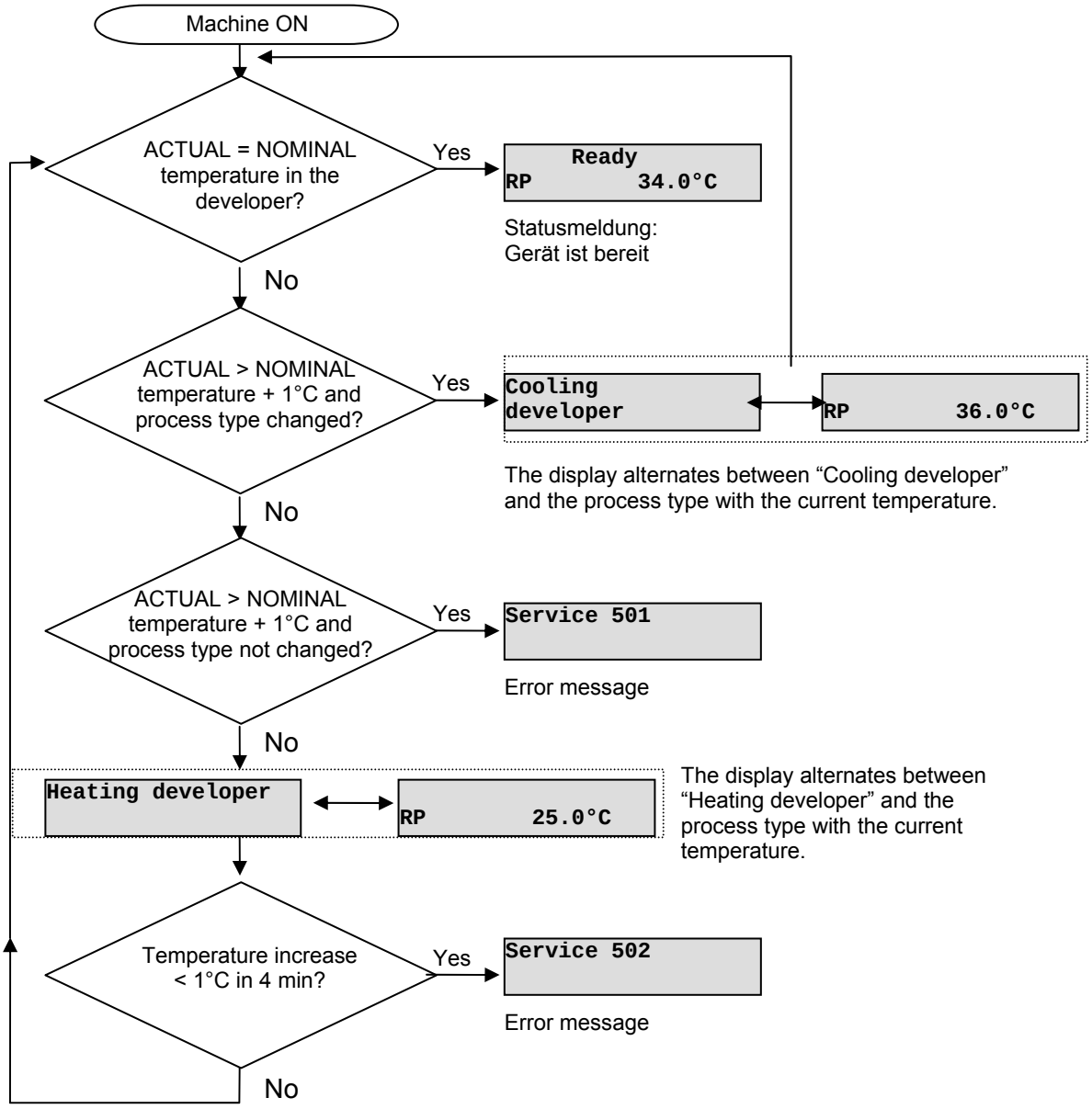

4.2.4.2 Flow chart of the fixer heating function:

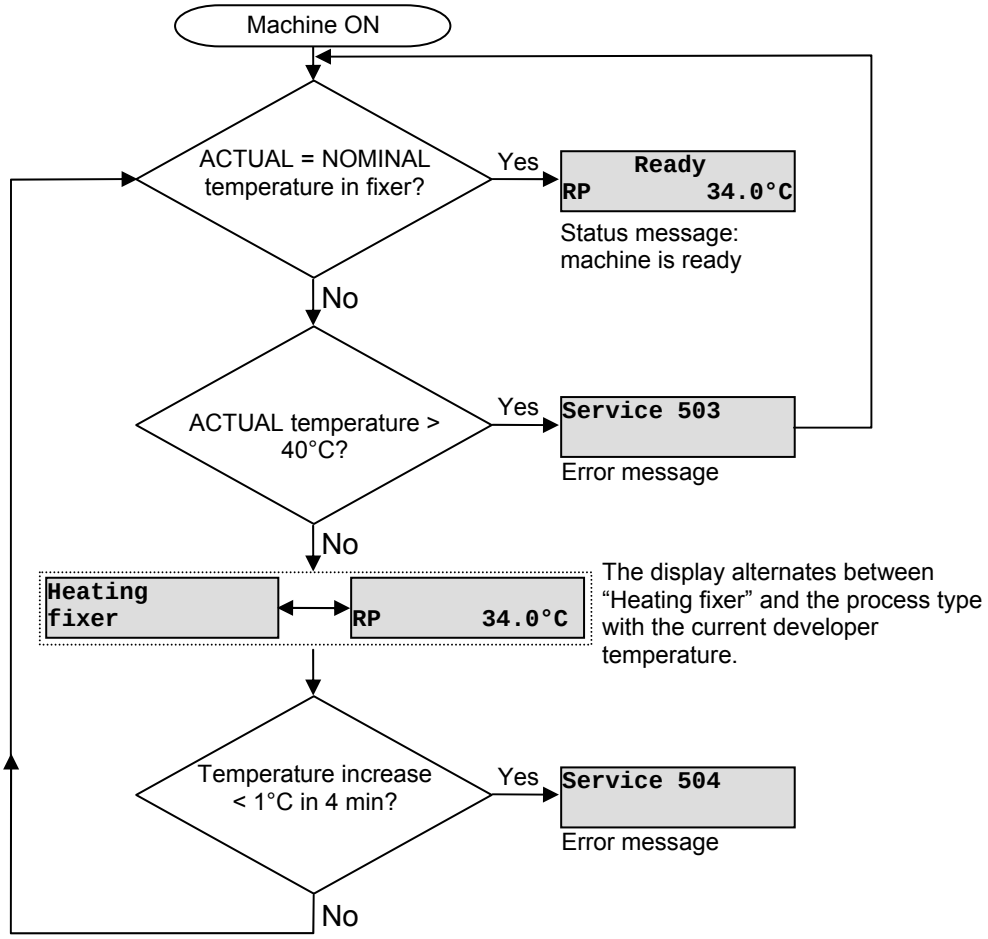

4.2.4.3 Temperature control for developer / fixer heating
Developer:

The heating phase in the developer ends when the ACT temperature deviates by less than 0.5°C from the NOM temperature.
Display:

```
Ready
IP          36°C
```

Temperature regulation:

Heater OFF: ACT dev. temp. = NOM dev. temp.
Heater ON: ACT dev. temp. below NOM dev. temp.
(ACT dev. temp. < NOM dev. temp. -0.1°C)
In case of a deviation of –0.1°C to –1.0°C the developer heater will switch on and the machine remains ready for film processing.

- The machine goes back to heating phase (machine not ready), if the ACT temperature is more than 1°C below NOM temperature.
  Display for example:

```
IP          34.8°C
```

- If the developer temperature is more than 1°C above the NOM temperature, the display reads:

```
Service 501
```

- However, if the reason why the developer temperature is more than 1°C above NOM temperature is a change in the process type (and thus a different NOM temperature) or in the developer temperature, the machine will switch to “cooling phase”.

EMERGENCY FILM processing is possible and the display reads:

```
Cooling
developer
```

```
RP          35.5°C
```

This display alternates with the status display (newly selected process type and current developer temperature).

- Fast cooling down is possible:
  Carefully pour cold developer of the replenisher tanks into the developer tanks.

Fixer:

- The heating phase ends when the NOM temperature of 34°C has been reached. The machine goes back to heating phase if the ACT temperature in the fixer drops below 30°C.
- If the fixer temperature is above 40°C, the display reads:

```
Service 503
```

Sequence for the developer cooling:

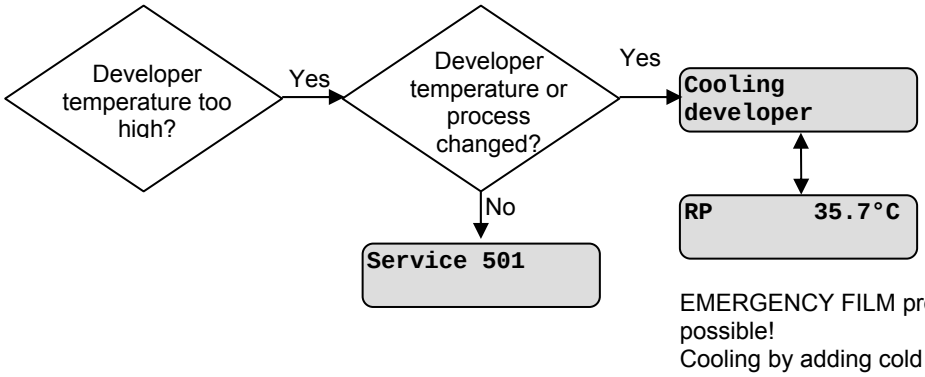

4.3 Film drive

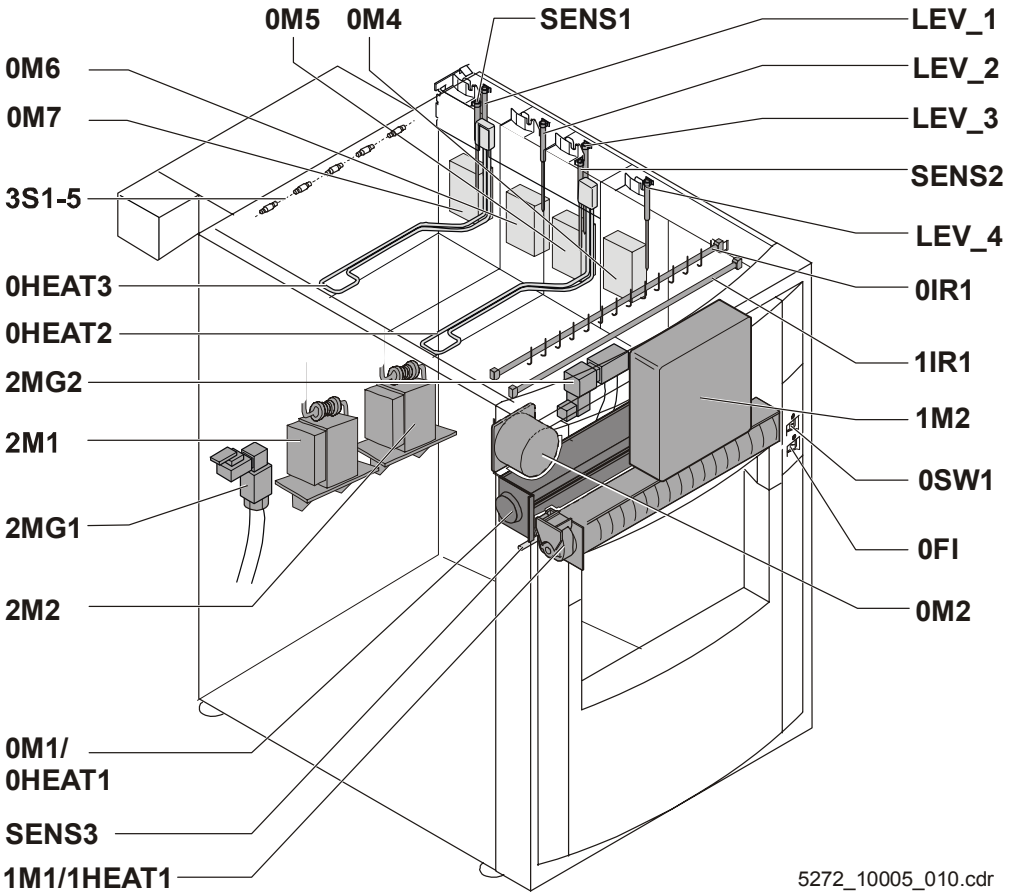

Figure 5

0 = basic machine	**1** = dryer flap	**2** = base	**3** = darkroom feed table

0SW1	Film processor mains switch	**0HEAT1/ 1HEAT1**	Convection heaters
0F1	GFCI switch	**0M1/1M1**	Dryer fan
2MG1	Solenoid valve water supply	**0HEAT3**	Heater developer
2MG2	Solenoid valve water drain	**0HEAT2**	Heater fixer 2
2M1	Dev replenisher pump (Type 5270/100)	**1M2**	Exhaust fan
(2M3)	Dev replenisher pump (Type 5270/105)	**0IR1/1IR1**	IR-heaters
2M2	Fix replenisher pump (Type 5270/100)	**SENS1**	Developer temperature sensor
(2M4)	Fix replenisher pump (Type 5270/105)	**SENS2**	Fixer 2 temperature sensor
0M2	Drive motor	**SENS3**	Dryer temperature sensor
0M4	Water circulation pump	**LEV_1**	Developer level sensor
0M5	Fixer 2 circulation pump	**LEV_2**	Fixer 1 level sensor
0M6	Fixer 1 circulation pump	**LEV_3**	Fixer 2 level sensor
0M7	Developer circulation pump	**LEV_4**	Water level sensor
3S1-5	Magnetic film detection rollers		

4.4 Flow chart of the film drive

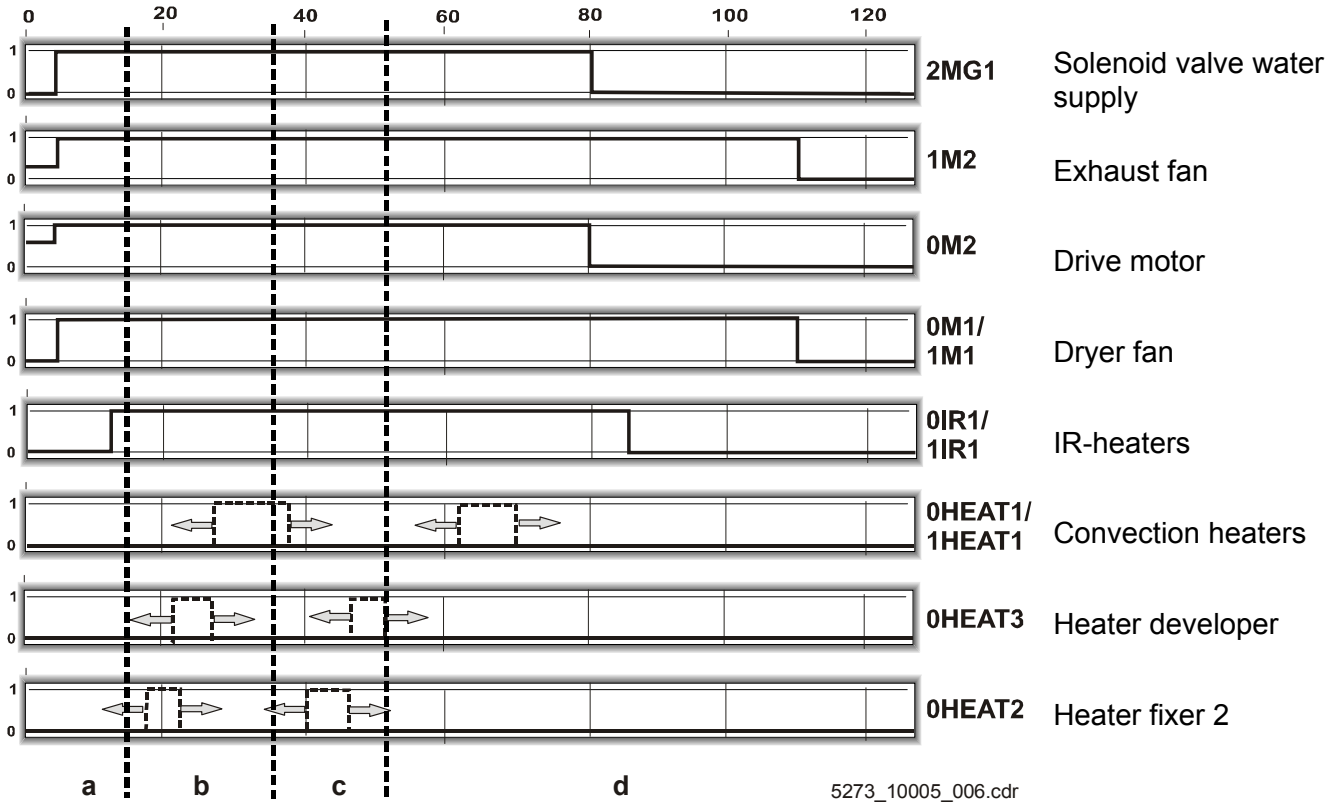

Figure 6

a **Start film cycle** (see Section 4.4.1)
b **Film processing** (see Section 4.4.2)
c **Film drying** (see Section 4.4.3)
d **Film transport to film chute** (see Section 4.4.4)

Motors: 1 Triggering, motors ON
0 Motor OFF
Sensors: 1 active
0 not active
Heaters: 1 active
0 not active

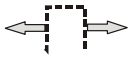 switch point and time (variable)

4.4.1 Start of film cycle

4.4.1.1 Standby phase

All conditions for normal film processing are satisfied:

- Levels in developer, fixer, and water tank reached
- NOMINAL temperatures in developer and fixer tanks reached
- Drive motor in permissible speed range, depending on the code
- Mixer / replenisher tanks full
- Disposal tanks empty
- The display reads, for example:

```
RP          34.0°C
```

The operator feeds film via the feed table.
The magnetic roller detection 3S1-5 at the feed table detects the film transport pulses.

4.4.1.2 Sequence of the film feed detection

Within a process dependent time frame at least 3 pulses per magnetic roller must be counted.

If less than 3 pulses per magnetic roller are detected, this is indicated by a signal of

three short buzzer signals	=	problem in film feed; film transport stopped. Attention: Film lies on the feed table. Risk of fogging!

If the required number of pulses was counted, the film drive starts.

Permanent film drive starts:

- Drive motor 0M2 for film processing switched on.
- Exhaust fan 1M2 is set to full speed.
- The dryer fans 0M1/1M1 switch on.
- The convection heaters 0HEAT1/1HEAT1 heat up to nominal temperature (temperature sensor SENS3).
- The IR-heaters 0IR1/1IR1 are switched on for 5s with a power of 70V (lowest power setting), even if the code of the dryer setting does not include the IR-heaters.
- Every 0.25 m^2 of processed film developer and fixer are replenished according to the set replenishment rate.
- The processed amount of film is detected by the pulses of the magnetic rollers.

4.4.1.3 Emergency film cycle

EMERGENCY FILM processing is only possible when all LEVELS have been reached. Once the tanks have been filled, the machine is ready for emergency film during the heating phase.
If a film is fed in this phase the display reads:

```
EMERGENCY FILM
PLEASE WAIT
```

And a long acoustic signal (1s) indicates that the film has been accepted as an emergency film. Once the film passed through the feed rollers, the display changes back to the developer temperature and process time.
The display “EMERGENCY FILM” during film feed informs about the machine status! It must be considered that the film processing quality is not standard quality!
Check the current ACT developer temperature in the tank!

4.4.2 Film processing

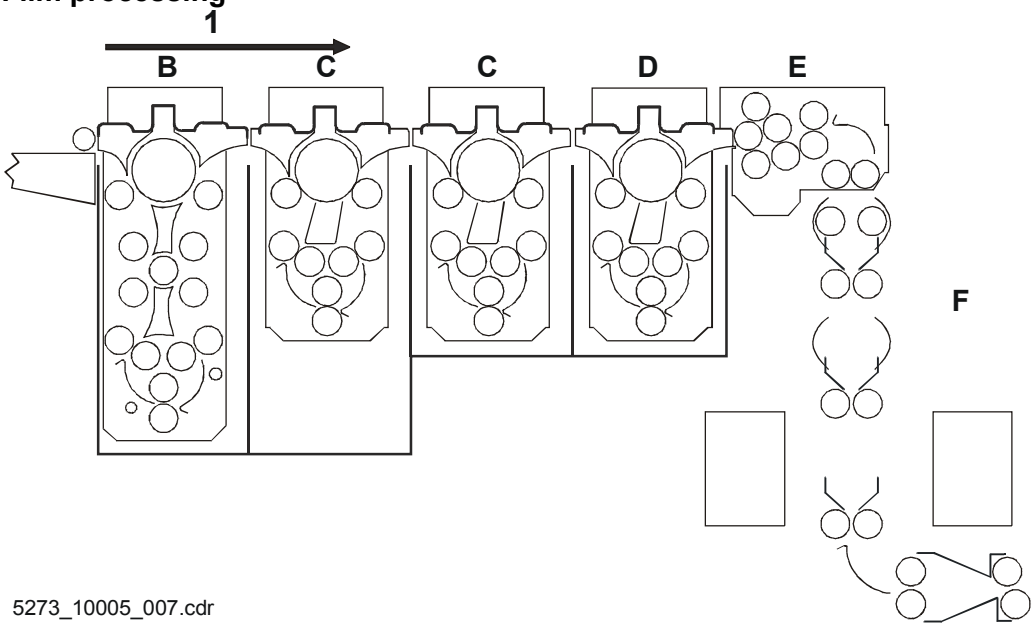

Figure 7

1 Film transport direction

- The film is processed according to the selected process type (HT (60s), IP (90s), RP (2min), EXT (3min), (see Chapter 03)).
- The film runs through the developer (B), fixer 1 (C) and fixer 2 (C), and afterwards through the water (D). Then the film is transported into the dryer (F) via the distributor rollers (E).
- The replenisher pumps 2M1 and 2M2 are triggered always after the processing of 0.25 m^2 film.

4.4.3 Film drying

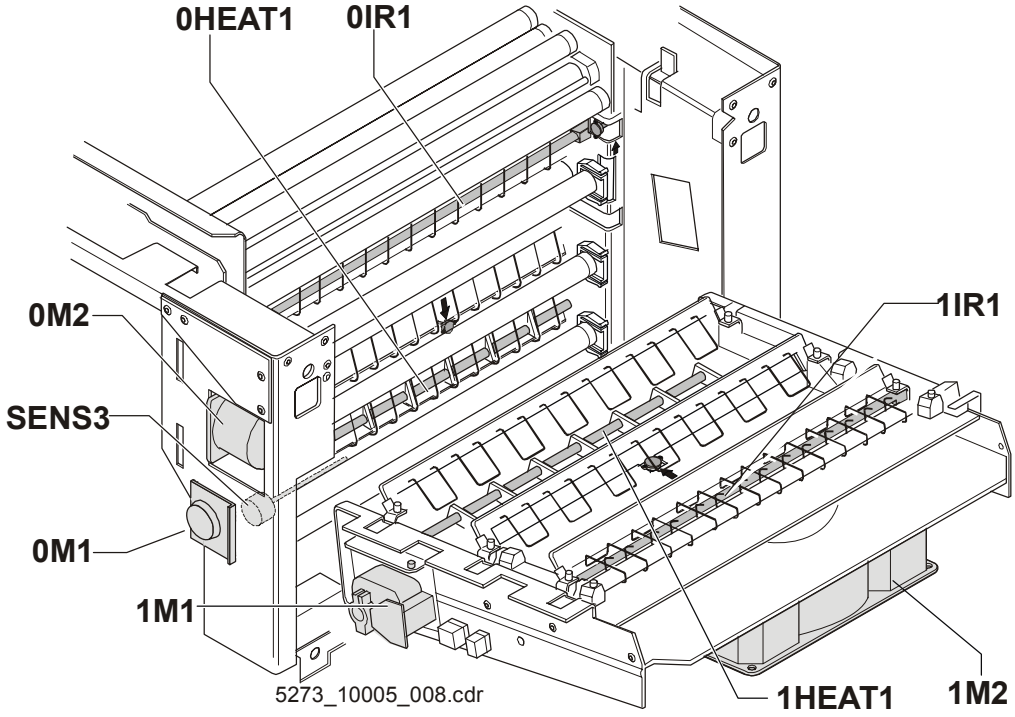

Figure 8

- The film runs from the water distributor unit downwards into the dryer.
- The IR-heaters 0IR1/1IR1 were switched on after the film was reliably detected in the film processor.
- The temperature in the dryer fan 0M1/1M1 is monitored by the sensor SENS3 and, if necessary, the convection heaters 0HEAT1/1HEAT1 are switched on as well.
- At the end of the drying process the film drops into the film chute.

4.4.4 Film transport into the film chute

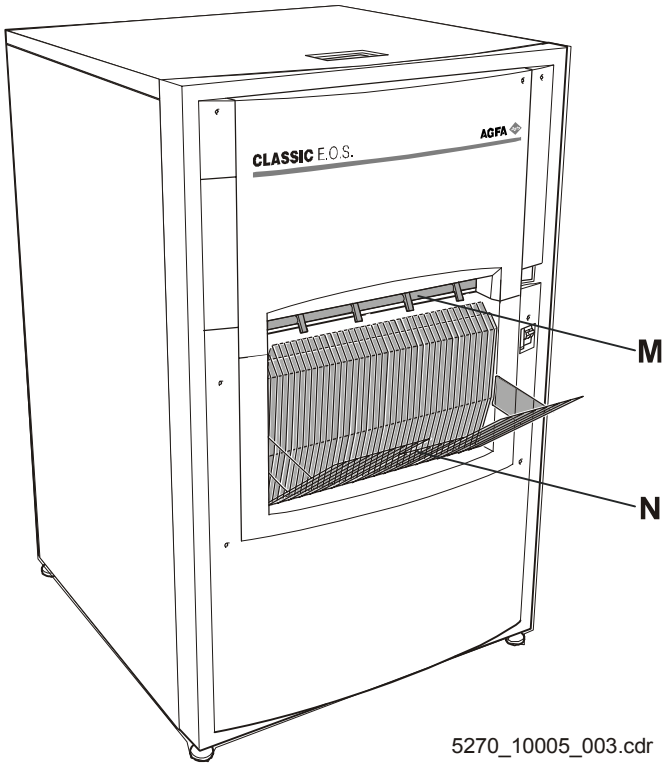

Figure 9

- The film is transported out of the transport rollers (M) and into the film chute (N).
- The IR-heaters switch off. The process is complete.
- After the IR-heaters switched off, main drive 0M2 switches off as well (DRIVEON = N) or switches to standby speed (DRIVEON = Y).
- 30s after the IR-heaters switched off the dryer fans 0M1/1M1 switch off as well.
- The water supply solenoid valve 2MG1 closes.
- Exhaust fan 1M2 switches back to half-power, or switches off completely.

5 Individual Functions

5.1 Water supply

5.1.1 Filling phase: Water tank empty detection

If the water level is to low, water will be refilled after the machine was switched on. The tank must be filled within a maximum time of 7 minutes.
The drive motor does not run during this filling phase. The display reads:

```
PLEASE WAIT
```

Feeding EMERGENCY FILM is not possible!

Once the water tank level was reached, the level may only drop again during operation that the tank can be refilled within 30 seconds. If the tank cannot be filled within this time the following error message is displayed:

```
Water
level
```

This is indicated by an intermittent buzzer signal and the water supply solenoid valve is closed.

EMERGENCY FILM processing is possible!

5.1.2 **Water supply during film cycle:**
Water supply during the film cycle depends on the coded replenishment mode. The replenishment modes can be set up via code in the service program:

5.1.2.1 Water supply during a film cycle

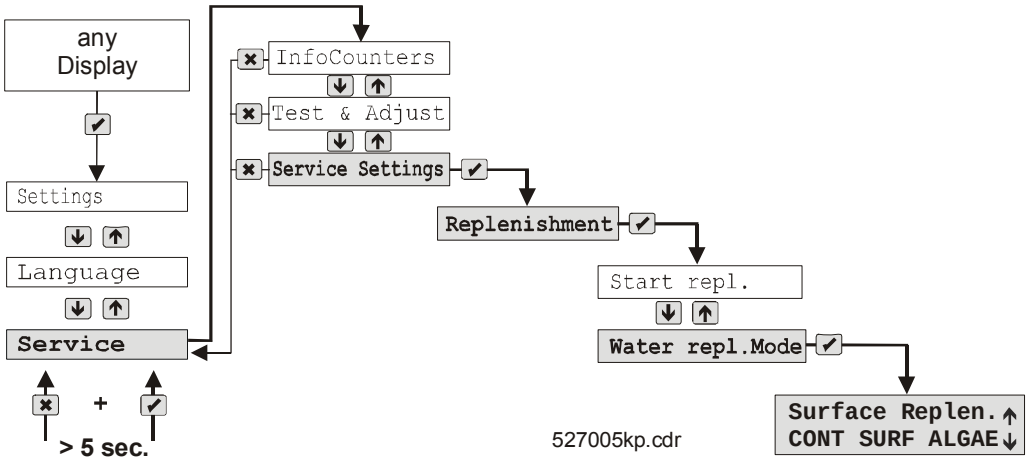

CONT:
Water supply starts when film feed is detected and ends with the end of the processing time.

SURF:
Water replenishment starts just before the film reaches the water tank. The time between film feed and start of water replenishment varies with the different process types.
The water supply rate is set up in the SERVICE program **<Wat. Repl. Value>**.

ALGAE:
Prevention of algae: mode CONT. + 5min.
In addition there is a 5 minutes water supply every 30 minutes as long as no film is developed during this time.

5.2 Developer / fixer replenishment

The replenishment of developer and fixer depends on the processed amount of film.
A replenishment cycle starts per 0.25 sqm of processed film.
The actual replenishment rate is then the result of the replenishment time:

$$\text{Replenishm. time} = \frac{\text{Set replenishment rate ml/sqm}}{\text{pump rate (ml/min)}} \times \text{processed film in sqm} \times 60$$

The replenishment time is worked out by the machine according to the above formula and based on the entered “pump rate” and the desired replenishment amount per square meter.

Replenishment time in seconds;	
Set replenishment rate	(see Chapter 3, Setup of process parameters)
Pump rate in ml/min	(see Chapter 3, Calibration of the replenishment rate)
Processed amount of film in square meters	Automatic calculation based on the pulses of the magnetic rollers.

Example:

- Pump rate 150ml/min (5.07 fl.oz./min),
- Set replenishment rate 400 ml/m^2,
- film amount in 0.25 sqm

$$\text{Replenishm. time} = \frac{\text{400 ml/sqm}}{\text{150ml/min}} \times 0.25 \text{ sqm} \times 60 = 40 \text{ s}$$

During replenishment the supplied replenisher rate is recorded per second.
After-replenishment takes place after a problem has been solved or after a power interruption. If the replenishment is interrupted (disposal tanks full, replenisher tanks empty, machine OFF) the missed replenishment amount is stored in the clock chip.
Once the correct operation continues, the missing replenishment is added.
If the machine needs more than 10 minutes for this added replenishment, the interval time between two films will be doubled, and after another 15 minutes it will be doubled again.
If the added replenishment time needs 20 minutes, the following message is displayed:

<**Please wait**>

If you feed film the display reads:

<**Emergency film**>

If the added replenishment time is below 10 minutes, the machine switches to standby status.

The data of the pump replenishment rate is stored in the battery supplied clock chip IC52! In case of an empty battery or if a new clock chip is inserted (e.g. replacement of PCB1), the machine requests a “new calibration”!

5.3 Automatic water tank draining / algae prevention

To avoid the growth of algae an automatic water tank drain can be activated. This function can be set up in the service program:

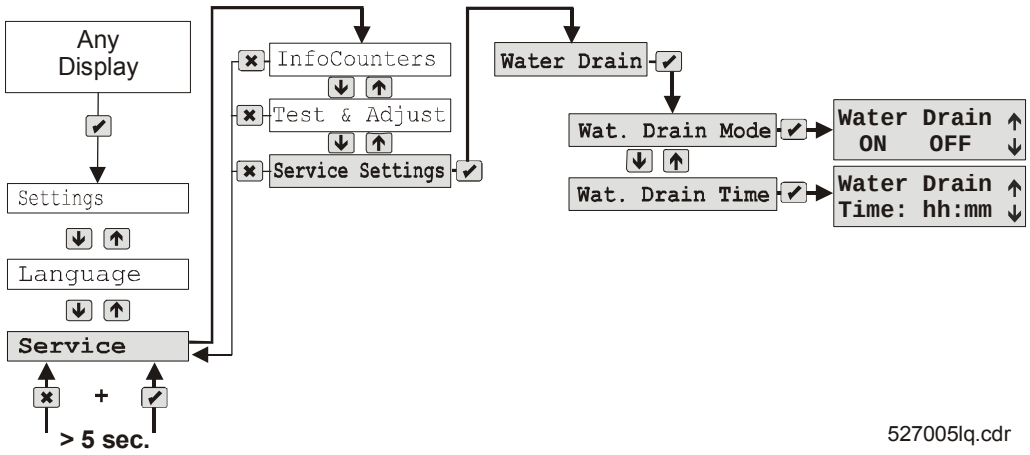

A timer is triggered after machine switch-on.

Water tank being flushed

alternating with the display

Please wait

Adding water

The water tank draining is only activated, if

- the set time has been reached, and
- the machine was switched on without interruption for 24:00 hours.

Emergency film processing is not possible during this time!

If the time for tank draining comes during film cycle, the activation of the tank draining will be delayed until the film processing cycle is completed.

If a film is fed while the water is being drained, the water drain valve will close immediately. The water tank will be filled.
Tank draining starts again after the film processing has been completed!

5.4 Jog cycle: developer / fixer replenishment per hour

This function can be set up in the service program and is activated per default:

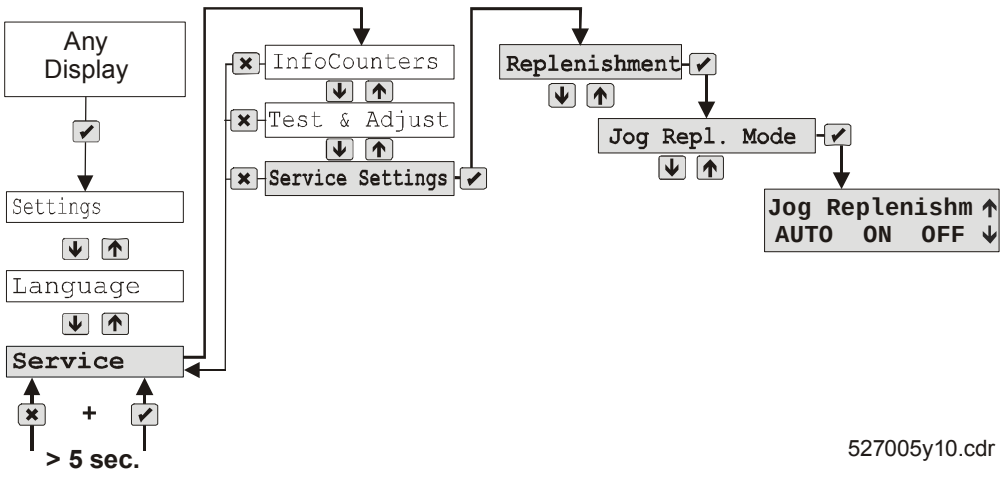

OFF:
Jog cycle is inactive.

ON:
Jog cycle is activated. Every hour the replenishment rate set up in the service program for developer and fixer is replenished.

AUTO:
If the AUTO mode has been set up in the service program (only for stand-alone machines), the developed film amount per day is worked out. Upon switching on the machine compares the current date with the date of the last switch-off. If the dates are not corresponding, the film amount processed last will be checked. If this amount is less than 3 sqm, the jog cycle will be activated, otherwise it remains inactive.
Date, processed amount of film in square meters, and jog cycle mode are saved in the infocounter, whereby always the last 10 working days are recorded. Entry 11 overwrites the first recording.

5.5 Solution circulation; function of the synchro-motor pumps

Circulation is provided by the circulation pumps with synchro-drive (a rotating magnetic field drives a pump rotor with permanent magnet).

The circulation pumps guarantee a continuous circulation in the developer (0M7), fixer 1 (0M6), fixer 2 (0M5), and as an option in the water tank (0M4).

The circulation pumps 0M4-0M7 are switched on as soon as the levels of developer, fixer (fixer 1 / fixer 2), and water have been reached.

Start of the synchro-motor pumps:
After switching on the synchro-motors of the circulation pumps are triggered. If there is no OK signal from the motors after 67 s, a new trigger attempt is made. The system makes 2 attempts maximum. If then there is still no OK signal, the error message

<Service 514>	Circulation of developer, fixer 1 or 2
or **<Check water pump>** (corresponds to **<Service 515>**)	Water circulation

is generated.

80 seconds after the OK signal the developer and fixer heaters switch on .

And in addition the synchro-motors are switched off for 5 seconds during film cycle, is the OK signal switches to NOT OK fro more than 15 seconds. This procedure is repeated during the film cycle. If the OK signal fails to come, this will only be indicated at the end of the film cycle.

Which synchro-motor is defective?

LED on/light:	Synchro-motor and circulation pump OK;
LED off/dark:	Synchro-motor defective

The synchro-motors are also triggered in case of a defect to show by means of the LEDs which one of the motors is defective.

5.6 Control of the developer heater

Heater OFF: ACT dev. temp. = NOM dev. temp.

Heater ON: ACT dev. temp. below NOM dev. temp.

(ACT dev. temp. < NOM dev. temp. -0.1°C)

In case of a deviation of –0.1°C to –1.0°C the developer heater will switch on and the machine remains ready for film processing.

Error messages:

1. An error message

   Service 502

   is displayed if there is no temperature increase in the ACT temperature of at least 1°C (1.8°F) within 4 min!

2. A service message

   Service 501

   is displayed if the ACT temperature is at least 1°C (1.8°F) above the NOM temperature.

5.7 Control of the fixer heater

In case of a NOM temperature below 34°C (93.2°F), the fixer heater switches on. Once the NOM fixer temperature has been reached for the first time, the ACT temperature must only vary between 28°C and 40°C (82.4°F and 104°F), or an error message will be displayed. If the temperature is below 30°C (86°F) the machine / display switches to heating phase.

Error messages:

1. An error message

   Service 504

   is displayed if there is no temperature increase in the ACT temperature of at least 1°C (1.8°F) within 4 min!

2. An error message

   Service 503

   is displayed if the ACT temperature is at least 1°C above the NOM temperature.

5.8 Control of the dryer

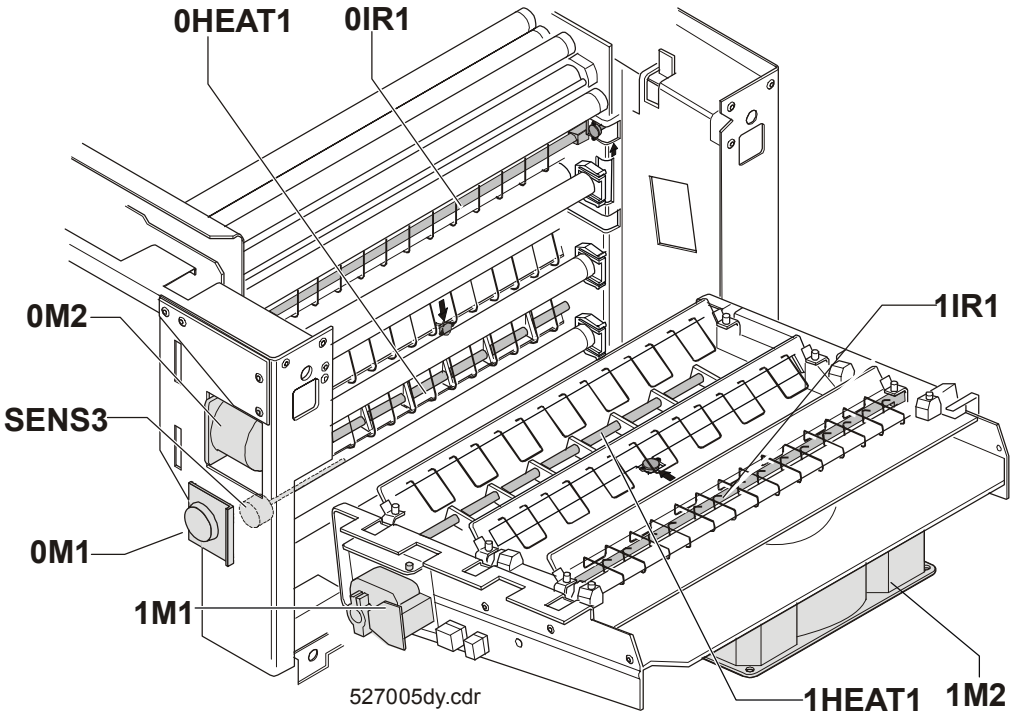

Figure 10

5.8.1 Dryer test during heating phase

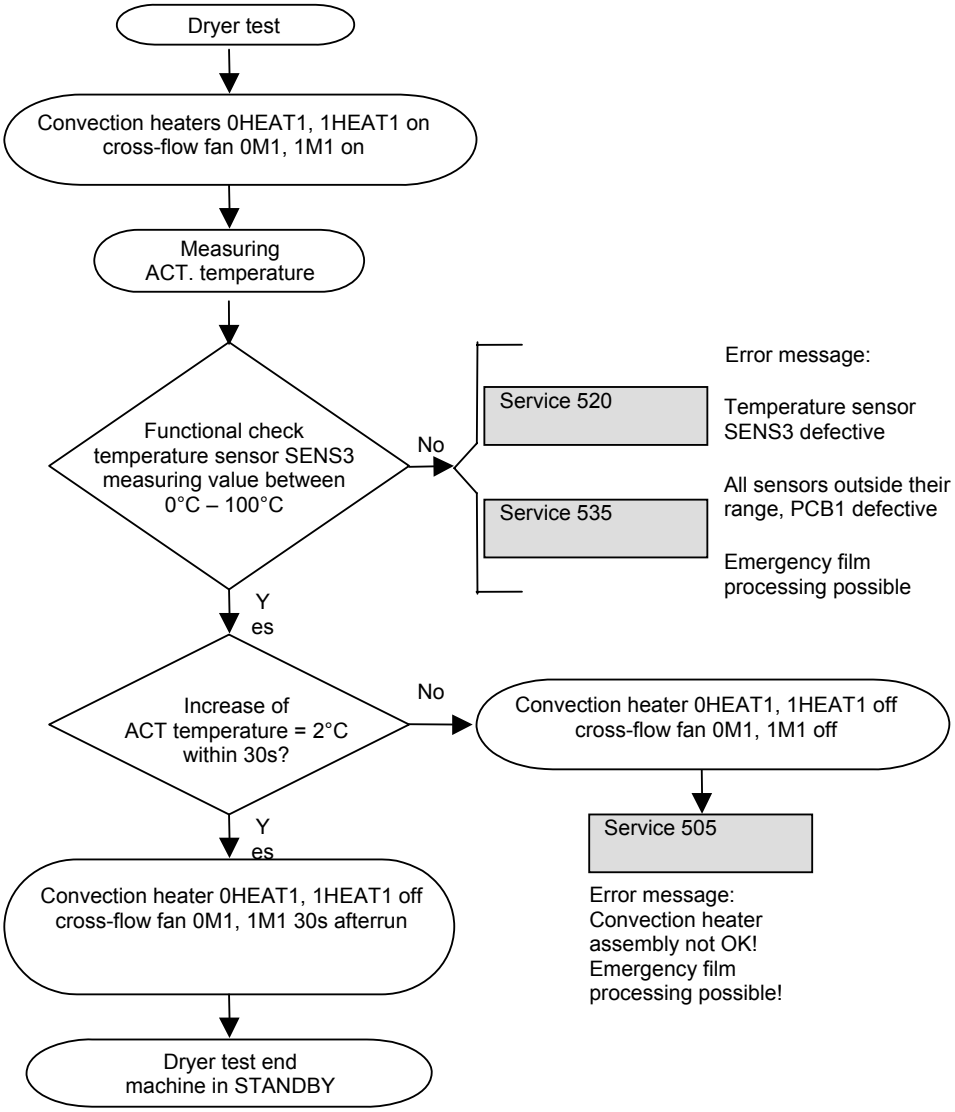

5.8.2 Dryer control during film cycle

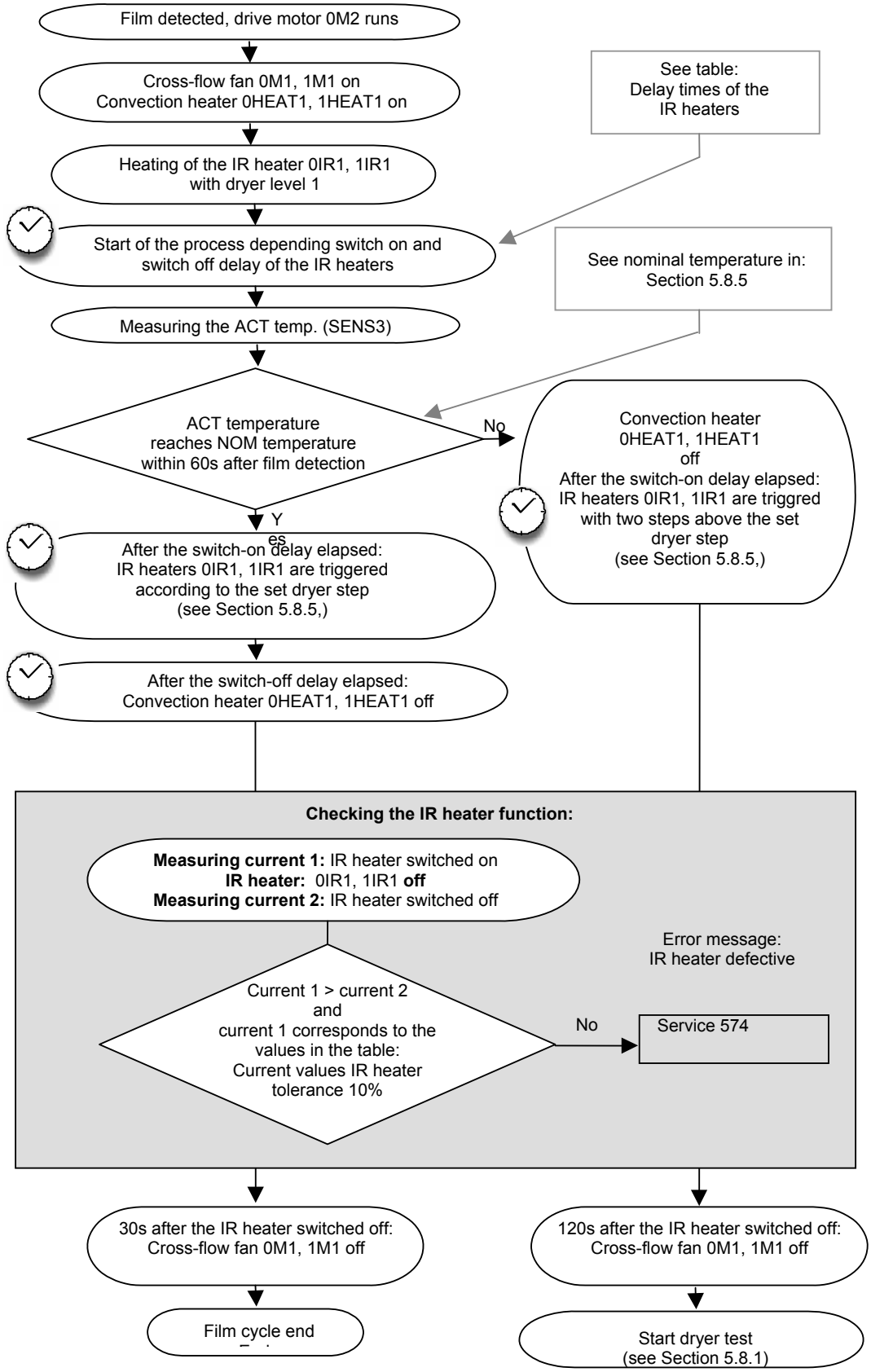

5.8.3 Table: Delay times of the IR-heaters depending on the process

Process:	HT (60s)	IP (90s)	RP (2min)	EXT (3min)
Switch-on delay:	35s	65s	85s	145s
Switch-off delay:	78s	118s	155s	241s

Table: Current values of IR-heaters depending on the dryer steps

Minimum current (A)

Dryer steps:		1	2	3	4	5	6	7	8	9	10
Voltage range:	<210V	0.5	0.9	1.3	1.5	1.7	2.0	2.3	2.6	3.0	3.2
	210-235V	0.6	1.0	1.4	1.7	1.9	2.2	2.6	2.9	3.3	3.6
	>235V	0.7	1.1	1.6	1.9	2.1	2.4	2.9	3.2	3.6	4.0

5.8.4 Error messages of the dryer control

1. An error message

is displayed, if there is no OK signal after three attempts to switch on the cross flow fan. IR-heaters and convection heaters are not switched on. The film will be developed but not dried!

2. An error message

is displayed if the temperature increase in the dryer is less than 2K within 30s.

3. An error message

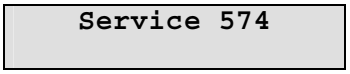

is displayed if the current value of the IR-heater deviates from the expected value by more than 10%.
The expected value is determined by the set dryer step, the process type, and the available mains voltage.

5.8.5 Dryer step setting

- The complete dryer function is influenced by three parameters:
  - available mains voltage,
  - set process type, and
  - selected dryer step.
- We differentiate three mains voltage ranges: below 210V, between 210V and 235V, and above 235V.
- The process types are combined in two groups: 60s/90s (HT/IP) and 2min/3min (RP/EXT).
- The adjustment range of the various dryer steps is the result of defined combinations of the voltage levels for the IR-heaters and temperature steps of the convection heaters.
- There are 13 dryer levels available.

The following tables shows the combination possibilities of the parameter values for 13 possible dryer levels or steps:

Mains voltage < 210V

Process	**HT (60s) / IP (90s)**		**RP (2min) / EXT (3min)**	
Dryer step	IR (V)	NOM temp. (°C)	IR (V)	NOM temp. (°C)
1	0	40	0	35
2	70	40	0	40
3	70	45	70	40
4	100	42	70	42
5	125	40	100	40
6	145	40	125	40
7	145	45	145	40
8	160	40	145	42
9	175	40	160	40
10	190	45	190	45
11	200	45	200	45
12	208	46	208	46
13	230	44	208	40

Mains voltage 210V - 235V (200V)

Process	**HT (60s) / IP (90s)**		**RP (2min) / EXT (3min)**	
Dryer step	IR (V)	NOM temp. (°C)	IR (V)	NOM temp. (°C)
1	0	40	0	35
2	70	40	0	40
3	70	42	70	40
4	100	40	70	42
5	125	40	100	40
6	145	40	125	40
7	145	42	145	40
8	160	40	145	42
9	175	40	160	40
10	190	45	190	45
11	200	45	200	45
12	208	40	208	40
13	230	36	208	40

Mains voltage > 235V

Process	**HT (60s) / IP (90s)**		**RP (2min) / EXT (3min)**	
Dryer step	IR (V)	NOM temp. (°C)	IR (V)	NOM temp. (°C)
1	0	40	0	35
2	70	40	0	40
3	70	42	70	40
4	100	40	70	42
5	125	40	100	40
6	145	40	125	40
7	145	42	145	40
8	160	40	145	42
9	175	40	160	40
10	190	40	190	45
11	200	40	200	40
12	208	36	208	36
13	208	36	208	36

5.9 Transformer

A toroidal core transformer provides the required voltages for the machine. Secondary voltages of 15V, 22V, and 30V are provided for DC consumers. The respective voltages for dryer operation are tapped. Whereby the respective voltage values depend on the applied mains voltage.

5.10 Drive motor

- Once all tank levels have been reached, the drive motor starts at 0.5 m/min during the heating phase.
- The following functions may be set up in the SERVICE program <**Drive on**>:
  "Motor sopped during STANDBY phase"
  or
  "running at 0.5 m/min (DEFAULT setting)"
  during the STANDBY phase.
- The operating speed (film transport) depends on the selected process (HT (60s), IP (90s), RP (2min), EXT (3min)).
- Triggering comes through the Control Board PCB1.
- Switching the process application
  The speed correction is accepted 7 seconds after process switching.

The following table shows the different motor speeds in relation to the selected process:

Process	Number of revolutions
HT (60s)	3353
IP (90s)	2218
RP (2min)	1690
EXT (3min)	1108

An error message

is displayed.

- If the ACT motor speed deviates from the NOM speed by more than 50%, the motor is switched off.
- Standard control accuracy better than 2%.
- If the motor internal supply voltage increases to a higher value than 36V, the motor will be switched off.
  This happens if the mains supply is higher than 250V.

5.11 Temperature measuring

- To measure the temperature, the voltage values on the temperature sensors SENS1 (developer) and SENS2 (fixer) are determined every 100ms.
- The average value of the voltages is determined by 10 measuring cycles. The temperature corresponding to this voltage value is then taken from an internally stored table.
- The temperature is shown with an accuracy of 0.1°C.
- Plausibility check:
  All temperature values below 0°C or above 100°C are considered as non-real temperature values and will be discarded!
  And an error message is generated! (See Chapter 6.3)

5.12 Level detection

LEVEL detection is provided in the machine tanks
developer / fixer 1 / fixer 2 / water tank (dev / fix1 / fix2 / wat)
with one electrode each. When the tank is filled and the solution reaches the electrode a ZERO level is applied at the sensor.
The voltage value at the sensor is checked every 100 ms. An average value is worked out based on 10 measuring cycles.
The LEVEL is reached once the voltage value is approx. 3 V.
For possible error messages refer to Chapter 6.3.

5.13 Current sensor

During a <**Teach In**> the current sensor PCB2 determines the ACT current values of the individual users. These current values are saved a NOM. current values. The current values of the consumers measured during the function are compared to the saved NOM current values and then evaluated. In case of major deviations (see Current value table, Chapter 6.2), error messages will be created which are displayed as Service messages with error numbers.
Error messages see Chapter 6.3

5.14 Power failure

Power failure during film cycle:	Once the mains power comes back a process cycle with dryer function and water supply takes place. Function as in emergency film phase.
Power failure in standby:	Falls back to heating phase → STANDBY

5.15 Data saving

All operation relevant data is saved in the chips IC50, IC51, IC52, and IC53 on the Control Board. Specifically:

Module	Data
EPROMs IC50, IC51	• Machine software
Clock chip IC52	• Status of the replenishment rate calibration • Values of the replenishment rate calibration • Operating hours • Infocounter data • Expiration date of the maintenance interval • Operation relevant data in case of power failure
EEPROM IC53	• All values and settings of the SETUP menu • List of detected problems (error hit list)

6 Roller Diagram

6.1 Classic E.O.S. (Type 5270/100)

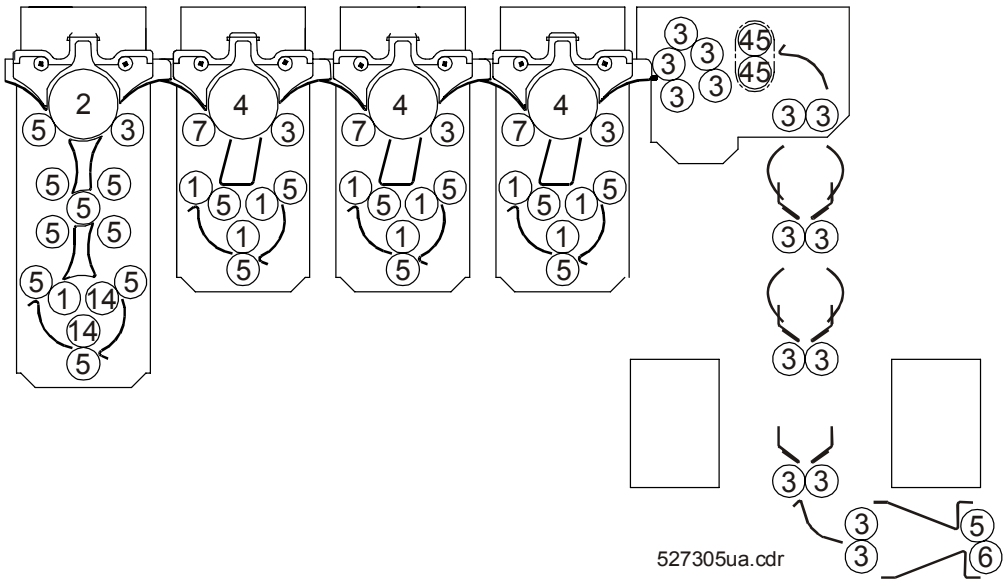

Figure 11

1 Roller gray D=22.5
2 Roller gray D=48
3 Roller gray D=22.5
4 Roller yellow D=48
5 Roller yellow D=22.5
6 Roller red D=22.6
7 Roller yellow D=22.5
14 Roller gray D=22.8
45 Roller gray D=22.5

6.2 Classic E.O.S. CL (Type 5270/105)

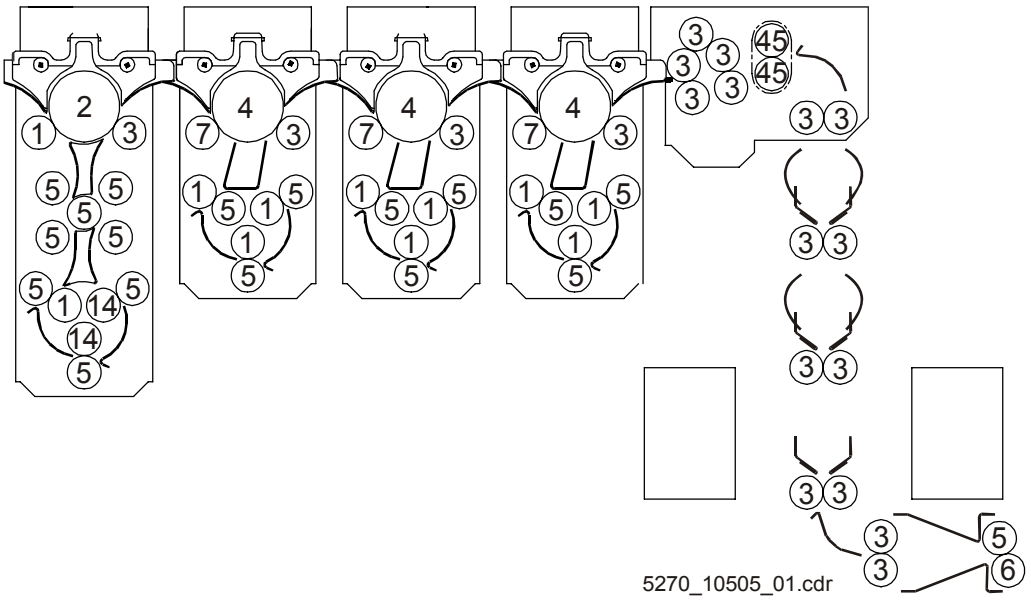

Figure 12

1 Roller gray D=22.5
2 Roller gray D=48
3 Roller gray D=22.5
4 Roller yellow D=48
5 Roller yellow D=22.5
6 Roller red D=22.6
7 Roller yellow D=22.5
14 Roller gray D=22.8
45 Roller gray D=22.5

Repair and Service

6

Section 6

contains detailed information for repair and service.

Exact information of the machine functions (section 5) is the prerequisite for doing repairs and adjustments.

Section 6 is divided into the following chapters:

1 Safety regulations / general hints for repair work

2 Tools and auxiliary means (also software tools)

3 Troubleshooting

4 Electrical and mechanical codes, fuse tables

5 Replacement of parts, including adjustment instructions when applicable

6 Adjustments (software and hardware)

Chapter 6.1

Contents

1 Safety Check 1

1.1 Checking the function of the GFI switch 0FI 3

2 Repair Instructions 4

2.1 Cover switch 4

2.2 Light tightness of the machine 5

2.3 Repairs on circuits 6

2.4 Repairs on printed circuit boards 6

2.5 Replacing the clock chip IC 52 (battery) on the Control Board PCB1 7

2.6 Working on the dryer 8

2.7 Handling of chemicals 8

1 Safety Check

- To check the power supply disconnect the machine from the mains.
- Use the Voltmeter to verify that there is no voltage.

Upon completion of every repair or maintenance the following safety checks are required.

Country-specific regulations must be considered as well.

Visual check

- Make sure that no obstacles, protruding parts, defective housing, or sharp edges are exposed around the machine.

Checking the functions of safety devices

- -Check the function of the cover/door switch.

Tightness check

- Check the hoses and tanks for leaks, inside and outside the machine, on all supply and drain hoses.
- Remove any remainders of water and chemicals. Observe the disposal regulations for chemicals.

Electrical check

- Check the power cable and the cables inside the machine for damage.
- Check the strain relief of the power cable.
- Check the line fuses for the required value.
- Check the function of the air filter and the cooling.
- Check the cable connections and plug for burnt spots.
- Check the grounding connections at the metal panels and housing.

Upon repairs regarding the mains voltage the protective earth must be checked (VDE standard). The resistance of the PE with an earthed pin connector is ≤ 0.3 Ohm, with a fixed connection it is ≤ 0.2 Ohm (according to VDE 0702, VBG4, Edition 1997).

1: Internal circuit of the machine to be tested

2: Measuring equipment for testing the protective earth resistance

3: Connection between meter and protective earth

4: Connection between meter and conductive parts which may be touched in the machine to be checked

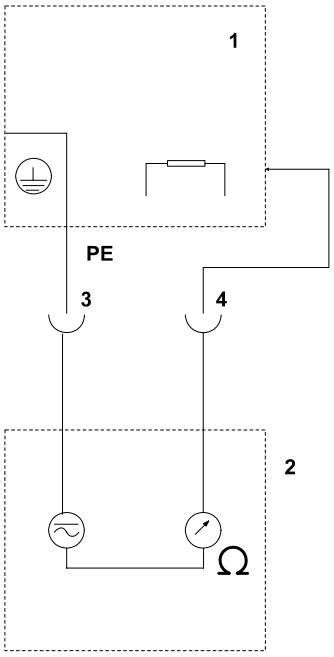

Figure 1

When measuring the resistance consider that the total value always includes the resistance of the measuring cable.

1.1 Checking the function of the GFI switch 0FI

A GFI switch: (I_N = 30 mA in compliance with VDE 664) is integrated in the machine.

Check the function of the ground fault interrupter (GFI switch).

① Press the button, this releases / deactivates the GFI switch!

② Activate the GFI switch by resetting the toggle switch.
(No automatic reset)

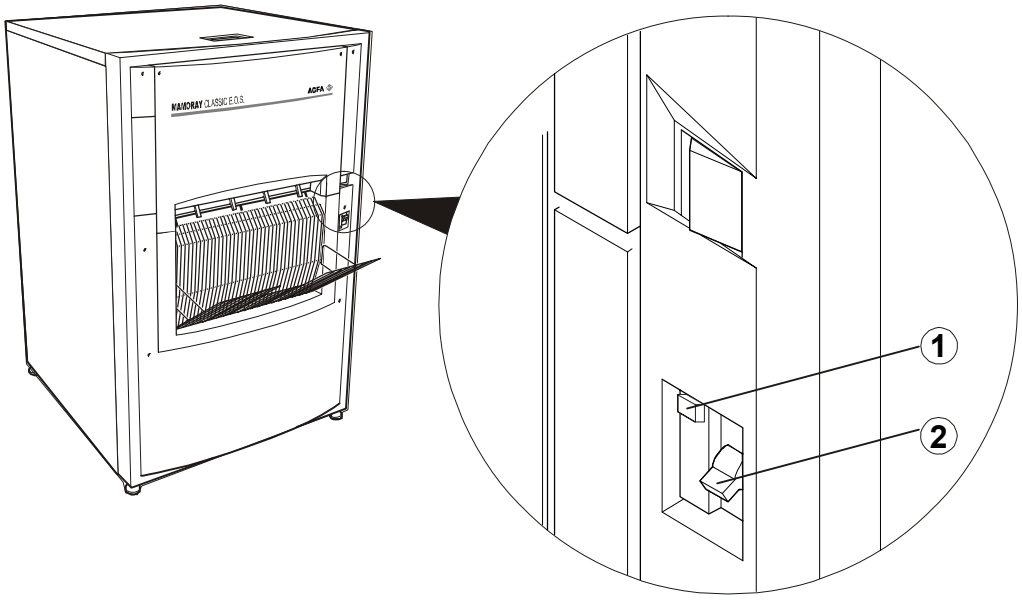

5272_10003_07.cdr

Figure 2

Information for the customer: This routine must be repeated 1x per month.

The machine must not be put in operation without an installed GFI switch!

2 Repair Instructions

2.1 Cover switch

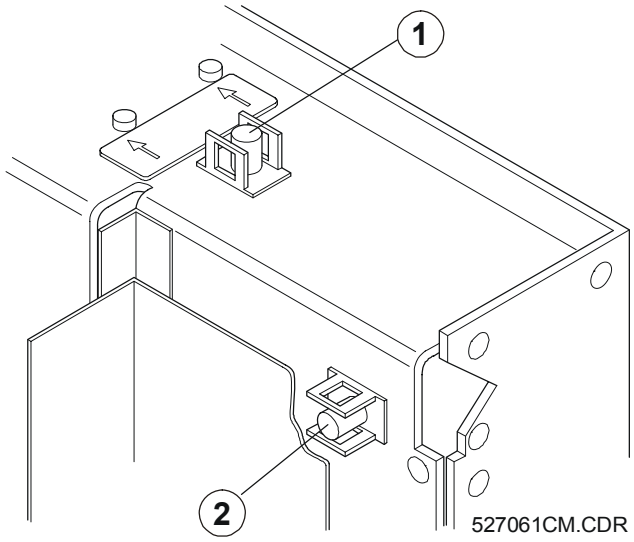

Figure 3

① = Safety switch (cover) 0SW2

② = Safety switch (dryer flap) 0SW3

To ensure safety for the customer the machine has two safety switches (0SW2 and 0SW3).

For service purposes the function of the safety cover switch can be overridden with a service key (locking pin CM+9042663090). However, be careful, there is a risk of injuries by moving mechanical or electrical parts.

Make sure to remove the locking pin before closing the covers.

Otherwise the cover switch may be damaged or the adjustment position is lost. The safety function for the customer is then no longer effective.

But even in case of interrupted safety switches 0SW2 ① and/or 0SW3 ② and with the mains switch 0SW1 off, there is still power applied on the following components as long as the power cord is plugged in:

- Ground fault interrupter 0FI
- Mains switch 0SW1

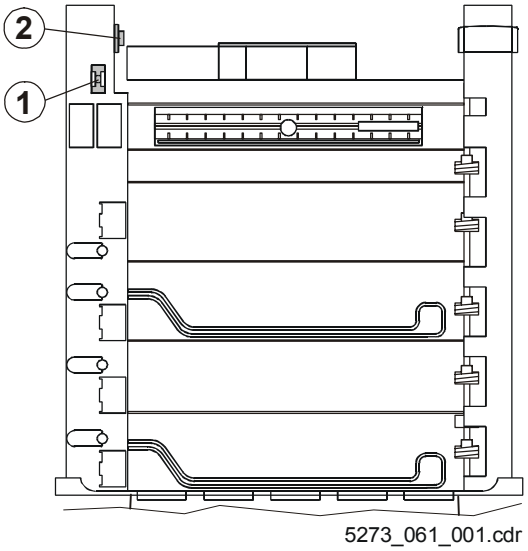

Figure 4

2.2 Light tightness of the machine

The processor must not be installed in an area with direct sunlight (max. 2500 Lux).

The machine must not be opened during the operation.
It is light tight only if all panels are correctly mounted.

For correct removal of panels refer to the illustration below.
Attach the panels and covers in reverse order for light tight connection.

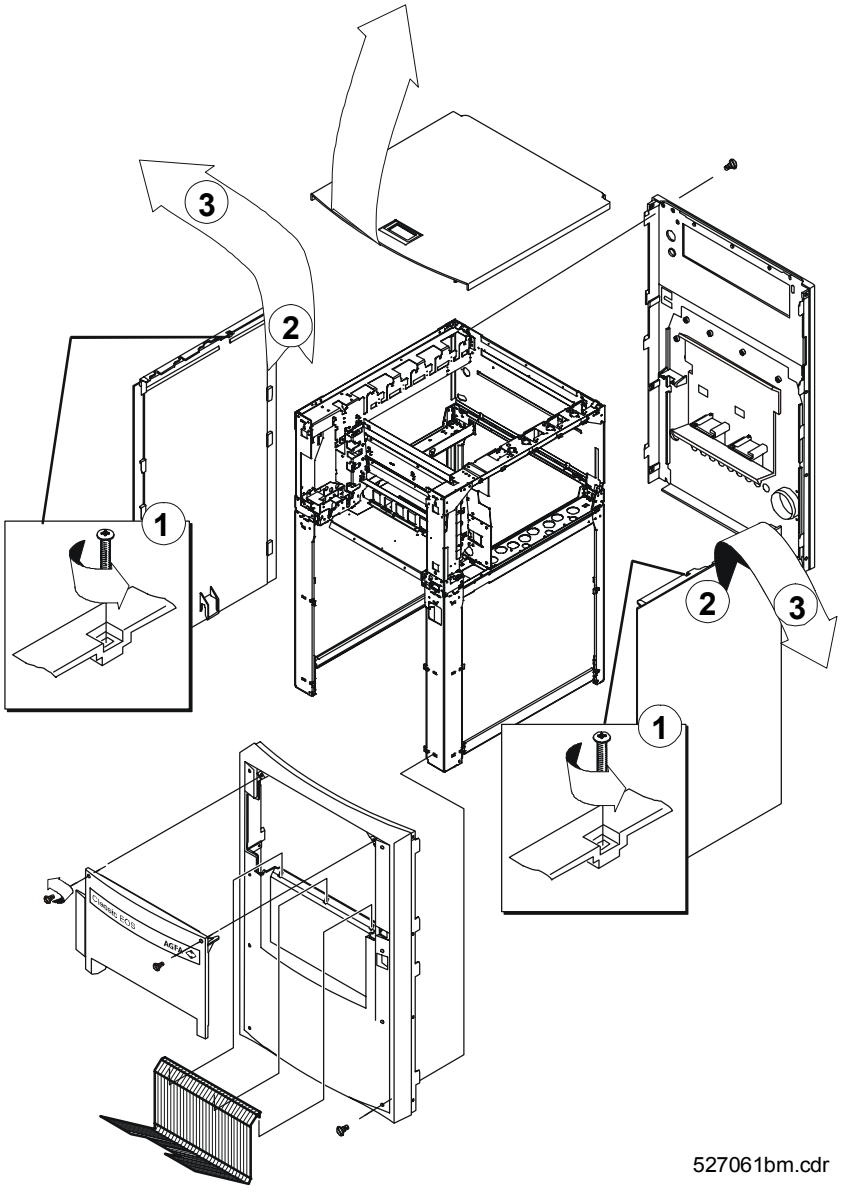

Figure 5

2.3 Repairs on circuits

Wear the grounding wrist strap to discharge any electrostatic charges (order no. 9.9999 0830.0).

If there is no grounding strap available, possible electrostatic charges may also be discharged by touching a metal cover part or the PE.

2.4 Repairs on printed circuit boards

- Make sure to unplug the power cable before disconnecting or connecting any plugs on the printed circuit boards (PCB).
- Never expose PCBs to direct sunlight.
- Observe the general precautions for electrostatic discharges when handling PCBs and other internal components.
- Only keep PCBs in their protective bags.
- If you must take a PCB out of its bag, place it on a conductive mat to protect it from static electricity.
- Never touch the pins of an IC with bare fingers.
- If it is necessary to touch an IC or another electronic component on a PCB make sure to be grounded by wearing a grounding wrist strap.
- Right after the removal the electronic component should be placed in the provided protection bag. Never walk with an unprotected PCB across carpet or plastic floor covering.
- Touch PCBs only at the corners. Never touch the pins or conductive parts of an IC with bare fingers.
- Do not use a multimeter to check an IC directly. It is better to check the connection on the respective PCBs.
- Avoid short circuits at the pins of an IC caused by metal tools.

2.5 Replacing the clock chip IC 52 (battery) on the Control Board PCB1

Risk of explosion in case of incorrect disposal of the clock chip!

- All data in the temporary infocounter is lost upon replacement of the clock chip IC52.
- Observe the correct procedure for the replacement of the clock chip IC 52 (observe the circular mark on the clock chip).

For a detailed description for the replacement procedure of the clock chip IC 52 refer to Chapter 6.5.

- Dispose of a used clock chip in compliance with the regulations by the manufacturer or the local authorities.

Position of clock chip IC 52 on the Control Board PCB1:
PCB1: CM+952709450_ (F8.5270.7890._)

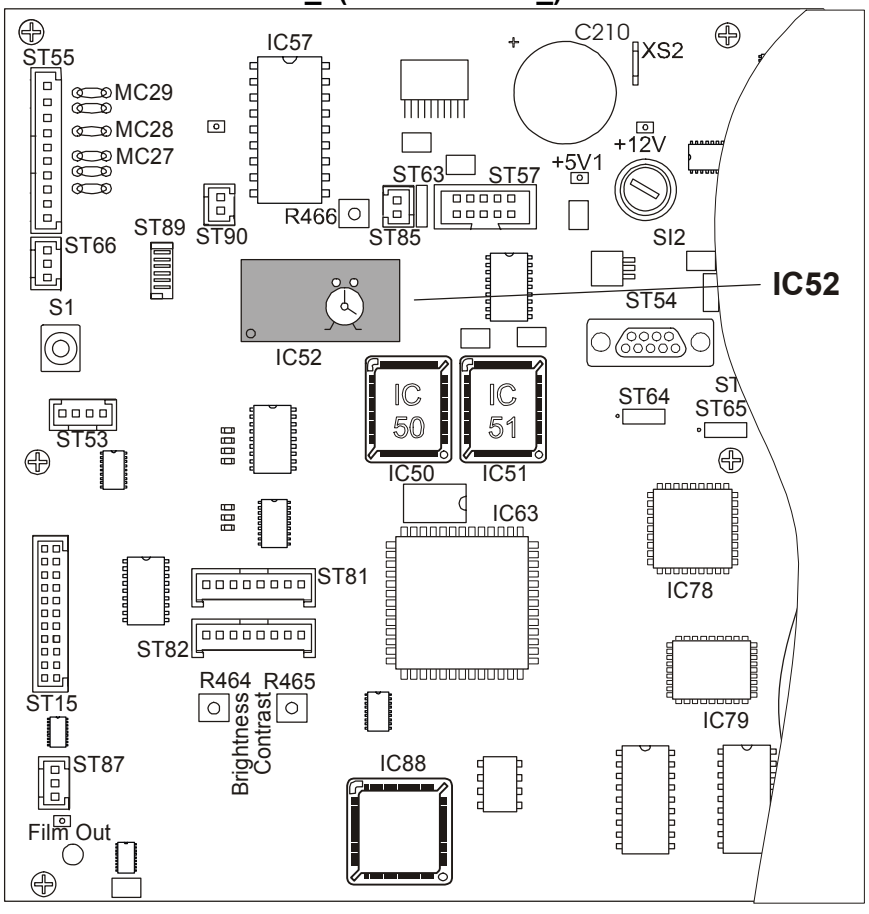

5273_061_002.cdr

Figure 6

2.6 Working on the dryer

There is a risk of burning injuries during and shortly after film processing!

2.7 Handling of chemicals

- Observe the respective safety regulations!
- Wear goggles (risk of splashing).
  If in spite of these precautions chemicals get into your eyes, rinse your eyes immediately with pure water.
  Afterwards see a doctor.
- Avoid the breathing of chemical fumes. Provide for sufficient ventilation at the installation site (see Chapter 1).

Chapter 6.2

Contents

1 Recommended Tools and Test Equipment 1

2 Resetting Customer-Specific Settings (BASEINIT) 2

2.1 Range of application 2

2.2 Function 2

2.3 Initiate a BASEINIT: 2

2.3.1 SERVICE program 3
2.3.2 Manual routine 3
2.3.3 Automatic routine 3

3 Resetting Counters and Lists (Infocounters) 4

3.1 Resetting the temporary infocounters 4

3.2 Resetting the logbook, error lists, and temporary infocounters 5

3.3 Resetting the operation time counter, logbooks, errors lists, and infocounters 5

3.3.1 Range of application 5
3.3.2 Function and activation 5

4 TEACH IN 7

4.1 Error messages 9

4.2 Table of current values 10

1 Recommended Tools and Test Equipment

In addition to the general tools, every service technician has in his tool box, the following equipment is required for the service:

Auxiliary equipment	Spare part no.	Application
Extraction tool for ICs in PLCC housings	CM+9999910050	Replacement of EPROMs
Grounding strap	CM+9999908300	Replacement of PCBs and EPROMs
Measuring glass (graduated beaker), capacity 1000 ml (33.82 fl.oz.)	---	Adjustment of basic replenishment rate for developer / fixer
Locking pin (service key)	CM+9042663090	To override 2 safety switches (cover and dryer flap) (order 2 keys)
Removal tool	CM+9999907930	Removal of the AMP plug contacts
Thermometer Range: -10 to +60°C Scaling: 1°C, Reading Accuracy: 0.5°C	CM+9999902910	Temperature sensor calibration and temperature measuring of the developer and fixer solutions.

2 Resetting Customer-Specific Settings (BASEINIT)

2.1 Range of application

Only execute a BASEINIT in case of:

- Software change
- Inexplicable functional problems

2.2 Function

With a BASEINIT all standard process data is loaded from the EPROM (IC 50/51) into the EEPROM. All customer-specific settings in the EEPROM are overwritten and must be entered again via the SERVICE program **<Service Settings>**.

DEFAULT settings after a BASEINIT see Chapter 3.

Exception:
The following settings are only overwritten if an exceeded limit value is detected during the plausibility check.

Settings	Limit values during plausibility check
Replenisher pump capacity	< 150ml/min or > 1.5l/min (< 5.07fl.oz./min or > 50.73fl.oz./min)
Display language	not defined
Process application	other than CURIX, MAMMO, FUJI Standalone, FUJI IF Docking, LR3300
Calibration of the developer temperature	> +/- 1°C

Furthermore the temporary infocounters will be deleted.
If the system detects an invalid process application, temporary and non-temporary infocounters are deleted.

2.3 Initiate a BASEINIT:

There are three possibilities to trigger a BASEINIT:

- via the SERVICE program
- manually
- automatically

2.3.1 SERVICE program

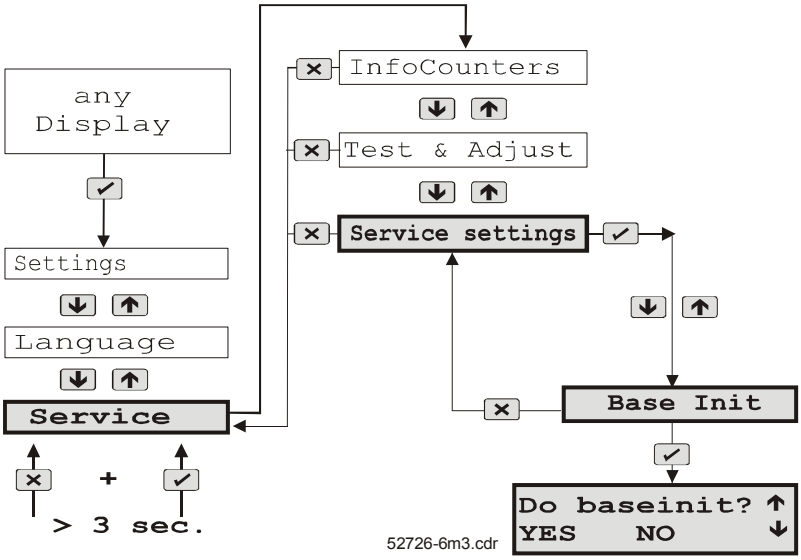

Figure 1

Action	Keys	Display text
Select the “Base Init” dialog window.	↓ ↑	Base Init
Confirm the input.	✓	Do baseinit? YES NO
Select YES to execute a BASEINIT.	↓ ↑	YES
Confirm the input.	✓	
		Ready RP 34.2°C

2.3.2 Manual routine

The machine is switched off. Press the ▼ key and hold it, switch on the machine, wait until the status indication comes up on the display. Depending on the set process and the current developer temperature the following status is displayed:

```
RP     24.9°C
```

BASEINIT has been completed.

2.3.3 Automatic routine

The machine initiates an automatic BASEINIT if a different software version number than the one stored in the EEPROM is detected in the EPROM (IC50/51) during the initialization.

3 Resetting Counters and Lists (Infocounters)

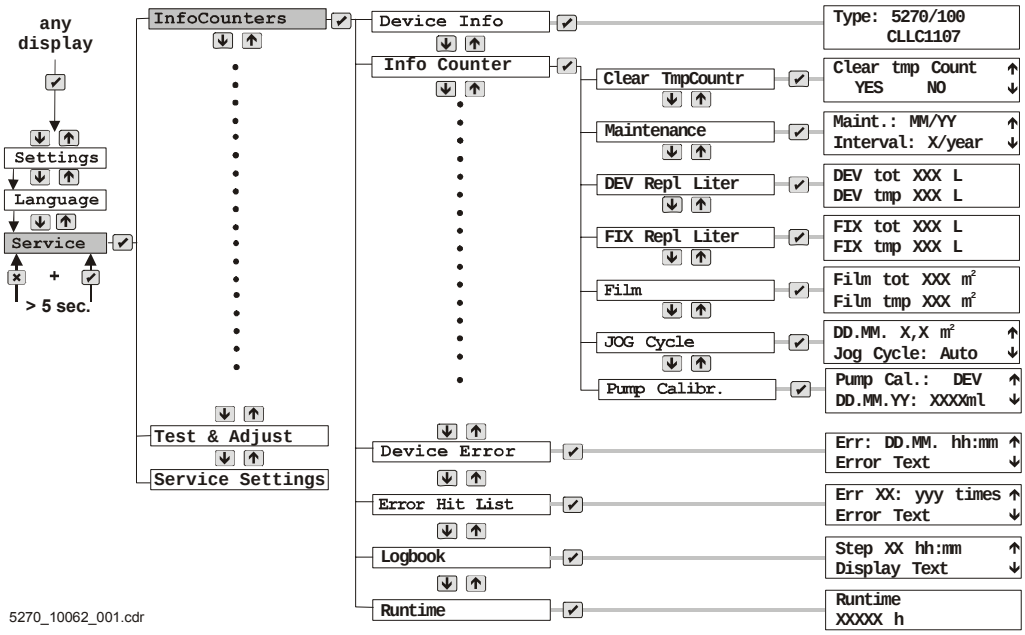

5270_10062_001.cdr

3.1 Resetting the temporary infocounters

Execution of the function **<Clear tmp Count>** in the service program:

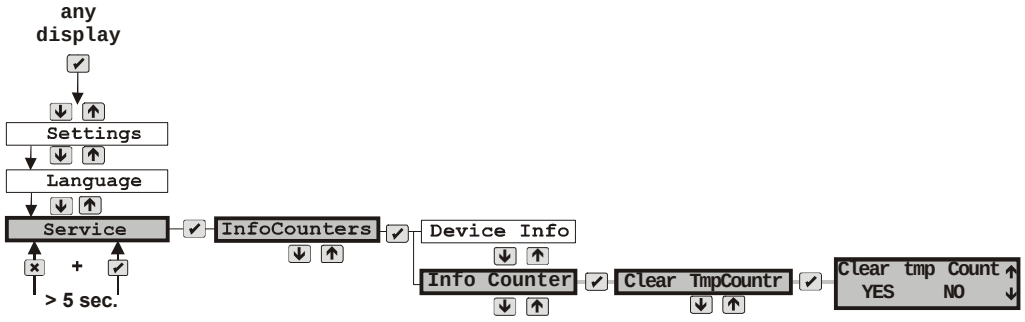

5270_10062_002.cdr

deletes the following temporary infocounters:

- **DEV tmp XXX L**
  Developer replenishment since last maintenance
- **FIX tmp XXX L**
  Fixer replenishment since last maintenance
- **Film tmp XXX m²**
  Processed film since last maintenance

3.2 Resetting the logbook, error lists, and temporary infocounters

Execution of the function **<Clear All Count?>** upon exit from the service program

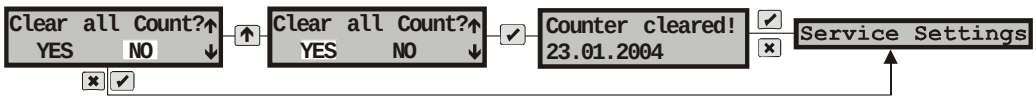

5270_10062_003.cdr

resets the following temporary infocounters and lists:

- **DEV tmp XXX L**
  Developer replenishment since last maintenance
- **FIX tmp XXX L**
  Fixer replenishment since last maintenance
- **Film tmp XXX m²**
  Processed film since last maintenance
- **Device Error**
  The last 100 errors (maximum) with date and time
- **Error Hit List**
  The previously occurred errors according to occurrence frequency with error number and list position
- **Logbook**
  Machine actions with plaintext and time

3.3 Resetting the operation time counter, logbooks, errors lists, and infocounters

3.3.1 Range of application

Execute only in case of:

- Replacement of the clock chip
- Replacement of Control Board PCB1 (GS1)

3.3.2 Function and activation

This deletion function resets or deletes all operation time counters, all entries in the logbook, the error lists, and the infocounters.

Therefore it also deletes the values for maintenance (date and intervals) as well as the calibration of the pumps. After execution of this deletion function, the maintenance indicator in the service program **<Service Settings>/<maintenance>** must be set again, and the pumps must be recalibrated in the service program **<Test & Adjust>**.

Setup of maintenance intervals and pump calibration see Chapter 3.

The deletion function, which is activated by pressing the two arrow keys simultaneously and switching on the machine, resets the following infocounters, lists, and operation time counters:

- **Maint.: MM/YY**
  Interval: X/Year
  Date of last maintenance and maintenance interval
- **DEV tot XXX L**
  DEV tmp XXX L
  Replenishment of developer, total and since last maintenance
- **FIX tot XXX L**
  FIX tmp XXX L
  Replenishment of fixer, total and since last maintenance
- **Film tot XXX L**
  Film tmp XXX L
  Processed film, total and since last maintenance
- **Pump Cal.: DEV**
  DD.MM.YY: XXXXml
  Date of developer replenishment rate calibration with adjusted calibration rate
- **Pump Cal.: FIX**
  DD.MM.YY: XXXXml
  Date of fixer replenishment rate calibration with adjusted calibration rate
- **Device Error**
  The last 100 errors (maximum) with date and time
- **Error Hit List**
  The previously occurred errors according to occurrence frequency with error number and list position
- **Logbook**
  Machine actions after switching on with plaintext and time
- **Runtime**
  Operating hours of the machine

4 TEACH IN

Measuring the current of all consumers for the automatic error diagnosis

Current measuring of the consumers is only possible as of software version **CEOS 1714** and with integrated current sensor.

By means of this function the current values of the individual consumers in relation to the applied mains voltage are measured and saved. The measured current value is then used as reference for the automatic diagnosis function.

A **<Teach In>** must be made after replacement of a consumer.

The **<Teach In>** procedure must be completed to be able to exit the **<Teach In>** dialog.

The current is measured via the Current Sensor Board PCB2.

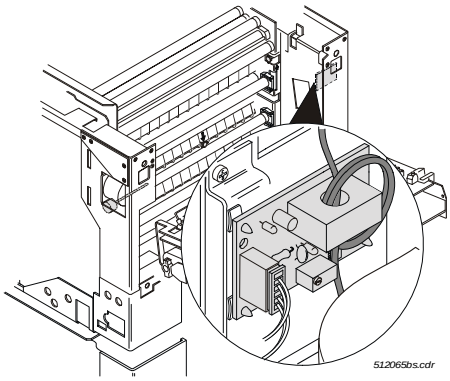

Figure 2

- Call up the menu option **<Teach In>**:

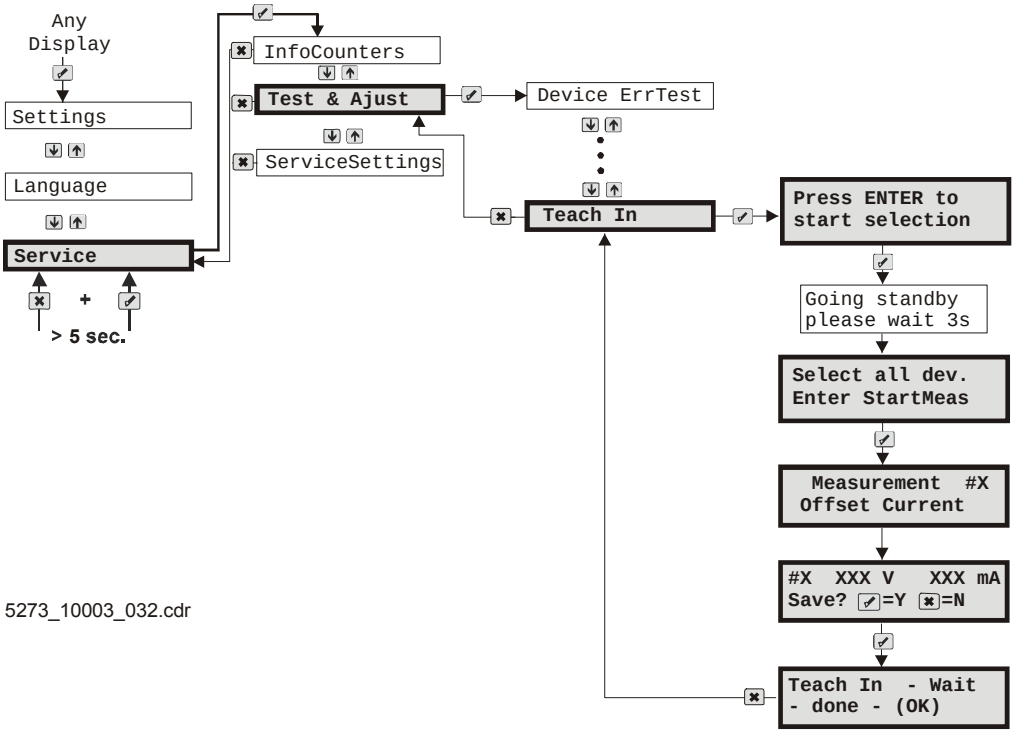

Figure 3

#x = number of the consumer
XXX V = voltage
XXX mA = measured current
=Y = yes
=N = no (new value not yet saved, old value is kept)

- **<Teach In>** procedure:

Action	Keys	Display text
Select the dialog window **<Teach In>**	✔	**Press ENTER to start selection**
	✔	**Going standby please wait 3s**
All consumers are switched off.		**Select all dev. Enter StartMeas**
The supply voltages of the machine and the currents of the consumers are measured.	✔	**Measurement #X Offset Current**
The first measurement is carried out and then the result is displayed.		**#X: XXX V XXX mA Save ? √=Y x=N**
Save the measurement.	✔	**#X: XXX V XXX mA**
The next measurement is carried out. If there are no errors, current and voltage are stored in the EEPROM after ENTER.		
Once all consumers have been measured and the results saved, the following message is displayed:		**Teach in - WAIT -done- (OK)**
Exit the function.	✘	

4.1 Error messages

In the following cases a warning is displayed during the **<Teach In>**:

- The measured current value is outside the given range of values:

```
#xx WARN: aaaamA
Range=bbbb-cccc!
```

xx = number of the consumer
aaaa = measured current
bbbb = minimum permissible value
cccc = maximum permissible value

- If the current value is measured within the given maximum measuring time, the measurement will also be aborted with an error message:

```
#xx TO:yyyy-zzzz
ccccms >aa%/bbbb
```

xx = number of the consumer
yyyy = last current value
zzzz = actual current value
cccc = maximum measuring time
aa = max. difference of two current values in percentage
bbbb = difference of two current values, absolute value

4.2 Table of current values

Consumer	max. diff.	Current value		Delay time	Max. meas. time
		min.	max.		
Offset current	20%	0	0	4s	5s
Solenoid valve water drain	20%	10mA	200mA	1s	5s
Water supply solenoid valve	10%	10mA	200mA	1s	5s
Circulation pumps	10%	100mA	400mA	0	5s
Developer replenisher pump	10%	50mA	200mA	0	5s
Fixer replenisher pump	10%	50mA	200mA	0	5s
Dryer fan	10%	400mA	800mA	2s	5s
Exhaust fan low capacity	10%	20mA	200mA	10s	10s
Exhaust fan high capacity	10%	50mA	200mA	10s	20s
IR heater level 1	10%	800mA	1.5A	1s	10s
IR heater level 2	10%	1A	2A	1s	10s
IR heater level 3	10%	1.3A	2A	1s	10s
IR heater level 4	10%	1.7A	2.5A	1s	10s
IR heater level 5	10%	2A	3A	1s	10s
IR heater level 6	10%	2.2A	3.2A	1s	10s
IR heater level 7	10%	2.5A	3.4A	1s	10s
IR heater level 8	10%	2.8A	4A	1s	10s
IR heater level 9	10%	3.3A	4.2A	1s	10s
IR heater level 10	10%	3.5A	5A	1s	10s
Dryer convection heater	10%	6A	10A	0	5s
Heater developer	10%	2A	4.5A	0	5s
Heater fixer	10%	2A	4.5A	0	5s
Motor (standby)	-	5mA	400mA	1s	5s

Chapter 6.3

Contents

1 Operation Display 1

1.1 Status displays 1

1.2 Displays during heating and filling phase 1

2 Error Messages on the Display 4

2.1 Error messages in plaintext 4

2.2 Error display with Service numbers 7

3 Errors without Indication on the Display 13

3.1 Error indication on the synchro-motor 13

3.2 Solution heaters are not switched on 14

3.3 Faulty dryer triggering after replacement of Control Board PCB1 14

4 Internal Error Diagnosis 15

4.1 Flow chart 16

4.2 Error list for internal error diagnosis 17

4.3 Activating the internal error diagnosis via the menu `<Test & Adjust>` 18

4.3.1 <Device ErrTest> Menu 18

4.3.2 <Autotest> Menu 19

4.4 Repair instructions after activating an internal error diagnosis 19

1 Operation Display

The following messages are displayed during normal operation without any problems:

1.1 Status displays

Display	Cause and remedies
	Display if the machine is NOT ready
`RP XX.X°C`	• Machine is in heating and filling phase • Machine is in error status • ACT. display PROCESS • ACT. display developer temperature
	•
	Machine is in STANDBY
`Ready` `RP 34.0°C`	• NOMINAL developer temperature has been reached • Machine is ready for film feed
	Machine is in film process
`Please wait`	• Film is in the film feed area / film area scanner

1.2 Displays during heating and filling phase

The following STATUS messages are displayed alternately with the above mentioned display for “NOT ready”:

Display	Cause and remedies
`Adding` `developer`	• The developer tank level is too low • Switch-on replenishment ON • Jog-cycle replenishment ON
`Adding` `fixer`	• The fixer tank level is too low • Switch-on replenishment ON • Jog-cycle replenishment ON

Display	Cause and remedies
`Adding water`	• The water tank level is too low
`Heating developer`	• The developer tank temperature is too low, the developer is heated

Error:	The display alternates between: `<Heating developer>` and `<Please wait>`, it does not change to `<Ready>.`
Cause:	• The tank system is leaking. • Impeller of the circulation pump runs irregularly because of dirt or damage. • Drive motor of the developer circulation pump defective.
Remedy:	• Check the anti-algae solenoid valve and the O-ring and replace if necessary. Check the tank shut-off valve. • Clean the impeller or replace. • Replace the circulation pump drive motor.

`Cooling developer` This message only occurs if developer temperature or process have been changed.	• The developer tank temperature is too high. • The developer heater remains off until the temperature is 0.1°C below NOM. temperature. • Fill cold developer of the replenisher tank carefully into the developer machine tank, until ACT. temperature < NOM temperature.
`Heating fixer`	• The fixer tank temperature is too low. • The fixer is heated.
`Emergency film Please wait`	• Emergency film processing: Emergency film is fed via the film feed.

Display	Cause and remedies
Maintenance **Please wait** (alternating with the display **<FILM>** during the first 3 films always after switching on)	• The set maintenance interval has elapsed. • For setup see Chapter 6.6 Program **<Service Settings>** → **<Maintenance>** → **<ServiceInterval>**

2 Error Messages on the Display

Switch off the acoustic alarm by pressing the confirmation key ✔

2.1 Error messages in plaintext

Emergency film processing is possible in case of the errors listed below. Exception for emergency film processing: low level in developer, fixer, and water and the message Service 506.
The following display texts are alternately displayed with the “NOT ready” display:

Display	Cause and remedies
MUST calibration in case of first operation:	
`Cal Dev and Fix goto Test/Adjust`	• The replenishment rates for developer and fixer have not yet been calibrated. • Execute the calibration (see Chapter 3, Section 9.7)
`Cal Dev Pump goto Test/Adjust`	• The replenishment rate for developer has not yet been calibrated. • Execute the calibration (see Chapter 3, Section 9.7)
`Cal Fix Pump goto Test/Adjust`	• The replenishment rate for fixer has not yet been calibrated. • Execute the calibration (see Chapter 3, Section 9.7)
Level check:	
`Check EOS module`	• Coding active although there is no EOS module connected. • Set **<Service Settings>** → **<EOS Wash/FIX conn.?>** on **<NO>**.
`Check mixer`	• Coding activated although there is no Mixer communication connected (see Chapter 3). • Set **<Service Settings>** → **<Mixer conn?>** on **<NO>**.

Display	Cause and remedies
Check external developer	• Coding activated although there is no external fixer tank connected (see Chapter 3). • The external developer replenisher tank is empty. • Set **<Service Settings>** → **<Dev Repltnk conn.?>** on **<NO>**. • Fill the developer replenisher tank.
Check external fixer	• Coding activated although there is no external fixer tank connected (see Chapter 3). • The external fixer replenisher tank is empty. • Set **<Service Settings>** → **<Fix Repltnk conn.?>** on **<NO>**. • Fill the fixer tank.
Check waste tank	• Developer and/or fixer disposal tanks are full. • The replenishment is immediately interrupted! • Drain the tank.
Check anti-algae	• Coding activated although there is no anti-algae unit connected. • Set **<Service Settings>** → **<Algezid Supp Cond>** on **<NO>**.
Check water pump Corresponds to **<SERVICE 515>**	• Failure of water tank circulation (option); synchro-motor 0M4 defective (see Chapter 6.3, Section 3) • Impeller fails to turn; clean the water pump! • Control Board PCB1 defective.
Developer level low Corresponds to **<SERVICE 507>**	• Developer tank level too low. • No developer replenisher in the tank or in the mixer. • Replenisher pump 2M1 (2M3) defective. • Check mixer and supply lines. • Check plug ST67 on the Control Board PCB1. • Level sensor LEV_1 defective. • Control Board PCB1 defective.

Display	Cause and remedies
Fixer level low Corresponds to **<SERVICE 508>**	• Fixer tank level too low. • No developer replenisher in the tank or mixer. • Replenisher pump 2M2 (2M4) defective. • Check mixer and supply lines. • Check plug ST68 and ST76 on the Control Board PCB1. • Level sensor LEV_2 or LEV_3 defective. • Control Board PCB1 defective.
Water level low Corresponds to **<SERVICE 507>**	• Level in the water tank too low. • Water supply filter is clogged! • Check water tap and supply lines. • Check plug ST69 on the Control Board PCB1. • Solenoid valve for water supply 2MG1 defective. • Level sensor LEV_4 defective. • Control Board PCB1 defective.

2.2 Error display with Service numbers

Switch off the acoustic alarm by pressing the ✔ key.

Emergency film processing is possible in case of the errors listed below.
Exception for emergency film processing: low level in developer, fixer, and water and the message Service 506.
The following display texts are alternately displayed with the “NOT ready” display:

Display	Cause and remedies
SERVICE 501	• Developer temperature too high > 1 °C above NOM. value. • Ambient temperature too high. • Temperature sensor SENS1 defective. • Control Board PCB1 defective.
SERVICE 502	• Developer temperature too low > 1 °C below NOM value, or temperature increase within 4 min. < 1 K. • Thermal cutout 0BE1 developer heater was triggered. • Check fuse SI 6. • Developer heater 0HEAT3 defective (checking in **<TEACH IN>** is possible). • Control Board PCB1 defective.
SERVICE 503	• Fixer temperature too high (> 40 °C). • Ambient temperature too high. • Temperature sensor SENS2 defective. • Control Board PCB1 defective.
SERVICE 504	• Fixer temperature too low (< 28 °C) • and/or temperature increase within 4 min < 1 K. • Thermal cutout 0BE2 fixer heater was triggered. • Check fuse SI 7. • Fixer heater 0HEAT2 defective (checking in **<TEACH IN>** is possible). • Control Board PCB1 defective.

Display	Cause and remedies
SERVICE 505	• Dryer temperature increase within 30 sec < 2 K. • Check fuse SI 3. • Dryer convection heater 0HEAT1 / 1HEAT1 defective (checking in **<TEACH IN>** is possible). • Temperature sensor SENS3 defective. • Thermal cutout 0Si_HEAT1 or 1Si_HEAT1 convection heater (on the cross-flow fan) was triggered or is defective. • Control Board PCB1 defective.
SERVICE 506	• Speed deviation of the drive motor > 50 %. • Main drive motor 0M2 0HEAT2 defective (checking in **<TEACH IN>** is possible). • Drive of racks / dryer sluggishness. • Control Board PCB1 defective (power supply).
SERVICE 507 Corresponds to **<Developer level low>**	• Developer tank level too low. • No developer replenisher in the tank or in the mixer. • Replenisher pump 2M1 (2M3) defective. • Check mixer and supply lines. • Check plug ST67 on the Control Board PCB1. • Level sensor LEV_1 defective. • Control Board PCB1 defective.
SERVICE 508 Corresponds to **<Fixer level low>**	• Fixer tank level too low. • No fixer replenisher in the tank or mixer. • Replenisher pump 2M2 (2M4) defective. • Check mixer and supply lines. • Check plug ST68 and ST76 on the Control Board PCB1. • Level sensor LEV_2 or LEV_3 defective. • Control Board PCB1 defective.

Display	Cause and remedies
SERVICE 509 Corresponds to **<Water level low>**	• Level in the water tank too low. • Water supply filter is clogged! • Check water tap and supply lines. • Check plug ST69 on the Control Board PCB1. • Solenoid valve for water supply 2MG1 defective. • Level sensor LEV_4 defective. • Control Board PCB1 defective.
SERVICE 514	• Developer / Fix1 / Fix2 circulation not working. • Synchro-motor 0M5 / 0M6 / 0M7 defective (see also Chapter 6.3, Section 3). • Impeller fails to turn. • Control Board PCB1 defective.
SERVICE 515 Corresponds to **<Check water pump>**	• Failure of water tank circulation (option); synchro-motor 0M4 defective (see Chapter 6.3, Section 3) • Impeller fails to turn; clean the water pump! • Control Board PCB1 defective.
SERVICE 518	• Developer temperature sensor SENS1 defective. • Check plug ST75 on the Control Board PCB1. • Check / replace the developer temperature sensor SENS1.
SERVICE 519	• Fixer temperature sensor SENS2 defective. • Check plug ST78 on the Control Board PCB1. • Check / replace the fixer temperature sensor SENS2.
SERVICE 520	• Dryer temperature sensor SENS3 defective. • Check plug ST77 on the Control Board PCB1. • Check / replace the dryer temperature sensor SENS3.

Display	Cause and remedies
SERVICE 535	• Control Board PCB1 defective **Prior to the replacement of Control Board PCB1 check the Current Sensor Board PCB2:** • Execute a **<TEACH In>** and compare the measured current values with the reference table (see Chapter 6.2, Section 3). • If the **<TEACH IN>** does not produce any plausible values, the Current Sensor Board PCB2 is defective.
SERVICE 536	• Heater in developer or fixer tank cannot be switched off anymore. • Control Board PCB1 defective.
SERVICE 539	• 24 V supply failed. • SI9 on Control Board PCB1 defective. • Control Board PCB1 defective.
SERVICE 549	• Current Sensor Board PCB2 defective. • Check the Current Sensor Board PCB2: Execute a **<TEACH In>** and compare the measured current values with the reference table (see Chapter 6.2, Section 3). • If the **<TEACH IN>** does not produce any plausible values, the Current Sensor Board PCB2 is defective.
SERVICE 550	• Main drive motor 0M2 defective (checking in **<TEACH IN>** is possible).
SERVICE 555	Synchro-motor monitoring of the fixer 1 circulation pump: • Synchro-motor 0M6 defective • Pump impeller blockage
SERVICE 556	Synchro-motor monitoring of the fixer 2 circulation pump: • Synchro-motor 0M5 defective • Pump impeller blockage

Display	Cause and remedies
SERVICE 557	Synchro-motor monitoring of the developer circulation pump: • Synchro-motor 0M7 defective • Pump impeller blockage
SERVICE 558	Synchro-motor monitoring of the water circulation pump (option): • Synchro-motor 0M4 defective • Pump impeller blockage
SERVICE 559	• Power supply for synchro-motor of the circulation pumps interrupted • Check supply cables (checking in **<TEACH IN>** is possible).
SERVICE 562	• Check fuse SI 1. • Fixer replenisher pump 2M2 defective (checking in **<TEACH IN>** is possible).
SERVICE 563	• Check fuse SI 1. • Developer replenisher pump 2M1 defective (checking in **<TEACH IN>** is possible).
SERVICE 574	• Problem in the infrared heater • Thermal 0Si_IR1-out BE2 has reacted • Check fuse SI 5. • Dryer motor 0M1 or 1M1 defective (checking in **<TEACH IN>** is possible). • Control Board PCB1 defective.
SERVICE 575	• Problem at the dryer cross-flow fan • Check SI 1. • Check socket 6 (motor 0M1 / 1M1). • Dryer motor 0M1 or 1M1 defective (checking in **<TEACH IN>** is possible). • Control Board PCB1 defective.
SERVICE 579	• Exhaust fan motor 1M2 defective (checking in **<TEACH IN>** is possible). • Control Board PCB1 defective.

Display	Cause and remedies
SERVICE 580	• Solenoid valve for water supply 2MG1 defective (checking in **<TEACH IN>** is possible). • Control Board PCB1 defective.
SERVICE 582	• Solenoid valve for water drain 2MG2 defective (check in **<TEACH IN>** is possible). • Control Board PCB1 defective.

3 Errors without Indication on the Display

3.1 Error indication on the synchro-motor

The function can be checked at LED (2) on the synchro-motor of the circulation:

LED ON	Synchro-motor (1) OK	
LED OFF	ERROR	• Synchro-motor (1) defective • 24 V power supply missing • Impeller (5) in pump (4) blocks

1: Synchro-motor
2: Fault display
3: Position of the assembly within the housing
4: Pump housing
5: Impeller

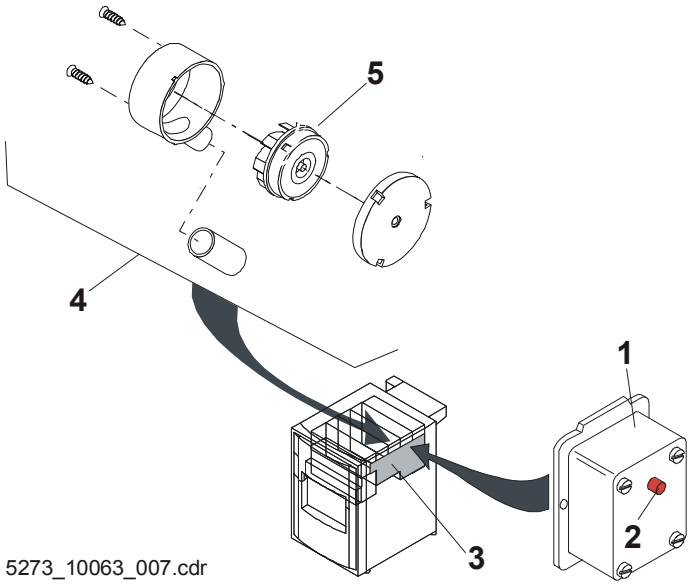

Figure 1

3.2 Solution heaters are not switched on

Error:	Although the levels seem to be reached, the solution heaters are not switched on.
Cause:	Brief dropping of the water level in the heater delay time of max. 4min. The replenisher pumps stop until the water level is reached again and the circulation starts, the level drops again. The cause for this level drop in the water may be a leaking anti-algae solenoid valve or a defective O-ring at the tank drain taps.
Remedy:	Check the anti-algae solenoid valve and the O-ring and replace if necessary.

The anti-algae solenoid valve may get leaks as a result of chlorine used in the water tank.

3.3 Faulty dryer triggering after replacement of Control Board PCB1

Error:	After replacement of the Control Board PCB1, dryer step 1 is triggered at a too high nominal voltage and the trigger voltage of dryer step 13 (10) is too low.
Cause:	After replacement of the PCB1 board the three wires protective earth (PE), neutral (N), and phase (L) must be correctly connected on the terminal block XK1. As the assignment of the wires on the terminal block is not marked, neutral (N), and phase (L) were mixed up during the installation of the new board, and thus the dryer steps were triggered the wrong way round.
Remedy:	Correct the wiring of Control Board PCB1 (see Chapter 6.5).

4 Internal Error Diagnosis

If certain errors occur during operation (listing of errors: see Chapter 4.2) the internal error diagnostic is started. The display does not yet show an error. By means of internal tests the machine software tries to determine the error cause more detailed.

The error diagnostics will not START during FILM CYCLE or Service 506! The procedure of an internal error diagnosis may take up to 4 minutes until the error is displayed.

If it was possible to specify or locate the error cause by an internal error diagnosis, the corresponding service will be displayed. Otherwise the original service number or the corresponding plaintext is displayed.

4.1 Flow chart

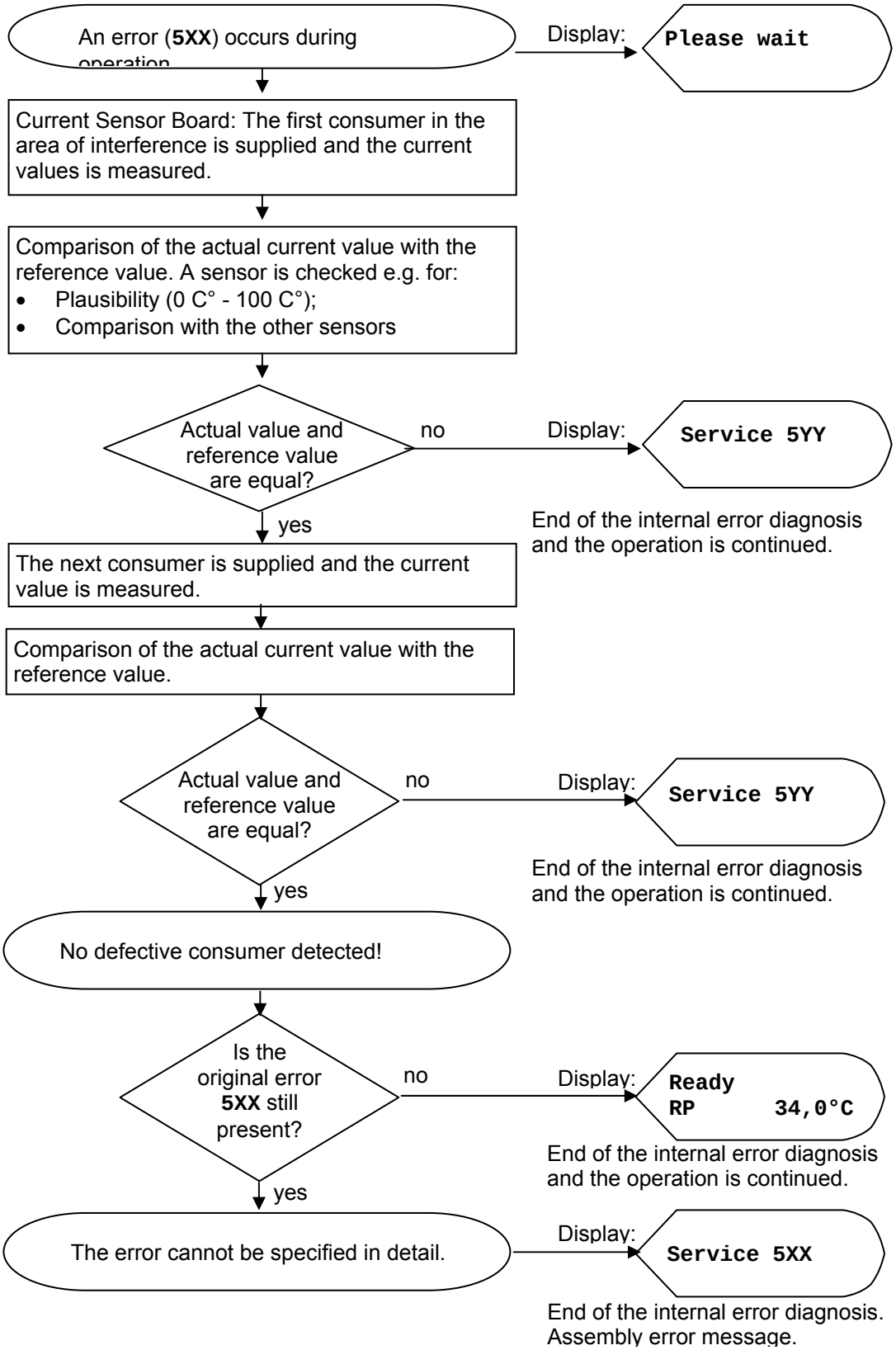

4.2 Error list for internal error diagnosis

The internal error diagnostics routine is started in case of the following errors:

Service number	Error description	Possible results of the internal diagnosis
SERVICE 501	Dev. temperature too high > 1 °C above NOM. value.	Service 501, 518, 535, 536, 549
SERVICE 502	Dev. temperature too low > 1 °C below NOM value, or temperature increase within 4 min. < 1 K	Service 502, 518, 535, 536, 549
SERVICE 503	Fixer temperature too high (> 40°C)	Service 503, 519, 535, 536, 549
SERVICE 504	Fixer temperature too low (<28°C) or temperature increase within 4 min. < 1 K	Service 504, 519, 535, 536, 549
SERVICE 505	Temperature increase in the dryer within 30sec. <2K	Service 505, 520, 535, 536, 549
SERVICE 506	Speed deviation of the drive motor > 50%.	Service 506, 549, 550
SERVICE 507	Developer level too low	Service 507, 549, 562
SERVICE 508	Fixer level too low	Service 508, 549, 563
SERVICE 509	Water level too low	Service 509, 535, 539, 549, 580, 582
SERVICE 514	Developer / Fix1 / Fix2 circulation not working.	Service 514, 535, 539, 549, 555, 556, 557, 558
SERVICE 515	Water circulation not working	Service 515, 535, 539, 549, 555, 556, 557, 558

Service number	Error description	Possible results of the internal diagnosis
SERVICE 574	Problem in the infrared heater	Service 535, 549, 574
SERVICE 579	Problem in the exhaust fan	

4.3 Activating the internal error diagnosis via the menu <Test & Adjust>

4.3.1 <Device ErrTest> Menu

The **<Test & Adjust> <Device ErrTest>** menu shows a listing of the errors **5XX** (see Chapter 4.2), which initiated the internal error diagnosis.
It is possible that current errors are only added to the list by switching the machine off and on.
The internal error diagnosis can also be started manually with the confirmation key ✔. Once the internal error diagnosis has been completed, repair instructions are displayed.

#n SERVICE 5XX (DD.MM. hh:mm)	Initiating service number with date
✔	The internal error diagnosis is started
Checking ... please wait	Internal error diagnosis in process.
Check supp. line and plug ST75	Repair instructions in plaintext for the specified service number **5YY** (see Section 4.4).

n =	List number
5XX =	Error before internal diagnosis
DD =	day
MM =	month
hh:mm =	time

4.3.2 <Autotest> Menu

By means of the functions in the menu **<Test & Adjust> <Autotest> <Test single id>** all error diagnostics routines for the errors **5XX** can be started individually.

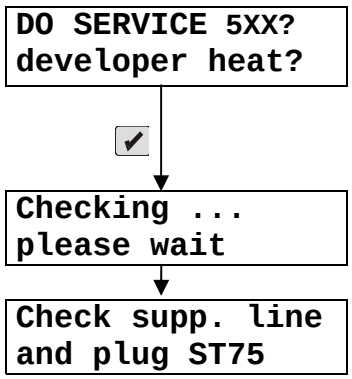

Service number with plaintext

5XX = Error before internal error diagnosis

The internal error diagnosis is started

Internal error diagnosis in process.

Repair instructions in plaintext for the specified service number **5YY** (see Section 4.4).

The function **<Test all autom.>** starts all diagnostics routines one after the other.

4.4 Repair instructions after activating an internal error diagnosis

After activating the internal error diagnosis in the menu **<Test & Adjust> <Device ErrTest>** or **<Autotest>** the diagnosis results are displayed in plaintext. The plaintext messages correspond to the following service numbers:

Plaintext	Service number
Check BE1, Si6, HZ3, GS1	SERVICE 501
Check BE1, Si6, HZ3, GS1	SERVICE 502
Check BE2, Si7, HZ2, GS1	SERVICE 503
Check BE2, Si7, HZ2, GS1	SERVICE 504
Check Si1,1Si1 Si3,HZ1,1Hz1,GS1	SERVICE 505

Plaintext	Service number
--	SERVICE 506
Check ST67,DEV sensor, hose.	SERVICE 507
Check level sens for bridging,GS1	SERVICE 507
GS1 defect all sens. incorrect	SERVICE 507
Check ST68,FIX1 sensor, hose.	SERVICE 508
Check ST76,FIX2 sensor, hose.	SERVICE 508
Check level sens for bridging,GS1	SERVICE 508
GS1 defect all sens. incorrect	SERVICE 508
Check ST69,WAT sensor, hose.	SERVICE 509
Short circuit sensor, GS1	SERVICE 509
GS1 defect all sens. incorrect	SERVICE 509
--	SERVICE 514

Plaintext	Service number
--	SERVICE 515
Check sensor DEV line ST75	SERVICE 518
Check sensor FIX line ST78	SERVICE 519
Check sensor WAT line ST77	SERVICE 520
GS1 defect	SERVICE 535
No supply 24V1 GS1 defect	SERVICE 535
No supply 24V2 GS1 defect	SERVICE 535
24V1 faulty GS1 defect	SERVICE 535
24V2 faulty GS1 defect	SERVICE 535
AllSens Out Of Range GS1 defect	SERVICE 535
GS1 defect current too high	SERVICE 535
GS1 def. Output constant on	SERVICE 536

Plaintext	Service number
24V1 faulty M4-M7,GS1 defect	SERVICE 539
Supply line M4-M7,GS1 defect	SERVICE 539
Current too high M4-M7,GS1 defect	SERVICE 539
No 24V supply Si9,GS1 defect	SERVICE 539
Motor M4-M7 defect	SERVICE 539
CurrentSens defect	SERVICE 549
M2 too slow check M2, GS1	SERVICE 550
M1 too fast check M2, GS1	SERVICE 550
Check SI8,M2 GS1 BU4, GS1	SERVICE 550
Revolut. Detect. 0M7 defect	SERVICE 555
Check impeller 0M7 defect	SERVICE 555
Revolut. Detect. 0M6 defect	SERVICE 556

Plaintext	Service number
Check impeller 0M6 defect	SERVICE 556
Revolut. Detect. 0M5 defect	SERVICE 557
Check impeller 0M5 defect	SERVICE 557
Revolut. Detect. 0M4 defect	SERVICE 558
Check impeller 0M4 defect	SERVICE 558
--	SERVICE 559
Check line_30M1 30M1, GS1 defect	SERVICE 562
Check SI1,GS1	SERVICE 562
Check line_30M2 30M2, GS1 defect	SERVICE 563
Check SI1,GS1	SERVICE 563
IR1, 1IR1, Si5 GS1 Si3 defect	SERVICE 574
GS1 defect, Si9 ST4 to 0M1/1M1	SERVICE 575

Plaintext	Service number
0M1 or 1M1 defect	SERVICE 575
Supply line 1M2 1M2, GS1 defect	SERVICE 579
Fan blocked GS1 defect	SERVICE 579
Check line 30MG2 30MG2,GS1 defect	SERVICE 580
Check line 30MG1 30MG1,GS1 defect	SERVICE 582

Chapter 6.4

Contents

1 Control Board PCB1 1

1 Control Board PCB1

CM+952709450 (F8.5270.7890)

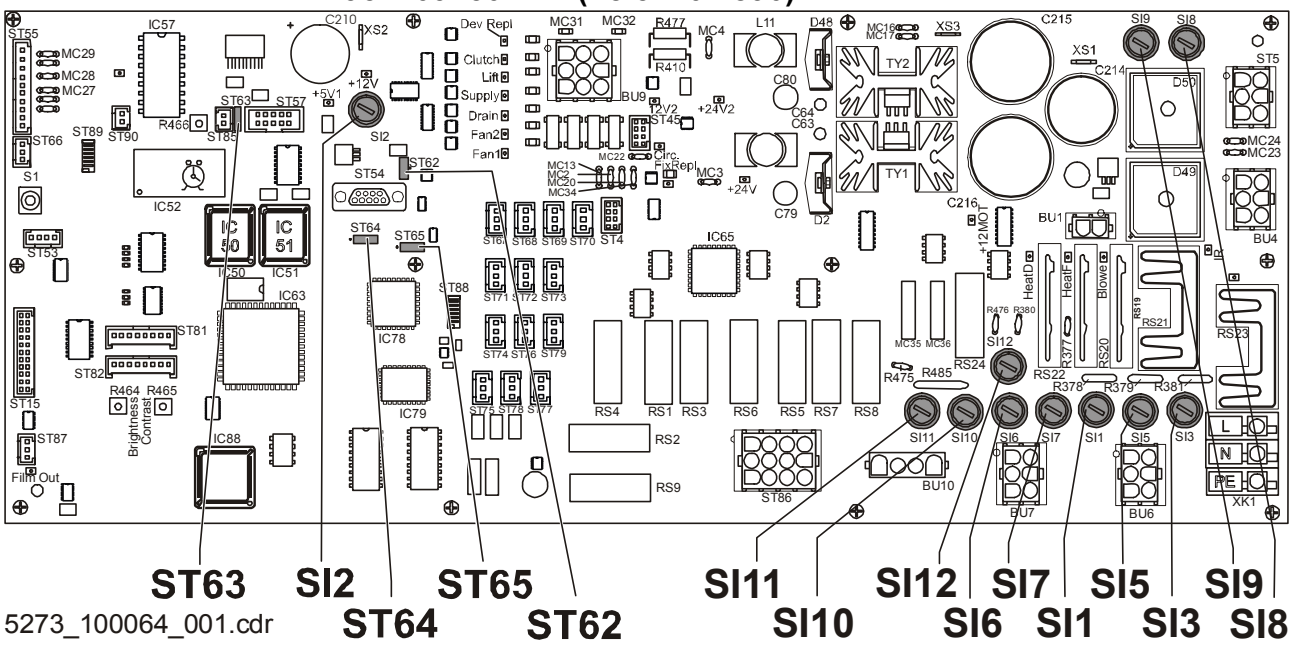

Figure 1

Designation	Value	Description
SI1	1 A slow	Dryer fan 0M1 / 1M1 Replenisher pumps developer 2M1 / fixer 2M2
SI2	1.25 A slow	+12V2 DC
SI3	10 A slow	Dryer convection heater 0HEAT1 / 1HEAT1
SI5	6.25 A slow	Dryer infrared heater 0IR1 / 1IR1
SI6	6.25 A slow	Developer heater 0HEAT3
SI7	6.25 A slow	Fixer heater 0HEAT2
SI8	6.25 A slow	+24V DC
SI9	6.25 A slow	+24V1 / +24V2 / +42 V DC
SI10	10 A slow	230 VAC mains supply primary side
SI11	10 A slow	208 VAC mains supply primary side
SI12	10 A slow	200 VAC mains supply primary side

Plug	ST62	ST63	ST64	ST65
Code	open	open	open	open

Chapter 6.5

Contents

1 Panels 1

2 Removal and Installation of the Main Drive 2

2.1 Removing the lower horizontal shaft 3
2.2 Removing the vertical shaft 5
2.3 Removing the upper horizontal shaft 5
2.4 Installing the upper horizontal shaft 6
2.5 Installing the vertical shaft 7
2.6 Installing the lower horizontal shaft 8
2.7 Adjusting the bevel gears 11

3 Replacing the Dryer Convection Heater with Thermal Cutout 12

4 Replacing the Dryer Infrared Heater 13

5 Replacing the Bracket of the Infrared Heater 14

6 Control Board PCB1 15

6.1 Replacing the Control Board PCB1 15
6.1.1 Preparations 15
6.1.2 Replacement of PCB1 16
6.2 Replacing the clock chip IC52 18
6.3 Replacing the EPROMs IC50 and IC51 19

7 Current Sensor Board PCB2 20

8 Calibrating the Developer Temperature (CAL) 21

9 Replacing the Circulation Pumps 22

10 Layout of Developer, Fixer, and Water Rack 23

10.1 Roller diagram 23
10.2 Listing / illustration of all rollers 24
10.3 Guide plate diagram 25

10.4 Guide plates 26
10.5 Gear diagram 27
10.6 Listing / illustration of all gears 28

1 Panels

Disconnect the machine from the mains before starting any maintenance and/or repair activities. If a mains connection is absolutely necessary this maintenance and repair work must only be made by specially trained personnel.

For correct removal of panels refer to the illustration below.
Attach the panels and covers in reverse order for light tight connection.

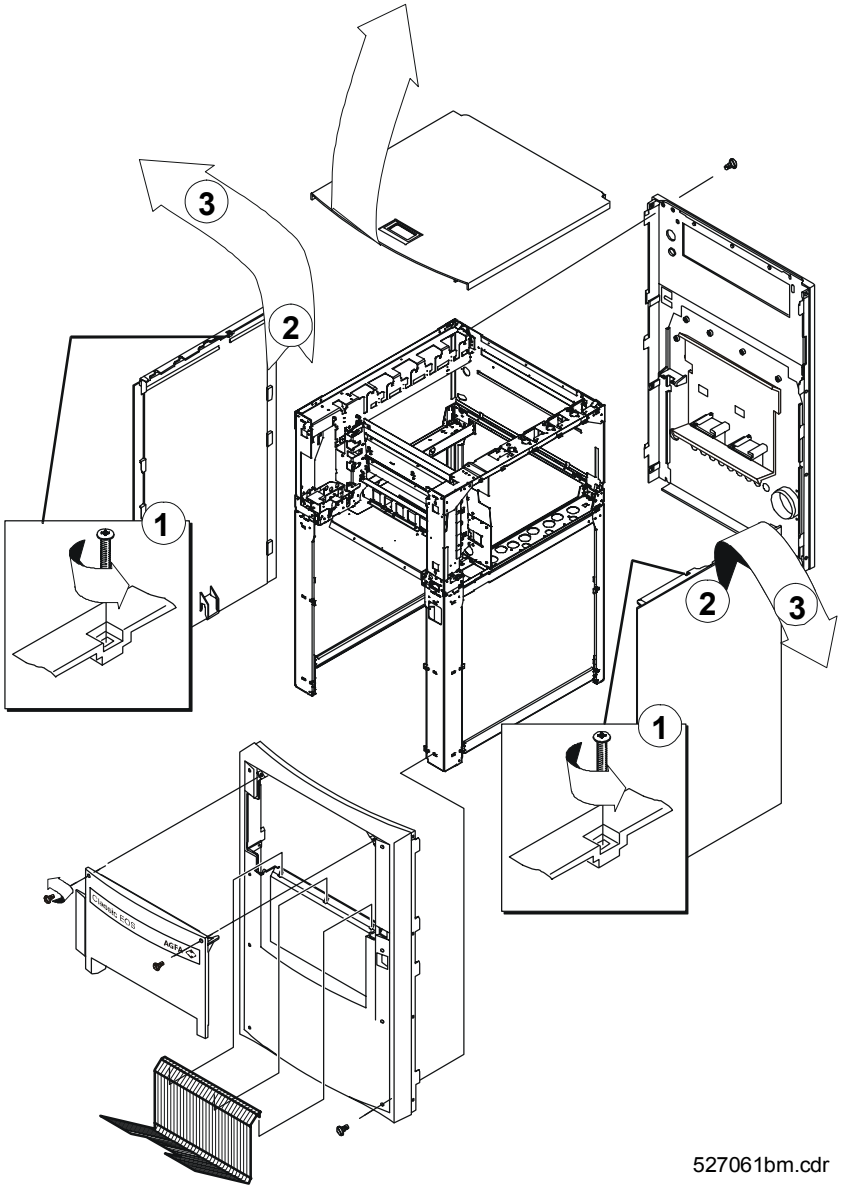

Figure 1

2 Removal and Installation of the Main Drive

Socket wrench (size 7), medium size Phillips screwdriver

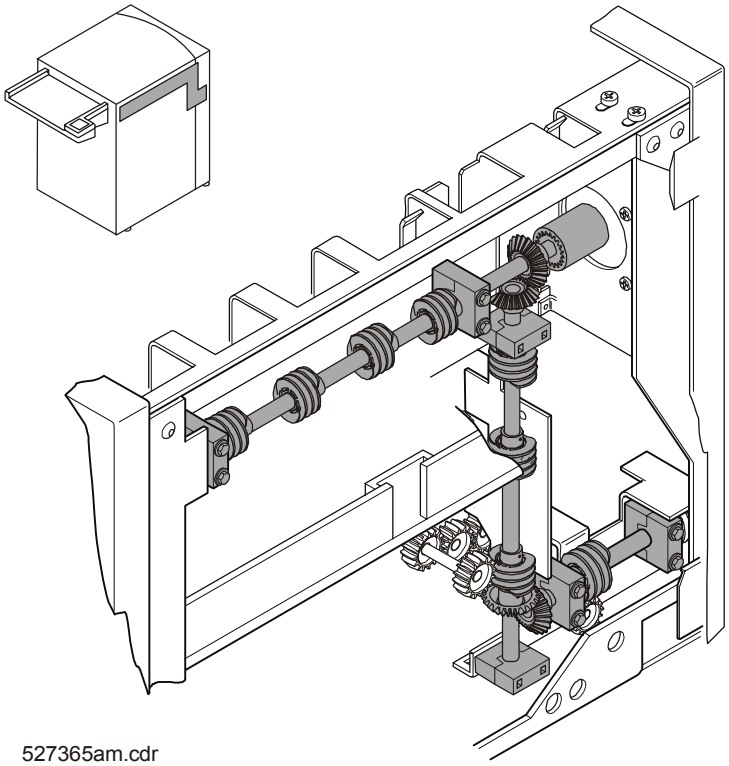

Figure 2

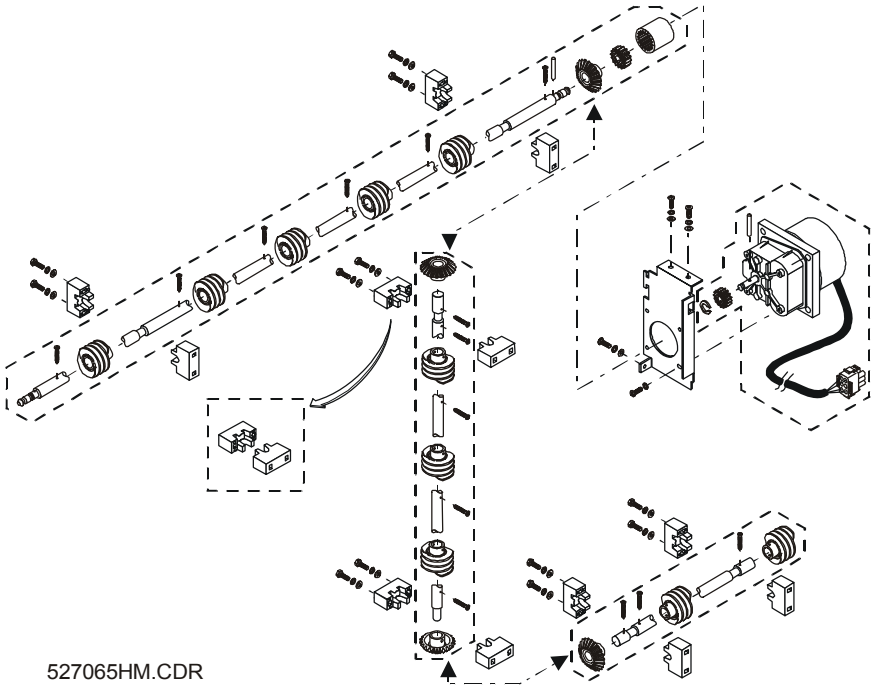

Figure 3

2.1 Removing the lower horizontal shaft

- Remove the cover and the right hand side panel.
- Loosen the two screws (1) at the bearing of the vertical shaft.

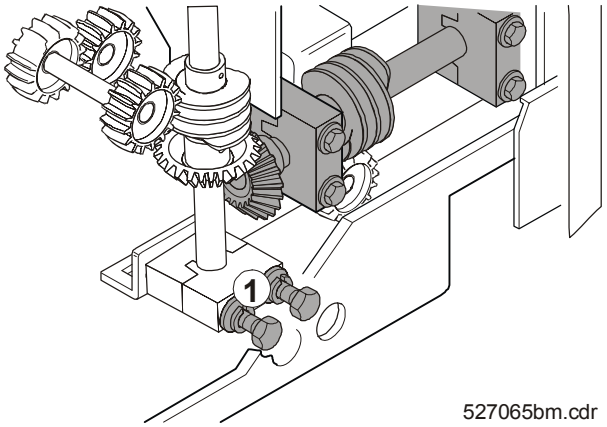

Figure 4

- Dismount the rear panel.
- Open the dryer flap (2).
- Unplug connections (3).
- Unthread the cables from the cable ties (4).
- Undo the screws (5).
- Remove the dryer flap (6).

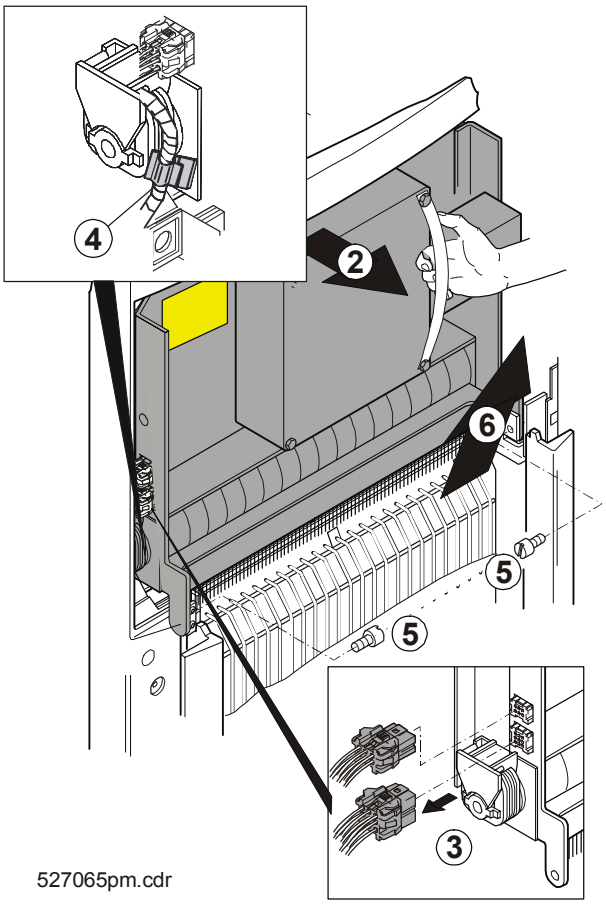

Figure 5

- Remove the two lower roller pairs (7) and (8).

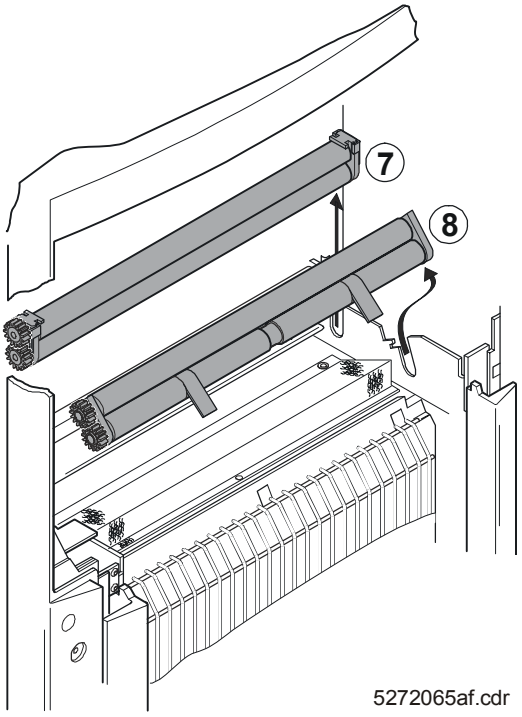

Figure 6

- Undo the screws (9), (10) and (11).
- Tilt the complete unit (12) (shaft and bracket) to open it and remove it towards the dryer.

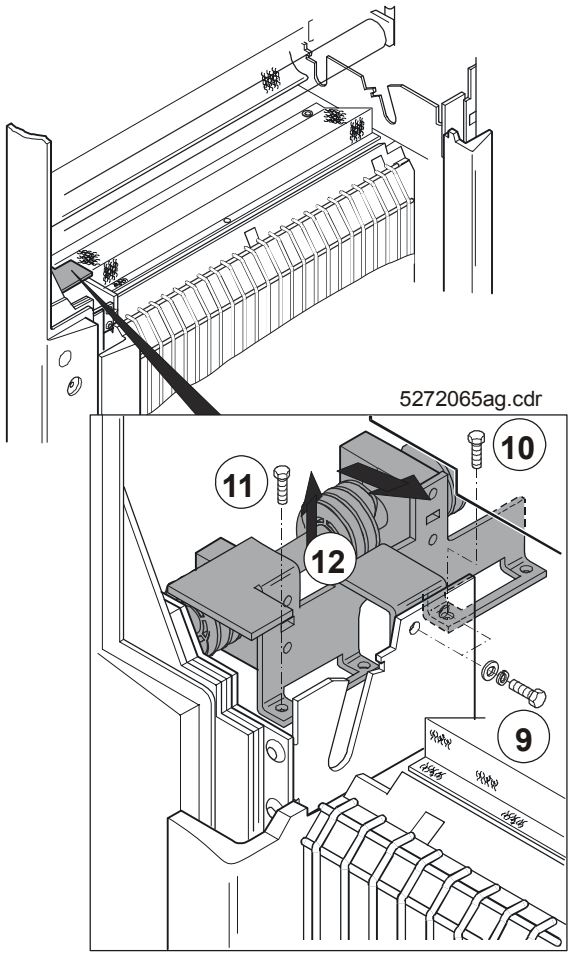

Figure 7

2.2 Removing the vertical shaft

- Undo the screws (1) and (2).
- Remove the vertical shaft.

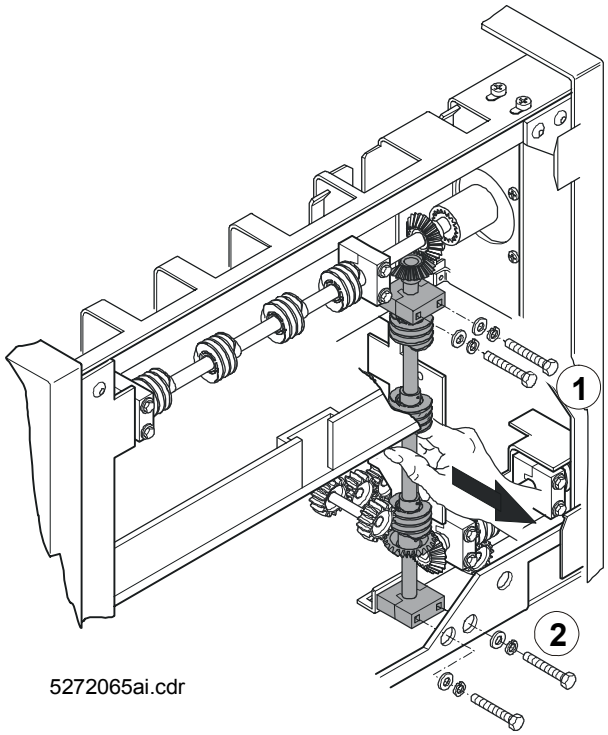

Figure 8

2.3 Removing the upper horizontal shaft

- Undo the screws (1) and (2).
- Disconnect motor (3) (by pushing it in the direction of the arrow).
- Undo the screws (4) and (5).
- Remove the horizontal shaft.

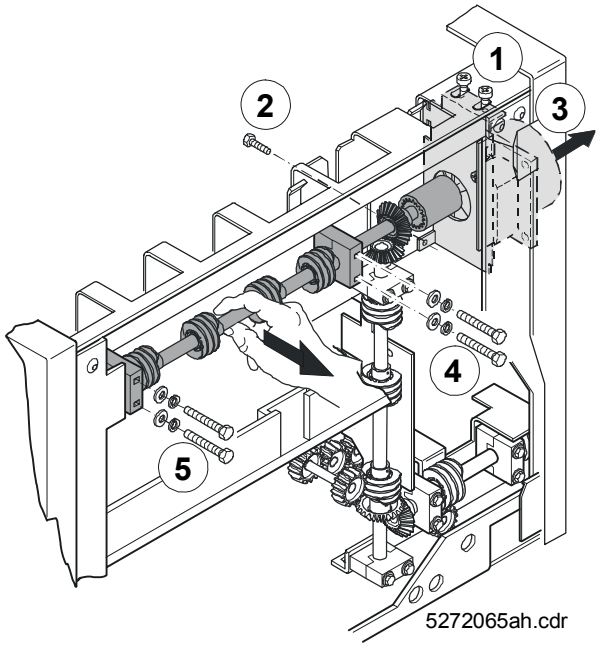

Figure 9

2.4 Installing the upper horizontal shaft

- Push the motor to stop position towards the horizontal shaft and fasten it with the screws (1) and (2).
- Check if the horizontal shaft has some axial play in the direction of the motor.
- If there is no axial play: loosen the motor mounting screws and push motor (3) by approx. 1 mm against the direction of the arrow.
- Fasten screws (1) and (2).

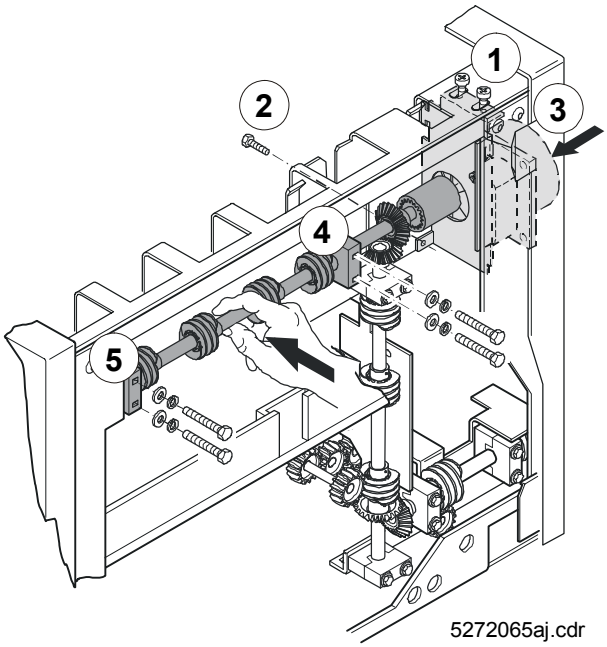

Figure 10

The bevel gears between the horizontal and the vertical shaft must be aligned (see Chapter 6.5, Section 2.7)

The fixed bearing (4) determines the alignment.

2.5 Installing the vertical shaft

- Fit the complete shaft.
- Fasten screws (1) and (2).

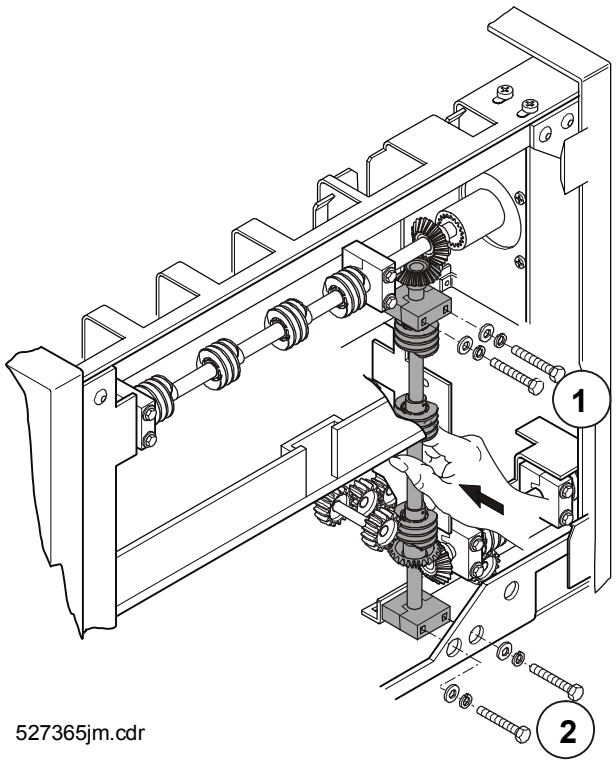

Figure 11

The bevel gears between the horizontal and the vertical shaft must be aligned (see Chapter 6.5, Section 2.7)

2.6 Installing the lower horizontal shaft

- Insert the complete unit (1) (shaft and bracket).
- Fasten screws (2) and (3).

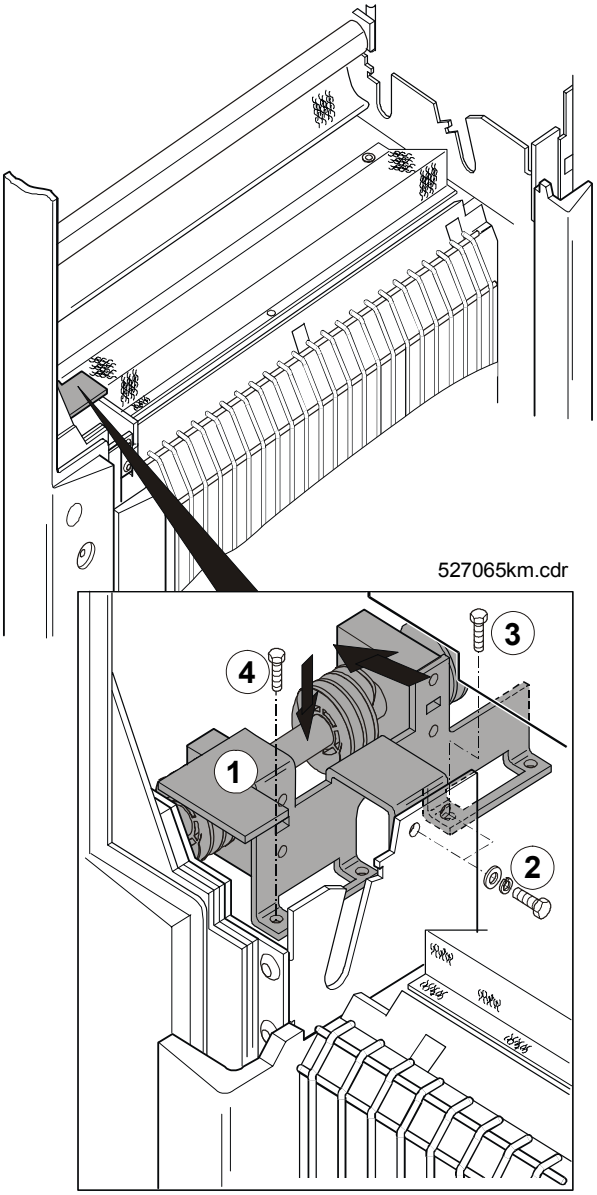

Figure 12

- Tighten the two screws (5).

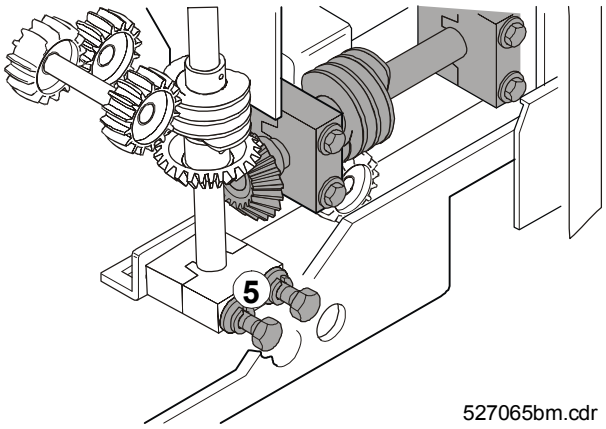

Figure 13

- Insert the two roller pairs (8) and (9).

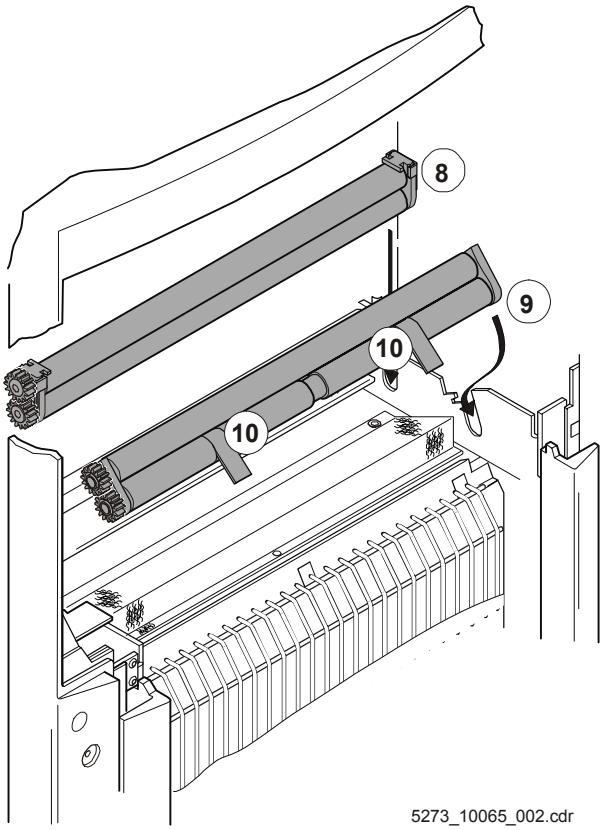

Figure 14

If the clips (10) on the red roller are not correctly mounted, the rollers will block!

- Insert the dryer flap.
- Fasten the dryer flap with screws (1).
- Connect the plugs (2).
- Fasten the cables in the cable tie (3).
- Close the dryer flap (4).
- Mount the rear panel.
- Mount the side panels.
- Mount the cover.

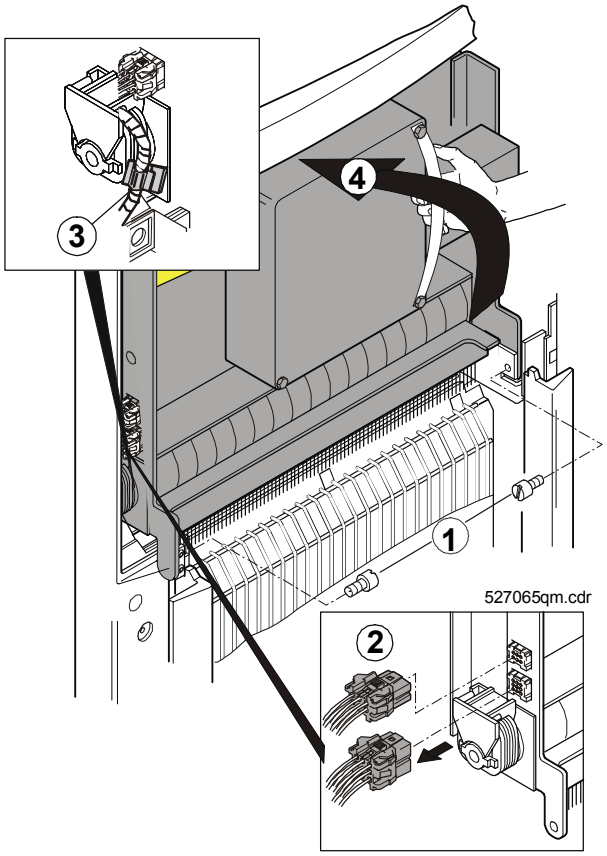

Figure 15

The bevel gears between the horizontal and the vertical shaft must be aligned (see Chapter 6.5, Section 2.7)!

2.7 Adjusting the bevel gears

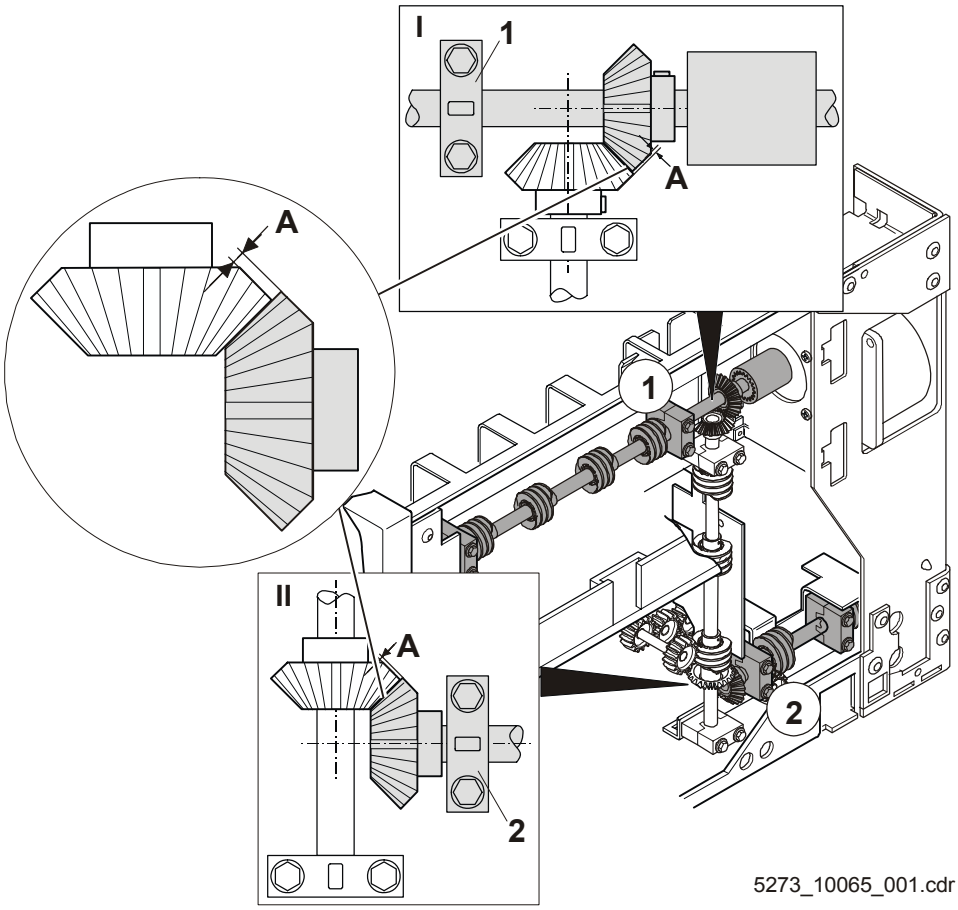

Figure 16

The bevel gears must be aligned. Displacement (A) on the bevel gears must not exceed 0.5 mm.

Adjustment of the vertical shaft is not required.

- Adjustment of the upper horizontal shaft or the bevel gears pair I is made on the bearing (1).
- Adjustment of the lower horizontal shaft or the bevel gears pair II is made on the bearing (2).

3 Replacing the Dryer Convection Heater with Thermal Cutout

Large screwdriver, medium Phillips screwdriver, medium screwdriver

- Disconnect the machine from the mains.
- Remove the top cover and the side panels.
- Unplug the 3-wire control cable (1) at the heater.

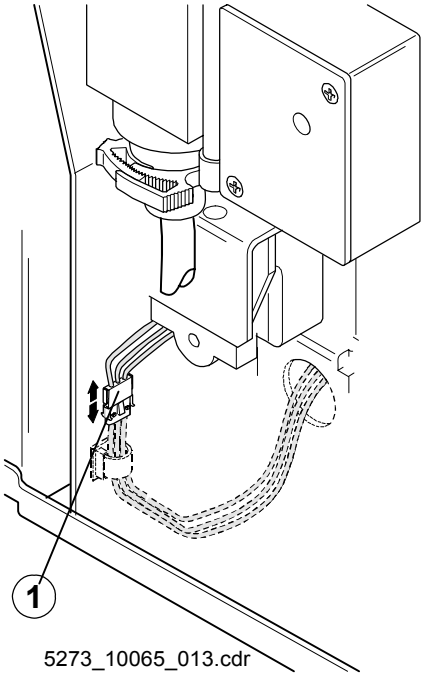

Figure 17

- Undo screw (2) and fold down PCB1 (3).
- Undo the screws (4).
- Pull out the convection heater (5) with thermal cutout (7) and unplug the 5-wire supply cable (6).

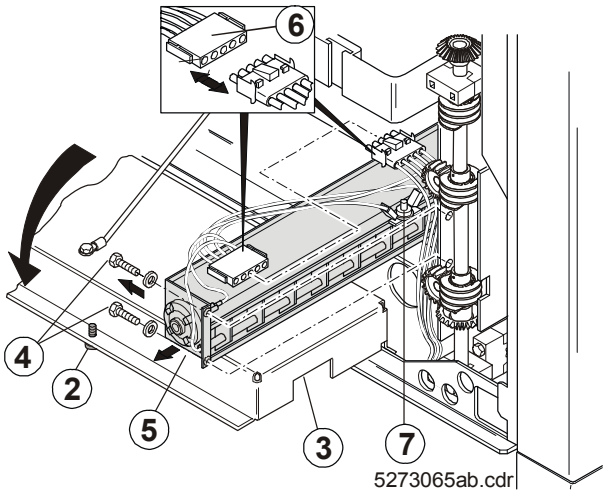

Figure 18

- Insert the new convection heater carefully.
- For further assembly proceed in reverse order.
- Connect the machine to the mains and switch on.
- Execute the TEACH IN procedure (see Chapter 6.2).

4 Replacing the Dryer Infrared Heater

Large screwdriver, medium Phillips screwdriver

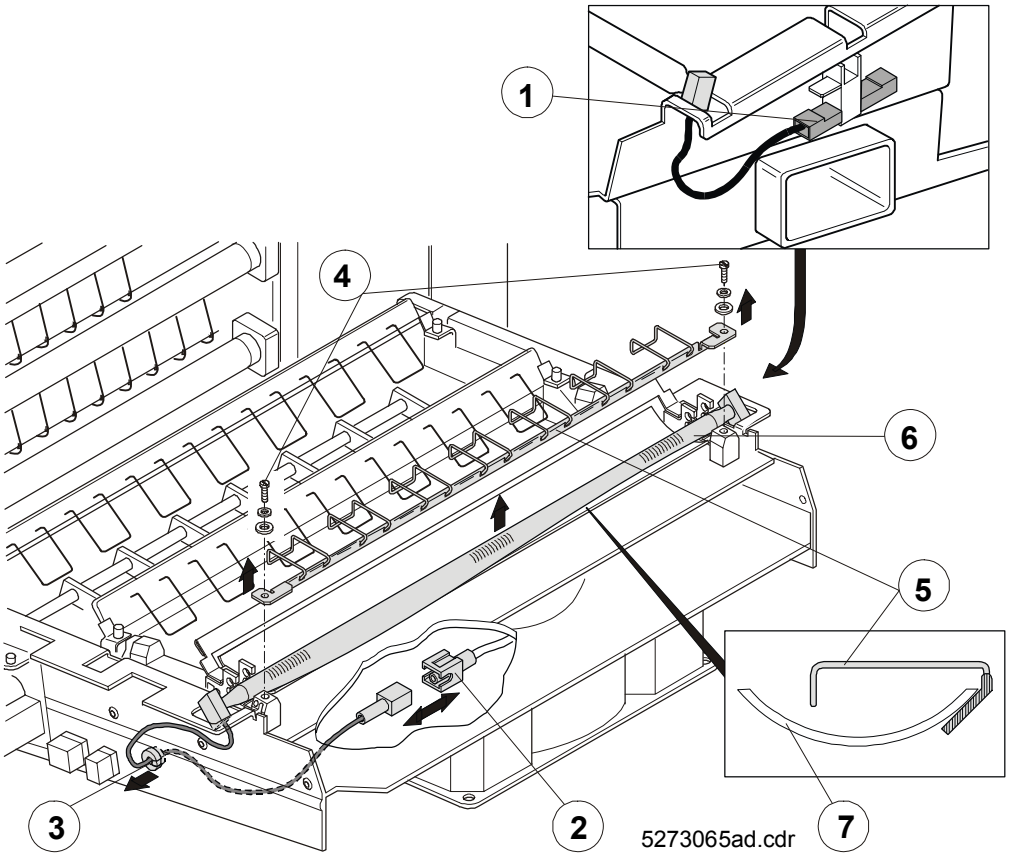

Figure 19

- Disconnect the machine from the mains.
- Dismount the rear panel.
- Open the dryer flap.
- Unplug the single-wire supply cable (1) and unthread it from the cable ties.
- Disconnect plug (2).
- Open the cable passage (3) and unthread the cable.
- Undo the screws (4) of the protection wire bracket (5) and remove the wire bracket.
- Pull the infrared heater (6) out of its holder.
- Insert the new infrared heater in the holder.
- Mount the wire bracket (5) on the reflector (7). The wire bracket must be outside the reflector!
- For further assembly proceed in reverse order.
- Connect the machine to the mains and switch on.
- Execute the TEACH IN procedure (see Chapter 6.2).

5 Replacing the Bracket of the Infrared Heater

Slide caliper or feeler gage, large screwdriver, medium Phillips screwdriver

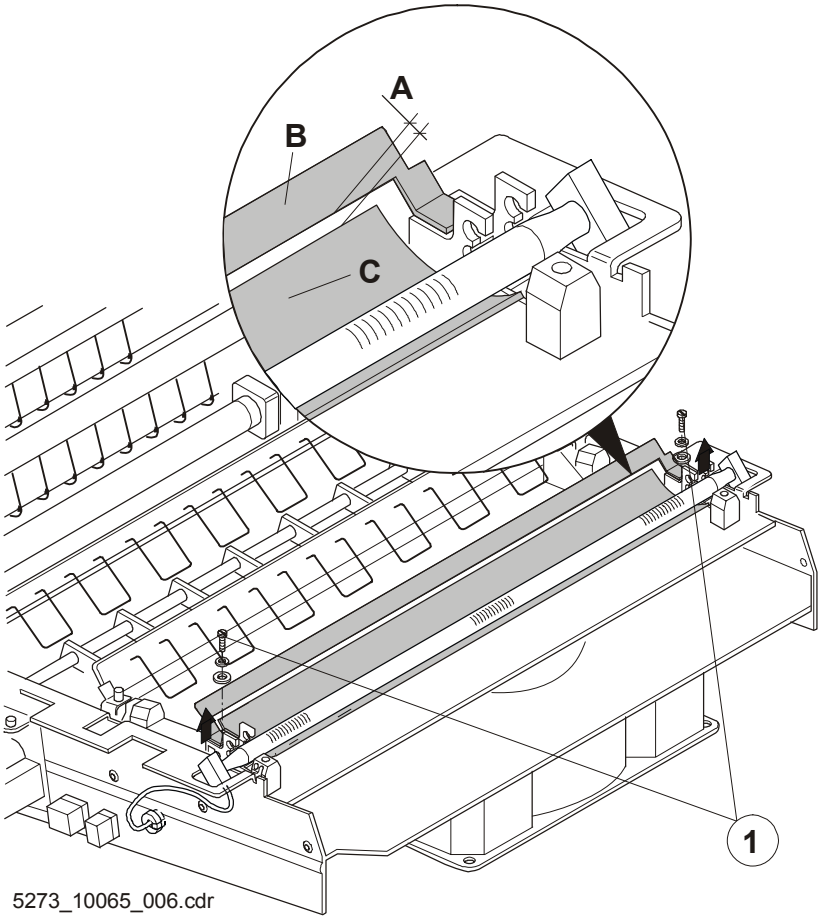

Figure 20

- Disconnect the machine from the mains.
- Remove the film chute and the rear panel.
- Open the dryer flap.
- Undo the screws (1) and remove the bracket.
- Insert the new bracket and connect the two screws (1).
- Adjust the space (A) between bracket (B) and reflector (C): The distance (A) must be 3.0 (+0.5) mm.
- Tighten screw (1) and check the distance again.
- Close the dryer flap: Ensure that the bracket does not touch the dryer rollers!
- Mount the panels.
- Connect machine to power.

If the distance is less than 3.0 mm, drying errors may occur (wave lines in film transport direction).

6 Control Board PCB1

Parts number of the Control Board: CM+952709450
(Label on board: F8.5270.7890._)

Observe the remarks about repairs on printed circuit boards in Chapter 6.1.

6.1 Replacing the Control Board PCB1

Large screwdriver, medium and small screwdriver

All operation relevant data is saved in the chips IC50, IC51, IC52, and IC79 on the Control Board. By replacement of the complete board this information is lost. Specifically:

Module	Data
EPROMs IC50, IC51	Machine software
Clock chip IC52	Calibration status of replenishment rates Calibration values of replenishment rates Processed film Expiration date for the maintenance interval Hours of operation Management of the error hit list
EEPROM IC79	All values and settings of the **<Service Settings>** menu List of detected problems (device error, error hit list)

6.1.1 Preparations

A BASEINIT is made after replacement of Control Board PCB1, i.e. all settings saved EEPROM (IC79) are reset to default. Therefore make sure to make the following preparations **before** replacement:

- Call up **<Quick Display>**
  <Service Settings>→<Quick Display>
- Write down all SETTINGS to re-enter them after replacement of the board (see Chapter 3).

6.1.2 Replacement of PCB1

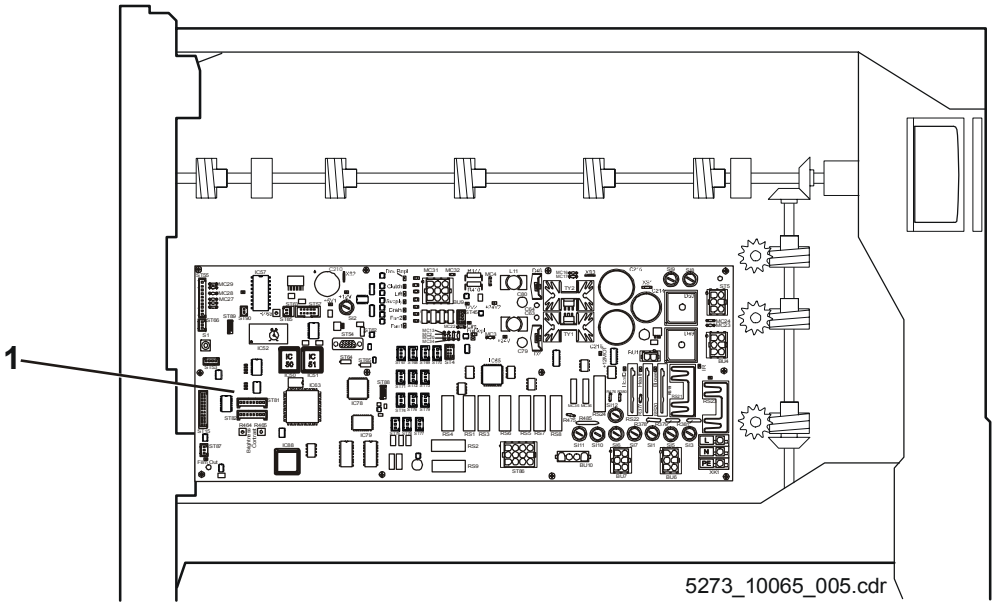

Figure 21

- Switch off machine and disconnect from mains.
- Remove top cover and side panels on the right.
- Unplug all cables on Control Board PCB1 (1).
- Undo the 12 screws on the Control Board PCB1.
- Remove the Control Board from the machine.
- Insert the new Control Board and fasten with 12 screws.
- Connect all cables;
  ensure correct connection of the three wires for protective earth (PE) , neutral (N), and phase (L) on terminal strip XK1:

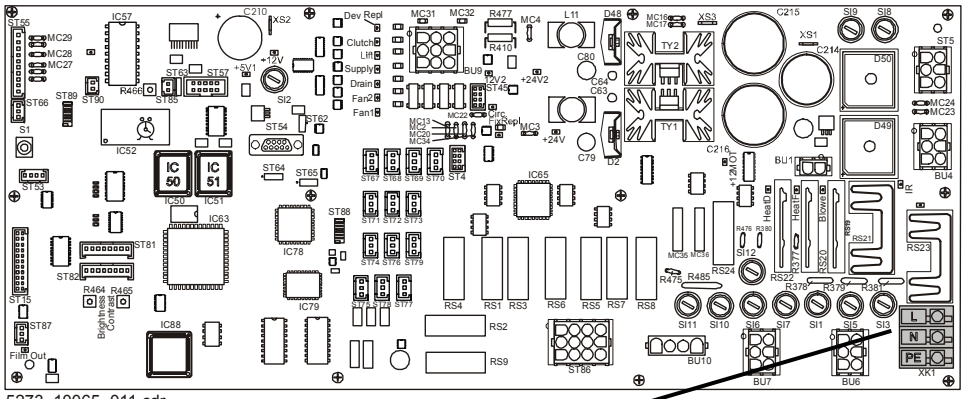

Figure 22

The wires must be connected as follows on the terminal strip XK1 on PCB1:

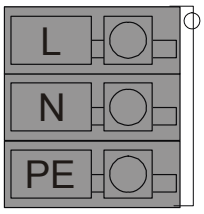

1	L =	phase	→	brown wire
2	N =	neutral	→	blue wire
3	PE =	protective earth	→	green-yellow wire

- Take EPROMs IC50 and IC51 (Software CLLC1107 and up) from the old board and mount them on the new board (replacement see Chapter 6.5).

Control Board CM+952709450 (F8.5270.7890._) is only compatible with Software CLLC1107 and up.

- Adjust the volume of the buzzer, and brightness and contrast of the display (control panel) with the potentiometers on the Control Board PCB1.

Buzzer volume	R466
Display brightness	R464
Display contrast	R465

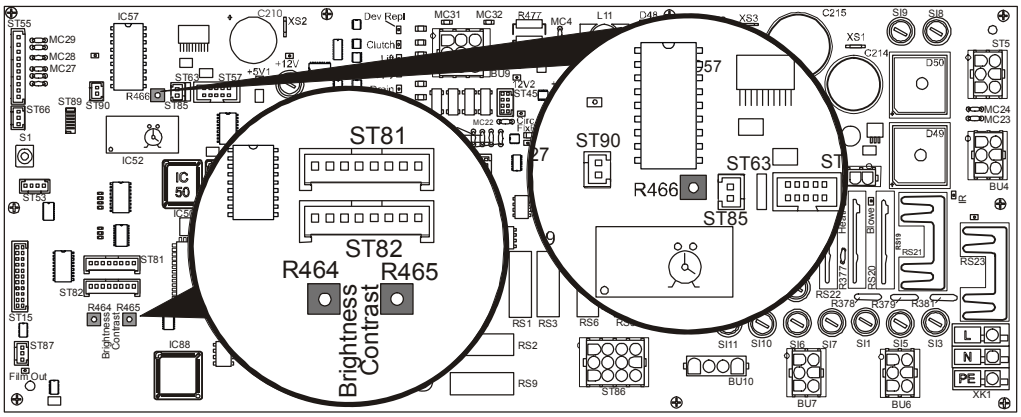

CM+952709450_ (F8.5270.7890._) 5273_10003_029.cdr

- Mount the covers and panels again.
- Connect machine to power.
- Press both arrow keys and hold them until the machine switches on. This resets all temporary and non-temporary infocounters to zero (second operator required, see Chapter 6.2).
- Calibrate the replenishment rates (only if you use the clock chip of the new board) (see Chapter 3).
- Select the application (see Chapter 3). After modification of the application a machine reset with BASEINIT is executed automatically. The display is temporarily blank and then switches to Ready display.
- Execute a **<Teach In>** (Chapter 6.2).
- Proceed with all further settings in **<Service Settings>**:
  The values noted before can be re-entered now (see Chapter 3). So the machine will work again in the previous mode.

6.2 Replacing the clock chip IC52

Large and small screwdriver, medium Phillips screwdriver

The following information is stored in the clock chip:

Calibration status of replenishment rates
Calibration values of replenishment rates
Processed film
Expiration date for the maintenance interval
Hours of operation
Management of the error hit list

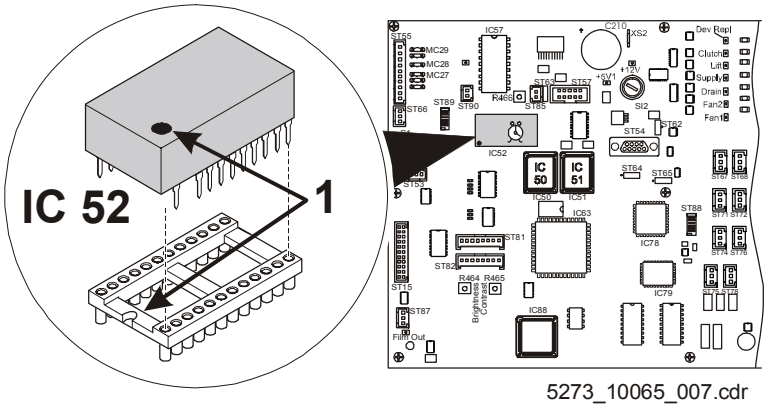

5273_10065_007.cdr

Figure 23

- Switch off machine and disconnect from mains.
- Remove top cover and side panels on the right.
- Carefully lift clock chip IC52 out of its socket using a small screwdriver.
- Insert the new clock chip according to the socket notch (1) in the **correct position**. Carefully place the pins on the socket and do not distort the chip when pressing it down!
- Mount the covers and panels again.
- Connect machine to power.
- Press both arrow keys and hold them until the machine switches on. This resets all infocounters to zero (second operator required, see Chapter 6.2).
- Calibrate the replenishment rates (see Chapter 3).
- Set the clock again (see Chapter 3).
- Check the function.

6.3 Replacing the EPROMs IC50 and IC51

Large screwdriver, medium Phillips screwdriver,
extraction tool for PLCC housings (CM+9999910050).

A BASEINIT is made after replacement of the machine software, i.e. all settings saved in EEPROM (IC79) are reset to default. Therefore make sure to make the following preparations **before** replacement:

- Call up <Quick Display>
  <Service Settings>→<Quick Display>
- Write down all SETTINGS to re-enter them after replacement of the software.

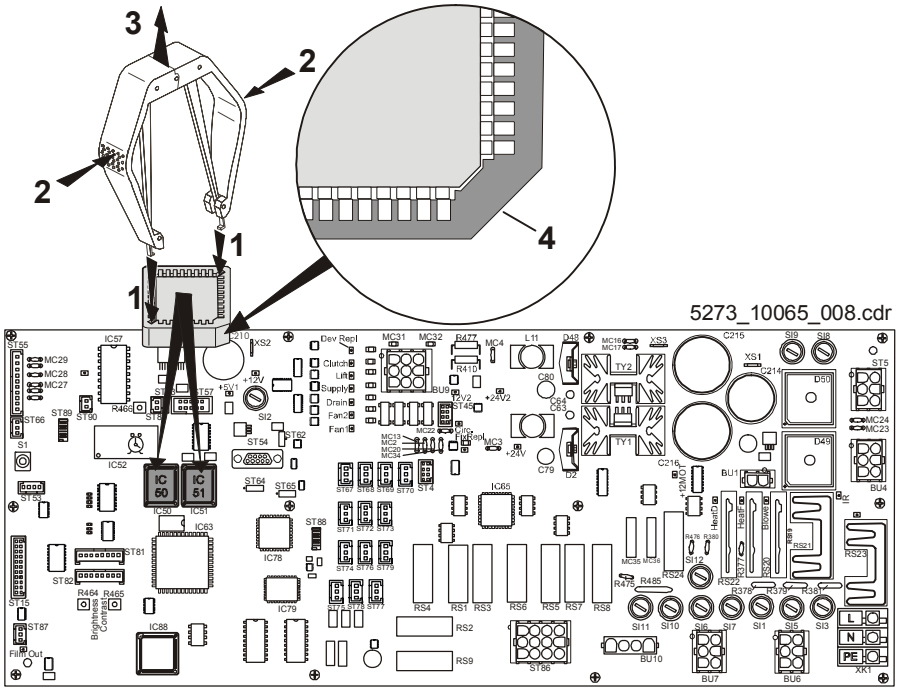

Figure 24

- Switch off machine and disconnect from mains.
- Remove top cover and side panels on the right.
- Pull the EPROMs IC50 and IC51 out of their sockets using the extraction tool for PLCC housings. (Sequence of actions: 1, 2, 3).
- Insert the EPROMS according to the socket notch (4) in the correct position.
- Mount the covers and panels again.
- Connect the machine to the mains and switch on.
- Select the application (see Chapter 3).
  After modification of the application a machine reset with BASEINIT is executed.
- Make all further settings in **<Service Settings>** (Chapter 3). The values noted before can be re-entered now. So the machine will work again in the previous mode.

7 Current Sensor Board PCB2

Large and medium screwdriver, medium Phillips screwdriver

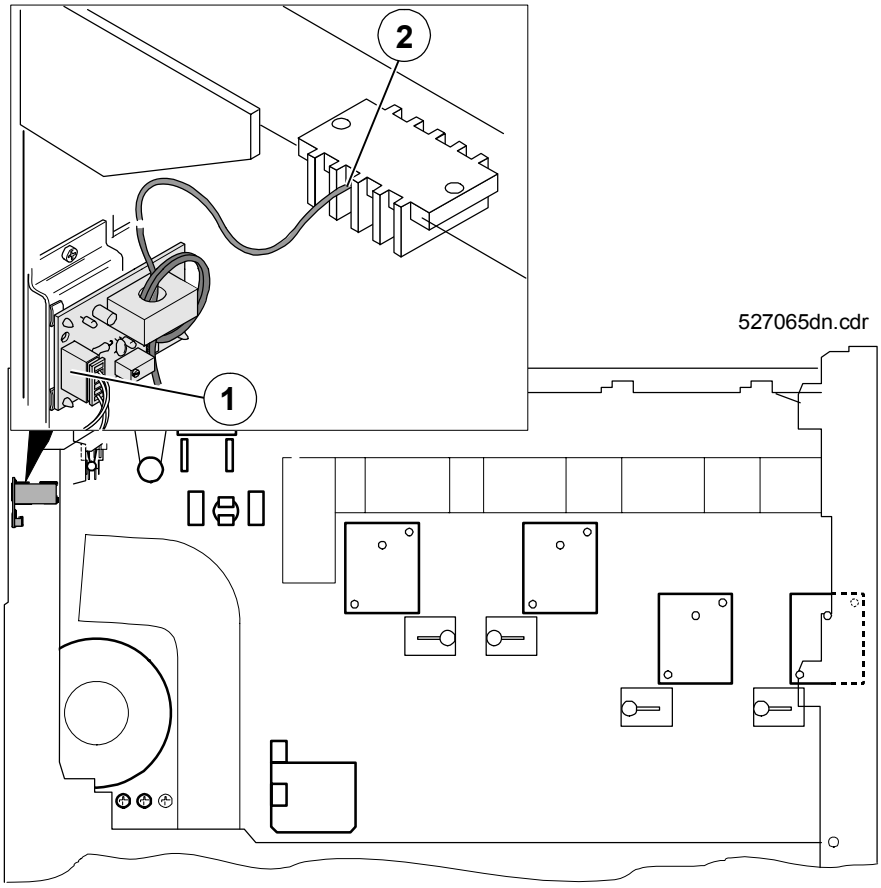

Figure 25

Switch off machine and disconnect from mains.

Remove top cover and side panels on the left.

- Unplug ST2 (1).
- Open the cable tie (2).
- Remove the Current Sensor Board PCB2 from the holder.
- Unthread the cable from the current sensor.
- Thread the cable from below through the new current sensor with **2 windings**.

Only one winding around the ring magnet results in incorrectly detected current values and thus in an error message (Service 549).

- Insert current sensor PCB2 in the holder.
- Plug in ST2 (1).
- Screw the cable to the cable terminal (2).

Mount the covers and panels again.

- Connect the machine to the mains and switch on.

Execute the **<TEACH IN>** procedure (see Chapter 6.2).

8 Calibrating the Developer Temperature (CAL)

Thermometer up to 50°C CM+9999902910

After replacement of the developer temperature sensor the sensor must be calibrated. The developer temperature sensor can be calibrated with the **<CAL DEV Sensor>**. The adjustment range is +/- 1 °C in steps of 0.1 °C.

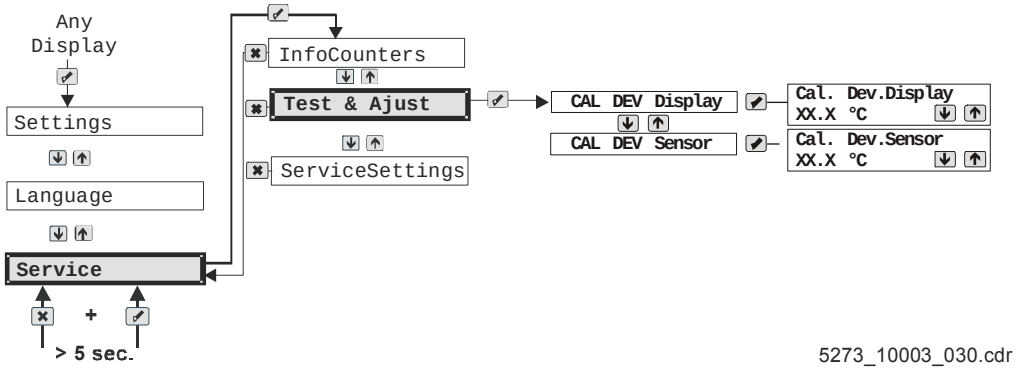

Figure 26

- Measure the developer temperature with the thermometer and check.
- Enter the resulting temperature under SERVICE program **<CAL DEV Sensor>**.
- Use the function **<CAL DEV Display>** to adapt the temperature indication on the display. The adjustment range is +/- 1 °C in steps of 0.1 °C.

9 Replacing the Circulation Pumps

Only install **blue** pumps (CM+9521026200) in this system.

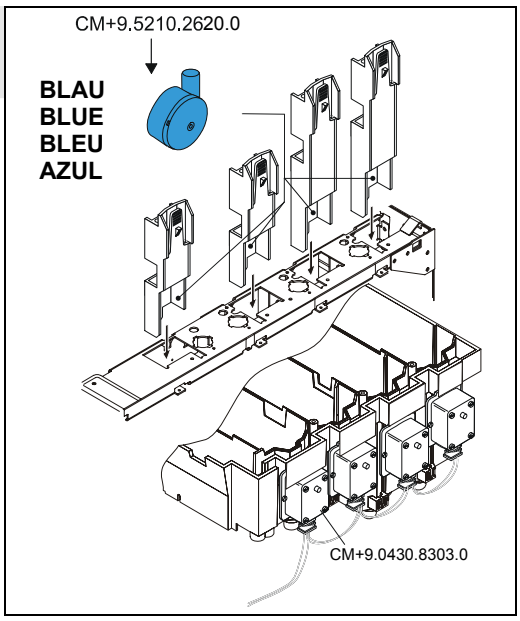

Figure 27

In the blue pumps the bearing bushes, special disk, and impeller shaft are made of ceramic material.

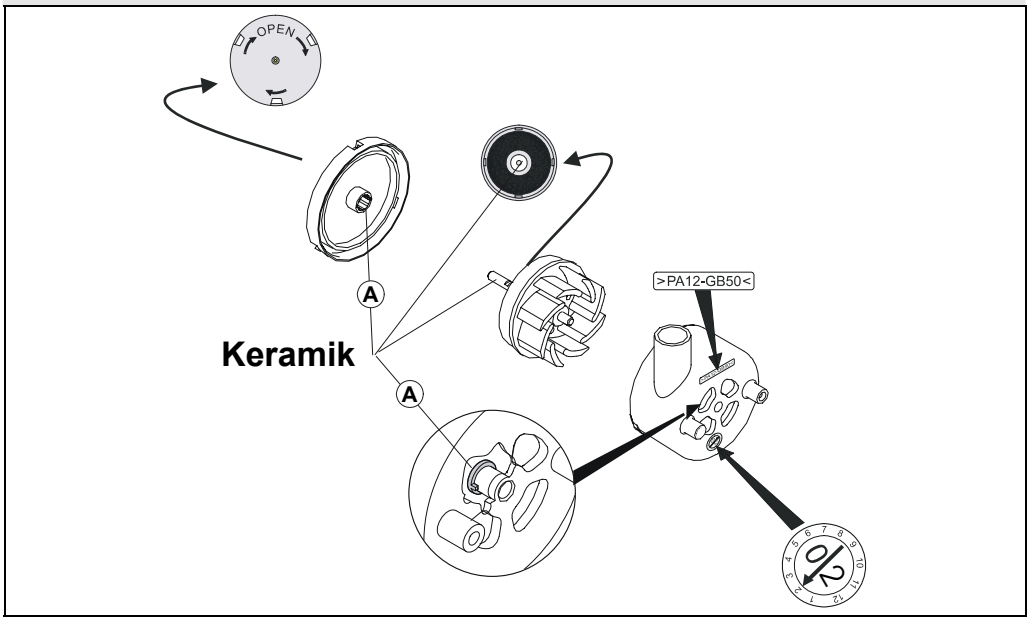

Figure 28

Pump repair possibility

- We do not stock any spare parts for these pumps!
- The pump is considered a wear part and must be replaced as a complete unit!

10 Layout of Developer, Fixer, and Water Rack

10.1 Roller diagram

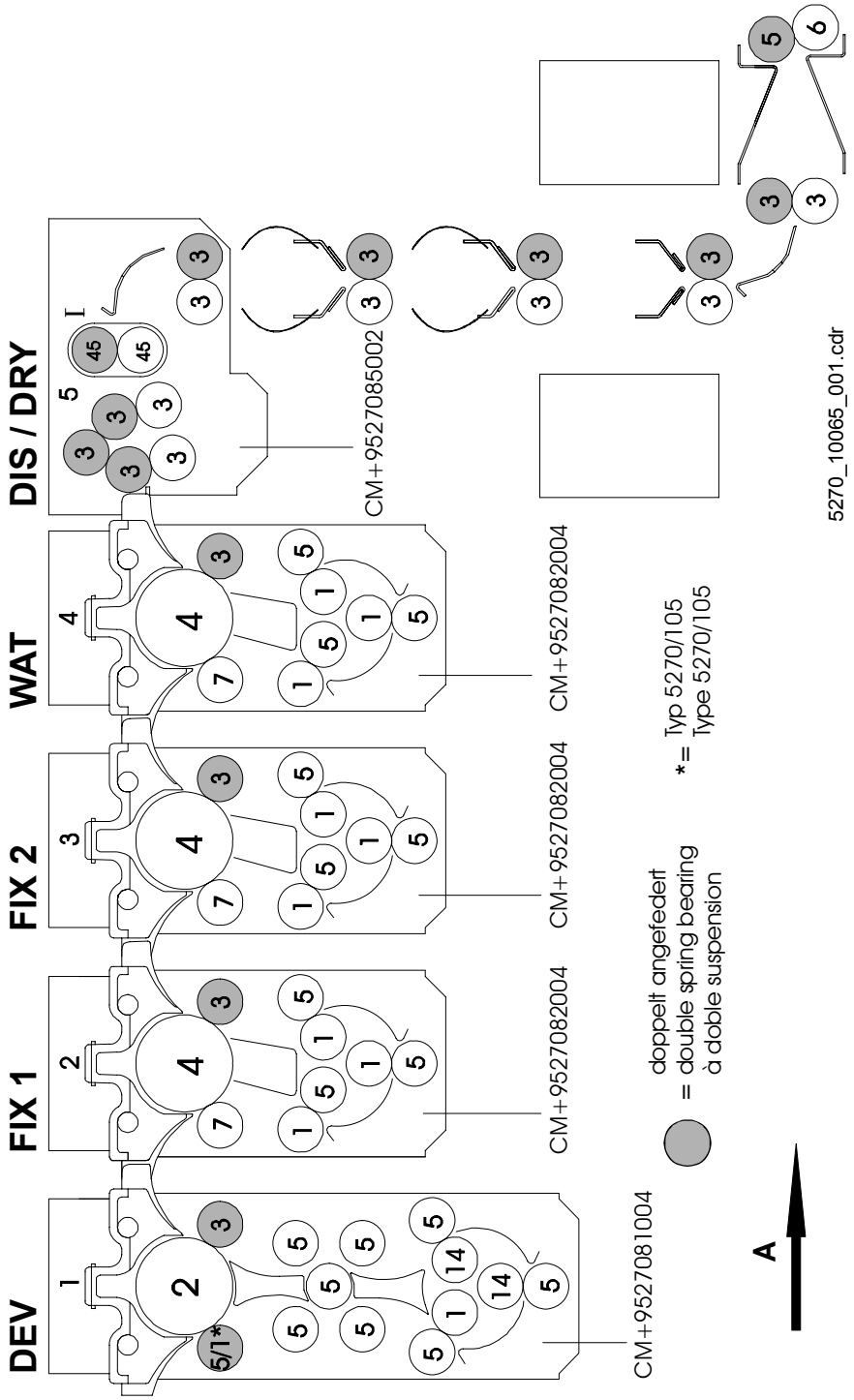

10.2 Listing / illustration of all rollers

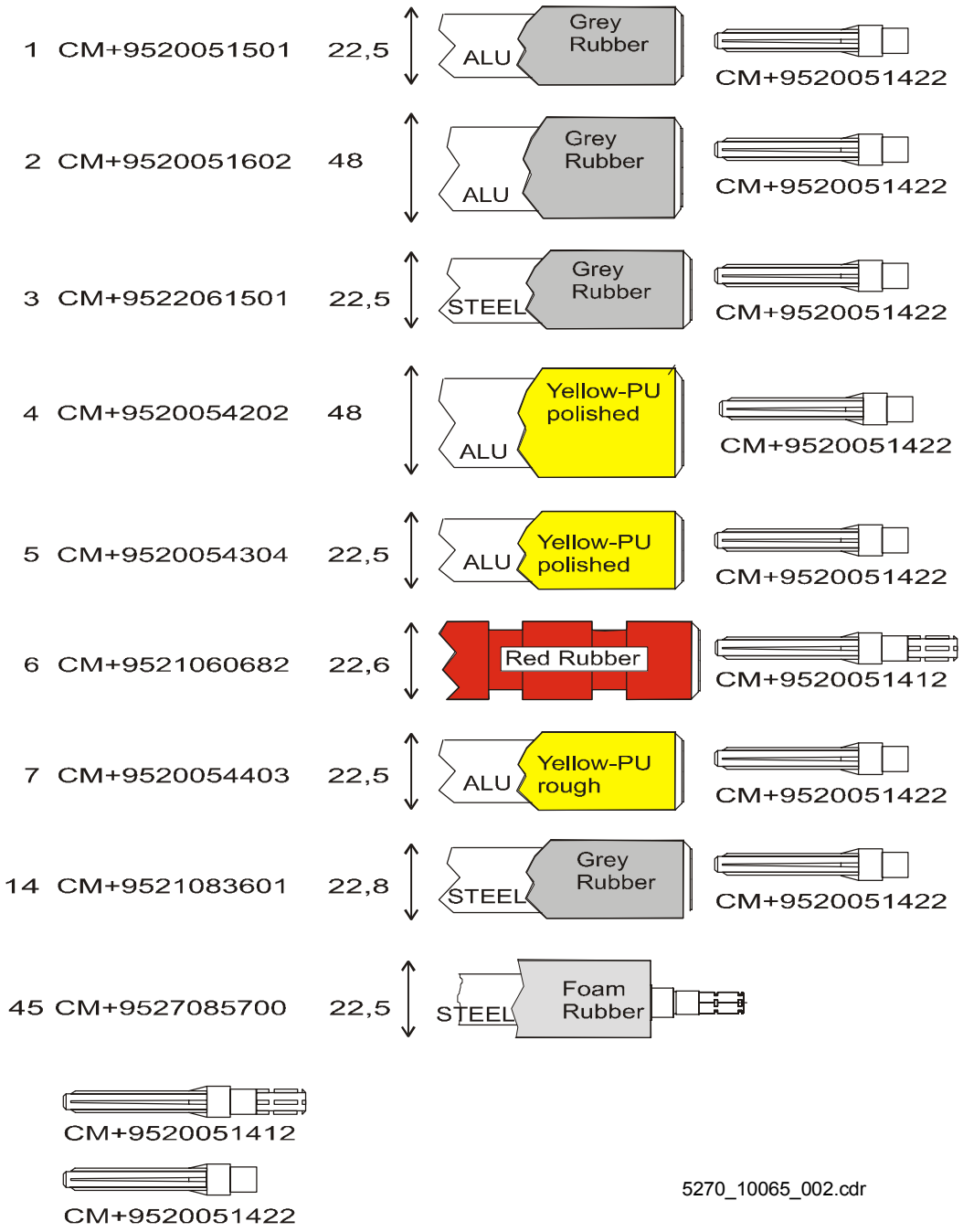

Rollers with aluminum pipe core (ALU) and rollers with steel pipe core (STEEL), they can be differentiated by their different weights.

10.3 Guide plate diagram

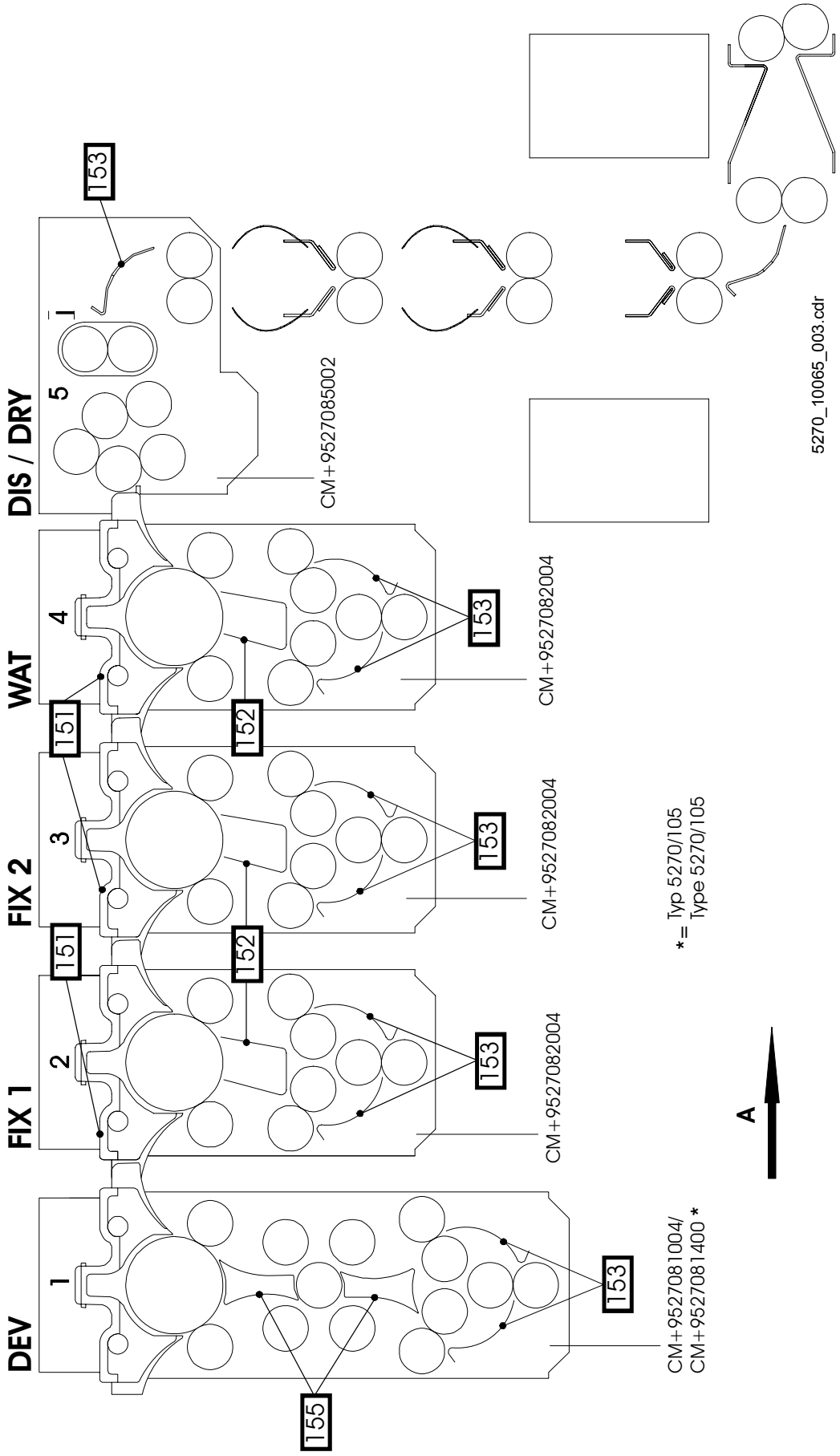

10.4 Guide plates

		Part number	Guide plate
	151	CM+9520055011	Guide plate, top
	152	CM+9522056041	Guide plate, middle
	153	CM+9520056032	Guide plate, crossover
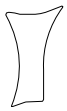	155	CM+9520051164	Guide plate, middle

10.5 Gear diagram

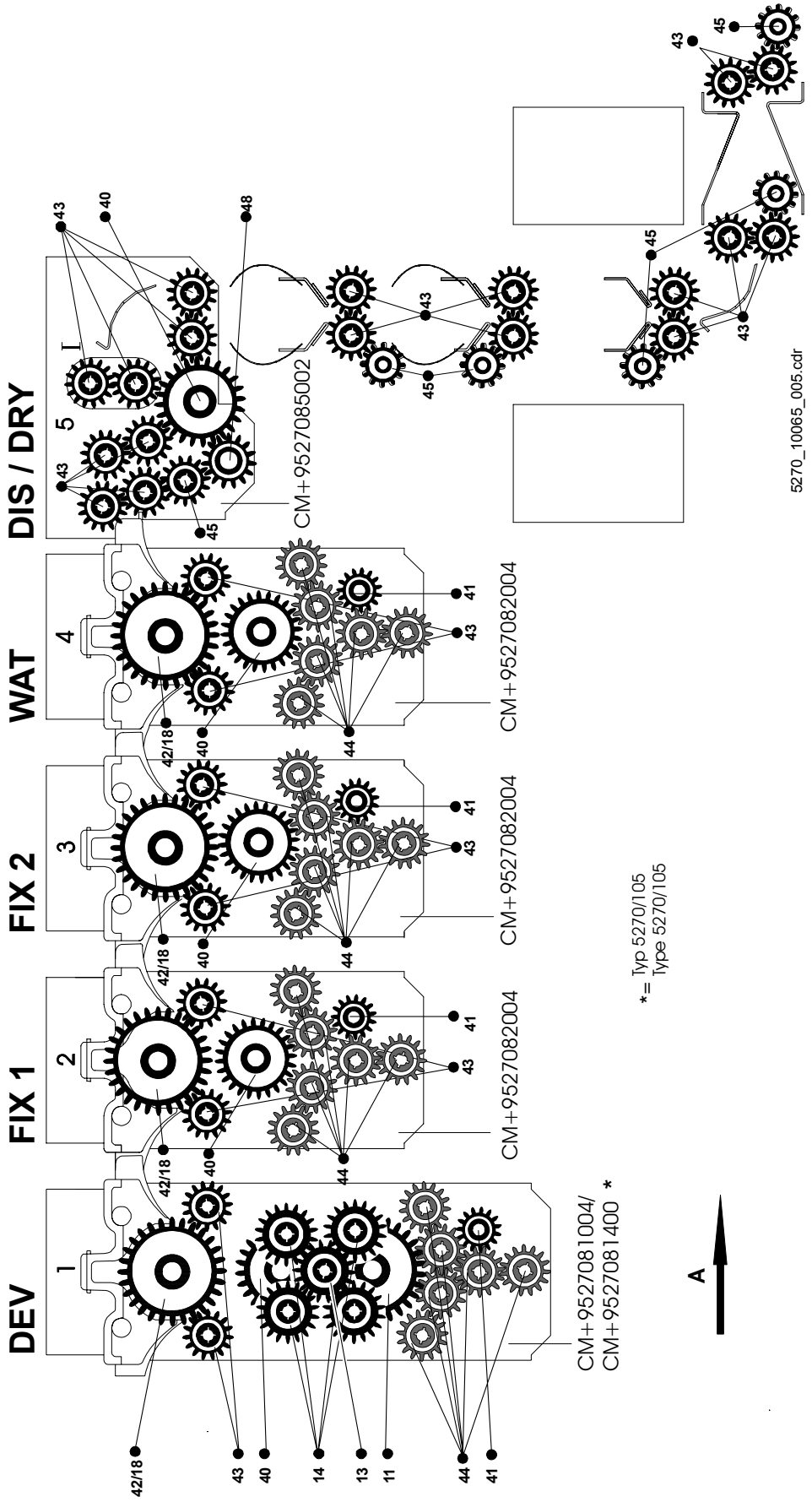

10.6 Listing / illustration of all gears

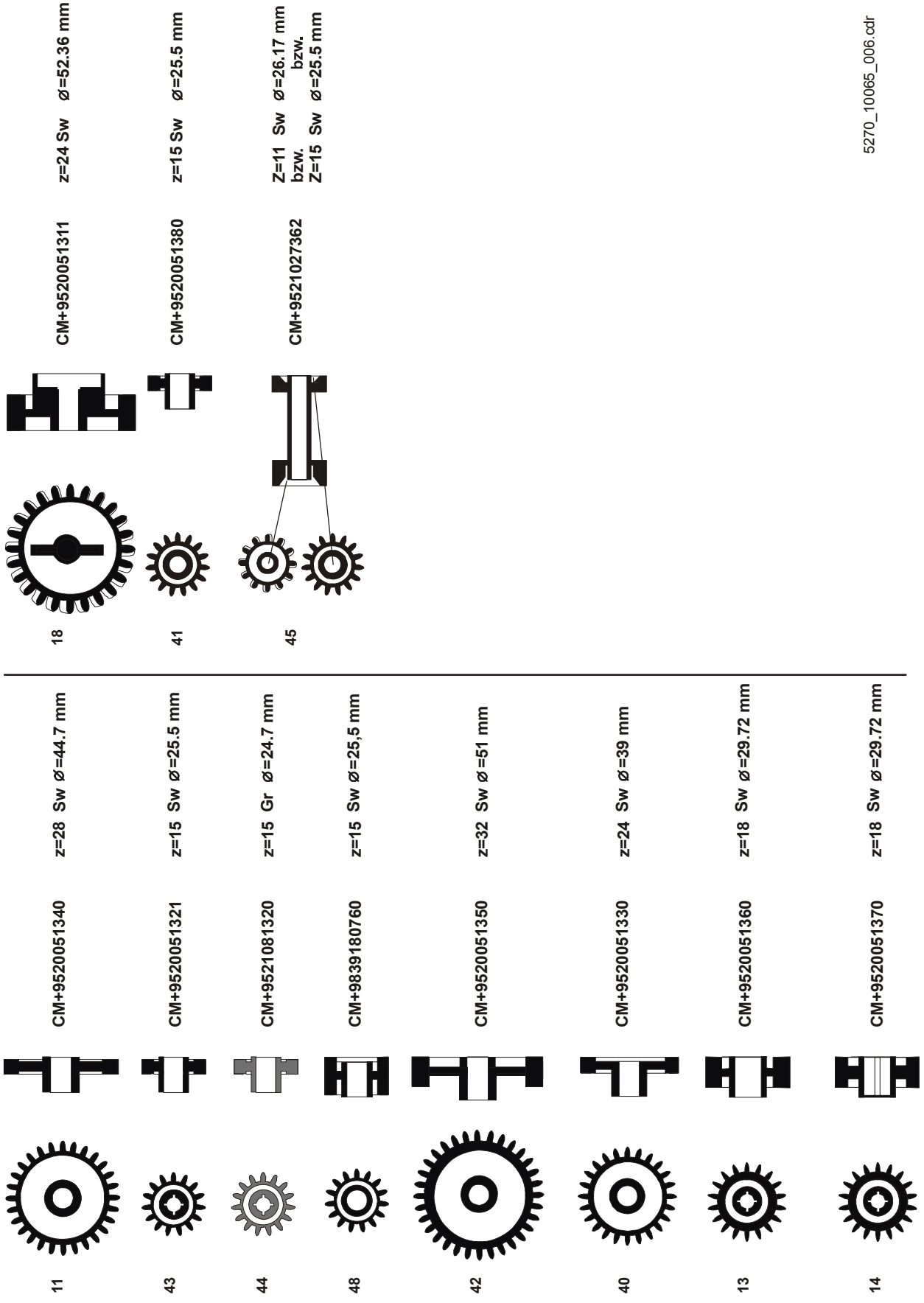

Chapter 6.6

Contents

1 Settings for Software Version CLLC1107 1

1.1 Settings 1

1.2 Infocounters 2

1.3 Test & Adjust 3

1.4 Service Settings 5

2 Default Settings after BASEINIT 7

2.1 Setup options depending on applications (process mode) Curix and LR3300 7

2.2 Exception: 15

1 Settings for Software Version CLLC1107

1.1 Settings

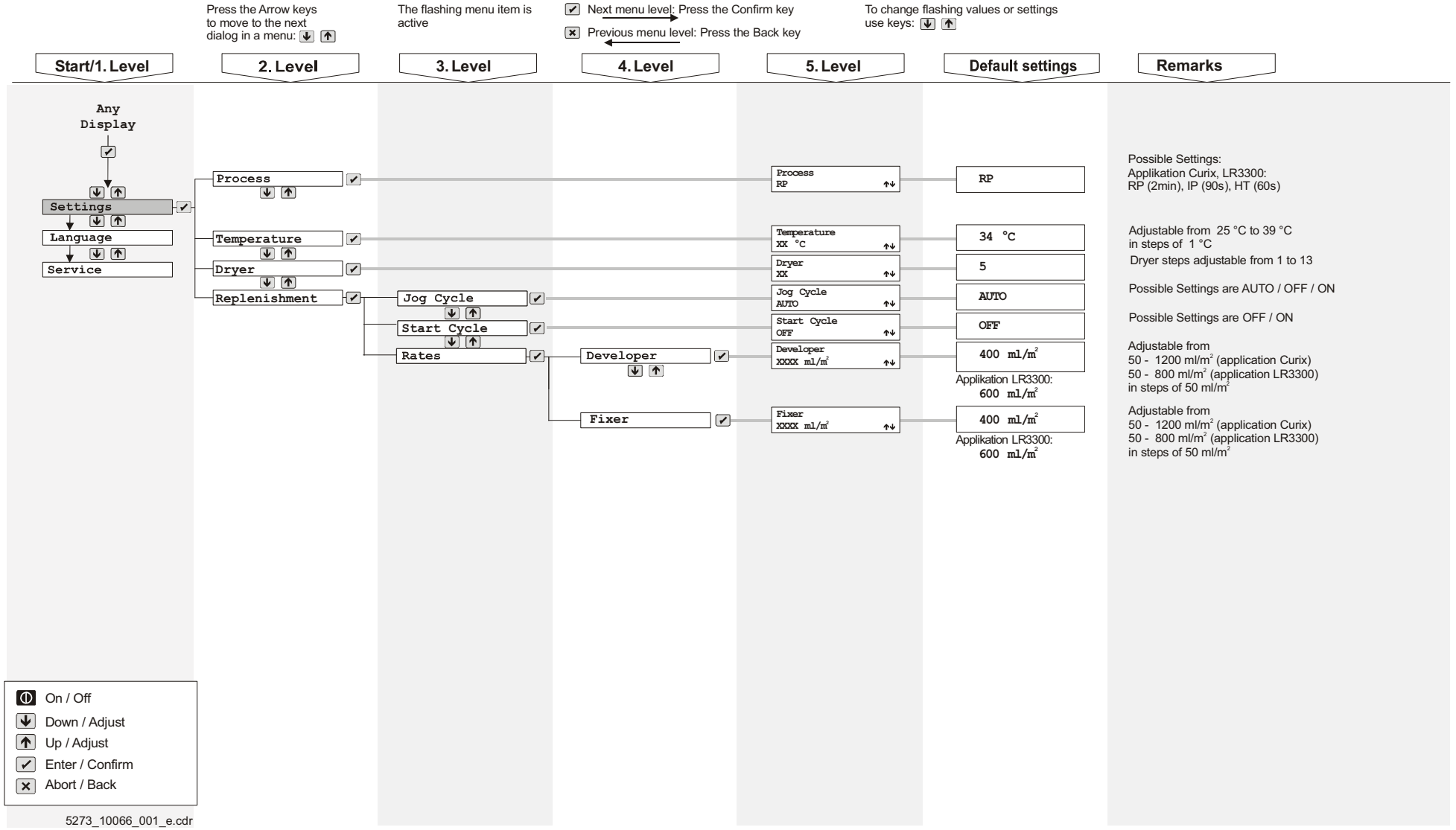

1.2 Infocounters

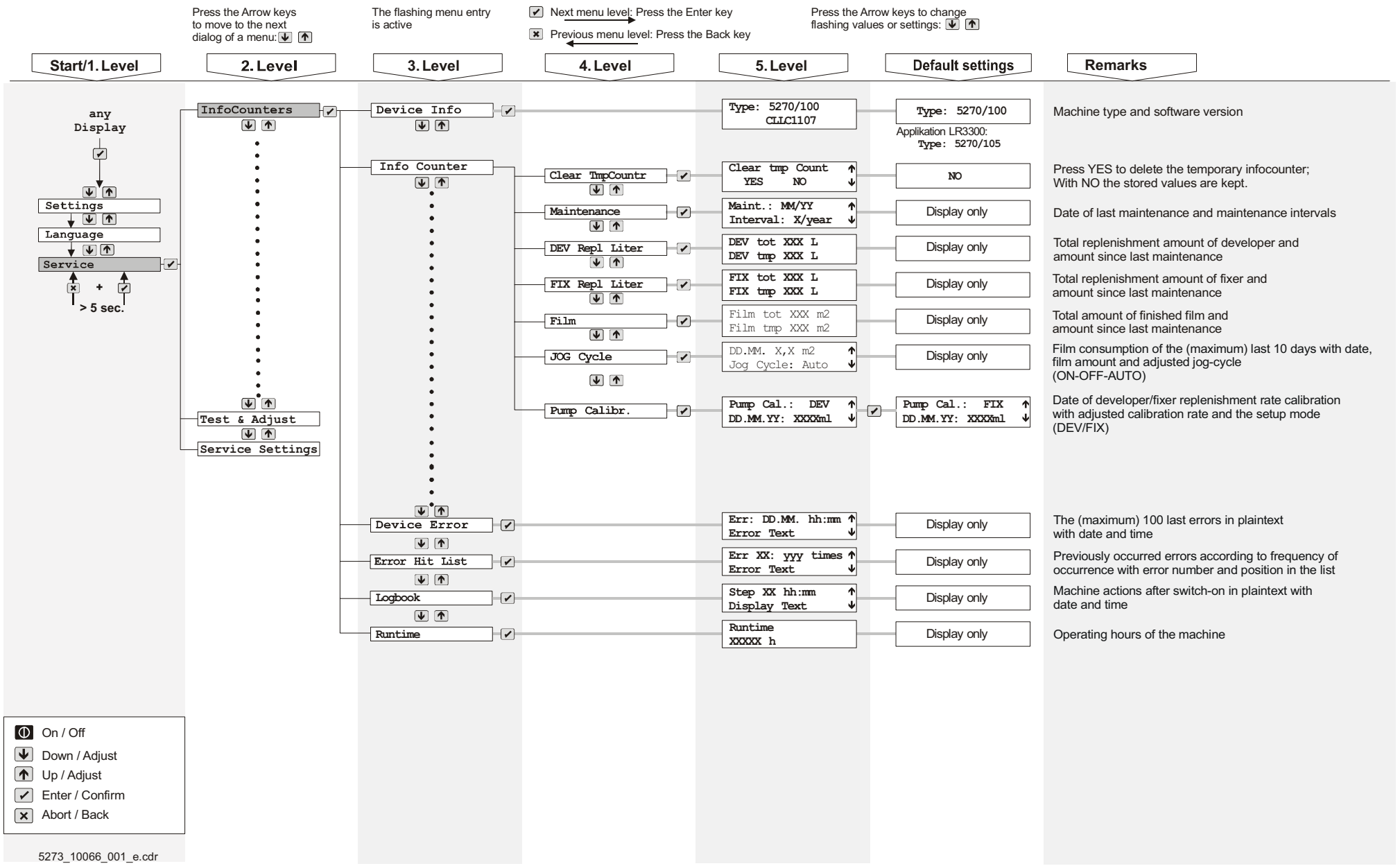

1.3 Test & Adjust

Menu Overview 1

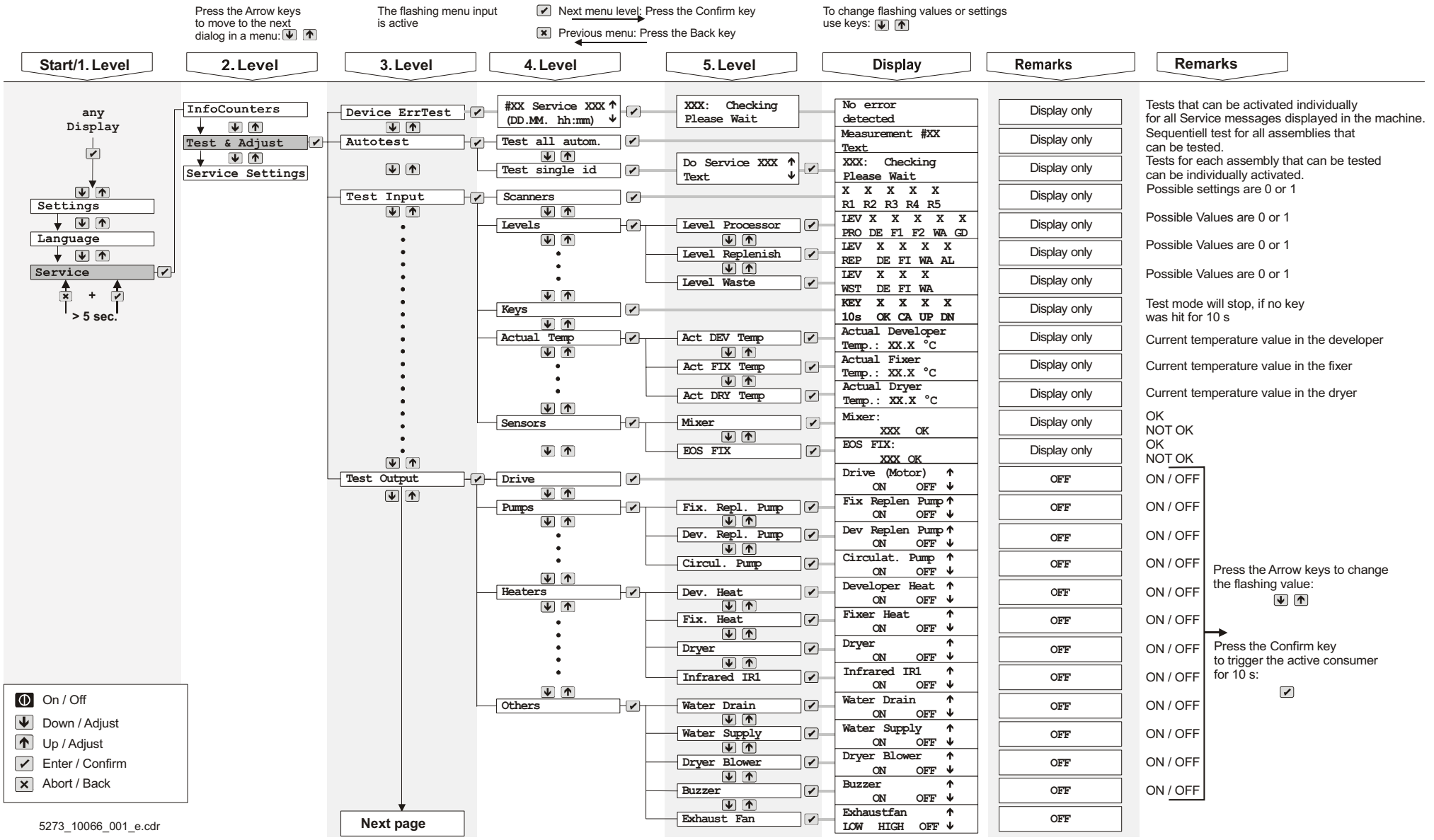

Test & Adjust
Menu Overview 2

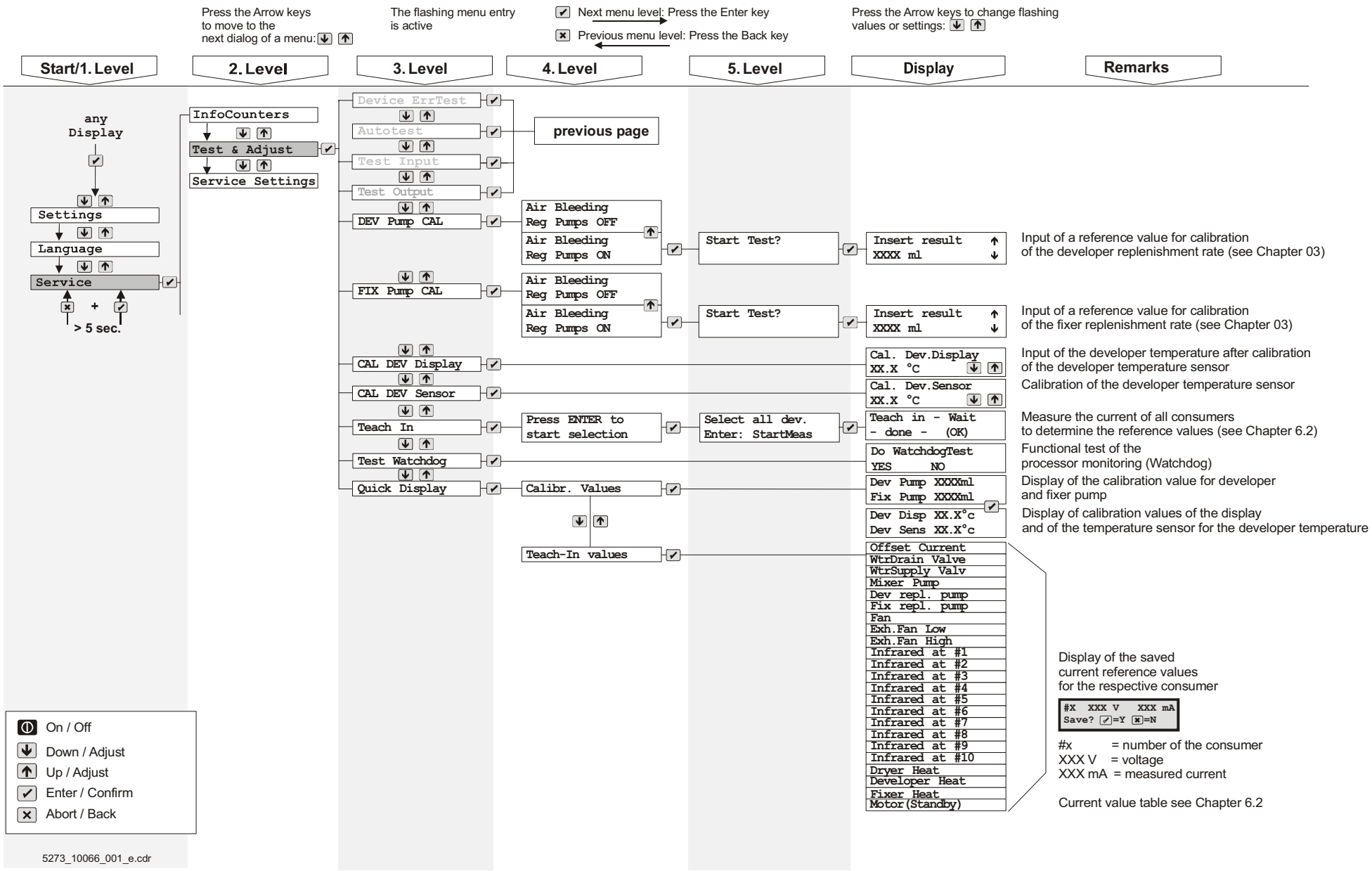

1.4 Service Settings

Menu Overview 1

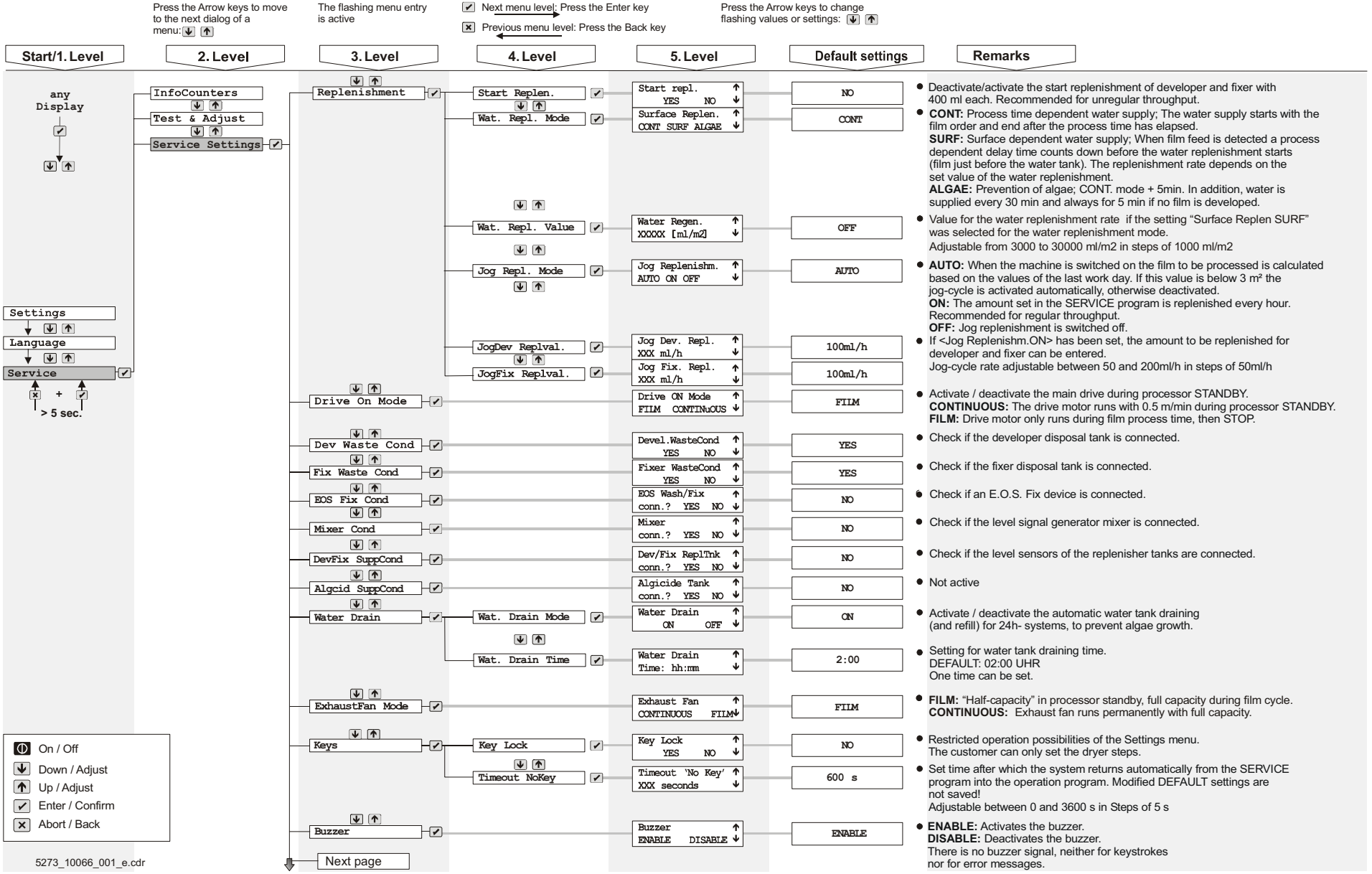

- Deactivate/activate the start replenishment of developer and fixer with 400 ml each. Recommended for unregular throughput.
- **CONT:** Process time dependent water supply; The water supply starts with the film order and end after the process time has elapsed.
  SURF: Surface dependent water supply; When film feed is detected a process dependent delay time counts down before the water replenishment starts (film just before the water tank). The replenishment rate depends on the set value of the water replenishment.
  ALGAE: Prevention of algae; CONT. mode + 5min. In addition, water is supplied every 30 min and always for 5 min if no film is developed.
- Value for the water replenishment rate if the setting "Surface Replen SURF" was selected for the water replenishment mode.
  Adjustable from 3000 to 30000 ml/m2 in steps of 1000 ml/m2
- **AUTO:** When the machine is switched on the film to be processed is calculated based on the values of the last work day. If this value is below 3 m² the jog-cycle is activated automatically, otherwise deactivated.
  ON: The amount set in the SERVICE program is replenished every hour. Recommended for regular throughput.
  OFF: Jog replenishment is switched off.
- If <Jog Replenishm.ON> has been set, the amount to be replenished for developer and fixer can be entered.
  Jog-cycle rate adjustable between 50 and 200ml/h in steps of 50ml/h
- Activate / deactivate the main drive during processor STANDBY.
  CONTINUOUS: The drive motor runs with 0.5 m/min during processor STANDBY.
  FILM: Drive motor only runs during film process time, then STOP.
- Check if the developer disposal tank is connected.
- Check if the fixer disposal tank is connected.
- Check if an E.O.S. Fix device is connected.
- Check if the level signal generator mixer is connected.
- Check if the level sensors of the replenisher tanks are connected.
- Not active
- Activate / deactivate the automatic water tank draining (and refill) for 24h- systems, to prevent algae growth.
- Setting for water tank draining time.
  DEFAULT: 02:00 UHR
  One time can be set.
- **FILM:** "Half-capacity" in processor standby, full capacity during film cycle.
  CONTINUOUS: Exhaust fan runs permanently with full capacity.
- Restricted operation possibilities of the Settings menu.
  The customer can only set the dryer steps.
- Set time after which the system returns automatically from the SERVICE program into the operation program. Modified DEFAULT settings are not saved!
  Adjustable between 0 and 3600 s in Steps of 5 s
- **ENABLE:** Activates the buzzer.
  DISABLE: Deactivates the buzzer.
  There is no buzzer signal, neither for keystrokes nor for error messages.

Service Settings
Menu Overview 2

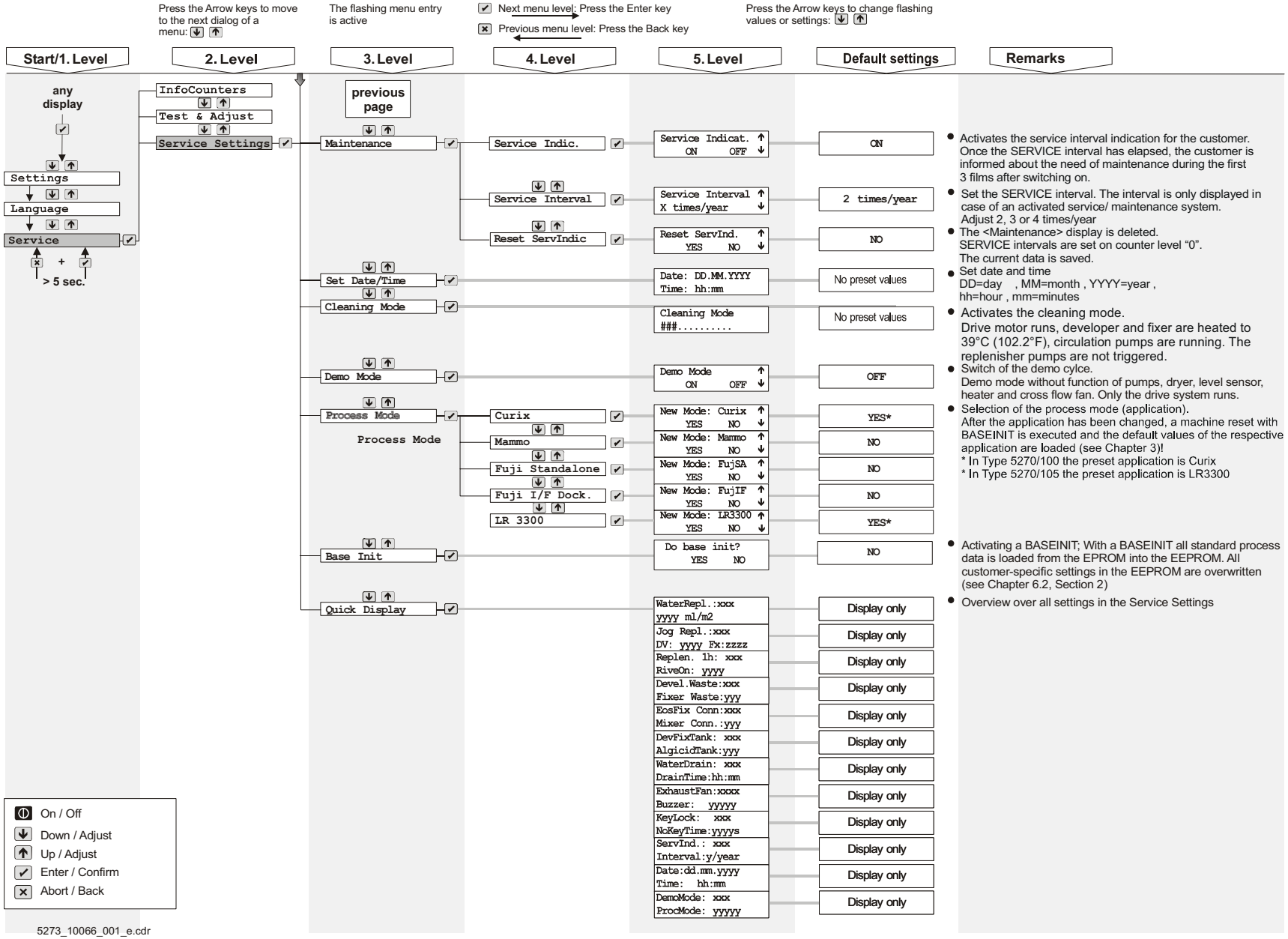

2 Default Settings after BASEINIT

2.1 Setup options depending on applications (process mode) Curix and LR3300

	SERVICE SETTINGS	DEFAULT settings	Possible settings	Meaning
1	Process settings (Menu `Settings→ Process`	`Process RP`	`Process RP` RP (2min) IP (90s) HT (60s)	

2a	Developer replenishment rate (Menu `Settings→ Replenishment→ Rates→ Developer`	`Developer 400 ml/m²`
		for Curix
		`Developer 600 ml/m²`
		for LR3300
			`Developer 400 ml/m²`
			Adjustable between 50 and 1200ml/m² (Curix) and 50 and 800ml/ m² (LR3300) in steps of 50ml/m²
				Application based

2b	Fixer replenishment rate (Menu `Settings→ Replenishment→ Rates→ Fixer`	`Fixer 400 ml/m²`
		for Curix
		`Fixer 600 ml/m²`
		for LR3300
			`Fixer 400 ml/m²`
			Adjustable between 50 and 1200ml/m² (Curix) and 50 and 800ml/ m² (LR3300) in steps of 50ml/m²
				Application based

3	Developer temperature (Menu `Settings→ Temperature`	`Temperature 34 °C` RP (2min): 34 °C IP (90s): 36°C HT (60s): 38°C	`Temperature 34 °C` 25°C – 38°C	Process based

	SERVICE SETTINGS	DEFAULT settings	Possible settings	Meaning
4	Dryer settings (Menu Settings→ Dryer	Dryer 5 RP (2min): 5 IP (90s): 5 HT (60s): 7	Dryer 5 1 - 13 dryer steps can be selected	Process based
5a	Start replenishment (Menu Service settings→ Replenishment→ Start Replen.)	Start repl. NO	Start repl. NO ↓↑ Start repl. YES	Deactivate the start replenishment of developer and fixer with 400 ml each Activate the start replenishment.
5b	Water replenishment (Menu Service settings → Replenishment → Wat. Repl. Mode)	Surface Replen. CONT	Surface Replen. CONT ↓↑ Surface Replen. SURF ↓↑ Surface Replen. ALGAE	**Process time dependent water supply:** The water supply starts with the film order and ends after the process time has elapsed. **Surface dependent water supply:** When film feed is detected a process dependent delay time counts down before the water replenishment starts (film just before the water tank). The replenishment rate depends on the adjusted value for the water replenishment (see 5c). **Prevention of algae:** Mode CONT. + 5min. In addition, water is supplied every 30 min and always for 5 min if no film is developed.

	SERVICE SETTINGS	DEFAULT settings	**Possible settings**	**Meaning**
5c	Setting the water replenishment rate ml/m² (Menu `Service settings→ Replenishment→ Water Repl. Value`)	**`Wat.Repl.Value 30000 ml/m²`**	**`Wat.Repl. Value 30000 ml/m²`** ⬇⬆ From 3000 - 30000 ml/m² adjustable in steps of 1000 ml/m²	Value for the water replenishment rate in `<Water Repl. Mode>`,if the setting `<Surface Replen SURF>` was selected.
5d	Jogcycle replenishment (Menu `Service settings→ Replenishment→ Jog Repl. Mode`)	**`Jog Replenishm Auto`**	**`Jog Replenishm. Auto`** ⬇⬆	When the machine is switched on, the value of film in m² processed on the previous day is evaluated. If this value is below 3 m² the jog-cycle is activated automatically, otherwise it is deactivated.
			`Jog Replenishm. ON` ⬇⬆	Every hour the rate set up in the SERVICE program (see 5e) is replenished.
			`Jog Replenishm. OFF`	Jog replenishment is switched off.
5e	Developer jogcycle rate (Menu `Service settings→ Replenishment →JogDev Replval.`)	**`Jog Dev Repl. 100 ml/h`**	**`Jog Dev Repl. Xxx ml/h`** From 50-200 ml/h in steps of 50 ml/h ⬇⬆	If `<Jog Replenishm. ON>` is set up, the rate to be replenished for developer and/or fixer can be entered.
	Fixer Jogcycle rate (Menu `Service settings→ Replenishment→ JogFix Replval.`)	**`Jog Fix Repl. 100 ml/h`**	**`Jog Fix Repl. Xxx ml/h`**	

	SERVICE SETTINGS	DEFAULT settings	Possible settings	Meaning
6	Motor drive during processor STANDBY (Menu Service settings→ Drive on Mode)	Drive ON Mode CONTINUOUS		Activate / deactivate the main drive during processor STANDBY
			Drive ON Mode CONTINUOUS	The drive motor runs with 0.5 m/min during processor STANDBY
			↓ ↑	
			Drive ON Mode FILM	Drive motor only runs during film process time, then STOP
7a	Level sensor of developer disposal tank connected? (Menu Service Settings→ Dev Waste Cond)	Devel.Waste cond Yes	Devel.Waste cond Yes	Check if the developer disposal tank is connected.
			↓ ↑	
			Devel.Waste cond No	
7b	Level sensor of fixer disposal tank connected? (Menu Service Settings→ Fix Waste Cond)	Fixer Waste conn? Yes	Fixer Waste conn? Yes	Check if the fixer disposal tank is connected.
			↓ ↑	
			Fixer Waste conn? No	
8	E.O.S. fix device connected? (Menu Service Settings→ EOS Fix Cond)	EOS Wash/Fix conn.? No	EOS Fix conn.? No	Check if an E.O.S. fix device is connected.
			↓ ↑	
			EOS Fix conn.? Yes	

	SERVICE SETTINGS	DEFAULT settings	Possible settings	Meaning
9	Level signal mixer connected? (Menu Service Settings→ Mixer Cond)	**Mixer conn.? No**	**Mixer conn.? No** ↓↑ **Mixer conn.? Yes**	Check if the level signal generator mixer is connected.
10	Level sensor supply tanks (Menu Service Settings→ DevFix SuppCond)	**Dev/Fix Repl Tnk conn.? No**	**Dev/Fix Repl Tnk conn.? No** ↓↑ **Dev/Fix Repl Tnk conn.? Yes**	Check if the level sensors of the replenisher tanks are connected.
11	Level sensor anti-algae tank (Menu Service Settings→ Algcid SuppCond)	**Algicide Tank conn.? No**	**Algicide Tank conn.? No**	Not active
12a	Automatic water tank drain due to algae (Menu Service Settings→ Water Drain→ Wat.Drain Mode)	**Water Drain On**	**Water Drain On** ↓↑ **Water Drain Off**	Activate / deactivate the automatic water tank draining (and refill) for 24 hour systems, to prevent algae growth.
12b	Setup of time for water tank draining (Menu Service Settings→ Water Drain→ Wat. Drain Time)	**Water Drain Time 2:00**	**Water Drain Time 2:00** ↓↑ **Water Drain Time hh:mm**	Setting for water tank draining time. • DEFAULT: 02:00 h • One time can be set.

	SERVICE SETTINGS	DEFAULT settings	Possible settings	Meaning
13	Function of the exhaust fan in processor standby (Menu Service Settings→ ExhaustFan Mode)	ExhaustFan FILM	ExhaustFan FILM ↓ ↑ ExhaustFan CONTINUOUS	FILM: "Half power" of the exhaust fan in processor STANDBY, full power during film cycle. CONTINUOUS: Exhaust fan runs permanently with full capacity.
14	Control panel lock (Menu Service Settings→ Keys→ Key Lock)	Key Lock NO	Key Lock NO ↓ ↑ Key Lock YES Adjustment range: 1- 13 dryer steps	Restricted operation possibilities of the Settings menu. The customer can only set the dryer steps.
15	Return to the operation program Timeout (Menu Service Settings→ Keys→ TimeoutNoKey)	Timeout NoKey 600 seconds	Timeout NoKey xxx seconds Adjustable from 0 s to 3600 s in steps of 5 s	Set time after which the system returns automatically from the SERVICE program into the operation program. Modified DEFAULT settings will not be saved.

	SERVICE SETTINGS	DEFAULT settings	Possible settings	Meaning
16	Buzzer (Menu `Service Settings→ Buzzer`)	**Buzzer ENABLE**	**Buzzer ENABLE** ⬇⬆ **Buzzer DISABLE**	Activates the buzzer. Deactivates the buzzer. Keystrokes or error messages will not come with an acoustic signal.
17a	Switch on service / maintenance indicator (Menu `Service Settings→ Maintenance→ Service Indic.`)	**ServiceIndicat. ON**	**ServiceIndicat. ON** ⬇⬆ **ServiceIndicat. OFF**	Activates the service interval indication for the customer. Once the SERVICE interval has elapsed, the customer is informed about the need of maintenance during the first 3 films after switching on. Deactivate.
17b	Set the SERVICE intervals per year (Menu `Service Settings→ Maintenance→ Service Interv.`)	**ServiceInterval 2 times/year**	**ServiceInterval 2 times/year** ⬇⬆ **ServiceInterval x times/year** Adjust 2, 3, or 4 times/year	Set the SERVICE interval. The interval is only displayed in case of an activated service system.

	SERVICE SETTINGS	DEFAULT settings	Possible settings	Meaning

18	Simulation (demo) of film processor (Menu `Service Settings→Demo Mode`)	`Demo Mode`
		`OFF`
			`Demo Mode`
			`OFF`
			⬇⬆
			`Demo Mode`
			`ON`
				Switch off demo mode.
				
				Demo mode without function of pumps, dryer, level sensors, heater and cross-flow fan. Only the drive system runs.

19	Machine type and software information (Menu `Info Counters→ Device Info`)	`Type:5270/100`
		`xxx`
			`Type:5270/100`
			`CLLC1107`
			⬇⬆
			`Type:5270/105`
			`CLLC1107`
				Adjust machine type and software.

2.2 Exception:

The following values will only be overwritten if they caused a plausibility violation in the EEPROM (see Chapter 3):

	Menu	Default settings	Possible settings	Meaning
1	Calibration of developer / fixer replenishment rate (Menu `Test&Adjust? DEV/FIX Pump CAL`)	`Cal Dev Pump goto Test/Adjust`	`Insert result 75ml` (for example) Adjustable in steps of 5 ml	The replenishment rate developer / fixer is not preset and must be calibrated (see Chapter 3)
2	Language setting (Menu `Language`)	`ENGLISH`	`ENGLISH` (for example)	Language setting for the User menu, available options: English, Portuguese, German, Danish, Dutch, Norwegian, French, Finnish, Spanish, Swedish, Italian, Greek
3	Process mode (Menu `Service Settings? Process Mode`)	`Curix`	`New Mode:Curix Yes No` The applications CURIX, MAMMO, FUJI-STANDALONE, FUJI- I/F DOCKING and LR3300 can be selected	Selection of an application. After the application has been changed the machine is reset automatically with a BASEINIT.
4	Calibration of the developer temperature sensor (Menu `Test & adjust ? CAL DEV Sensor`)	`CAL.DEV.Sensor 0.0°C`	`CAL.DEV.Sensor +0.5°C` (for example)	By means of this function the developer temperature offset can be corrected by +/-1°C in steps of 0.1°C.

Chapter 6.7

Contents

1 Determining the Order Numbers of Control Board and Software 1

2 Introduction of Processor Software CLLC_1203 3

3 Introduction of Processor Software CLLC_1301 3

Printed copies of this document are not controlled.
The reader should always refer to MedNet to ensure that they are working with the latest copy of the document.

Printed copies of this document are not controlled.
The reader should always refer to MedNet to ensure that they are working with the latest copy of the document.

1 Determining the Order Numbers of Control Board and Software

Types	Serial No.	Characteristics Control Panel	Control Board	Spare Parts Name	Order Number
5270/100	< 2200	3 Keys	GS1 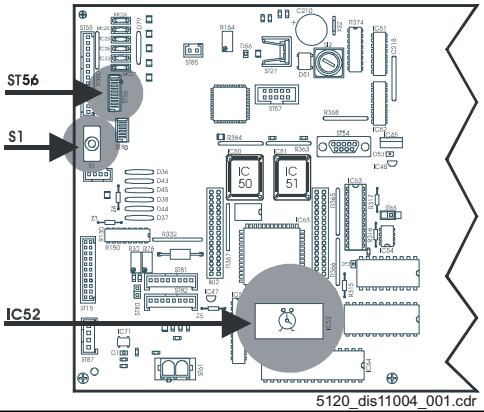 5120_dis11004_001.cdr	Processor Software EOSU1102 or successor	CM+9.5270.9350.4
5270/100 5270/105 5272/100	2200 – 4499 < 1138 < 1500	4 Keys		Control Board Compact / Solo E.O.S. Contains processor control board GS1 and compatible software for film handling and processor modules.	CM+9.5270.7960.1
5270/100 5270/105 5272/100	≥ 4500 ≥ 1138 ≥ 1500	4 Keys	PCB1 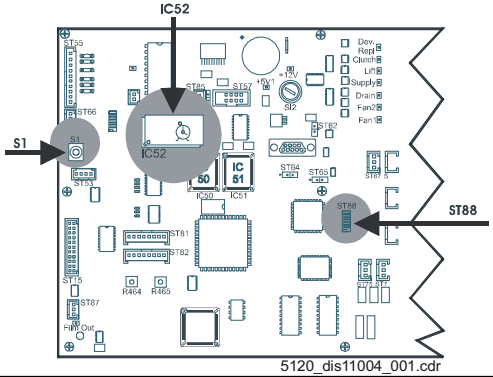 5120_dis11004_001.cdr	Processor Software CLLC1301 or successor	CM+9.5270.9410.3
				Shielding Box + Control Board CL/LC + PLD Contains processor software. Sensing of level in second fixer bath is supported. If required, build in level sensor (CM+9.5270.9160.0) and connect to control board, plug ST76	CM+9.5270.9450.2

Distinctive features:

- S1: Reset switch – modified layout
- IC52: Clock chip – modified position
- ST56 = ST88: plug-in connection – modified position and name

Order Numbers in April, 2005
Order these or current successors.

Printed copies of this document are not controlled.
The reader should always refer to MedNet to ensure that they are working with the latest copy of the document.

Printed copies of this document are not controlled.
The reader should always refer to MedNet to ensure that they are working with the latest copy of the document.

2 Introduction of Processor Software CLLC_1203

Description:
The introduction of Processor Software CLLC_1203 solves dryer problems.

3 Introduction of Processor Software CLLC_1301

Description:
The introduction of Processor Software CLLC_1301 solves problems in interfacing the processor with Siemens Thoramat.

Printed copies of this document are not controlled.
The reader should always refer to MedNet to ensure that they are working with the latest copy of the document.

Reference and Circuit Diagrams

7

Section 7

contains:

- An alphanumeric reference list
- Reference diagrams for the identification and location of assemblies in the machine
- Block diagrams

Chapter 7

Contents

1 Abbreviations and Short Terms 1

2 Control Board PCB1 2

2.1 Control Board PCB1 (fuses, potentiometers, switches) 2

2.2 Control Board PCB1 (LED, IC, XK1) 4

2.3 Control Board PCB1 (plugs, sockets) 6

3 Reference Diagrams 8

3.1 Machine front view 8

3.2 Machine side view, right 8

3.3 Machine side view, left 9

3.4 Machine top view 10

3.5 Dryer 11

3.6 Current Sensor Board PCB2 12

Appendix:

A Complete Diagram

B Overview Control Board PCB1

1 Abbreviations and Short Terms

Code	Designation
PCB1	Control Board
0BE1	Thermal cutout developer heater
0BE2	Thermal cutout fixer 2 heater
0FI	GFI switch
0HEAT1	Dryer convection heater
0HEAT2	Heater fixer 2
0HEAT3	Heater developer
0IR1	Dryer infrared heater
0M1	Dryer fan 1
0M2	Drive motor
0M4	Synchro-motor water circulation pump (option)
0M5	Synchro-motor fixer 2 circulation pump
0M6	Synchro-motor fixer 1 circulation pump
0M7	Synchro-motor developer circulation pump
0MC1	Interference suppression filter
0SW1	Mains switch
0SW2	Safety switch (dryer flap)
0SW3	Safety switch (cover)
0Si_HEAT1	Thermal cutout dryer convection heater
0Si_IR1	Thermal cutout dryer infrared heater
0TR1	Transformer
0XK1	Terminal strip

Code	Designation
1HEAT1	Dryer convection heater
1IR1	Dryer infrared heater
1M1	Dryer fan 2
1M2	Exhaust fan
1Si_HEAT1	Thermal cutout dryer convection heater
2M1	Developer replenisher pump
2M2	Fixer replenisher pump
2MG1	Water supply solenoid valve
2MG2	Solenoid valve water drain
3S1 - 3S5	Film detection scanning rollers

0 / no prefix = main frame
1 = dryer flap
2 = base
3 = darkroom feed table

Code	Designation
LEV_1	Level sensor developer
LEV_2	Level sensor fixer 1
LEV_3	Level sensor fixer 2
LEV_4	Level sensor water
SENS1	Developer temperature sensor
SENS2	Fixer 2 temperature sensor
SENS3	Dryer temperature sensor

2 Control Board PCB1

2.1 Control Board PCB1 (fuses, potentiometers, switches)

Fuse	Value	Description
SI1	1.0 A slow	Dryer fan 0M1 / 1M1 Replenisher pumps dev 2M1 / fix 2M2
SI2	1.25 A slow	+12V V2 DC
SI3	10 A slow	Dryer convection heater 0HEAT1 / 1HEAT1
SI5	6.25 A slow	Dryer infrared heater 0IR1 / 1IR1
SI6	6.25 A slow	Developer heater 0HEAT3
SI7	6.25 A slow	Fixer 2 heater 0HEAT2
SI8	6.25 A slow	+24V DC
SI9	6.25 A slow	+24V1 / +24V2 / +42V DC
SI10	10 A slow	230 VAC mains supply primary side
SI11	10 A slow	208 VAC mains supply primary side
SI12	10 A slow	200 VAC mains supply primary side

Pot	Description
R464	Display brightness
R465	Display contrast
R466	Buzzer volume

Switches	Description
S1	Reset

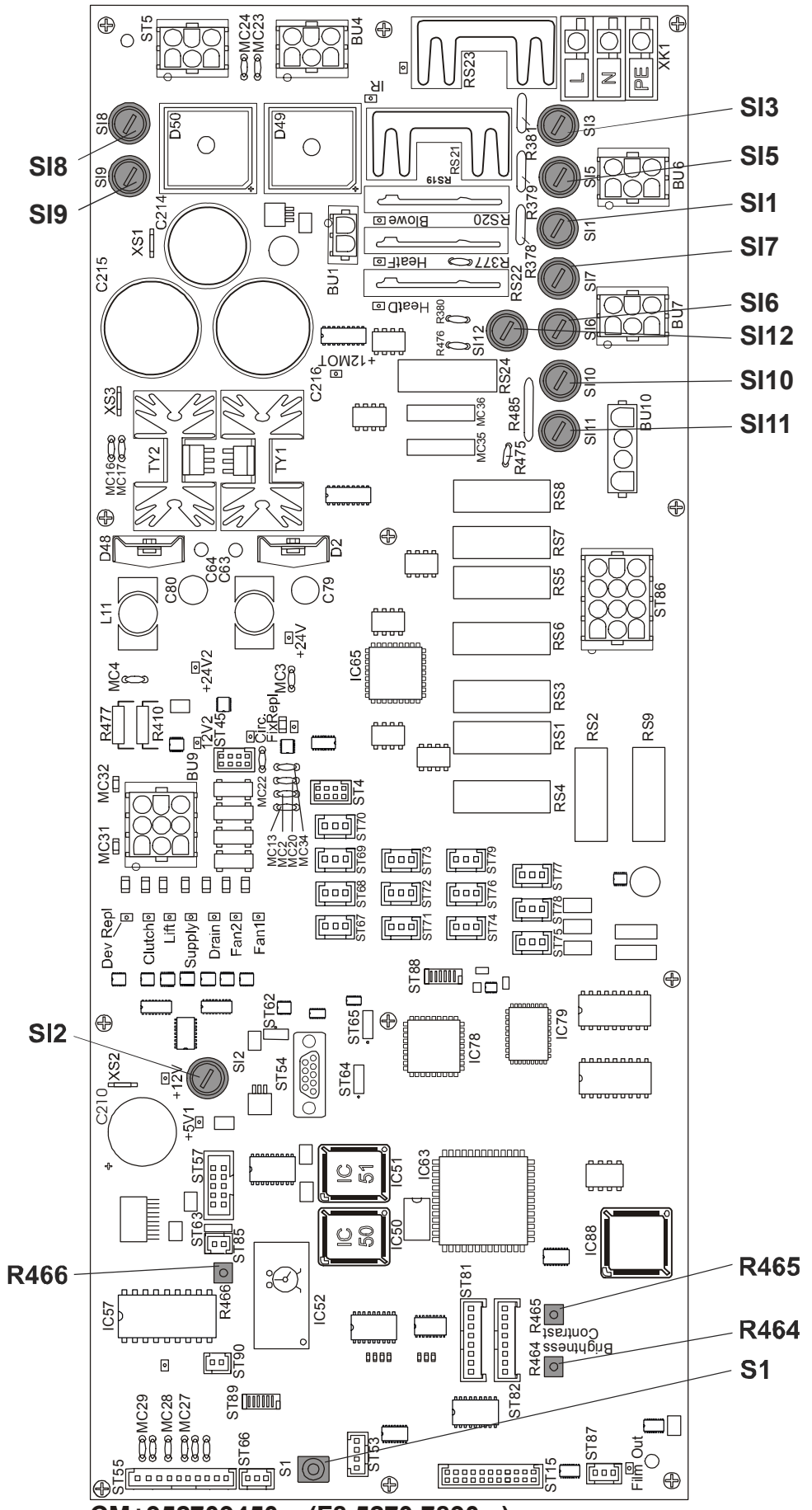

CM+952709450_ (F8.5270.7890._) 5273_10007_001.CDR

Figure 1

2.2 Control Board PCB1 (LED, IC, XK1)

LED		Description
D21	+24V	+24V DC supply Circulation pumps Replenisher pumps 2M3/2M4 (only for Type 5270/105)
D23	+24V2	+24V DC supply Solenoid valves water supply / drain Exhaust fan
D53	+5V	+5V DC supply display and control panel
D54	+12MOT	Main drive speed monitoring
D55	Circ	TS30 circulation pumps 0M4 (W)(option) / 0M5 (F2) / 0M6 (F1) / 0M7 (E)
D56	+12V	+12V DC supply
D57	DevRepl	TS31 developer replenisher pump 2M1
D58	Clutch	n/a
D59	Lift	n/a
D60	Supply	TS35 water supply solenoid valve 2MG1
D61	Drain	TS36 solenoid valve water drain 2MG2
D62	Fan2	TS37 exhaust fan 1M2 full power
D63	Fan1	TS38 exhaust fan 1M2 half power
D64	HeatF	RS20 fixer 2 heater 0HEAT2
D65	Blowe	RS19 dryer fans 0M1 / 1M1
D66	IR	RS21 dryer infrared heater 0IR1 / 1IR1
D67	HeatD	RS developer heater 0HEAT3
D70		RS23 dryer convection heater 0HEAT1 / 1HEAT1
D167	+12V2	+12V2 DC supply
D172	FixRepl	TS33 fixer replenisher pump 2M2
D174	FilmOut	Film transport sensor (only for Type 5270/105)

IC	Description
IC50	Eprom for machine software
IC51	Eprom for machine software
IC52	Clock chip
IC88	GAL
IC79	EEprom

Power Strip	Description
XK1	Terminal strip

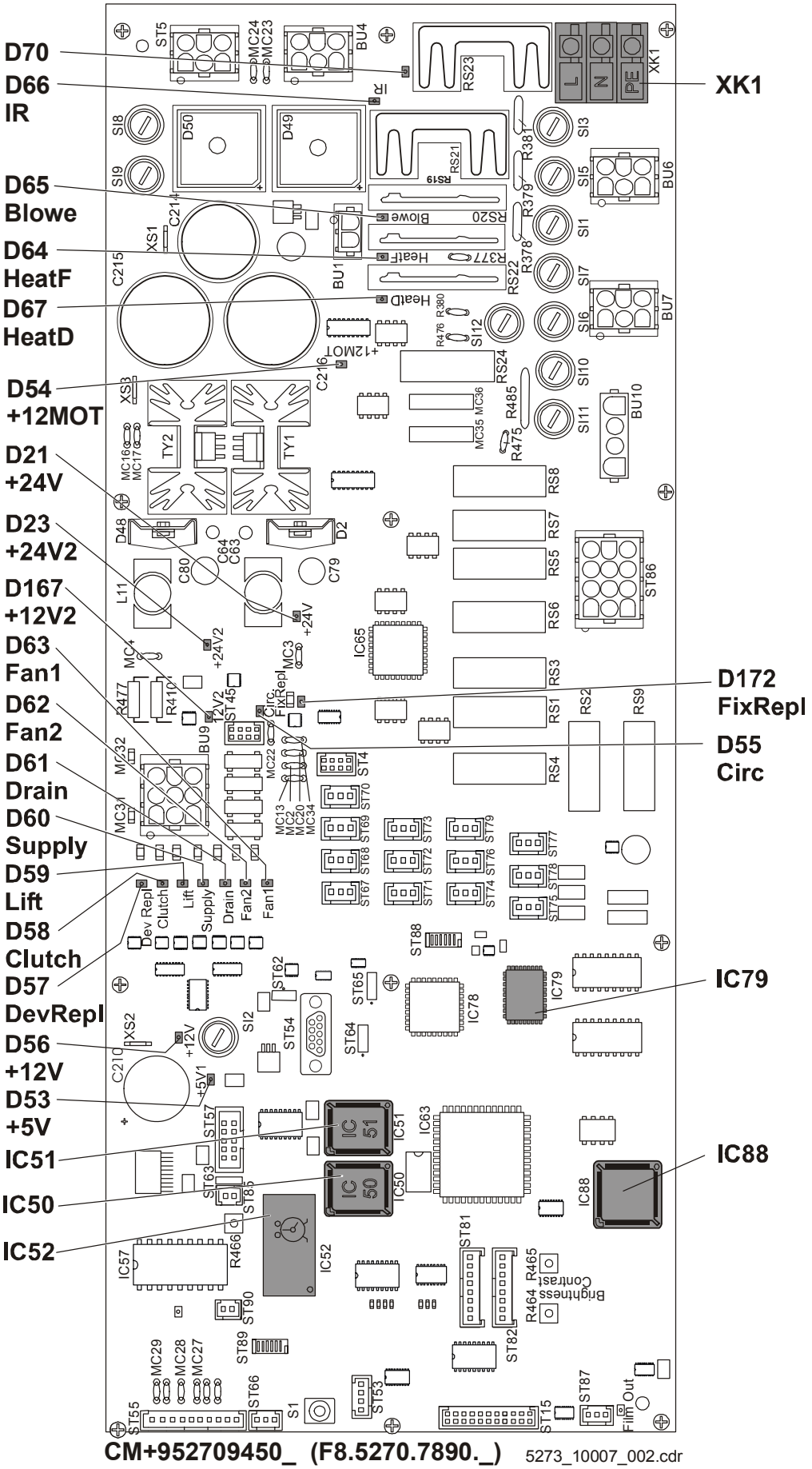
D70
D66
IR
D65
Blowe
D64
HeatF
D67
HeatD
D54
+12MOT
D21
+24V
D23
+24V2
D167
+12V2
D63
Fan1
D62
Fan2
D61
Drain
D60
Supply
D59
Lift
D58
Clutch
D57
DevRepl
D56
+12V
D53
+5V
IC51
IC50
IC52
XK1
D172
FixRepl
D55
Circ
IC79
IC88
CM+952709450_ (F8.5270.7890._)
5273_10007_002.cdr

Figure 2

2.3 Control Board PCB1 (plugs, sockets)

Plug	Description
ST4	Replenisher pumps 2M3 / 2M4 (only for Type 5270/105)
ST5	Transformer 0TR1 (15 / 21 / 30 VAC)
ST15	LCD display
ST45	Circulation pumps 0M4 (W)(option)/0M5 (F2)/0M6 (F1)/0M7 (D)
ST53	Current Sensor Board PCB2
ST54	BOOT / OMT
ST55	Scanning rollers film detection 3S1 / 3S2 / 3S3 / 3S4 / 3S5
ST66	Mixer level
ST67	Developer level LEV_1
ST68	Fixer level 1 LEV_2
ST69	Water level LEV_4
ST71	Developer supply level
ST72	Fixer supply level
ST73	Developer disposal level
ST74	Fixer disposal level
ST75	Developer temperature SENS1
ST76	Fixer 2 level LEV_3
ST77	Dryer temperature SENS3
ST78	Fixer 2 temperature SENS2
ST79	Anti-algae supply level
ST81	RS232 interface RK 188pro (only for Type 5270/105)
ST85	Buzzer
ST86	Transformer
ST87	Film transport sensor (only for Type 5270/105)
ST90	E.O.S. Wash / Fix (silver recovery unit)

ST57, ST62, ST63, ST64, ST65, ST70, ST82, ST88, ST89 open

Socket	Description
BU1	n/a
BU4	+24V DC drive motor 0M2
BU6	Dryer infrared heater 0IR1 / 1IR1 Dryer convection heater 0HEAT1 / 1HEAT1 / 0M1 / 1M1 Dryer fan 0M1 / 1M1
BU7	Dryer convection heater 0HEAT1 / 1HEAT1 Developer heater 0HEAT3 Fixer 2 heater 0HEAT2
BU9	Exhaust fan 1M2, water supply solenoid valve 2MG1, water drain solenoid valve 2MG2
B10	Replenisher pumps 2M1 / 2M2 (only for Type 5270/100)

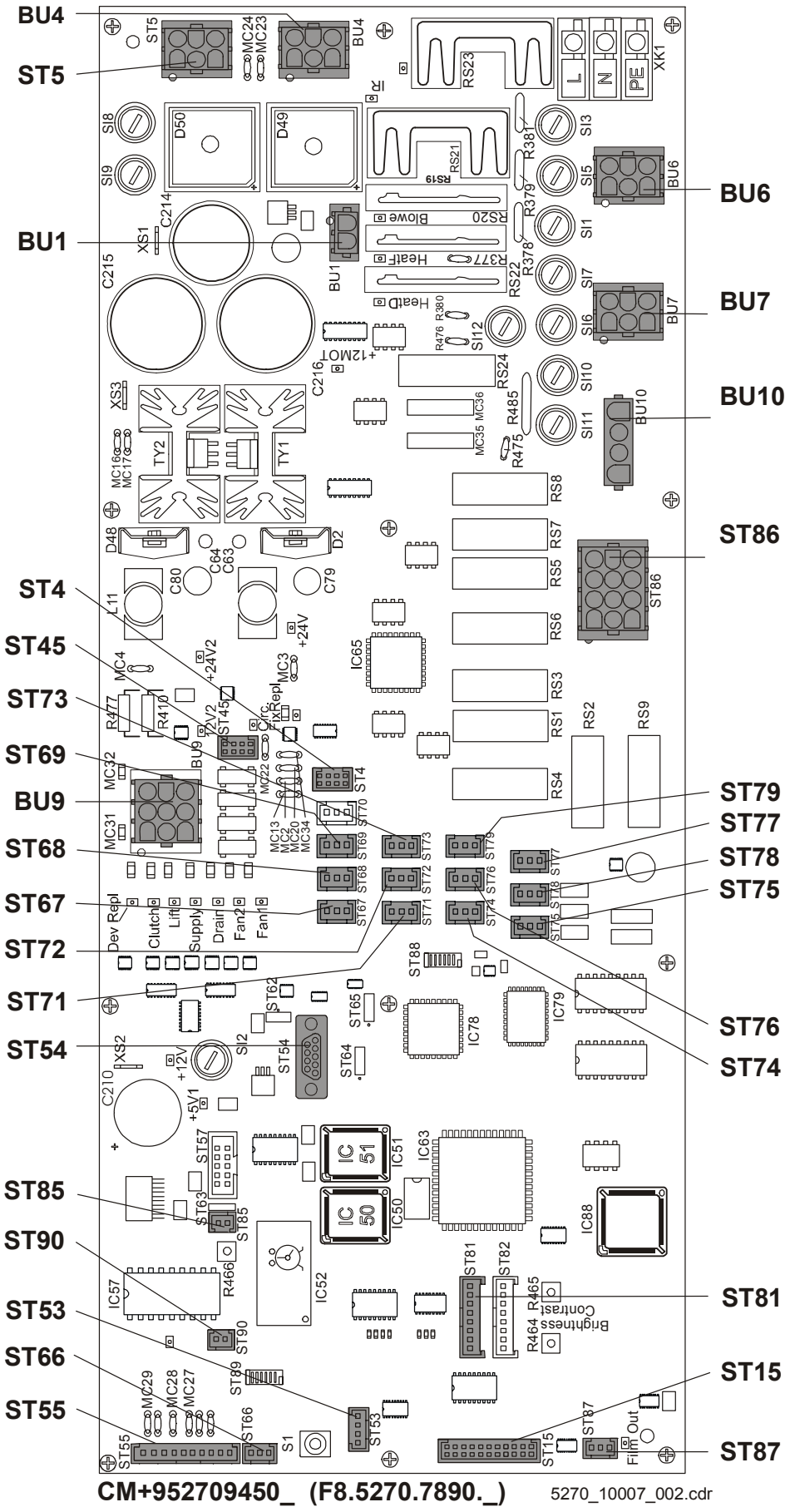
BU4
ST5
BU1
ST4
ST45
ST73
ST69
BU9
ST68
ST67
ST72
ST71
ST54
ST85
ST90
ST53
ST66
ST55
BU6
BU7
BU10
ST86
ST79
ST77
ST78
ST75
ST76
ST74
ST81
ST15
ST87
CM+952709450_ (F8.5270.7890._)
5270_10007_002.cdr

Figure 3

3 Reference Diagrams

3.1 Machine front view

1	Control panel (display)
2	Water supply solenoid valve 2MG1
3	Fixer replenisher pump 2M2
4	Developer replenisher pump 2M1

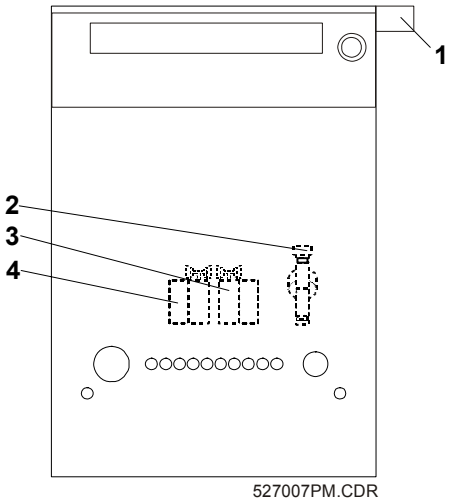

Figure 4

3.2 Machine side view, right

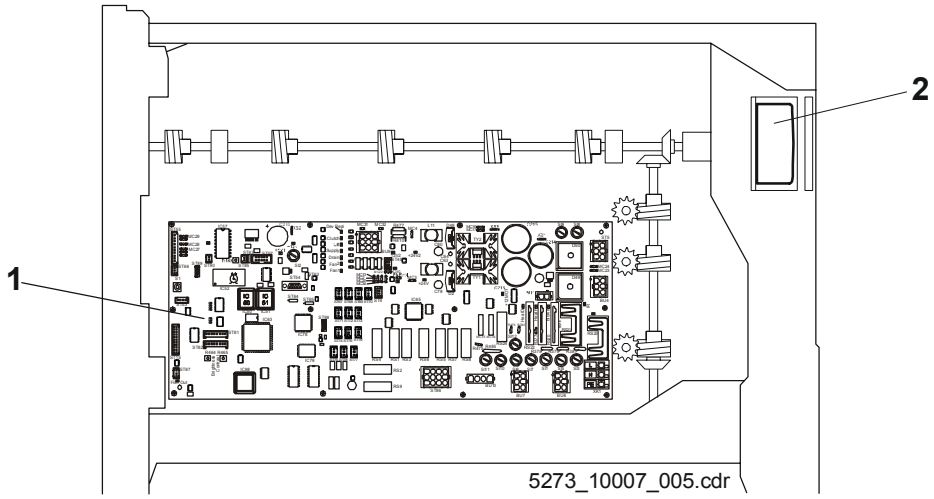

Figure 5

1	PCB1	Control Board
2	0M2	Drive motor

3.3 Machine side view, left

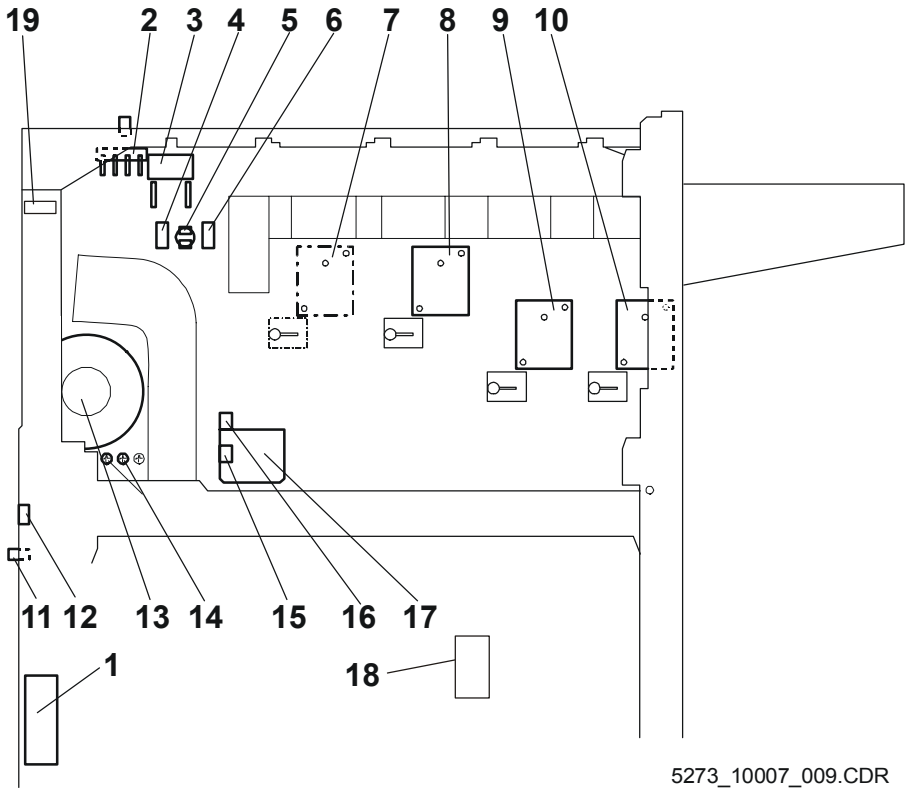

Figure 6

1	0MC1	Interference suppression filter	11	0FI	GFI switch
2	0XK1	Terminal strip	12	0SW1	Mains switch
3	0BE1 0BE2	Thermal cutout developer heater Thermal cutout fixer 2 heater	13	0TR1	Transformer
4	1IR1	Dryer infrared heater	14	PE PE1	Protective earth connection
5	0Si_IR1	Thermal cutout infrared dryer heater	15	0HEAT1	Dryer convection heater
6	0IR1	Dryer infrared heater	16	0Si_HEAT1	Thermal cutout dryer convection heater
7	0M4	Water circulation pump (option)	17	0M1	Dryer fan 1
8	0M5	Fixer 2 circulation pump	18	2MG2	Solenoid valve water drain
9	0M6	Fixer 1 circulation pump	19	PCB2	Current Sensor Board
10	0M7	Developer circulation pump			

3.4 Machine top view

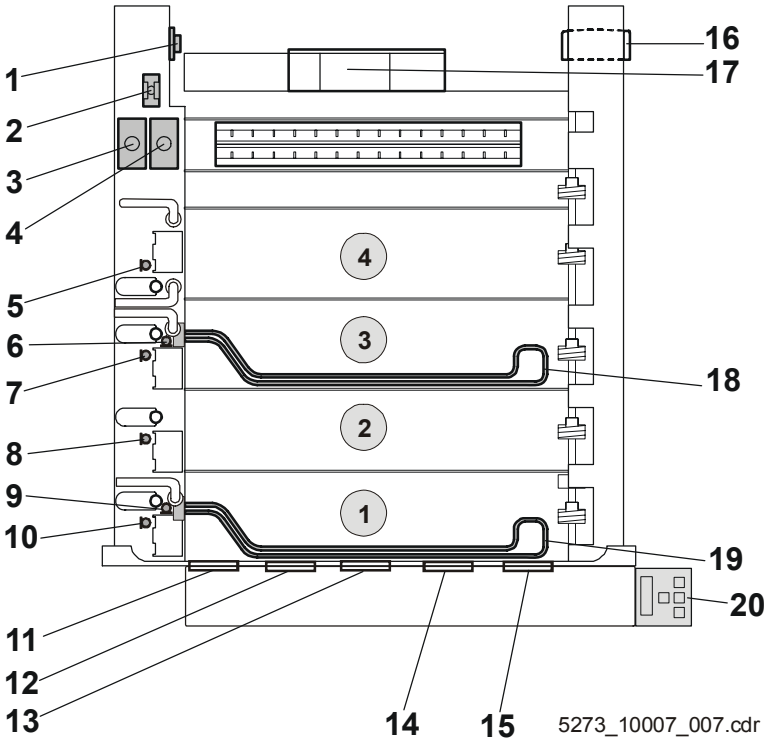

Figure 7

1 Developer 2 Fixer 1 3 Fixer 2 4 Water

1	0SW2	Safety switch (dryer flap)	11	3S5	Film detection roller
2	0SW3	Safety switch (cover)	12	3S4	Film detection roller
3	0BE2	Thermal cutout fixer 2 heater	13	3S3	Film detection roller
4	0BE1	Thermal cutout dev. heater	14	3S2	Film detection roller
5	LEV_4	Level sensor water	15	3S1	Film detection roller
6	SENS2	Fixer 2 temperature sensor	16	0M2	Drive motor
7	LEV_3	Level sensor fixer 2	17	1M2	Exhaust fan
8	LEV_2	Level sensor fixer 1	18	0HEAT2	Heater fixer 2
9	SENS1	Developer temperature sensor	19	0HEAT3	Heater developer
10	LEV_1	Level sensor developer	20		Control panel (display)

3.5 Dryer

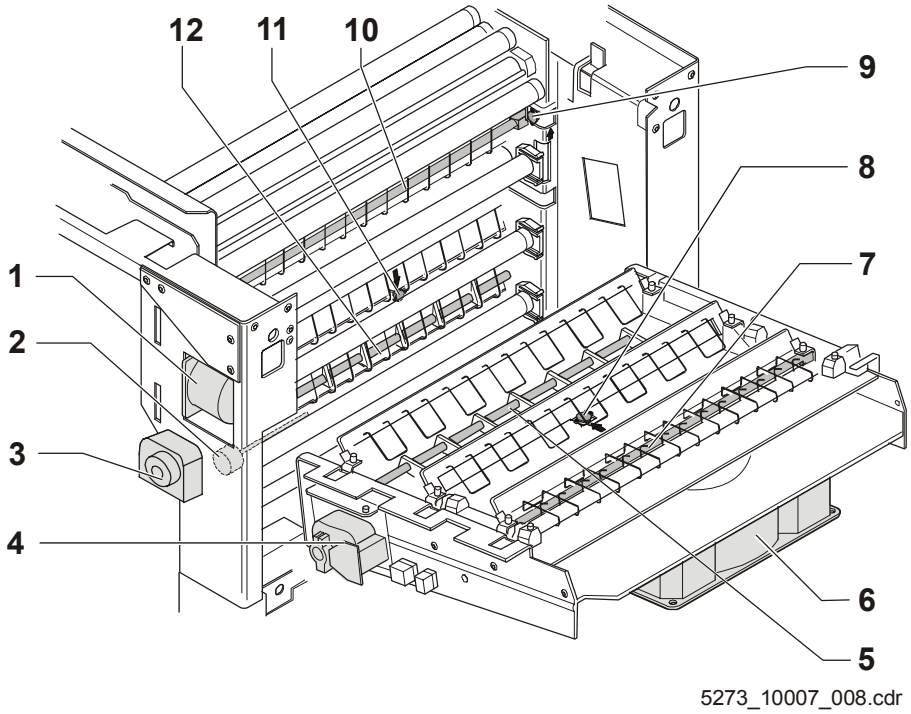

Figure 8

1	0M2	Drive motor
2	SENS3	Dryer temperature sensor
3	0M1	Dryer fan 1
4	1M1	Dryer fan 2
5	1HEAT1	Dryer convection heater
6	1M2	Exhaust fan
7	1IR1	Dryer infrared heater
8	1Si_HEAT1	Thermal cutout dryer convection heater
9	0Si_IR1	Thermal cutout dryer infrared heater
10	0IR1	Dryer infrared heater
11	0Si_HEAT1	Thermal cutout dryer convection heater
12	0HEAT1	Dryer convection heater

3.6 Current Sensor Board PCB2

1	LED D3
2	LED D12
3	Plug ST2

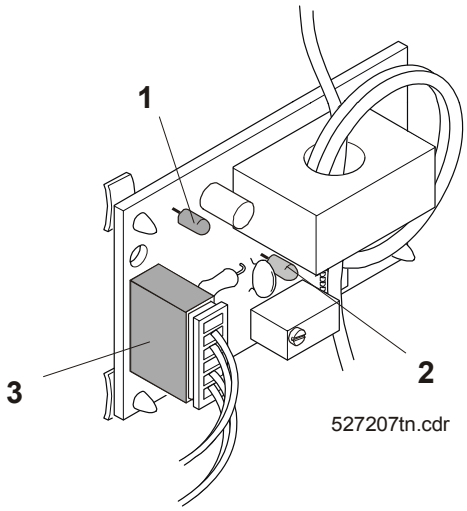

Figure 9

Component	Description
D3	+5 V power supply
D12	-5 V power supply
ST2	Power connection and signal forwarding to Control Board PCB1

Appendix

A Complete Diagram F1.5272.7005.0

B Overview Control Board PCB1 (CM+952709450_ / F8.5270.7890._)

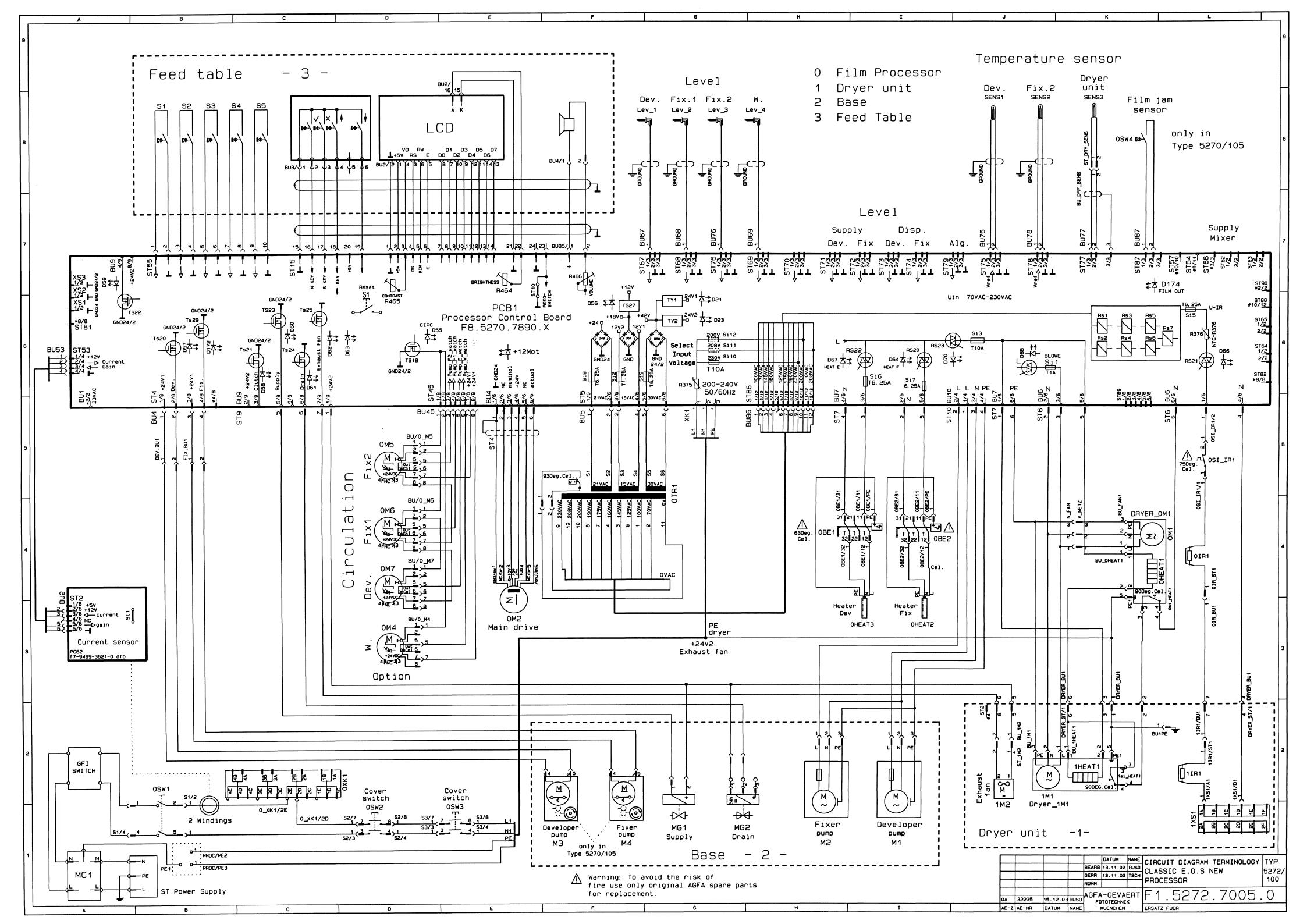

					DATUM	NAME	CIRCUIT DIAGRAM TERMINOLOGY CLASSIC E.O.S NEW PROCESSOR	TYP 5272/100
				BEARB	13.11.02	RUSO		
				GEPR	13.11.02	TSCH		
				NORM				
							AGFA-GEVAERT FOTOTECHNIK MUENCHEN	F1.5272.7005.0
OA	32235	15.12.03	RUSO					
AE-Z	AE-NR	DATUM	NAME				ERSATZ FUER	

DD+FUJ078.03E

F7.5270.1106.0
No. only needed for production purpose

12/2003

WARNING

for continued protection against fire hazard, replace only with the same type and rating of fuse.

Fuse	Value	Description
SI 1	1.0 A slow blow	Dryer Fan, Replenishment Pumps (only Types 5273,5272, 5270/100)
SI 2	1.25 A slow blow	+12 V2 DC
SI 3	10 A slow blow	Heaters Dryer Convection 0HEAT1 / 1HEAT1
SI 5	6.25 A slow blow	Heaters Dryer IR-Radiator 0IR1 / 1IR1
SI 6	6.25 A slow blow	Heater Developer 0HEAT3
SI 7	6.25 A slow blow	Heater Fixer 0HEAT2
SI 8	6.25 A slow blow	+24 V DC
SI 9	6.25 A slow blow	+24V1 / +24V2 / +42 V DC
SI 10	10 A slow blow	Main Connection from Power Unit: Power Supply 230 VAC
SI 11	10 A slow blow	Main Connection from Power Unit: Power Supply 208 VAC
SI 12	10 A slow blow	Main Connection from Power Unit: Power Supply 200 VAC

Pot.	Description
R464	Display Brightness
R465	Display Contrast
R466	Buzzer Volume

Switch	Description
S1	Reset

IC	Description
IC50	EPROM for Device SW
IC51	EPROM for Device SW
IC52	Clock Modul

Plugs	Description
BU1	PCB518 Demagn. of Clutch (only Type 5120)
BU4/1,4	+24 V DC Main Drive 0M2
BU4/3,6	Control Terminal of Main Drive 0M2
BU6/1,4	Heaters Dryer IR-Radiator 0IR1 / 1IR1
BU6/5	Heaters Dryer Convection 0HEAT1 / 1HEAT1
BU6/2,3	Dryer Fans 0M1 / 1M1
BU7/1	Heaters Dryer Convection 0HEAT1 / 1HEAT1
BU7/3,4	Heater Developer 0HEAT3
BU7/2,5	Heater Fixer 0HEAT2
BU9/2,3	Clutch 500MG2
BU9/4,8	Feed-Table:Cover-Release (only Type 5120)
BU9/1,7	Exhaust Fan 1M2
BU9/1,5	Solenoid Valve Supply Water
BU9/1,6	Solenoid Valve Drain Water
BU10/1,3	Replenishment Pump Developer (only for 5273, 5272, 5270/100)
BU10/2,3	Replenishment Pump Fixer (only for 5273, 5272, 5270/100)
XK1	Mains (L=brown / N=blue)
ST4/1,2	Replenishment Pump Developer (only Types 5270/105, 5120)
ST4/3,4	Replenishment Pump Fixer (only Types 5270/105, 5120)
ST5	Transformer 0TR1 (15 / 21 / 30 VAC)
ST15	Feed-Table
ST45	Circulation Pumps

Plugs	Description
ST53	Current Sensor PCB2
ST55	Scanner Rollers
ST66	Level Mixer (only Types 5270, 5272, 5273)
ST67	Level Developer LEV_1
ST68	Level Fixer 1 LEV_2
ST69	Level Water LEV_4
ST70	Level bottom tray (only Type 5120)
ST71	Level Supply Developer (only Types 5270, 5272, 5273)
ST72	Level Supply Fixer (only Types 5270, 5272, 5273)
ST73	Level Disposal Developer (only Types 5270, 5272, 5273)
ST74	Level Disposal Fixer (only Types 5270,5272,5273)
ST75	Temperature Developer SENS1
ST76	Level Fixer 2 LEV_3
ST77	Temperature Dryer SENS3
ST78	Temperature Fixer 2 SENS2
ST79	Level Supply Anti-Algae (only Types 5270, 5272, 5273)
ST81	RS232 interface RK188pro (only 5120, 5270/105)
ST85	Buzzer
ST86	Transformer
ST87	Film-Jam-Sensor (only Types 5120, 5270/105)
ST88	Chemical Modul - Sensors (only Type 5120)

Coding Switches ST57, 62, 63, 64, 65, 70, 82 all open

LED		Description
D21	+24V	+24V DC Supply Circulation Pumps, Replen. Pumps (only Types 5120, 5270/105)
D23	+24V2	+24V DC Supply Solenoid Valves Drain / Supply Water, Exhaust Fan, Clutch 500MG2, Cover Release (only Type 5120)
D53	+5V	+5V DC Supply Digital Circuits
D54	+12 MOT	Speed Control of Main Drive
D55	Circ	Ts30 Circulation Pumps
D56	+12V	+12V DC Supply ICs
D57	DevRepl	TS31 Developer Replenishment Pump
D58	Clutch	TS32 Solenoid clutch 500MG2 (only Type 5120)
D59	Lift	TS34 Cover-Release 800MG1 (only Type 5120)
D60	Supply	TS35 Solenoid Valve Supply Water
D61	Drain	TS36 Solenoid Valve Drain Water
D62	Fan2	TS37 Exhaust Fan 1M2 Full Power
D63	Fan1	TS38 Exhaust Fan 1M2 Half Power
D64	HeatF	RS20 Heater Fixer 2 0HEAT2
D65	Blowe	RS19 Dryer Fans 0M1 / 1M1
D66	IR	RS21 Heater Dryer IR-Radiator 0IR1 / 1IR1
D67	HeatD	RS22 Heater Developer 0HEAT3
D70		RS23 Heater Dryer Convection 0HEAT1 / 1HEAT1
D167	+12V2	+12V2 DC Supply ICs
D172	FixRepl	TS33 Fixer Replenishment Pump
D174	FilmOut	Film-Jam-Sensor (only Types 5120, 5270/105)

PCB1 (GS1)

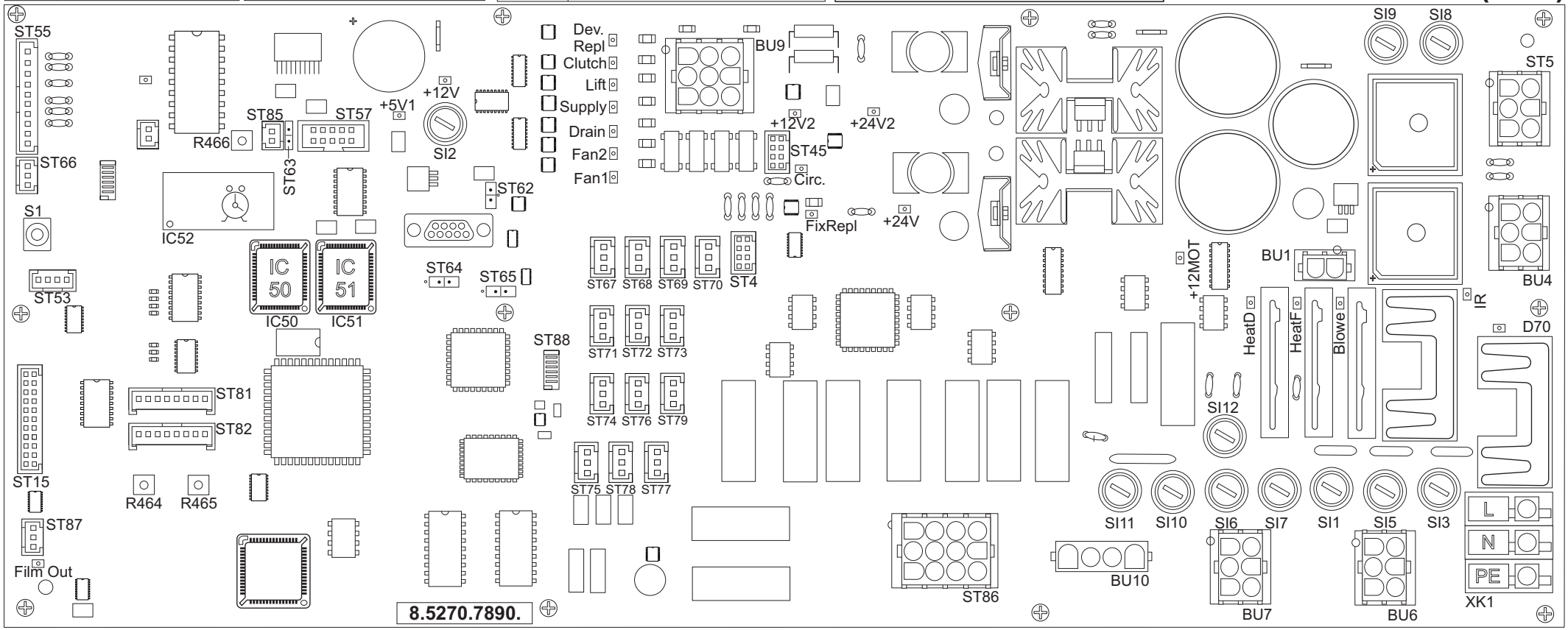

Spare Parts List

8

Section 8

contains exploded drawings for the identification of the spare parts in the machine with order numbers

HEALTHCARE
Imaging Services

Spare Parts List

Document No: DD+DIS022.05M

CLASSIC E.O.S. / E.O.S. CL

Type 5270/0100/0105

Edition 6, Revision 4

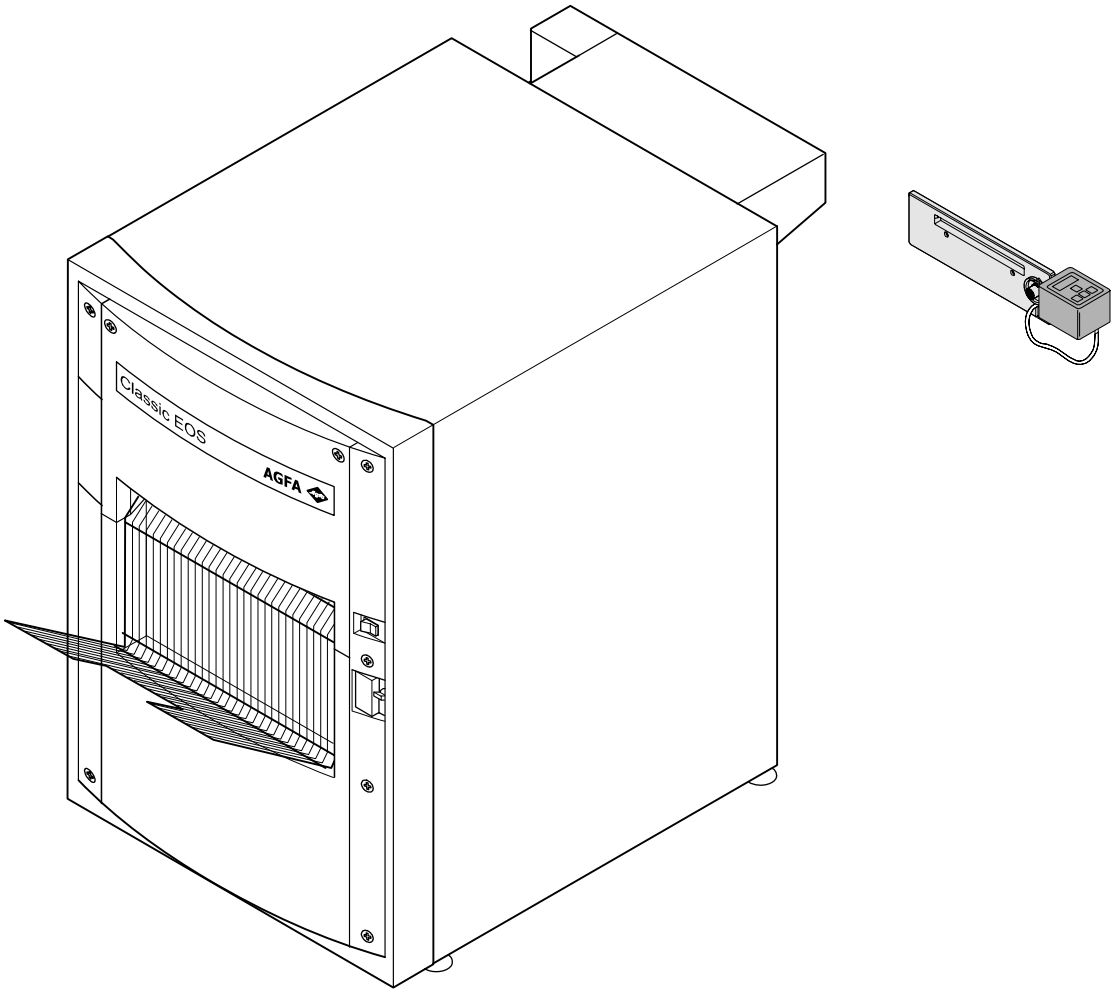

Internal update: 8

CONFIDENTIALITY NOTE:
Use, dissemination, distribution or reproduction of this document by unauthorized personnel is not permitted and may be unlawful.
DOCUMENT CONTROL NOTE:
The controlled version of this document resides on MedNet. Any printed copy of this document is uncontrolled.

Copyright © 2007 Agfa HealthCare N.V.

WARNING:

Improper operation or service activities may cause damage or injuries.

INSTRUCTION:

(1) Read the "Generic Safety Directions" document (see MEDNET GSO => General Info => Agfa HealthCare => Publications => Service Manual) prior to attempting any operation, repair or maintenance task on the equipment.
(2) Strictly observe all safety directions within the "Generic Safety Directions" and on the product.

WARNING:

Hazards may be introduced because of component failure or improper operation.

INSTRUCTION:

- Replace defective parts with Agfa HealthCare original spare parts.
- Use only tools and measuring instruments which are suitable for the procedure.
- Only approved Agfa HealthCare accessories must be used. For a list of compatible accessories contact your local Agfa HealthCare organization or www.agfa.com

---

DOCUMENT CONTROL NOTE:
The controlled version of this document resides on MedNet. Any printed copy of this document is uncontrolled.

Document History

Edition, Revision	Release Date	Changes compared to previous version 6.3
6.4	11-2007	Spare Parts List completely revised

Contact

Spare Parts ordering

Europe orderprocessing-europe.matrium@eads.com

Overseas orderprocessing-overseas.matrium@eads.com

Spare Parts returns

Worldwide returns.matrium@eads.com

NOTE:

For Recycling Information please refer to:

http://intra.agfanet/cd/ep/ehs.nsf

DOCUMENT CONTROL NOTE:
The controlled version of this document resides on MedNet. Any printed copy of this document is uncontrolled.

Contents

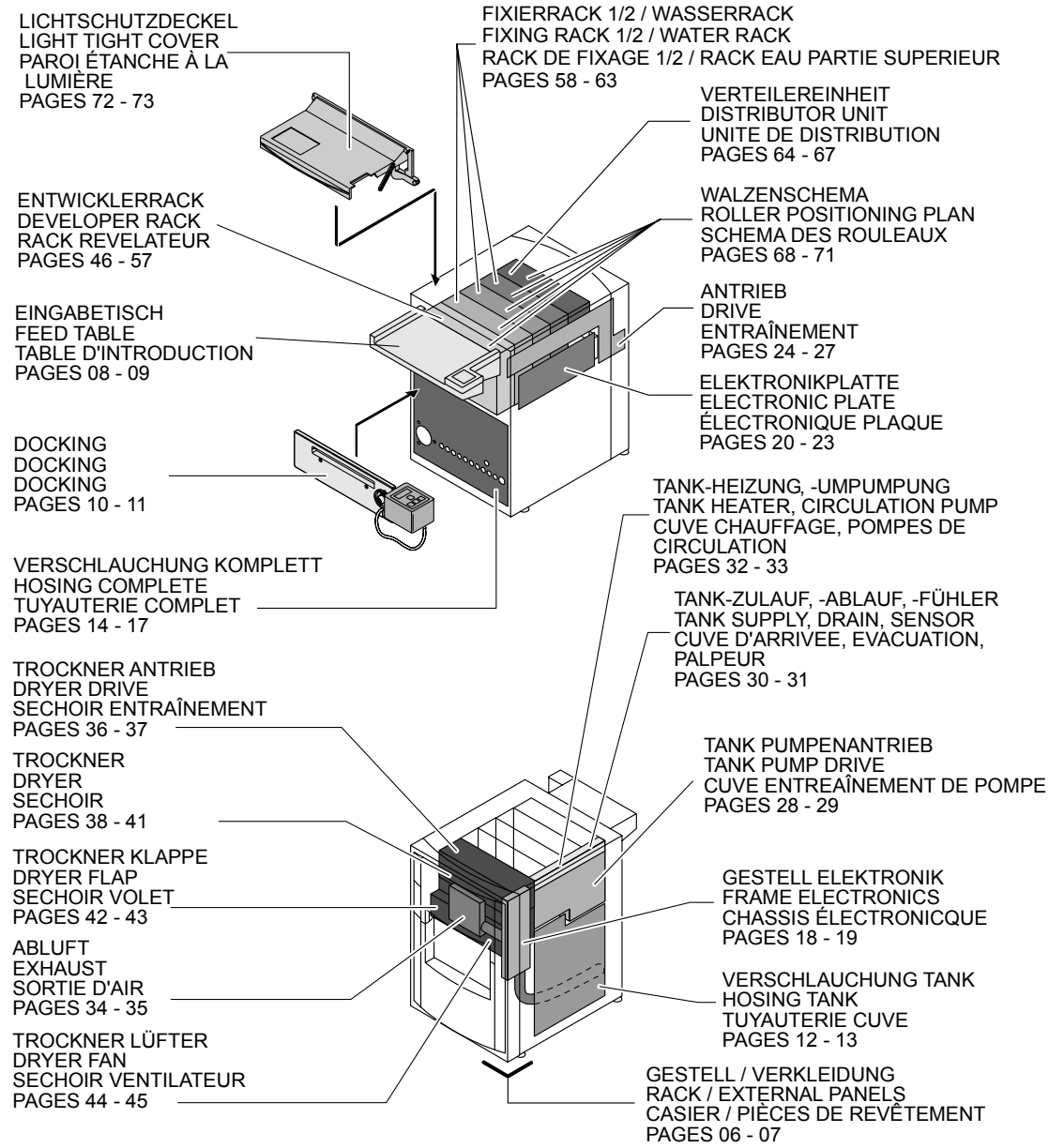

DOCUMENT CONTROL NOTE:
The controlled version of this document resides on MedNet. Any printed copy of this document is uncontrolled.

How to navigate the spare parts list online with the Acrobat Reader

(1) Open Bookmarks
(2) Click on "CONTENTS"

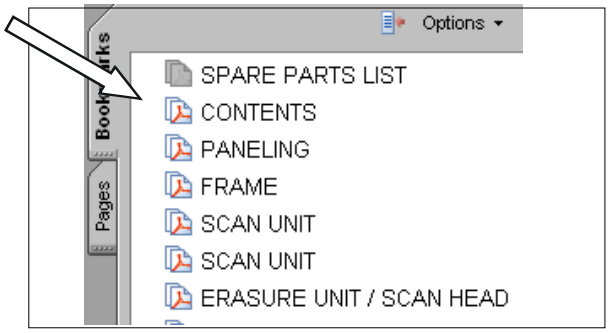

(3) See overview of the modules
(4) Click on requested module

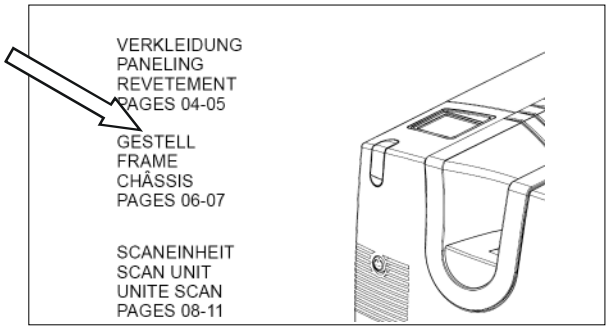

(5) Appropriate page opens

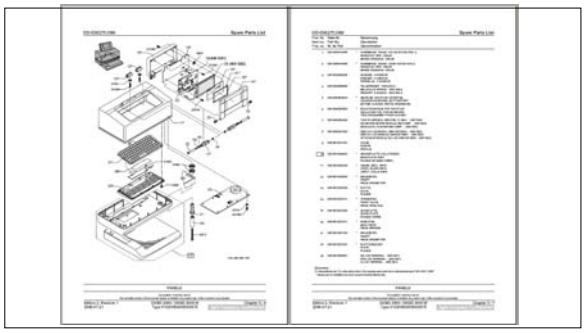

(6) Click on green arrow to navigate back to the overview of the modules

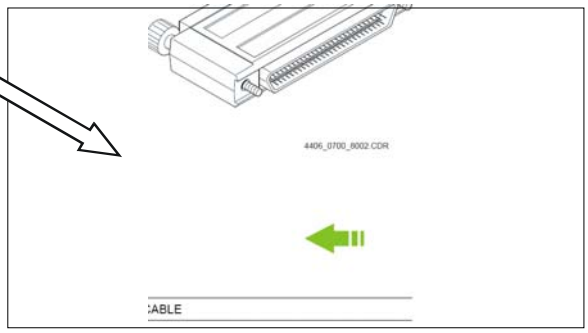

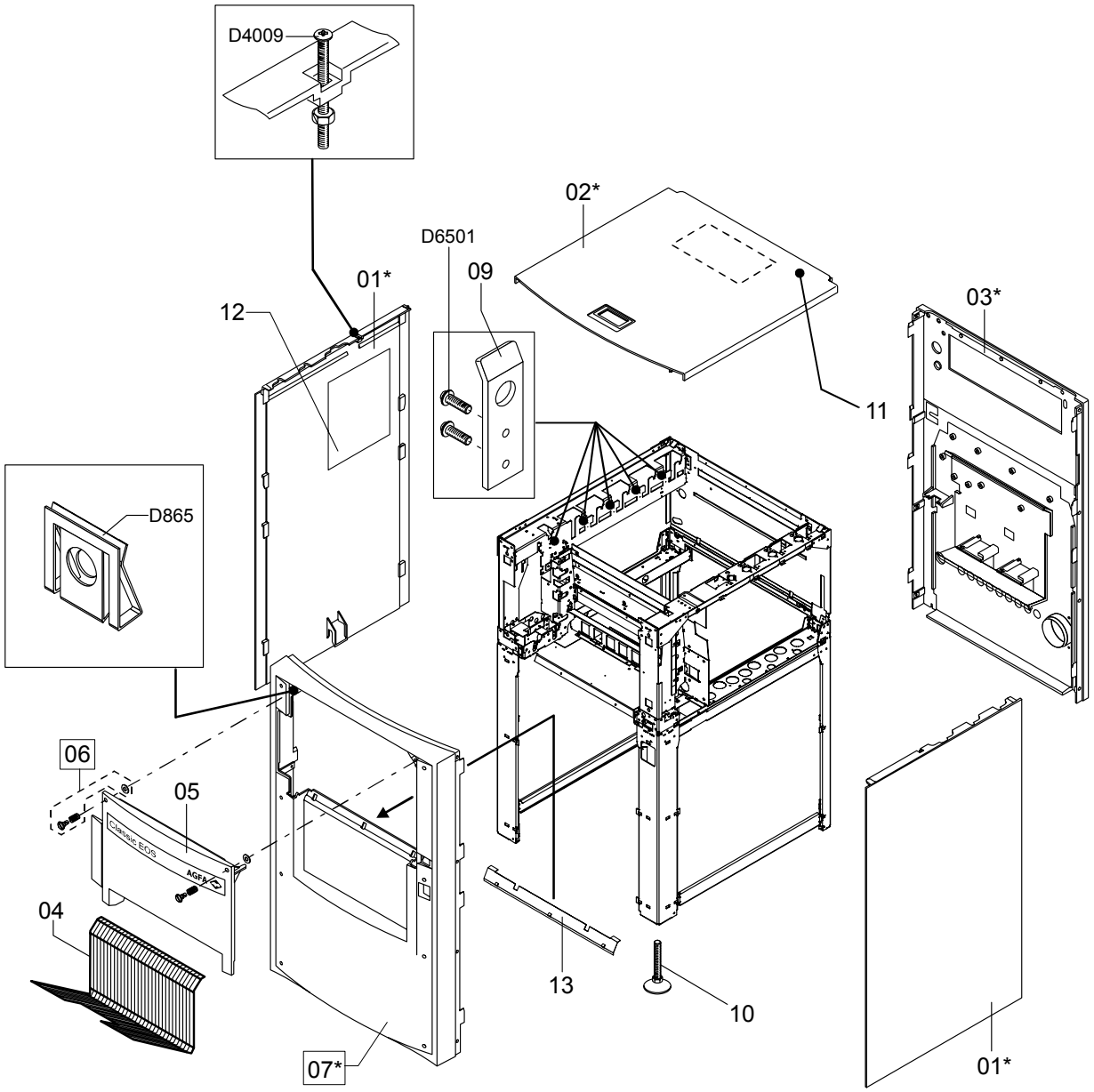

EXTERNAL PANELS

DOCUMENT CONTROL NOTE:
The controlled version of this document resides on MedNet. Any printed copy of this document is uncontrolled.

Pos. Nr. Item no. Pos. no.	Teile-Nr. Part No. Nr. de Ref.		Benennung Description Denomination
1	CM+9527031211	*	SEITENWAND, LACKIERT SIDE WALL, VARNISHED PAROI LATERALE, VARNI
2	CM+9527031603	*	DECKEL KPL. COVER COMPLETE COUVERCLE COMPLET
3	CM+9527031111	*	VORDERWAND, LACKIERT FRONT WALL, VARNISHED PAROI FRONTALE, VERNI
4	CM+9521036011		DRAHTSCHUTE CURIX HT 330-U WIRE CHUTE CURIX HT 330-U RECEPTACLE EN MÉTAL CURIX HT 330-U
5	CM+9527090902		RÜCKWAND KLAPPE REAR PANEL FLAP PANNEAU ARRIERE VOLET
6	CM+9527091501		VERSCHLUßZAPFEN KOMPLETT STUD COMPLETE PIVOT DE VERROUILLAGE COMPLETTE
7	CM+9527090801	*	RÜCKWAND REAR PANEL PANNEAU ARRIERE
8	CM+9033175760		AUFSTECKHALTERUNG SLIP-ON MOUNT FIXATION EMBOITABLE
9	CM+9522010111		HALTER HOLDER FIXATION
10	CM+9037150150		STELLSCHRAUBE TYP TS40 M10X85 SET SCREW TYPE TS40 M10X85 VIS DE REGLAGE TYPE TS40 M10X85
11	CM+9527080016		KLEBESCHILD WALZENSCHEMA V2 ADHESIVE LABEL ROLLER POSITIONING PLAN V2 ETIQUETTE ADHÉSIVE SCHEMA DES ROLEAUX V2
12	CM+9527011060	*	KLEBESCHILD ELEKTRONIK ADHESIVE LABEL ELECTRONIC ETIQUETTE ADHÉSIVE ÉLECTRONIQUE
13	CM+9527031441		WINKELLEISTE BRACKET BAR REGLETTE COUDEE

☐=Assembly

D =Standard part. For order please refer to the separate spare parts list for standard parts "DD+DIS011.93M"

* =No wearing part.

EXTERNAL PANELS

DOCUMENT CONTROL NOTE:
The controlled version of this document resides on MedNet. Any printed copy of this document is uncontrolled.

Agfa Company Confidential

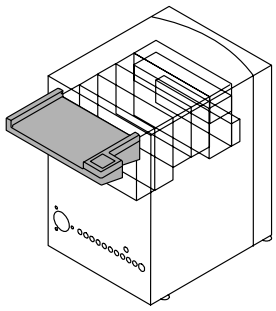

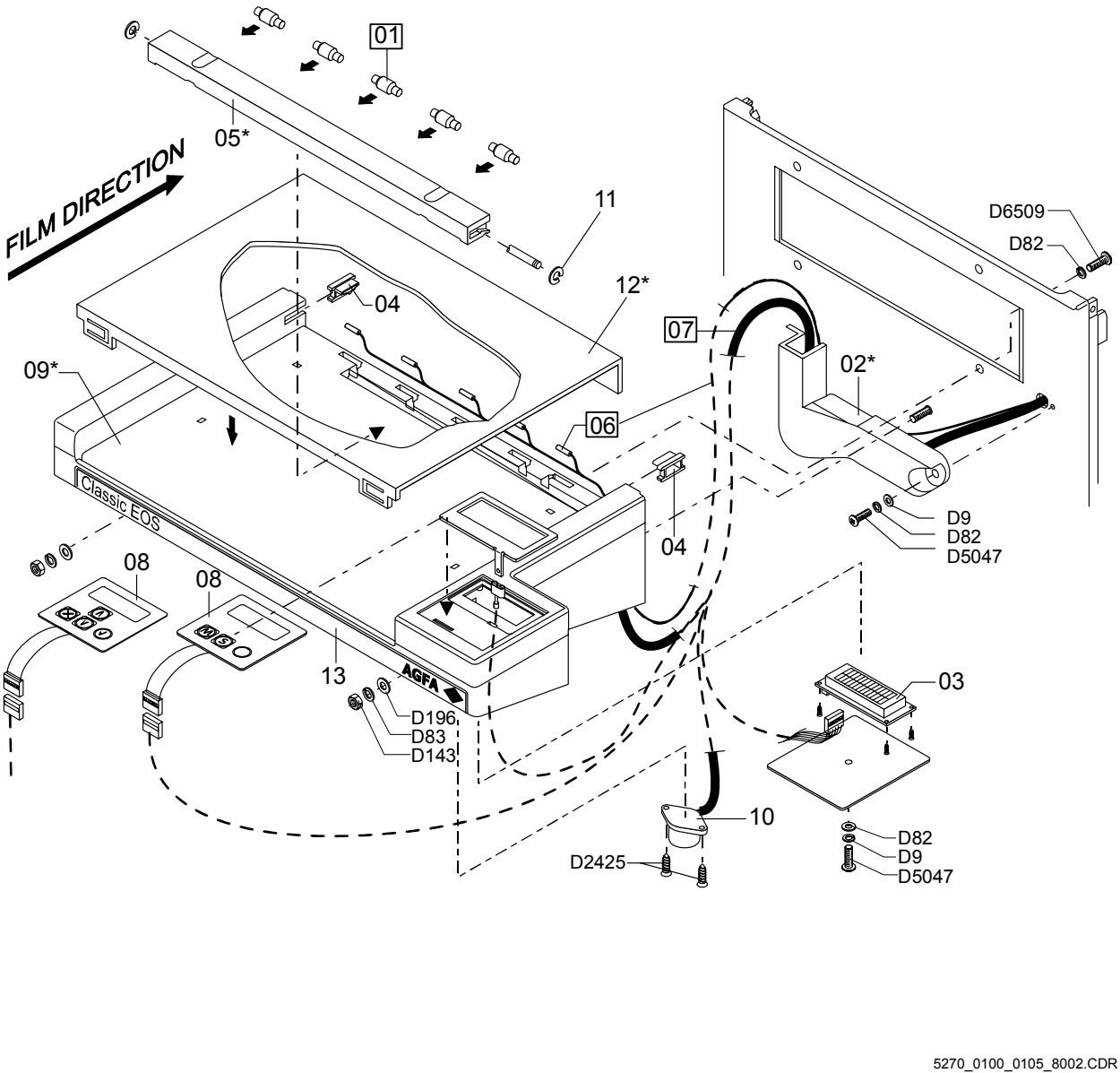

5270_0100_0105_8002.CDR

FEED TABLE

DOCUMENT CONTROL NOTE:
The controlled version of this document resides on MedNet. Any printed copy of this document is uncontrolled.

Pos. Nr. Item no. Pos. no.	Teile-Nr. Part No. Nr. de Ref.		Benennung Description Denomination
1	CM+9522016801		ABTASTROLLE DETECTOR ROLLER GALET DE DÉTECTION
2	CM+9527031151	*	ABDECKUNG DISPLAYKABEL COVER DISPLAYCABLE COUVERCLE CABLE DE AFFICHAGE
3	CM+9044282270		LCD ANZEIGE LCD DISPLAY DISPLAY LCD
4	CM+9527030250		RASTTEIL LATCH CRAN D'ARRET
5	CM+9527030314	*	LEISTE, LACKIERT BAR, VARNISHED REGLETTE, VARNI
6	CM+9527070801		ROLLENABTASTUNG ROLLER SCANNING DÉTÉCTION CYLINDRES
7	CM+9527070902		LEITUNG DISPLAY 330 SOLO E.O.S. LINE DISPLAY 330 SOLO E.O.S. CABLE AFFICHAGE 330 SOLO E.O.S.
8	CM+9042664240		FOLIENTASTATUR - TYP 5270/100 AB FN 2200 TOUCH KEY - TYPE 5270/100 FROM SN 2200 CLAVIER TACTILE - TYPE 5270/100 A PARTIR DE NS 2200
8	CM+9042664030		FOLIENTASTATUR - TYP 5270/100 BIS FN 2199 TOUCH KEY - TYPE 5270/100 UP TO SN 2199 CLAVIER TACTILE - TYPE 5270/100 JUSQU'AU NS 2199
9	CM+9527095000	*	EINGABETISCH FEED TABLE PLATEAU D'INTRODUCTION
10	CM+9523024300		SUMMER BUZZER BUZZER
11	CM+9943230250		SICHERUNGSSCHEIBE RETAINER RING RONDELLE D'ARRET
12	CM+9527030211	*	TISCHBLECH TABLE PLATE PLAQUE DE TABLE
13	CM+9527090010		KLEBESCHILD ADHESIVE LABEL ETIQUETTE ADHÉSIVE

☐=Assembly
D =Standard part. For order please refer to the separate spare parts list for standard parts "DD+DIS011.93M"
* =No wearing part.

FEED TABLE

DOCUMENT CONTROL NOTE:
The controlled version of this document resides on MedNet. Any printed copy of this document is uncontrolled.

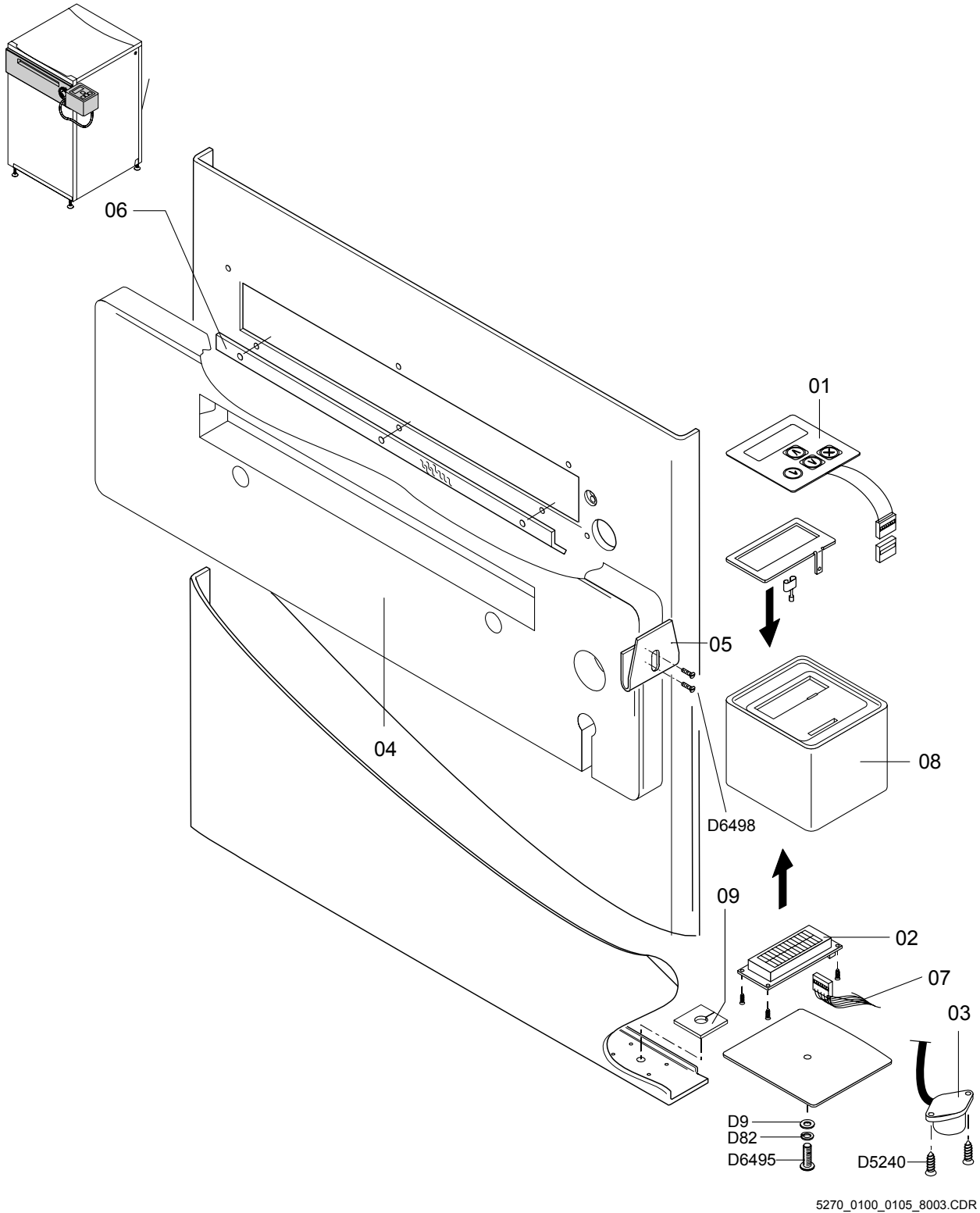

DOCKING

DOCUMENT CONTROL NOTE:
The controlled version of this document resides on MedNet. Any printed copy of this document is uncontrolled.

Pos. Nr. Item no. Pos. no.	Teile-Nr. Part No. Nr. de Ref.	Benennung Description Denomination
1	CM+9042664240	FOLIENTASTATUR TOUCH KEY CLAVIER TACTILE
2	CM+9044282270	LCD ANZEIGE LCD DISPLAY DISPLAY LCD
3	CM+9523024300	SUMMER BUZZER BUZZER
4	CM+9527019640	PLATTE DOCKING PLATE DOCKING PLAQUE DOCKING
5	CM+9527019660	KLEMMTEIL CLAMPING PART PIECE DE SERRAGE
6	CM+9527320600	LEITBLECH GUIDE PLATE TOLE DE GUIDAGE
7	CM+9527070902	LEITUNG DISPLAY 330 SOLO E.O.S. LINE DISPLAY 330 SOLO E.O.S. CABLE AFFICHAGE 330 SOLO E.O.S.
8	CM+9527321110	BEDIENGEHÄUSE CONTROL PANEL BOX BOITIER DE COMMANDE
9	CM+9527337720	DICHTUNGSPLATTE SEALING PLATE PLAQUE D'ETANCHEITE

☐=Assembly
D =Standard part. For order please refer to the separate spare parts list for standard parts "DD+DIS011.93M"
* =No wearing part.

DOCKING

DOCUMENT CONTROL NOTE:
The controlled version of this document resides on MedNet. Any printed copy of this document is uncontrolled.

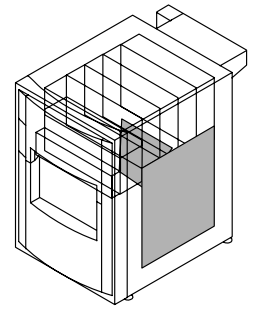

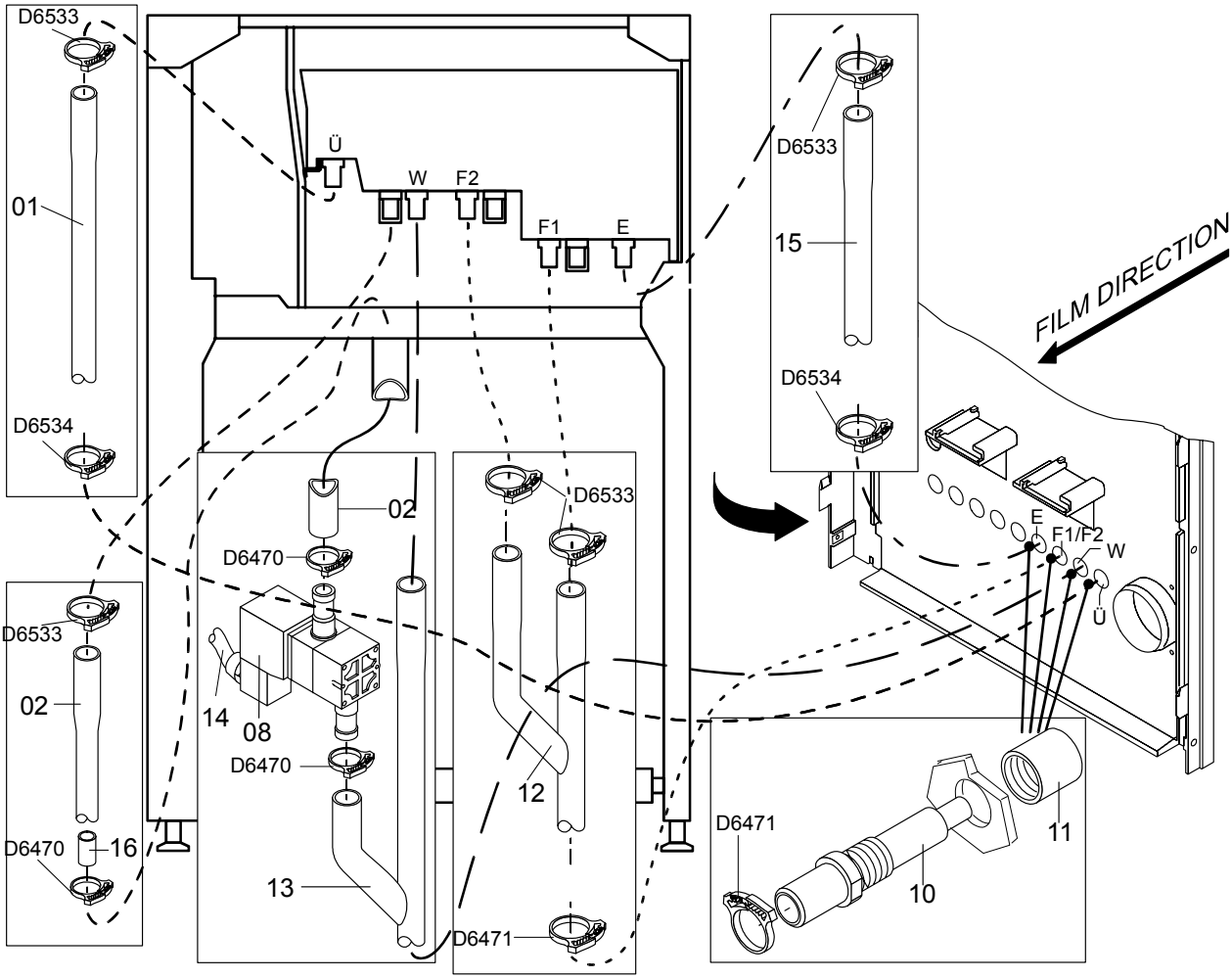

5270_0100_0105_8004.CDR

DOCUMENT CONTROL NOTE:
The controlled version of this document resides on MedNet. Any printed copy of this document is uncontrolled.

Pos. Nr. Item no. Pos. no.	Teile-Nr. Part No. Nr. de Ref.	Benennung Description Denomination
1	CM+9527050770	SCHLAUCH ÜBERLAUFWANNE TANK HOSE OVERFLOW TRAY TUYAU CUVETTE TROP PLEIN
2	CM+9527050781	SCHLAUCH HOSE TUYAU
3	CM+9034200440	Y-VERBINDUNG Y-CONNECTING CONNECTION Y
4	CM+9037170130	SCHLAUCHSCHELLE 28,5 - 32,5 HOSE CLAMP 28,5 - 32,5 COLLIER DE SERRAGE 28,5 - 32,5
5	CM+9037200220	SCHLAUCHSCHELLE 21,8 - 25,1 HOSE CLAMP 21,8 - 25,1 COLLIER DE SERRAGE 21,8 - 25,1
6	CM+9037200300	SCHLAUCHSCHELLE 17,8 - 20,4 HOSE CLAMP 17,8 - 20,4 COLLIER DE SERRAGE 17,8 - 20,4
7	CM+9037200400	SCHLAUCHSCHELLE SNP-22 HOSE CLAMP SNP-22 COLLIER DE SERRAGE SNP-22
8	CM+9039501880	MAGNETVENTIL ABLAUF 2/2-WEGE 24V (NO) SOLENOID VALVE, DRAIN ELECTROVANNE, EVACUATION
10	CM+9521075041	SCHLAUCHANSCHLUSS 20/16 HOSE CONNECTION 20/16 RACCORD TUYAU 20/16
11	CM+9521075050	GEWINDEBUCHSE THREADED BUSH DOUILLE FILETEE
12	CM+9527050750	Y-SCHLAUCH Y-HOSE Y-TUYAU
13	CM+9527050721	Y-SCHLAUCH Y-HOSE Y-TUYAU
14	CM+9527074300	KABEL 2POL. MAGNETVENTIL ABLAUF CABLE 2POL. SOLENOID VALVE DRAIN OUTLET CABLE 2POL. ELECTROVANNE EVACUATION
15	CM+9527050740	SCHLAUCH E HOSE D TUYAU R
16	CM+9527050520	ROHR PIPE TUBE

☐=Assembly
D =Standard part. For order please refer to the separate spare parts list for standard parts "DD+DIS011.93M"
* =No wearing part.

HOSING TANK

DOCUMENT CONTROL NOTE:
The controlled version of this document resides on MedNet. Any printed copy of this document is uncontrolled.

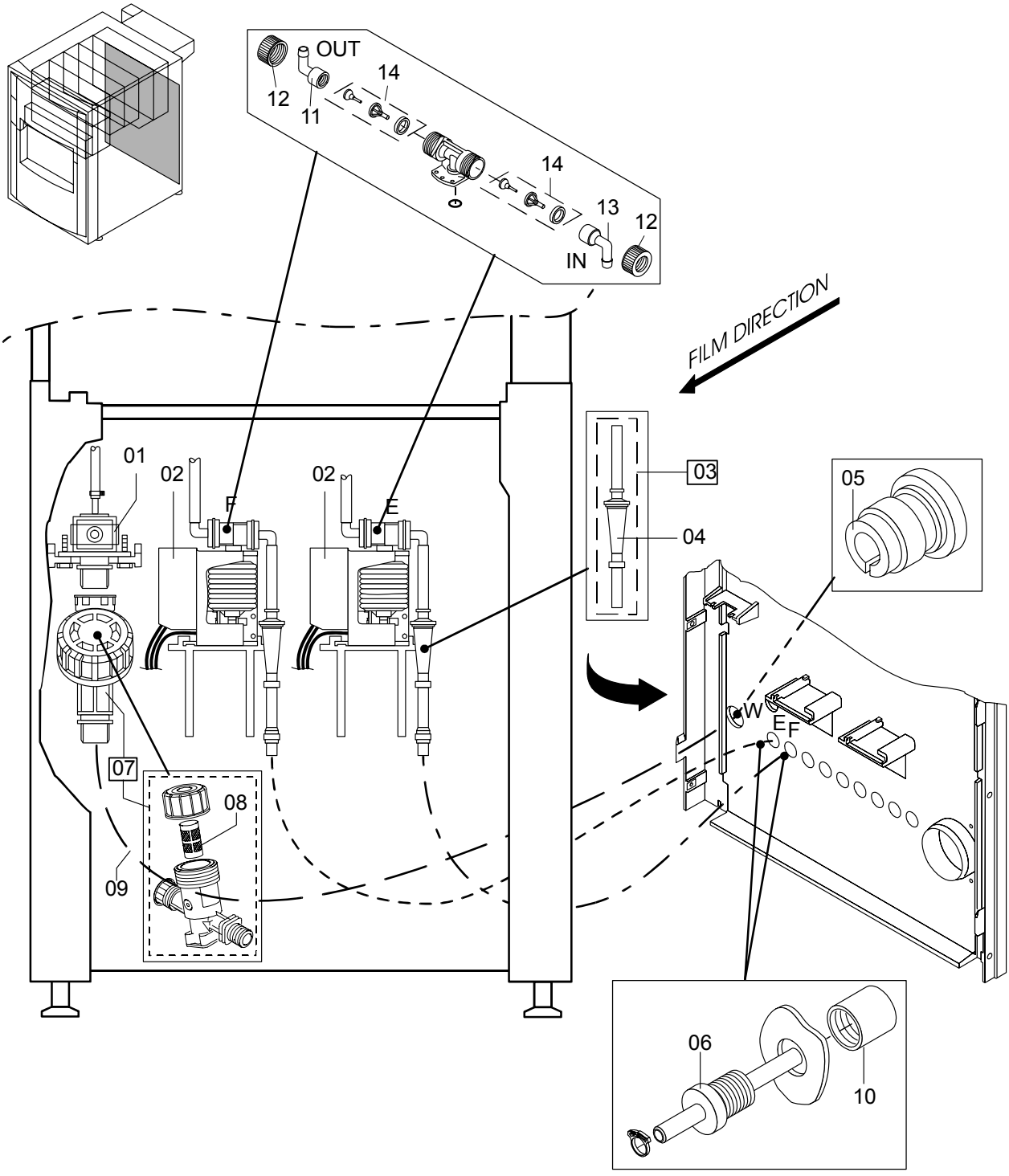

5270_0100_0105_8005.CDR

HOSING COMPLETE

DOCUMENT CONTROL NOTE:
The controlled version of this document resides on MedNet. Any printed copy of this document is uncontrolled.

Pos. Nr. Item no. Pos. no.	Teile-Nr. Part No. Nr. de Ref.	Benennung Description Denomination
1	CM+9042421340	OPTION : MAGNETVENTILZULAUF 24V (NC) OPTION: SOLENOID VALVE SUPPLY 24V (NC) OPTION: SOUPAPE MAGNETIQUE ARRIVEE 24V (NC)
2	CM+9043172060	DOSIERPUMPE METERING PUMP POMPE DE DOSAGE
3	CM+9521072701	FILTER VOLLSTÄNDIG FILTER COMPLETE FILTRE COMPLET
4	CM+9890412270	FILTER FILTER FILTRE
5	CM+9521075120	SCHLAUCHDURCHFÜHRUNG HOSE PASSAGE PASSAGE DE TUYAUX
6	CM+9521075161	SCHLAUCHANSCHLUSS HOSE CONNECTION RACCORD DE TUYAU
7	CM+9034200310	SCHMUTZFÄNGER DIRT FILTER COLLECTEUR D'IMPURETÉS
8	CM+9819390110	FILTER FILTER FILTRE
9	CM+9036260160	WASSERZULAUFSCHLAUCH 3/8"X2M WATER SUPPLY HOSE 3/8"X2M TUYAU D'ARRIVÉE D'EAU 3/8"X2M
10	CM+9521075050	GEWINDEBUCHSE THREADED BUSH DOUILLE FILETEE
11	CM+9527092010	AUSLASS DRAIN SORTIE
12	CM+9527092020	ÜBERWURFMUTTER CAP NUT ÉCROU D'ACCOUPLEMENT
13	CM+9527092030	EINLASS SUPPLY ENTRÉE
14	CM+9527092040	TELLERVENTILEINHEIT DISK VALVE UNIT ENSEMBLE SOUPAPES À DISQUE

☐=Assembly
D =Standard part. For order please refer to the separate spare parts list for standard parts "DD+DIS011.93M"
* =No wearing part.

HOSING COMPLETE

DOCUMENT CONTROL NOTE:
The controlled version of this document resides on MedNet. Any printed copy of this document is uncontrolled.

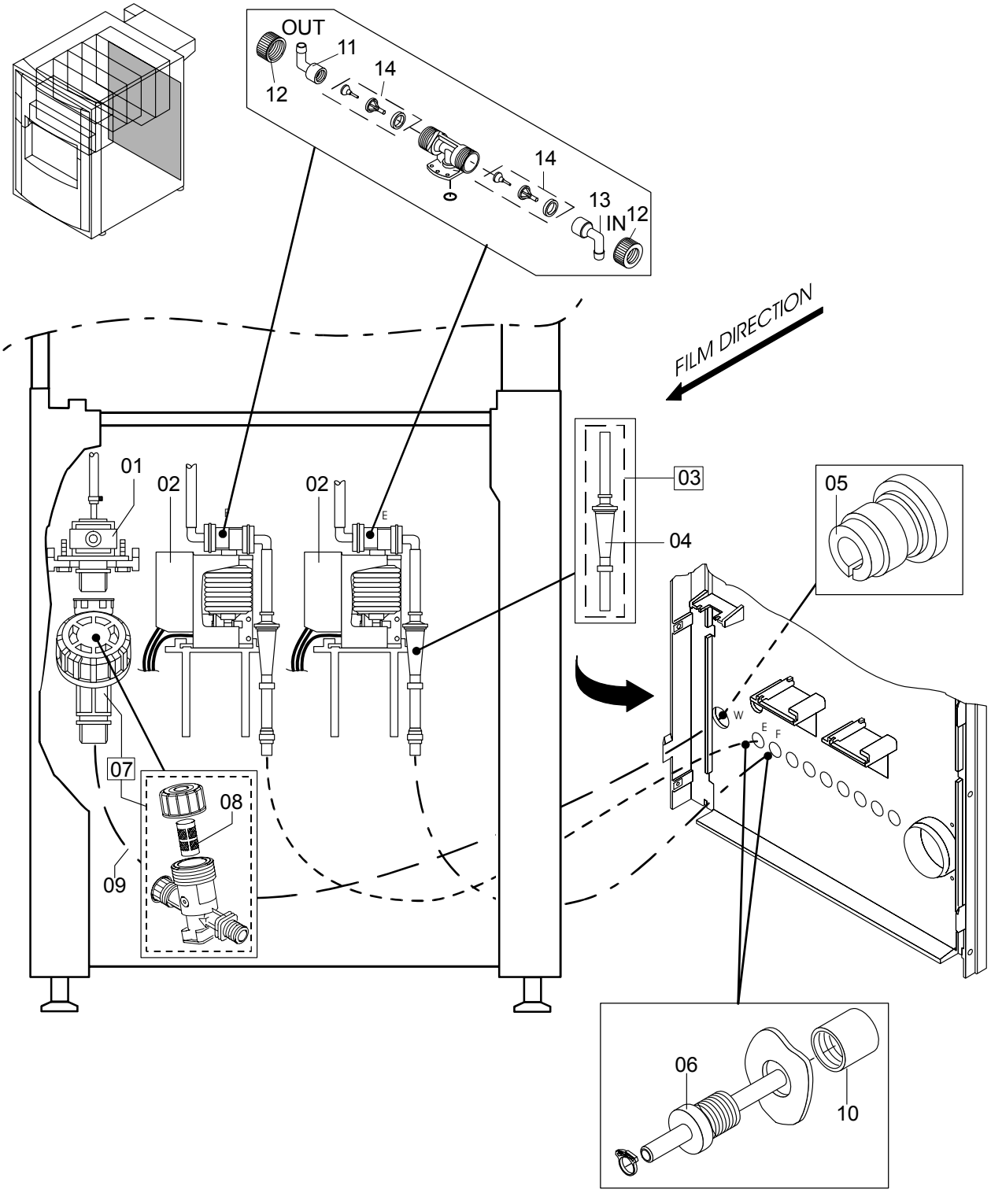

5270_0100_0105_8006.CDR

HOSING, COMPLETE

DOCUMENT CONTROL NOTE:
The controlled version of this document resides on MedNet. Any printed copy of this document is uncontrolled.

Pos. Nr. Item no. Pos. no.	Teile-Nr. Part No. Nr. de Ref.	Benennung Description Denomination
1	CM+9042421340	OPTION : MAGNETVENTILZULAUF 24V (NC) OPTION: SOLENOID VALVE SUPPLY 24V (NC) OPTION: SOUPAPE MAGNETIQUE ARRIVEE 24V (NC)
2	CM+9043172390	DOSIERPUMPE 24V= - TYP 5270/105 AB FN 1138 METERING PUMP 24V= - TYPE 5270/105 FROM SN 1138 POMPE DE DOSAGE 24V= - TYPE 5270/105 A PARTIR DE NS 1138
2	CM+9043172060	DOSIERPUMPE - TYP 5270/105 BIS FN 1137 METERING PUMP - TYPE 5270/105 UP TO SN 1137 POMPE DE DOSAGE - TYPE 5270/105 JUSQU'AU NS 1137
3	CM+9521072701	FILTER VOLLSTÄNDIG FILTER COMPLETE FILTRE COMPLET
4	CM+9890412270	FILTER FILTER FILTRE
5	CM+9521075120	SCHLAUCHDURCHFÜHRUNG HOSE PASSAGE PASSAGE DE TUYAUX
6	CM+9521075161	SCHLAUCHANSCHLUSS HOSE CONNECTION RACCORD DE TUYAU
7	CM+9034200310	SCHMUTZFÄNGER DIRT FILTER COLLECTEUR D'IMPURETÉS
8	CM+9819390110	FILTER FILTER FILTRE
9	CM+9036260160	WASSERZULAUFSCHLAUCH 3/8"X2M WATER SUPPLY HOSE 3/8"X2M TUYAU D'ARRIVÉE D'EAU 3/8"X2M
10	CM+9521075050	GEWINDEBUCHSE THREADED BUSH DOUILLE FILETEE
11	CM+9527092010	AUSLASS DRAIN SORTIE
12	CM+9527092020	ÜBERWURFMUTTER CAP NUT ÉCROU D'ACCOUPLEMENT
13	CM+9527092030	EINLASS SUPPLY ENTRÉE
14	CM+9527092040	TELLERVENTILEINHEIT DISK VALVE UNIT ENSEMBLE SOUPAPES À DISQUE

☐=Assembly
D =Standard part. For order please refer to the separate spare parts list for standard parts "DD+DIS011.93M"
* =No wearing part.

HOSING, COMPLETE

DOCUMENT CONTROL NOTE:
The controlled version of this document resides on MedNet. Any printed copy of this document is uncontrolled.

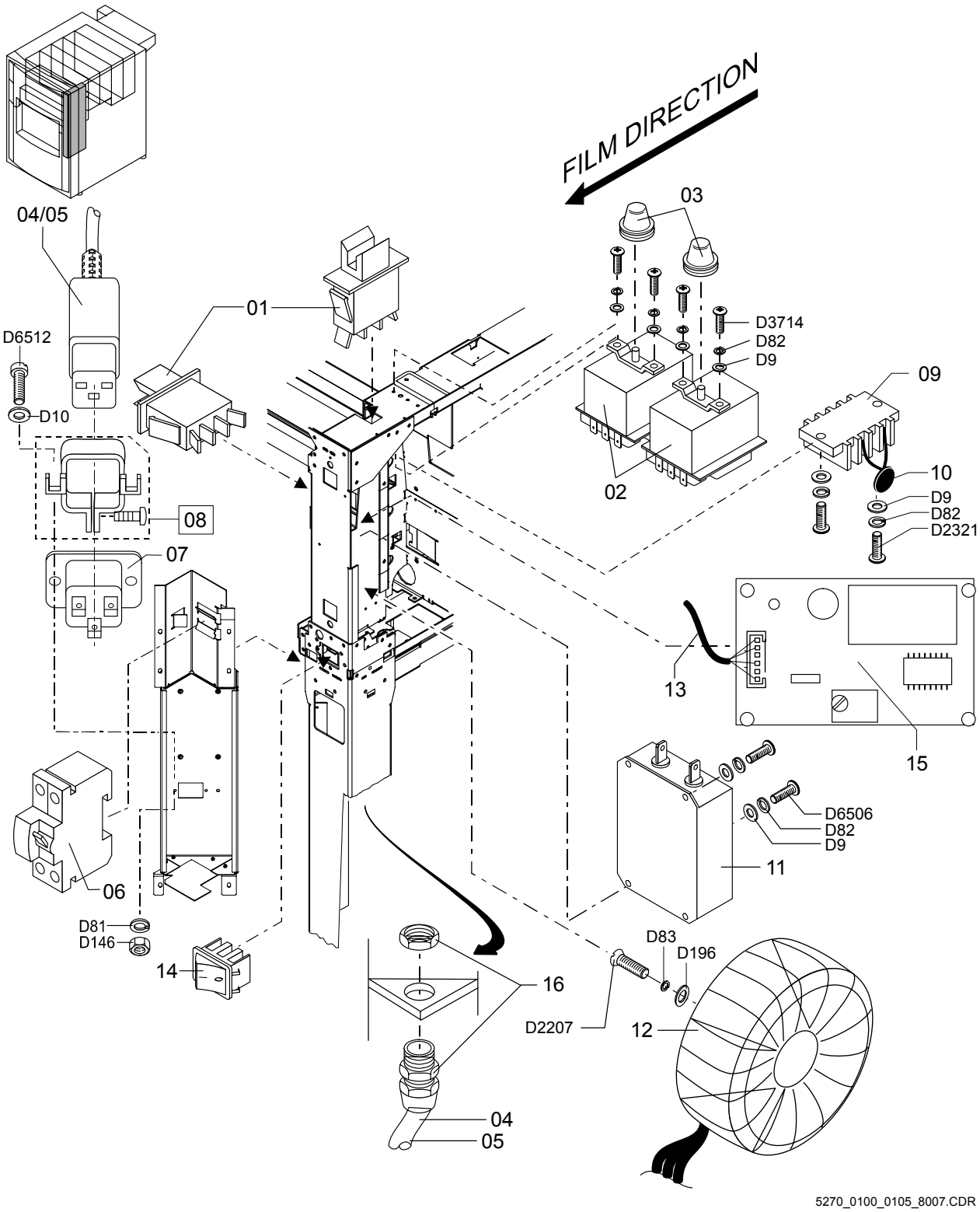

FRAME ELECTRONICS

DOCUMENT CONTROL NOTE:
The controlled version of this document resides on MedNet. Any printed copy of this document is uncontrolled.

Pos. Nr. Item no. Pos. no.	Teile-Nr. Part No. Nr. de Ref.	Benennung Description Denomination
1	CM+9042663040	TÜR, DECKELSCHALTER CASSETTE UNIT SAFETY SWITCH PORTE, INTERRUPTEUR DE COUVERCLE
2	CM+9042664520	TEMPERATURBEGRENZER 63°C ROSTFREI TEMPERATURE LIMITER 63°C STAINLESS LIMITATEUR DE TEMPERATURE 63°C INOXYDABLE
3	CM+9527011330	TÜLLE SLEEVE MANCHON
4	CM+9527074101	VDE NETZLEITUNG - TYP 5270/100 BIS FN 1139 POWER LINE - TYPE 5270/100 UP TO SN 1139 LIGNE D'ALIMENTATION - TYPE 5270/100 JUSQU'AU NS 1139
4	CM+9047710530	ANSCHLUßLEITUNG SCHUKO - TYP 5270/100 AB FN 1140 CONNECTING LEAD GROUNDED SOCKET - TYPE 5270/100 FROM SN 1140 LIGNE DE RACCORDEMENT - TYPE 5270/100 A PARTIR DE NS 1140
5	CM+9047710540	ANSCHLUßLEITUNG - TYP 5270/100 AB FN 1140 CONNECTING LEAD - TYPE 5270/100 FROM SN 1140 LIGNE DE RACCORDEMENT - TYPE 5270/100 A PARTIR DE NS 1140
5	CM+9527074202	UL NETZLEITUNG - TYP 5270/100 BIS FN 1139 POWER LINE - TYPE 5270/100 UP TO SN 1139 LIGNED'ALIMENTATION - TYPE 5270/100 JUSQU'AU NS 1139
6	CM+9045231710	FI-SCHALTER 25A/30MA FI-SWITCH 25A/30MA FI-INTERRUPTEUR 25A/30MA
7	CM+9047189510	GERÄTESTECKER MACHINE PLUG FICHE MACHINE
8	CM+9047189560	HALTEKLAMMER - TYP 5270/100 AB FN 1140 CLAMP - TYPE 5270/100 FROM SN 1140 AGRAFE - TYPE 5270/100 A PARTIR DE NS 1140
9	CM+9047202700	FLACHSTECKERLEISTE - 5270/100 BIS FN4499; 5270/105 FN1137 FLAT CONNECTOR TERMINAL STRIP - 5270/100 UP TO SN 4499; 5270/105 SN 1137 BARRETTE PLATE DE RACCORDEMENT - 5270/100 JUSQU'AU NS4499; 5270/105 NS1137
10	CM+9044380100	NTC-14 / 20% - 5270/100 BIS FN4499; 5270/105 FN1137 NTC-14 / 20% - 5270/100 UP TO SN 4499; 5270/105 SN 1137 NTC-14 / 20% - 5270/100 JUSQU'AU NS4499; 5270/105 NS1137
11	CM+9043660070	NETZLEITUNGSFILTER 250V/20A LINE FILTER 250V/20A FILTRE DE LIGNE D'ALIMENTATION 250V/20A
12	CM+9043371800	RINGKERNTRAFO 19591-P1S12 - 5270/100 AB FN 4500; 5270/105 FN 1138 TRANSFORMER - 5270/100 FROM SN 4500; 5270/105 SN 1138 TRANSFORMATEUR - 5270/100 A PARTIR DE NS4500; 5270/105 NS1138
12	CM+9043371820	RINGKERNTRAFO 18891 - P1S12 - 5270/100 BIS FN 4499; 5270/105 FN 1137 TRANSFORMER - 5270/100 UP TO SN 4499; 5270/105 SN 1137 TRANSFORMATEUR - 5270/100 JUSQU'AU NS4499; 5270/105 NS1137
13	CM+9527075200	STROMSENSORKABEL GS1 RD 4POL. CABLE POWER SENSOR GS1 RD 4POL. CABLE CIRCUIT SENSOR GS1 RD 4POL.
14	CM+9946025522	WIPPENSCHALTER ROCKER SWITCH TOUCHE A BASCULE
15	CM+9949936203	GS STROMSENSORKARTE PCB POWER SENSOR BOARD CARTE D'ALIMENTATION DU DÉTECTEUR
16	CM+9527090100	PG VERSCHRAUBUNG - TYP 5270/100 BIS FN 1139 THREADED ADAPTER - TYPE 5270/100 UP TO SN 1139 VISSAGE - TYPE 5270/100 JUSQU'AU NS 1139

☐=Assembly

D =Standard part. For order please refer to the separate spare parts list for standard parts "DD+DIS011.93M"

* =No wearing part.

FRAME ELECTRONICS

DOCUMENT CONTROL NOTE:
The controlled version of this document resides on MedNet. Any printed copy of this document is uncontrolled.

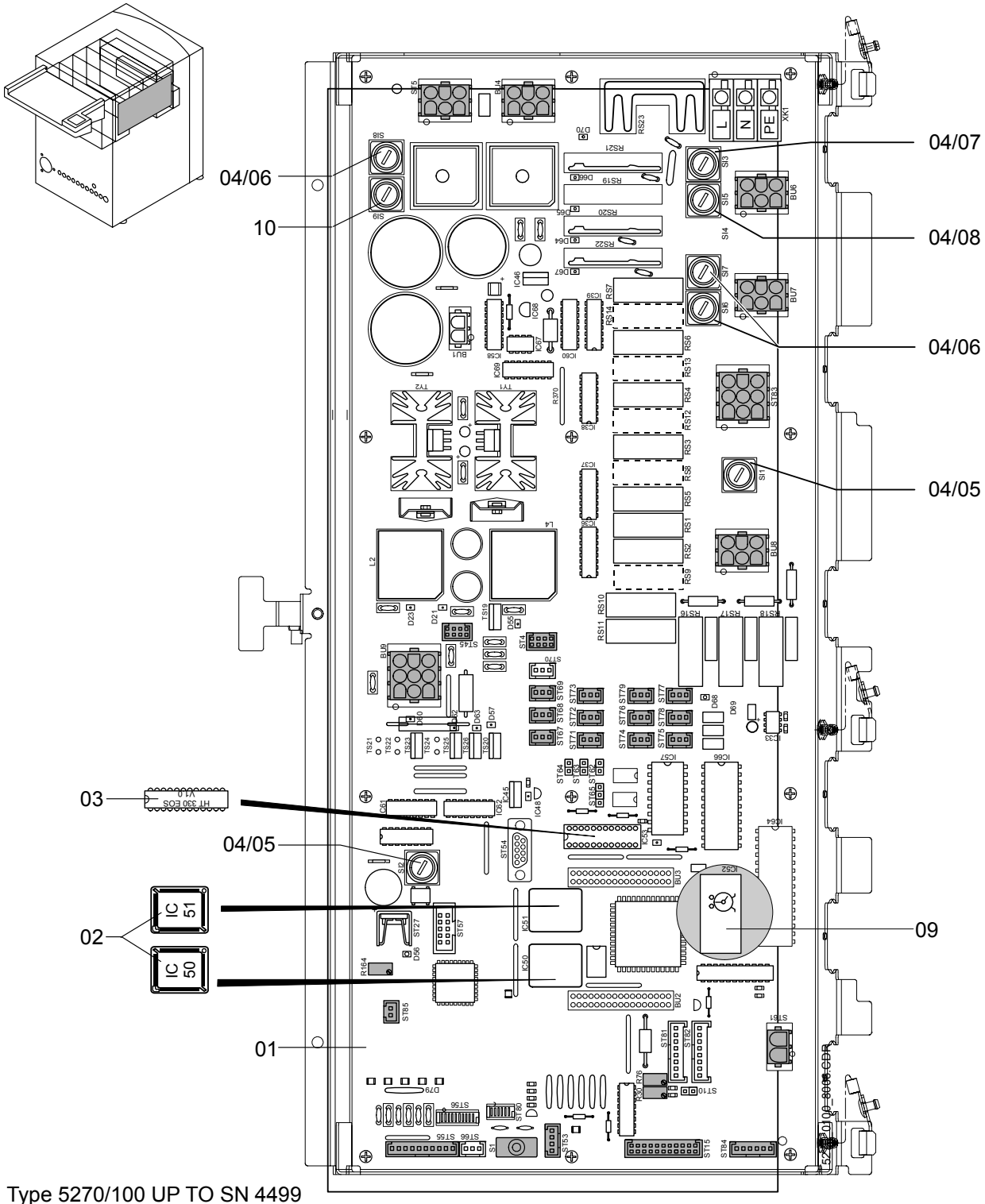

Type 5270/100 UP TO SN 4499
Type 5270/105 UP TO SN 1137

ELECTRONIC PLATE

DOCUMENT CONTROL NOTE:
The controlled version of this document resides on MedNet. Any printed copy of this document is uncontrolled.

Pos. Nr. Item no. Pos. no.	Teile-Nr. Part No. Nr. de Ref.	Benennung Description Denomination
1	CM+9527079601	STEUERKARTE COMPACT MIT EPROM CONTROL BOARD COMPACT WITH EPROM BOITE ELECTRONIQUE COMPACT AVEC EPROM
2	CM+9527093504	EPROM-SATZ IC50 / IC51 EOSUNIV 1102 EPROM-SATZ IC50 / IC51 EOSUNIV 1102 EPROM-SATZ IC50 / IC51 EOSUNIV 1102
3	CM+9527077160	PLD PROG. IC53 V1001 PLD PROG. IC53 V1001 PLD PROG. IC53 V1001
4	CM+9045191300	RENKVERSCHLUSSKAPPE RETAINER CAP CAPUCHON DE SECURITE
5	CM+9045197270	SICHERUNG T 1,25A ---- (SI1 / SI2) FUSE T 1,25A ---- (SI1 / SI2) FUSIBLE T 1,25A ---- (SI1 / SI2)
6	CM+9045197050	SICHERUNG T 6,25A ---- (SI6 / SI7 / SI8 / SI9) FUSE T 6,25A ---- (SI6 / SI7 / SI8 / SI9) FUSIBLE T 6,25A ---- (SI6 / SI7 / SI8 / SI9)
7	CM+9045230350	SICHERUNG T 10A ---- (SI3) FUSE T 10A ---- (SI3) FUSIBLE T 10A ---- (SI3)
8	CM+9045197200	SICHERUNG T 4A ---- (SI5) FUSE T 4A ---- (SI5) FUSIBLE T 4A ---- (SI5)
9	CM+9044170300	UHRENBAUSTEIN IC52 CLOCK CHIP IC52 COMPOSANT D'HORLOGE IC52
10	CM+9045231510	SICHERUNG T 8A FUSE T 8A FUSIBLE T 8A

☐=Assembly
D =Standard part. For order please refer to the separate spare parts list for standard parts "DD+DIS011.93M"
* =No wearing part.

ELECTRONIC PLATE

DOCUMENT CONTROL NOTE:
The controlled version of this document resides on MedNet. Any printed copy of this document is uncontrolled.

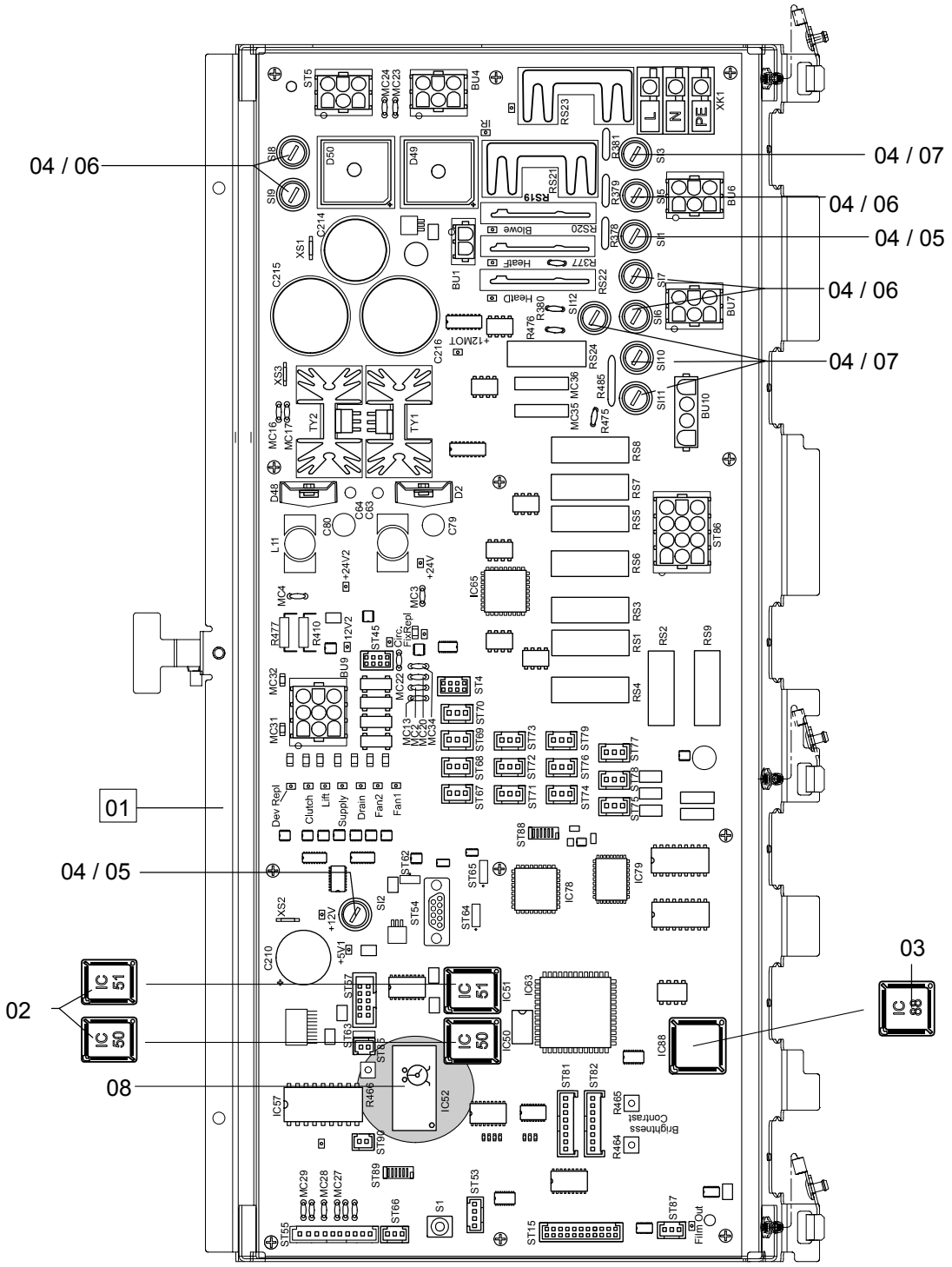

Type 5270/100 FROM SN 4500
Type 5270/105 FROM SN 1138

5270_0100_0105_8009.cdr

ELECTRONIC PLATE

DOCUMENT CONTROL NOTE:
The controlled version of this document resides on MedNet. Any printed copy of this document is uncontrolled.

Pos. Nr. Item no. Pos. no.	Teile-Nr. Part No. Nr. de Ref.	Benennung Description Denomination
1	CM+9527094503	E-KASTEN+STEUERKARTE MIT EPROM ELECTRIC BOX+CONTROL BOARD WITH EPROM BOITE ELECTRONIQUE+CONTROL BOARD AVEC EPROM
2	CM+9527094103	EPROM-SATZ IC50/51 CLLC1301 EPROM SET IC50/51 CLLC1301 EPROM VANNES IC50/51 CLLC1301
3	CM+9527077170	PLD PROG. IC88 V1001 PLD PROG. IC88 V1001 PLD PROG. IC88 V1001
4	CM+9045191300	RENKVERSCHLUSSKAPPE RETAINER CAP CAPUCHON DE SECURITE
5	CM+9045197270	SICHERUNG T 1,25A - (SI1 / SI2) FUSE T 1,25A - (SI1 / SI2) FUSIBLE T 1,25A - (SI1 / SI2)
6	CM+9045197050	SICHERUNG T 6,25A - (SI5 / SI6 / SI7 / SI8 / SI9) FUSE T 6,25A - (SI5 / SI6 / SI7 / SI8 / SI9) FUSIBLE T 6,25A - (SI5 / SI6 / SI7 / SI8 / SI9)
7	CM+9045230350	SICHERUNG T 10A - (SI3 / SI10 / S11 / S12) FUSE T 10A - (SI3 / SI10 / S11 / S12) FUSIBLE T 10A - (SI3 / SI10 / S11 / S12)
8	CM+9044170300	UHRENBAUSTEIN IC52 (BIS CM+952709450 INDEX 2, SIEHE SIB DD+DIS223.07D) CLOCK CHIP IC52 (UP TO CM+952709450 INDEX 2, SEE SIB DD+DIS223.07E) COMPOSANT D'HORLOGE IC52 (JUSQU'AU CM+952709450 INDEX 2, REGARDEZ SIB DD+DIS223.07F)
8	CM+9048520120	SNAPHAT BATTERY (AB CM+952709450 INDEX 3, SIEHE SIB DD+DIS223.07D) SNAPHAT BATTERY (FROM CM+952709450 INDEX 3, SEE SIB DD+DIS223.07E) SNAPHAT BATTERY (A PARTIR DE CM+952709450 INDEX 3, REGARDEZ SIB DD+DIS223.07F)

☐=Assembly
D =Standard part. For order please refer to the separate spare parts list for standard parts "DD+DIS011.93M"
* =No wearing part.

ELECTRONIC PLATE

DOCUMENT CONTROL NOTE:
The controlled version of this document resides on MedNet. Any printed copy of this document is uncontrolled.

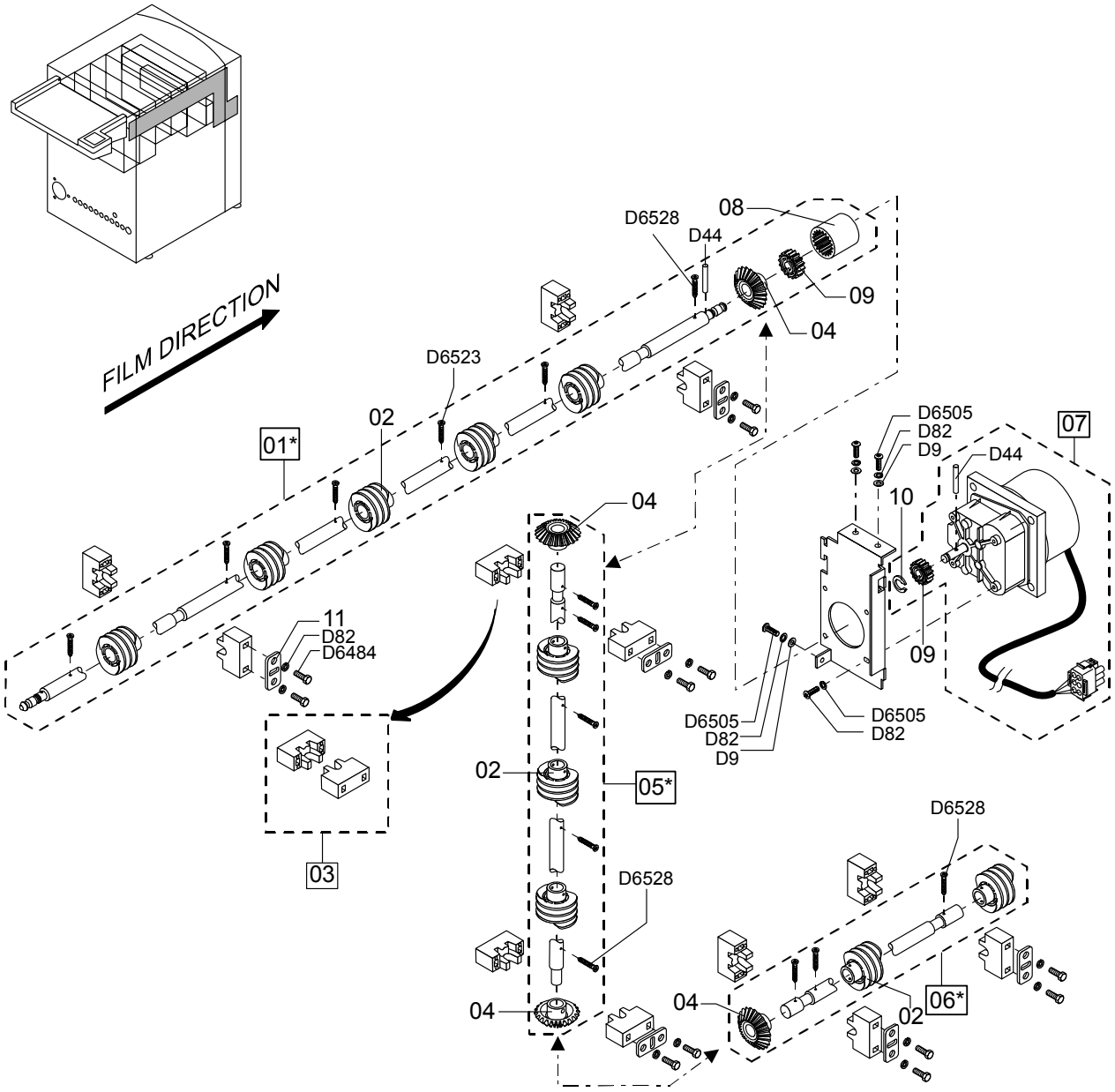

5270_0100_0105_8010.CDR

DOCUMENT CONTROL NOTE:
The controlled version of this document resides on MedNet. Any printed copy of this document is uncontrolled.

Pos. Nr. Item no. Pos. no.	Teile-Nr. Part No. Nr. de Ref.		Benennung Description Denomination
1	CM+9527011502	*	ANTRIEBSWELLE RACKS DRIVE SHAFT RACKS ARBRE D'ENTRAINEMENT RACKS
2	CM+9520061062		SCHNECKE M=2 / Z=2 / RECHTS WORM GEAR M=2 / TEETH=2 / RHS VIS SANS FIN M=2 / DENTS=2 / A DROIT
3	CM+9527011510		LAGER BEARING PALIER
4	CM+9522012731		KEGELRAD BEVEL GEAR ROUE DENTEE
5	CM+9527066402	*	ANTRIEBSACHSE TROCKNER VERTIKAL DRIVE SHAFT DRYER VERTICAL AXE D'ENTRAINEMENT SECHOIR VERTICAL
6	CM+9527066302	*	ANTRIEBSACHSE TROCKNER HORIZONTAL DRIVE SHAFT DRYER HORIZONTAL AXE D'ENTRAINEMENT SECHOIR HORIZONTALE
7	CM+9527015601		MOTOR MIT ZAHNRAD / M=1,5 / Z=15 MOTOR WITH GEAR / M=1,5 / T=15 MOTEUR AVEC ROUE DENTEE / M=1,5 / D=15
8	CM+9839534160		KUPPLUNGSROHR PIPE UNION RACCORD
9	CM+9940211011		GERADSTIRNRAD M=1,5 / Z=15 SPUR GEAR M=1,5 / T=15 ROUE DENTEE M=1,5 / D=15
10	CM+9815762290		SCHEIBE WASHER RONDELLE
11	CM+9527011550		PLATTE FÜR LAGERBEFESTIGUNG PLATE FOR BEARING FASTENING PLAQUE POUR FIXATION DE PALIER

☐=Assembly
D =Standard part. For order please refer to the separate spare parts list for standard parts "DD+DIS011.93M"
* =No wearing part.

DOCUMENT CONTROL NOTE:
The controlled version of this document resides on MedNet. Any printed copy of this document is uncontrolled.

Agfa Company Confidential

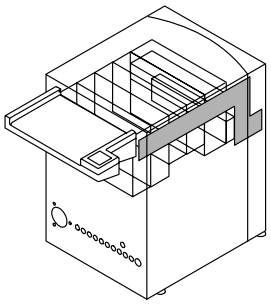

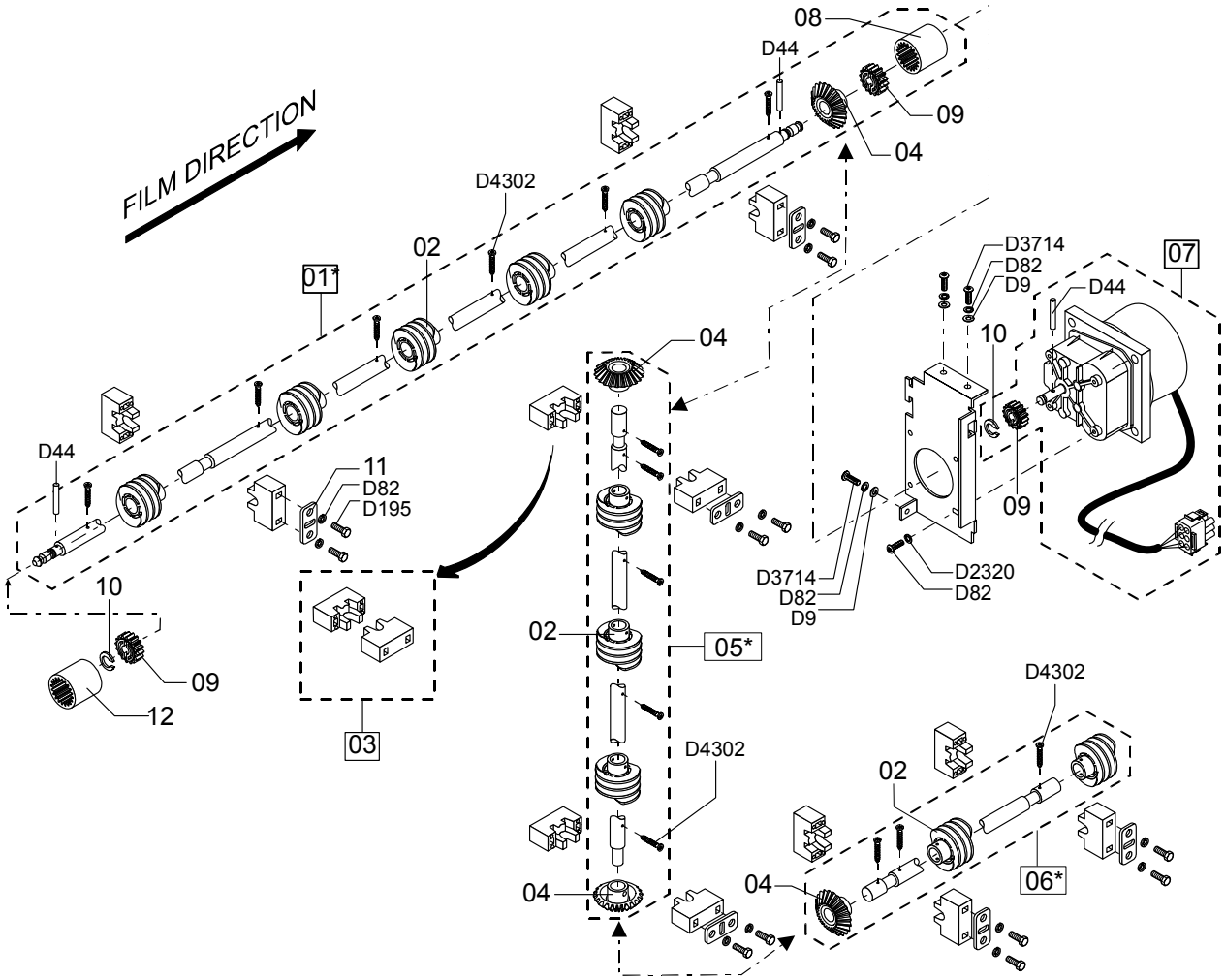

5270_0100_0105_8011.CDR

DOCUMENT CONTROL NOTE:
The controlled version of this document resides on MedNet. Any printed copy of this document is uncontrolled.

Pos. Nr. Item no. Pos. no.	Teile-Nr. Part No. Nr. de Ref.		Benennung Description Denomination
1	CM+9527019700	*	ANTRIEBSWELLE DRIVE SHAFT ARBRE D'ENTRAINEMENT
2	CM+9520061062		SCHNECKE M=2 / Z=2 / RECHTS WORM GEAR M=2 / TEETH=2 / RHS VIS SANS FIN M=2 / DENTS=2 / A DROIT
3	CM+9527011510		LAGER BEARING PALIER
4	CM+9522012731		KEGELRAD BEVEL GEAR ROUE DENTEE
5	CM+9527066402	*	ANTRIEBSACHSE TROCKNER VERTIKAL DRIVE SHAFT DRYER VERTICAL AXE D'ENTRAINEMENT SECHOIR VERTICAL
6	CM+9527066302	*	ANTRIEBSACHSE TROCKNER HORIZONTAL DRIVE SHAFT DRYER HORIZONTAL AXE D'ENTRAINEMENT SECHOIR HORIZONTALE
7	CM+9527015601		MOTOR MIT ZAHNRAD / M=1,5 / Z=15 MOTOR WITH GEAR / M=1,5 / T=15 MOTEUR AVEC ROUE DENTEE / M=1,5 / D=15
8	CM+9839534160		KUPPLUNGSROHR PIPE UNION RACCORD
9	CM+9940211011		GERADSTIRNRAD M=1,5 / Z=15 SPUR GEAR M=1,5 / T=15 ROUE DENTEE M=1,5 / D=15
10	CM+9815762290		SCHEIBE WASHER RONDELLE
11	CM+9527011550		PLATTE FÜR LAGERBEFESTIGUNG PLATE FOR BEARING FASTENING PLAQUE POUR FIXATION DE PALIER
12	CM+9946021082		KUPPLUNGSROHR PIPE UNION RACCORD
13	CM+9839150310		SCHEIBE WASHER RONDELLE

☐=Assembly
D =Standard part. For order please refer to the separate spare parts list for standard parts "DD+DIS011.93M"
* =No wearing part.

DOCUMENT CONTROL NOTE:
The controlled version of this document resides on MedNet. Any printed copy of this document is uncontrolled.

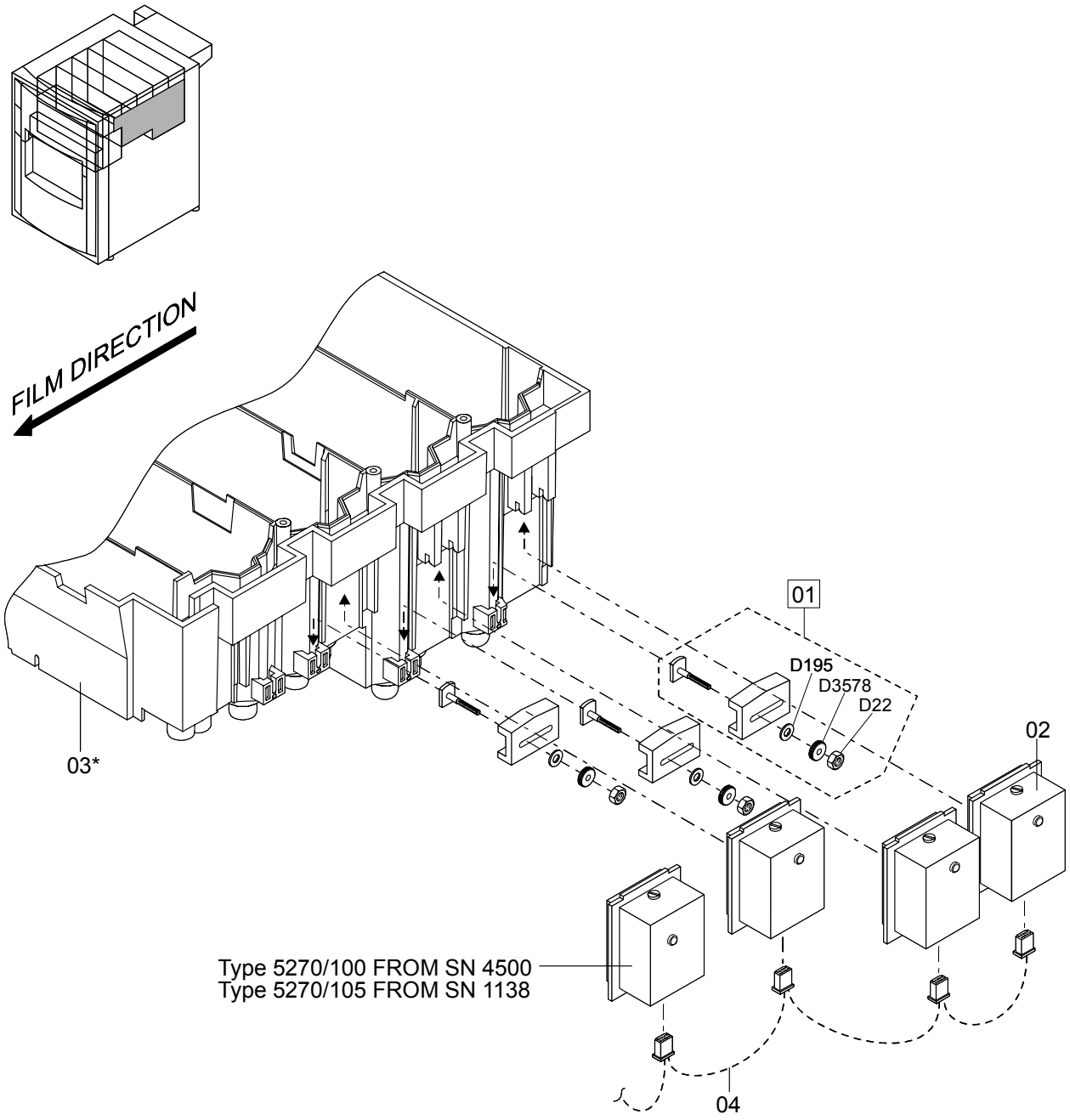

5270_0100_0105_8012.CDR

TANK PUMP DRIVE

DOCUMENT CONTROL NOTE:
The controlled version of this document resides on MedNet. Any printed copy of this document is uncontrolled.

Pos. Nr. Item no. Pos. no.	Teile-Nr. Part No. Nr. de Ref.		Benennung Description Denomination
1	CM+9527090201		BOLZEN BOLT BOULON
2	CM+9043083030		SCHRITTMOTOR DFM 50.1203.7 STEPPER MOTOR DFM 50.1203.7 MOTEUR PAS A PAS DFM 50.1203.7
3	CM+9527041525	*	TANK SPRITZTEIL TANK INJECTION-MOLDED CUVE PIÈCE D'INJECTION-MOLDED
4	CM+9527081900		KABELBAUM DREHFELDMOTORE 5270/100 BIS FN 4499; 5270/105 FN 1137 WIRE HARNESS 5270/100 UP TO SN 4499; 5270/105 SN 1137 HARNAISE DE CABLE 5270/100 JUSQU'AU NS4499; 5270/105 NS1137
4	CM+9527081800		KABELBAUM DREHFELDMOTORE 5270/100 AB FN 4500; 5270/105 FN 1138 WIRE HARNESS 5270/100 FROM SN 4500; 5270/105 SN 1138 HARNAISE DE CABLE 5270/100 A PARTIR DE NS4500; 5270/105 NS1138

☐=Assembly
D =Standard part. For order please refer to the separate spare parts list for standard parts "DD+DIS011.93M"
* =No wearing part.

TANK PUMP DRIVE

DOCUMENT CONTROL NOTE:
The controlled version of this document resides on MedNet. Any printed copy of this document is uncontrolled.

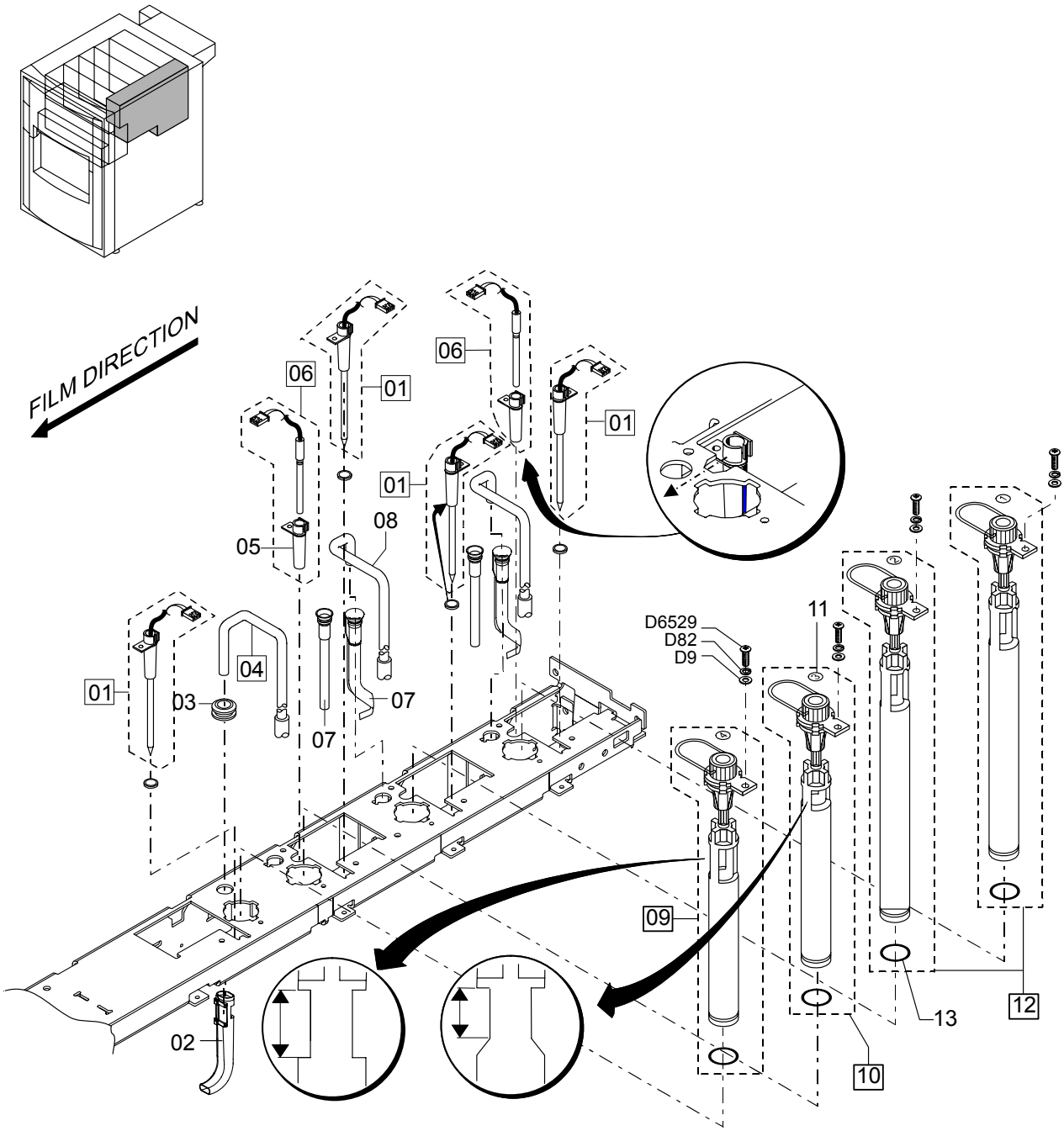

5270_0100_0105_8013.CDR

TANK SUPPLY, DRAIN, SENSOR

DOCUMENT CONTROL NOTE:
The controlled version of this document resides on MedNet. Any printed copy of this document is uncontrolled.

Pos. Nr. Item no. Pos. no.	Teile-Nr. Part No. Nr. de Ref.		Benennung Description Denomination
1	CM+9527091600		NIVEAUSENSOR LEVEL SENSOR CAPTEUR DE NIVEAU
2	CM+9840560040	*	ZULAUFTRICHTER WASSER FEED MOUTH WATER ENTONNOIR D'ARRIVEE EAU
3	CM+9037172700		TÜLLE SLEEVE MANCHON
4	CM+9527048102		ROHRKRÜMMER MIT SCHLAUCH PIPE BEND WITH HOSE RACCORD COUDE AVEC TUYAU FLEXIBLE
5	CM+9527045820		HALTER FÜR NTC-FÜHLER HOLDER FOR NTC SENSOR FIXATION POUR SONDE NTC
6	CM+9527091700		TEMPERATURFÜHLER TEMPERATURE SENSOR PALPEUR DE TEMPERATURE
7	CM+9527045011		EPDM-ZULAUFROHR - TYP 5270/100 AB FN 2331 FEED TUBE - TYPE 5270/100 FROM SN 2331 TUYAU D'ARRIVEE - TYPE 5270/100 A PARTIR DE NS 2331
7	CM+9521021150		ZULAUFROHR - TYP 5270/100 BIS FN 2330 FEED TUBE - TYPE 5270/100 UP TO SN 2330 TUYAU D'ARRIVEE - TYPE 5270/100 JUSQU'AU NS 2330
8	CM+9527045101		ROHRKRÜMMER MIT SCHLAUCH PIPE BEND WITH TUBE RACCORD COUDE AVEC TUYAU
9	CM+9527048301		ABLAUF DRAIN OUTLET EVACUATION
10	CM+9527047300		ABLAUF DRAIN OUTLET EVACUATION
11	CM+9527011041		KLEBESCHILD ADHESIVE LABEL ETIQUETTE ADHÉSIVE
12	CM+9527045300		ABLAUF DRAIN OUTLET EVACUATION
13	CM+9033895240		O-RING O-RING BAGUE EN O

☐=Assembly
D =Standard part. For order please refer to the separate spare parts list for standard parts "DD+DIS011.93M"
* =No wearing part.

TANK SUPPLY, DRAIN, SENSOR

DOCUMENT CONTROL NOTE:
The controlled version of this document resides on MedNet. Any printed copy of this document is uncontrolled.

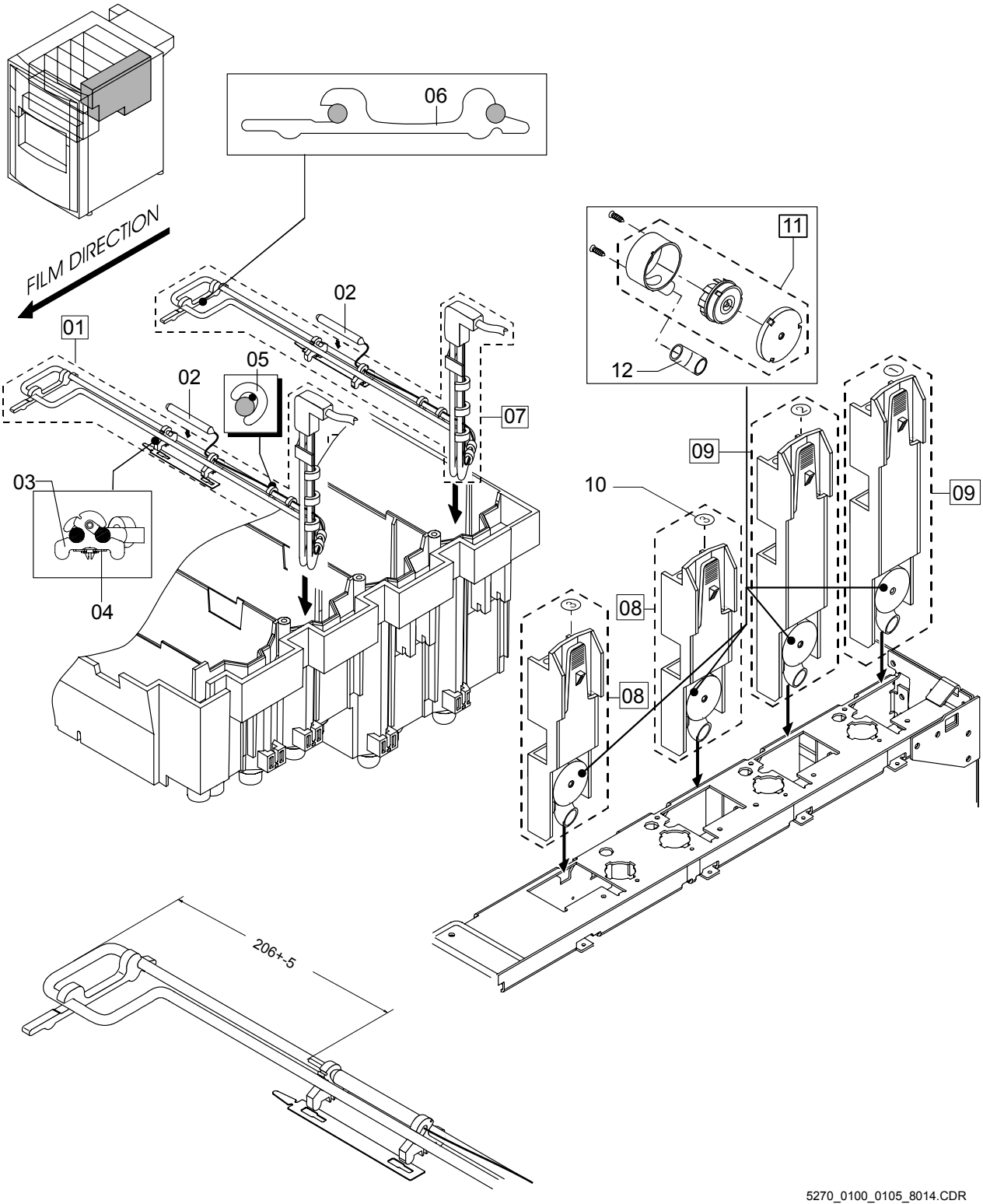

TANK HEATER, CIRCULATION PUMP

DOCUMENT CONTROL NOTE:
The controlled version of this document resides on MedNet. Any printed copy of this document is uncontrolled.

Pos. Nr. Item no. Pos. no.	Teile-Nr. Part No. Nr. de Ref.	Benennung Description Denomination
1	CM+9527047700	HEIZUNG MIT ÜBERHITZUNGSSCHUTZ MONTIERT HEATER WITH THERMAL CUTOUT CHAUFFAGE AVEC PROTECTION DE SURCHAUFFE
2	CM+9042664520	TEMPERATURBEGRENZER 63°C ROSTFREI TEMPERATURE LIMITER 63°C STAINLESS LIMITATEUR DE TEMPERATURE 63°C INOXYDABLE
3	CM+9527045760	HALTEPLATTE HOLDING PLATE PLAQUE DE RETENUE
4	CM+9527045751	ABSTANDSBLECH ROSTFREI SPACER PLATE STAINLESS TÔLE D'ÉCARTEMENT INOXYDABLE
5	CM+9527045770	HALTER FÜR KAPILARROHRHEIZUNG HOLDER FOR CAPILLARY TUBE HEATING FIXATION POUR CHAUFFAGE PAR TUBE CAPILLAIRE
6	CM+9527045781	HALTEPLATTE, LANG HOLDING PLATE, LONG PLAQUE DE RETENUE, LONGUE
7	CM+9527045700	HEIZUNG MIT ÜBERHITZUNGSSCHUTZ MONTIERT HEATER WITH THERMAL CUTOUT CHAUFFAGE AVEC PROTECTION ANTI-SURCHAUFFE
8	CM+9527047403	UMPUMPUNG CIRCULATION PUMP POMPAGE DE CIRCULATION
9	CM+9527045403	UMPUMPUNG CIRCULATION PUMP POMPAGE DE CIRCULATION
10	CM+9527011041	KLEBESCHILD ADHESIVE LABEL ETIQUETTE ADHÉSIVE
11	CM+9521026200	PUMPENGEHÄUSE BLAU PUMP HOUSING BLUE CARTER DE POMPE BLEU
12	CM+9527045430	KNIE ELBOW COUDE

☐=Assembly
D =Standard part. For order please refer to the separate spare parts list for standard parts "DD+DIS011.93M"
* =No wearing part.

DOCUMENT CONTROL NOTE:
The controlled version of this document resides on MedNet. Any printed copy of this document is uncontrolled.

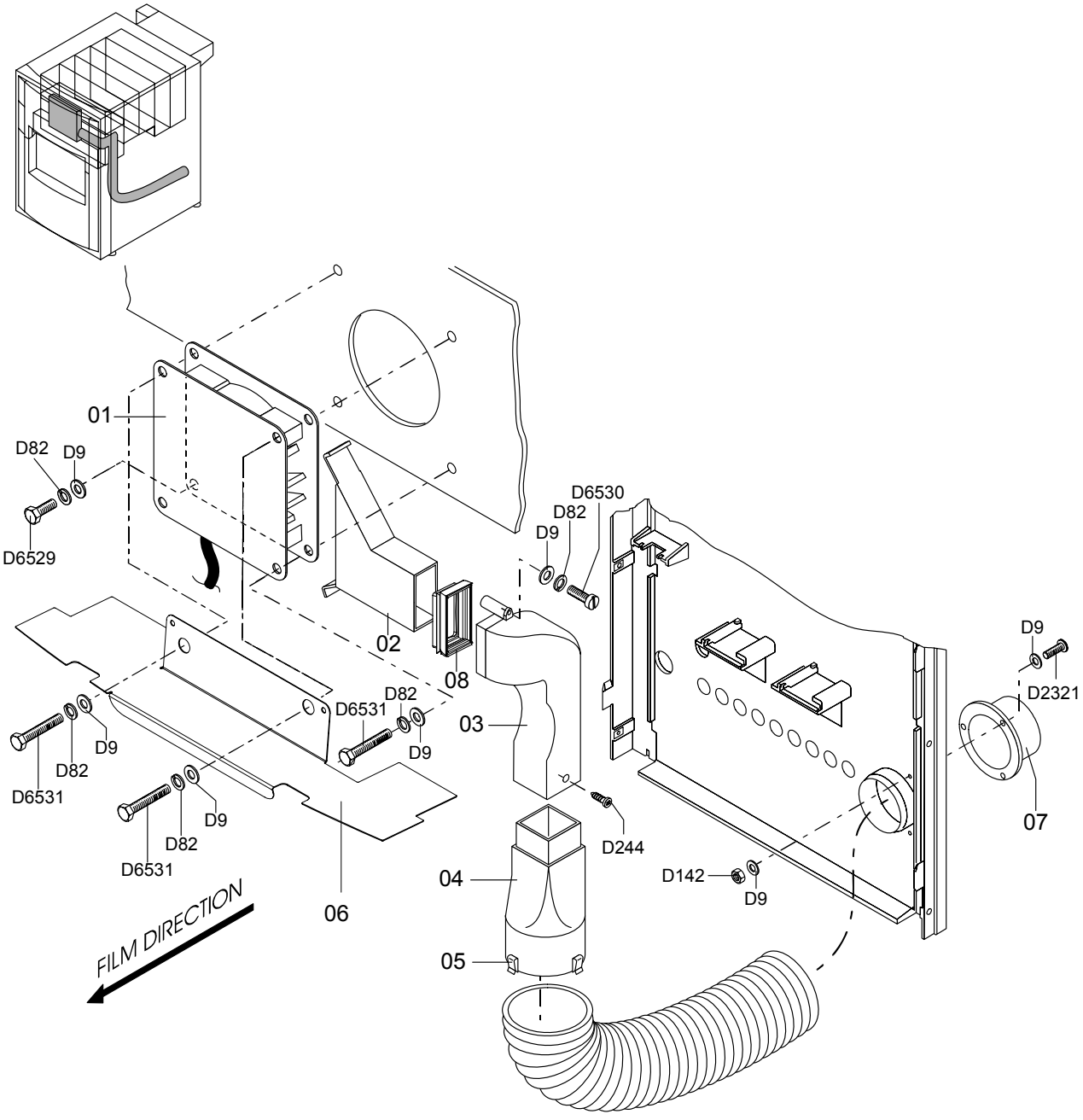

5270_0100_0105_8015.CDR

DOCUMENT CONTROL NOTE:
The controlled version of this document resides on MedNet. Any printed copy of this document is uncontrolled.

Pos. Nr. Item no. Pos. no.	Teile-Nr. Part No. Nr. de Ref.		Benennung Description Denomination
1	CM+9043172270		LÜFTER 24VDC FAN 24VDC VENTILATEUR 24VDC
2	CM+9527069570		ABSAUGKANAL SUCTION CHANNEL CANAL D'ASPIRATION
3	CM+9527011741		ABSAUGKRÜMMER EXTRACTION ELBOW COUDE D'ASPIRATION
4	CM+9527011760		ÜBERGANGSSTÜCK FÜR ABLUFT ADAPTER FOR EXHAUST RACCORD DE RÉDUCTION POUR SORTIE D'AIR
5	CM+9510110080		KABELKLAMMER CABLE CLAMP COLLIER DE SERRAGE
6	CM+9527069360	*	TROCKNER LUFTABDECKUNG DRYER AIR COVER SECHOIR AIR COUVRCLE
7	CM+9522030091		ROHR PIPE TUBE
8	CM+9527069620		KANALDICHTUNG CHANNEL SEAL CANAL JOINT

☐=Assembly
D =Standard part. For order please refer to the separate spare parts list for standard parts "DD+DIS011.93M"
* =No wearing part.

DOCUMENT CONTROL NOTE:
The controlled version of this document resides on MedNet. Any printed copy of this document is uncontrolled.

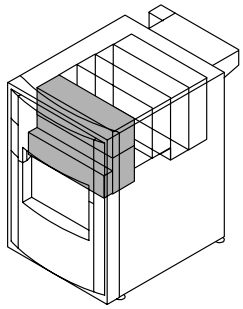

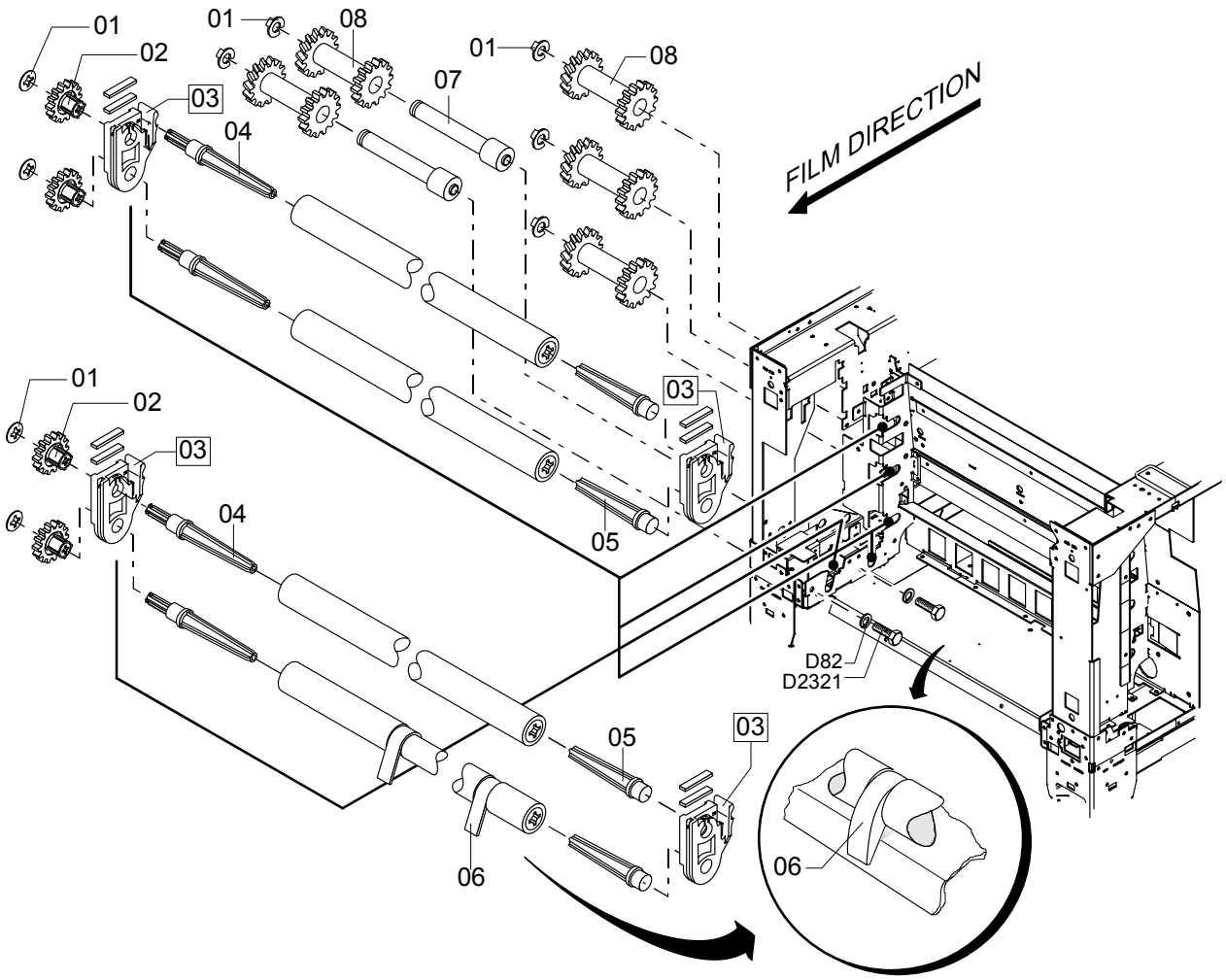

5270_0100_0105_8016.CDR

DOCUMENT CONTROL NOTE:
The controlled version of this document resides on MedNet. Any printed copy of this document is uncontrolled.

Pos. Nr. Item no. Pos. no.	Teile-Nr. Part No. Nr. de Ref.	Benennung Description Denomination
1	CM+9940211290	SICHERUNGSSCHEIBE RETAINER RING RONDELLE D'ARRET
2	CM+9520051321	ZAHNRAD Z=15 / SCHWARZ GEAR WHEEL T=15 / BLACK ROUE DENTEE D=15 / NOIR
3	CM+9527068300	DOPPELLAGER DOUBLE BEARING PALIER DOUBLE
4	CM+9520051412	BOLZEN BOLT BOULON
5	CM+9520051422	BOLZEN BOLT BOULON
6	CM+9527011242	ABWEISER TROCKNERAUSGANG DEFLECTOR DRYER EXIT DEFLECTEUR SORTIE SÉCHOIR
7	CM+9527069160	LAGERBOLZEN MIT GEWINDE BEARING BOLT WITH THREAD BOULON DE PALIER AVEC FILET
8	CM+9521027362	KOMBIRAD Z11/15 SCHWARZ COMBINATION WHEEL Z11/15 BLACK ROUE COMBINEE Z11/15 NOIR

☐=Assembly
D =Standard part. For order please refer to the separate spare parts list for standard parts "DD+DIS011.93M"
* =No wearing part.

DOCUMENT CONTROL NOTE:
The controlled version of this document resides on MedNet. Any printed copy of this document is uncontrolled.

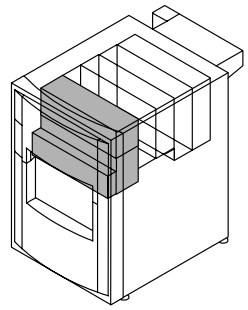

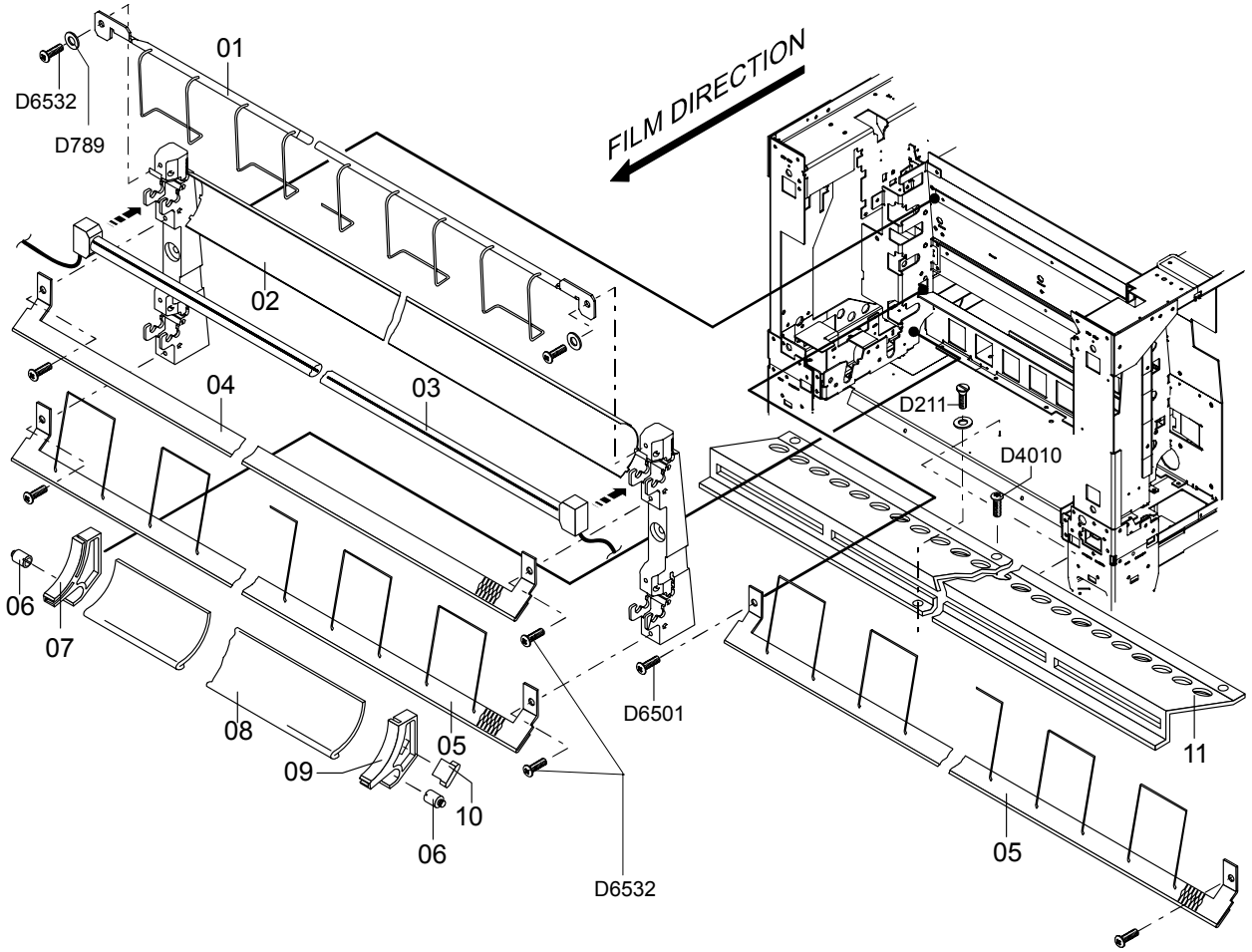

5270_0100_0105_8017.CDR

DOCUMENT CONTROL NOTE:
The controlled version of this document resides on MedNet. Any printed copy of this document is uncontrolled.

Pos. Nr. Item no. Pos. no.	Teile-Nr. Part No. Nr. de Ref.	Benennung Description Denomination
1	CM+9527066802	DRAHTSCHUTZ WIRE PROTECTION PROTECTION DE CONDUCTEUR
2	CM+9522063042	REFLEKTOR REFLECTOR REFLECTEUR
3	CM+9522063102	STRAHLER (400W) RADIATOR (400W) RADIATEUR (400W)
4	CM+9527068172	WINKEL BRACKET EQUERRE
5	CM+9527065802	WINKEL MIT DRAHTSCHUTZ ANGLE WITH WIRE PROTECTION EQUERRE AVEC PROTECTION DE CONDUCTEUR
6	CM+9527069181	BOLZEN BOLT BOULON
7	CM+9520056012	HALTER RECHTS HOLDER RHS FIXATION À DROITE
8	CM+9520056032	LEITBLECH UNTEN GUIDE PLATE BOTTOM TOLE DE GUIDAGE EN BAS
9	CM+9520056022	HALTER LINKS HOLDER LHS FIXATION A GAUCHE
10	CM+9818560232	HALTESTOPFEN STOPPER BOUCHON DE RETENUE
11	CM+9527067242	FILMLEITBLECH UNTEN FILM GUIDE PLATE BOTTOM FILM PLAQUE DE GUIDAGE EN BAS

☐=Assembly
D =Standard part. For order please refer to the separate spare parts list for standard parts "DD+DIS011.93M"
* =No wearing part.

DOCUMENT CONTROL NOTE:
The controlled version of this document resides on MedNet. Any printed copy of this document is uncontrolled.

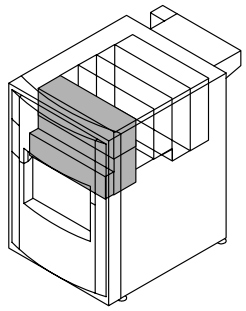

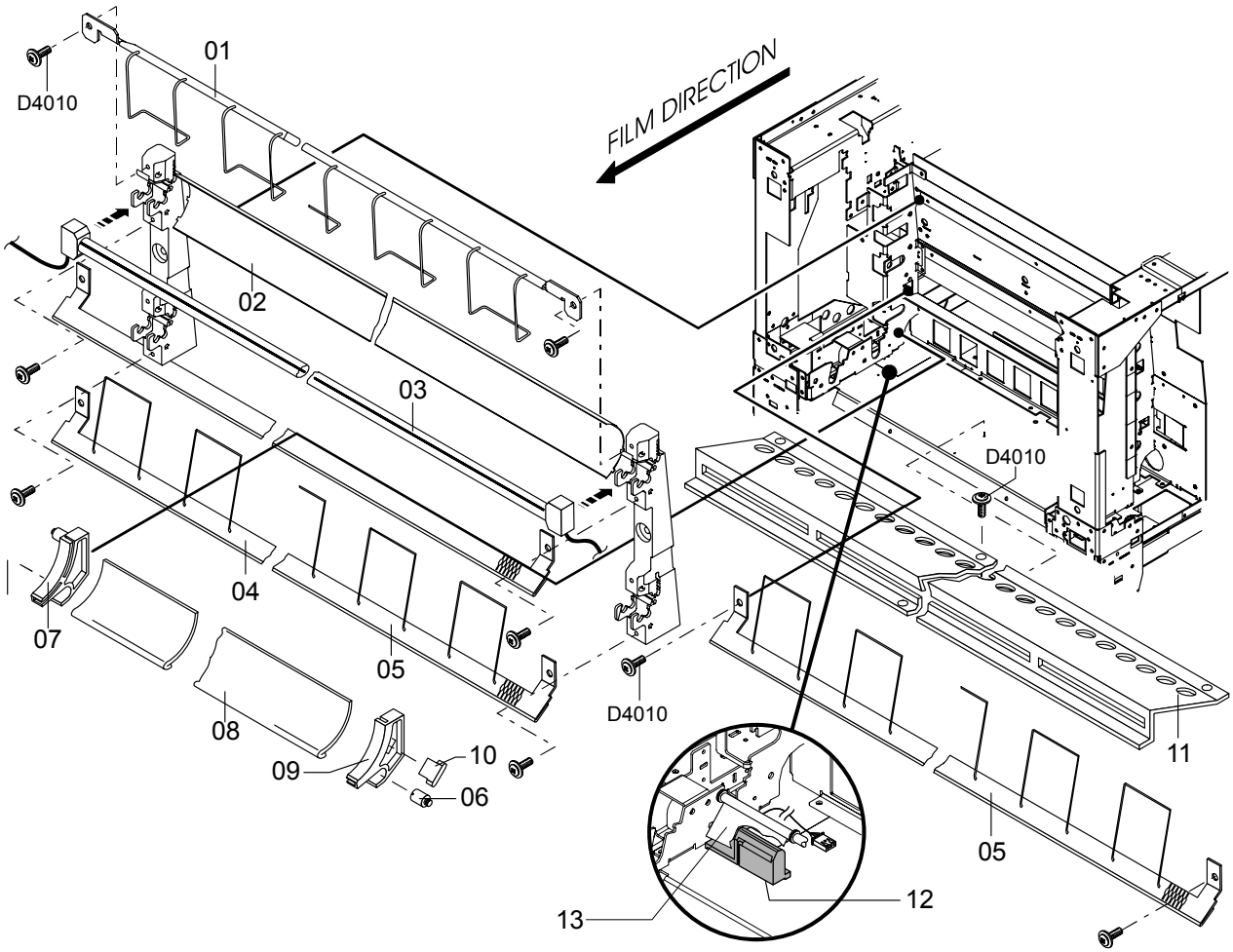

5270_0100_0105_8018.CDR

DOCUMENT CONTROL NOTE:
The controlled version of this document resides on MedNet. Any printed copy of this document is uncontrolled.

Pos. Nr. Item no. Pos. no.	Teile-Nr. Part No. Nr. de Ref.	Benennung Description Denomination
1	CM+9527066802	DRAHTSCHUTZ WIRE PROTECTION PROTECTION DE CONDUCTEUR
2	CM+9522063042	REFLEKTOR REFLECTOR REFLECTEUR
3	CM+9522063102	STRAHLER (400W) RADIATOR (400W) RADIATEUR (400W)
4	CM+9527068172	WINKEL BRACKET EQUERRE
5	CM+9527065802	WINKEL MIT DRAHTSCHUTZ ANGLE WITH WIRE PROTECTION EQUERRE AVEC PROTECTION DE CONDUCTEUR
6	CM+9527069181	BOLZEN BOLT BOULON
7	CM+9520056012	HALTER RECHTS HOLDER RHS FIXATION À DROITE
8	CM+9520056032	LEITBLECH UNTEN GUIDE PLATE BOTTOM TOLE DE GUIDAGE EN BAS
9	CM+9520056022	HALTER LINKS HOLDER LHS FIXATION A GAUCHE
10	CM+9818560232	HALTESTOPFEN STOPPER BOUCHON DE RETENUE
11	CM+9527067242	FILMLEITBLECH UNTEN FILM GUIDE PLATE BOTTOM FILM PLAQUE DE GUIDAGE EN BAS
12	CM+9527012700	HALTER REEDKONTAKT VOLLSTÄNDIG HOLDER REED CONTACT COMPLETE FIXATION CONTACT REED
13	CM+9527018400	KLAPPE VOLLSTÄNDIG FLAP ASSY VOLET COMPL.

☐=Assembly
D =Standard part. For order please refer to the separate spare parts list for standard parts "DD+DIS011.93M"
* =No wearing part.

DOCUMENT CONTROL NOTE:
The controlled version of this document resides on MedNet. Any printed copy of this document is uncontrolled.

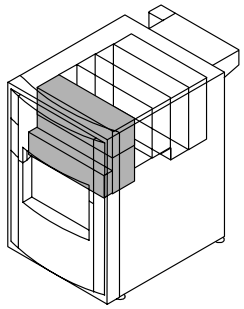

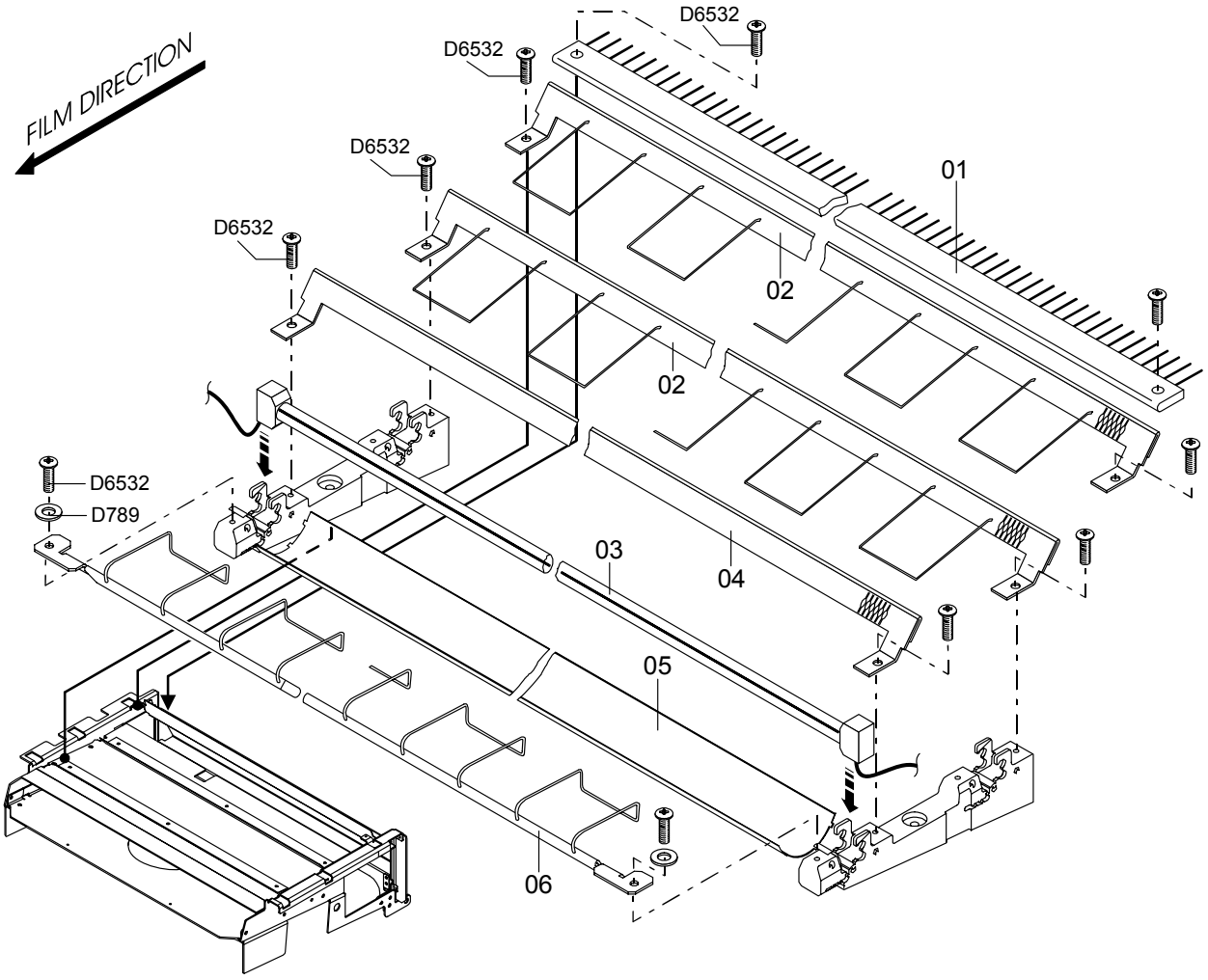

5270_0100_0105_8019.CDR

DRYER FLAP

DOCUMENT CONTROL NOTE:
The controlled version of this document resides on MedNet. Any printed copy of this document is uncontrolled.

Pos. Nr. Item no. Pos. no.	Teile-Nr. Part No. Nr. de Ref.	Benennung Description Denomination
1	CM+9036260360	BÜRSTE (STATISCHE ENTLADUNG) BRUSH (STATIC DISCHARGE) BROSSE (DECHARGE STATIQUE)
2	CM+9527065802	WINKEL MIT DRAHTSCHUTZ ANGLE WITH WIRE PROTECTION EQUERRE AVEC PROTECTION DE CONDUCTEUR
3	CM+9522063102	STRAHLER (400W) RADIATOR (400W) RADIATEUR (400W)
4	CM+9527068172	WINKEL BRACKET EQUERRE
5	CM+9522063042	REFLEKTOR REFLECTOR REFLECTEUR
6	CM+9527066802	DRAHTSCHUTZ WIRE PROTECTION PROTECTION DE CONDUCTEUR

□=Assembly
D =Standard part. For order please refer to the separate spare parts list for standard parts "DD+DIS011.93M"
* =No wearing part.

DOCUMENT CONTROL NOTE:
The controlled version of this document resides on MedNet. Any printed copy of this document is uncontrolled.

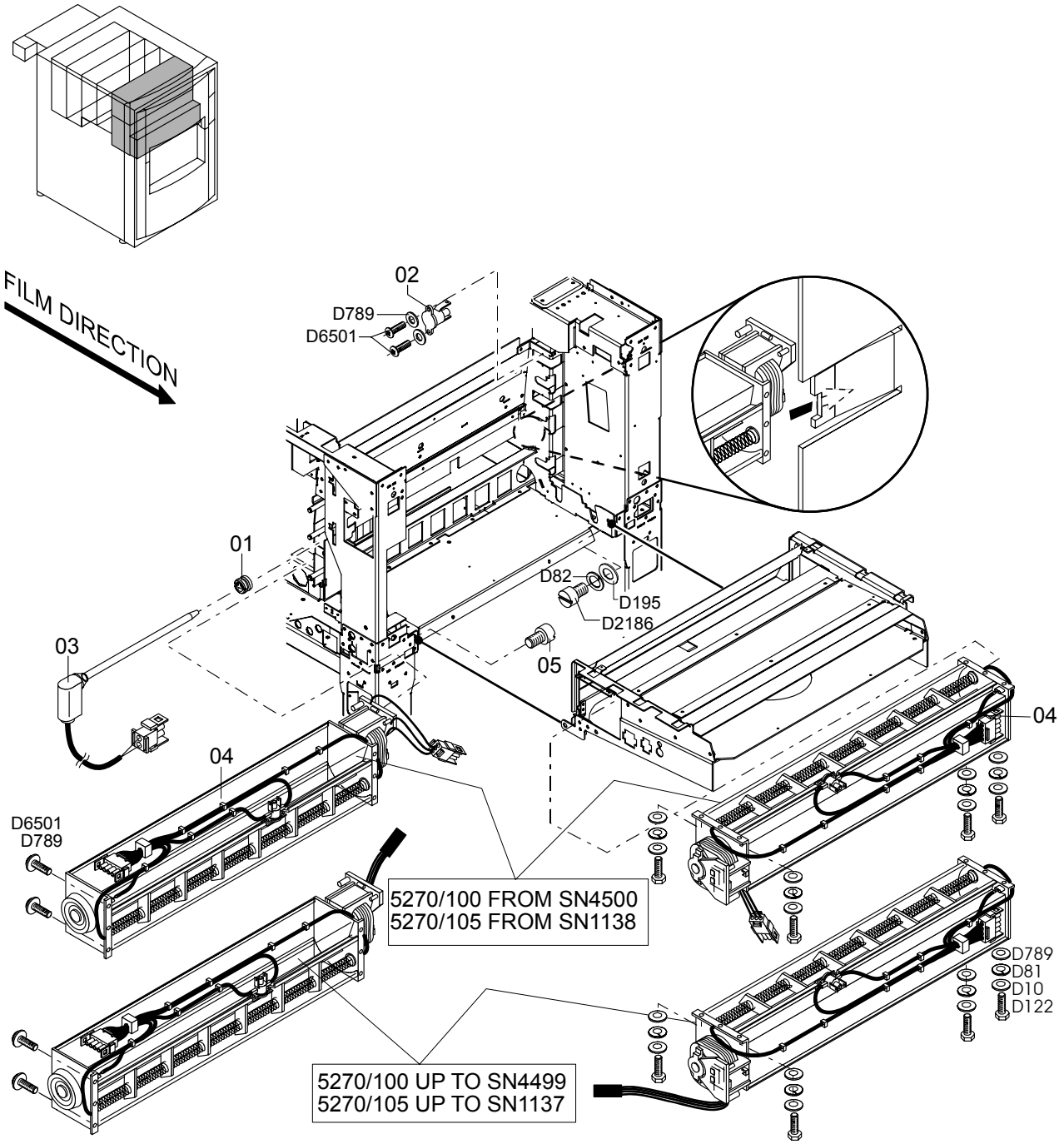

5270_0100_0105_8020.CDR

DRYER FAN

DOCUMENT CONTROL NOTE:
The controlled version of this document resides on MedNet. Any printed copy of this document is uncontrolled.

Pos. Nr. Item no. Pos. no.	Teile-Nr. Part No. Nr. de Ref.	Benennung Description Denomination
1	CM+9037010040	KABELDURCHFÜHRUNG GROMMET PASSE CABLE
2	CM+9042661950	TEMPERATURSCHALTER 95°C TEMPERATURE LIMITER 95°C LIMITATEUR DE TEMPERATURE 95°C
3	CM+9042664090	TEMPERATURFÜHLER TEMPERATURE FEELER PALPEUR DE TEMPERATURE
4	CM+9043172370	QUERSTROMLÜFTER 24V - 5270/100 BIS FN4499; 5270/105 FN1137 CROSS-FLOW FAN 24V - 5270/100 UP TO SN4499; 5270/105 SN1137 VENTILATEUR TANG. 24V - 5270/100 JUSQU'AU NS4499; 5270/105 NS1137
4	CM+9043172360	QUERSTROMLÜFTER 230V - 5270/100 AB FN4500; 5270/105 FN1138 CROSS-FLOW FAN 230V - 5270/100 FROM SN4500; 5270/105 SN1138 VENTILATEUR TANG. 230V - 5270/100 A PARTIR DE NS4500; 5270/105 NS1138
5	CM+9527069520	SCHARNIERBOLZEN HINGE BOLT BOULON DE CHARNIERE
6	CM+9527071200	VERBINDUNGSLEITUNG 24V LÜFTER - 5270/100 BIS FN4499; 5270/105 FN1137 CONNECTION CABLE FAN - 5270/100 UP TO SN4499; 5270/105 SN1137 LIGNE DE RACORDEMENT VENT. - 5270/100 JUSQU'AU NS4499; 5270/105 NS1137

☐=Assembly
D =Standard part. For order please refer to the separate spare parts list for standard parts "DD+DIS011.93M"
* =No wearing part.

DOCUMENT CONTROL NOTE:
The controlled version of this document resides on MedNet. Any printed copy of this document is uncontrolled.

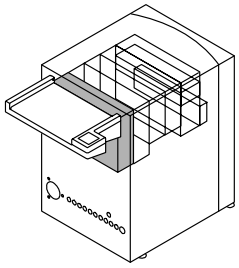

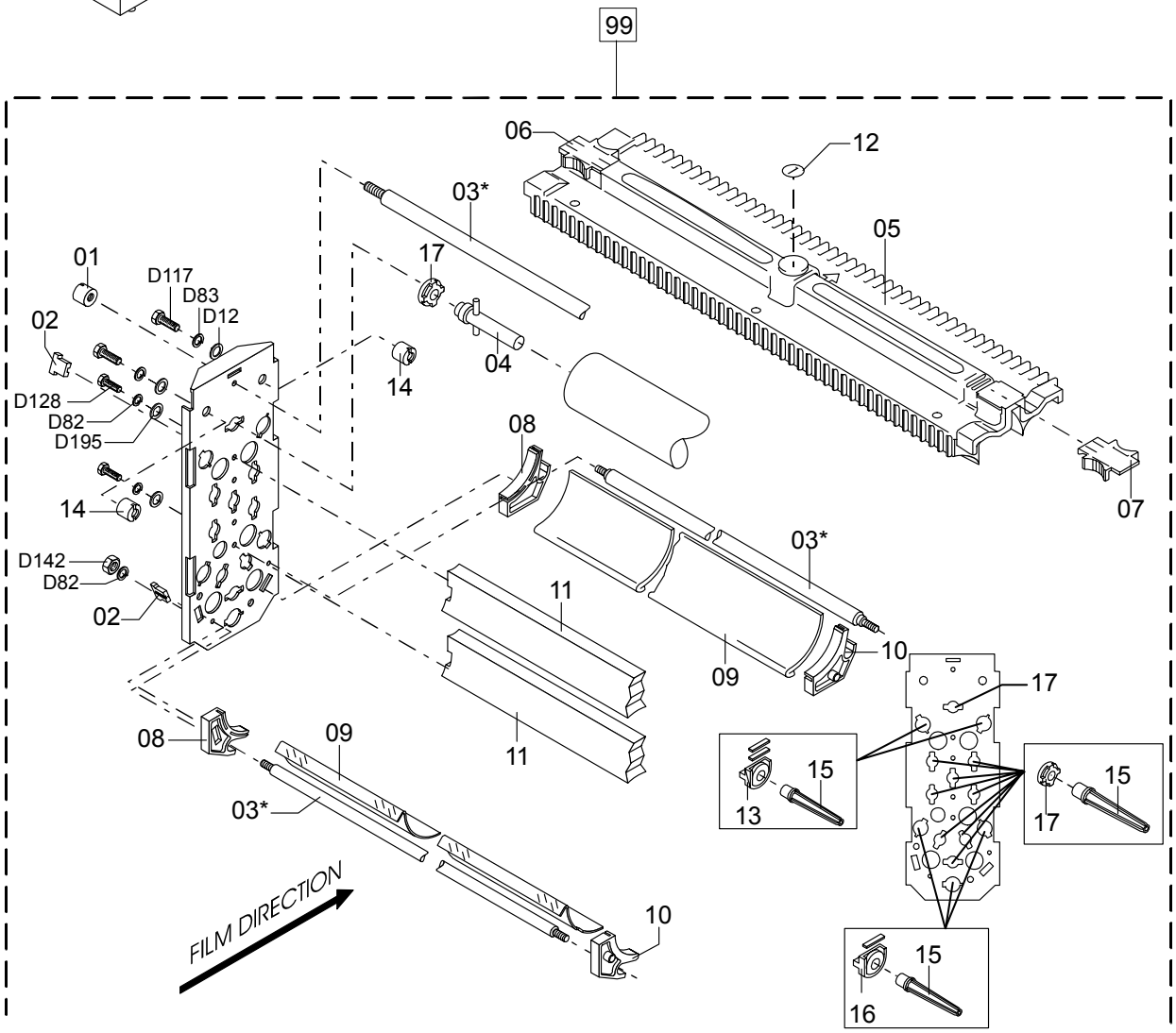

5270_0100_0105_8021.CDR

DEVELOPER RACK

DOCUMENT CONTROL NOTE:
The controlled version of this document resides on MedNet. Any printed copy of this document is uncontrolled.

Pos. Nr. Item no. Pos. no.	Teile-Nr. Part No. Nr. de Ref.		Benennung Description Denomination
1	CM+9521081040		BOLZEN BOLT BOULON
2	CM+9818560232		HALTESTOPFEN STOPPER BOUCHON DE RETENUE
3	CM+9520051141	*	ZUGANKER TIE ROD TIRANT D'ANCRAGE
4	CM+9520052700		BOLZEN BOLT BOULON
5	CM+9521081070		LEITELEMENT-E GUIDE ELEMENT-E TRACEUR-E
6	CM+9521081050		SCHIEBER SLIDE GLISSIERE
7	CM+9520054021		SCHIEBER SLIDE GLISSIERE
8	CM+9520056022		HALTER LINKS HOLDER LHS FIXATION A GAUCHE
9	CM+9520056032		LEITBLECH UNTEN GUIDE PLATE BOTTOM TOLE DE GUIDAGE EN BAS
10	CM+9520056012		HALTER RECHTS HOLDER RHS FIXATION À DROITE
11	CM+9520051165		LEITELEMENT MITTE GUIDE ELEMENT MIDDLE ELEMENT GUIDE AU MILIEU
12	CM+9527011041		KLEBESCHILD ADHESIVE LABEL ETIQUETTE ADHÉSIVE
13	CM+9522056700		LAGER 2-FACH ANGEFEDERT BEARING DOUBLE SPRING LOADED PALIER A DOUBLE SUSPENSION
14	CM+9520055020		BOLZEN (Ø 13MM) BOLT (Ø 13MM) BOULON (Ø 13MM)
15	CM+9520051422		BOLZEN BOLT BOULON
16	CM+9520052600		LAGER 1-FACH ANGEFEDERT BEARING SINGLE SPRING LOADED PALIER SUSPENSION SIMPLE
17	CM+9520051190		LAGER BEARING PALIER
99	CM+9527081004		ENTWICKLERRACK DEVELOPER RACK RACK DU REVELATEUR

☐=Assembly
D =Standard part. For order please refer to the separate spare parts list for standard parts "DD+DIS011.93M"
* =No wearing part.

DEVELOPER RACK

DOCUMENT CONTROL NOTE:
The controlled version of this document resides on MedNet. Any printed copy of this document is uncontrolled.

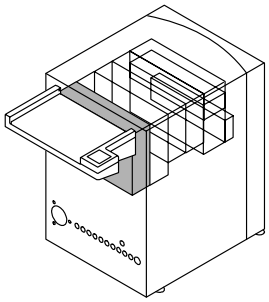

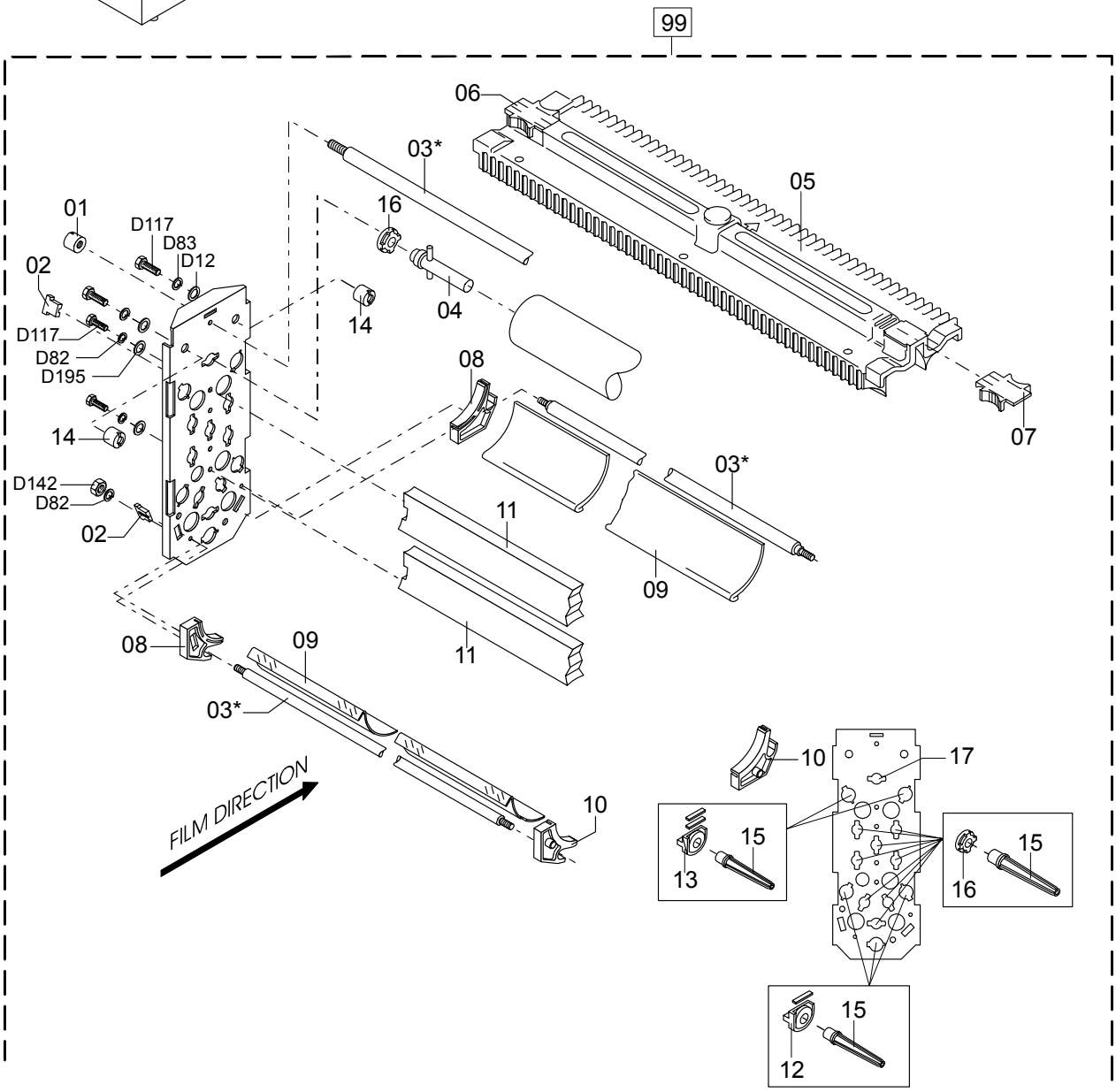

5270_0100_0105_8022.CDR

DEVELOPER RACK

DOCUMENT CONTROL NOTE:
The controlled version of this document resides on MedNet. Any printed copy of this document is uncontrolled.

Pos. Nr. Item no. Pos. no.	Teile-Nr. Part No. Nr. de Ref.		Benennung Description Denomination
1	CM+9521081040		BOLZEN BOLT BOULON
2	CM+9818560232		HALTESTOPFEN STOPPER BOUCHON DE RETENUE
3	CM+9520051141	*	ZUGANKER TIE ROD TIRANT D'ANCRAGE
4	CM+9520052700		BOLZEN BOLT BOULON
5	CM+9521081070		LEITELEMENT-E GUIDE ELEMENT-E TRACEUR-E
6	CM+9521081050		SCHIEBER SLIDE GLISSIERE
7	CM+9520054021		SCHIEBER SLIDE GLISSIERE
8	CM+9520056022		HALTER LINKS HOLDER LHS FIXATION A GAUCHE
9	CM+9520056032		LEITBLECH UNTEN GUIDE PLATE BOTTOM TOLE DE GUIDAGE EN BAS
10	CM+9520056012		HALTER RECHTS HOLDER RHS FIXATION À DROITE
11	CM+9520051165		LEITELEMENT MITTE GUIDE ELEMENT MIDDLE ELEMENT GUIDE AU MILIEU
12	CM+9520052600		LAGER 1-FACH ANGEFEDERT BEARING SINGLE SPRING LOADED PALIER SUSPENSION SIMPLE
13	CM+9522056700		LAGER 2-FACH ANGEFEDERT BEARING DOUBLE SPRING LOADED PALIER A DOUBLE SUSPENSION
14	CM+9520055020		BOLZEN (Ø 13MM) BOLT (Ø 13MM) BOULON (Ø 13MM)
15	CM+9520051422		BOLZEN BOLT BOULON
16	CM+9520051190		LAGER BEARING PALIER
99	CM+9527081400		ENTWICKLERRACK ENTWICKLERRACK DEVELOPER RACK DEVELOPER RACK RACK REVELATEUR RACK REVELATEUR

☐=Assembly
D =Standard part. For order please refer to the separate spare parts list for standard parts "DD+DIS011.93M"
* =No wearing part.

DOCUMENT CONTROL NOTE:
The controlled version of this document resides on MedNet. Any printed copy of this document is uncontrolled.

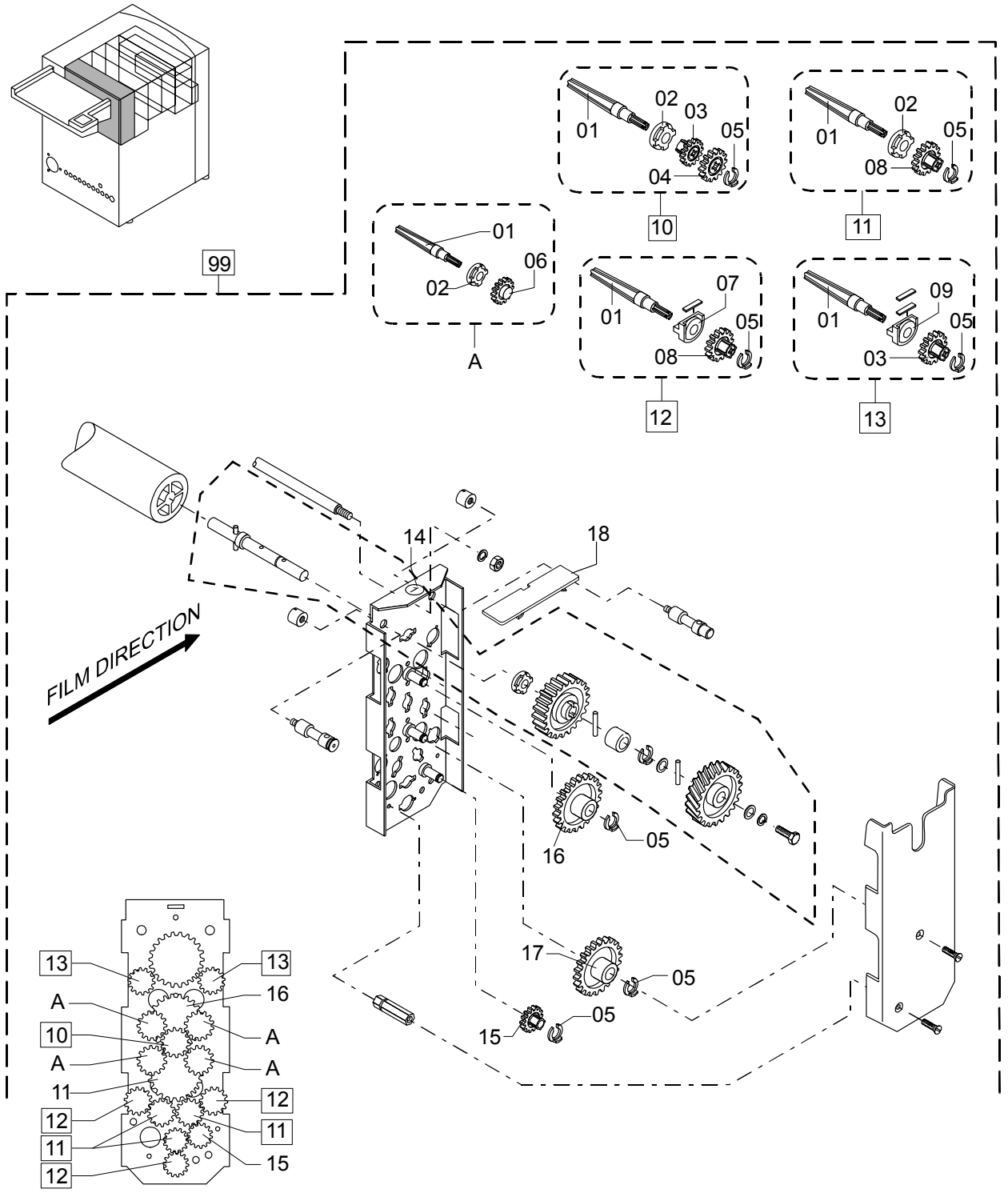

5270_0100_0105_8023a.CDR

DEVELOPER RACK DRIVE (1/2)

DOCUMENT CONTROL NOTE:
The controlled version of this document resides on MedNet. Any printed copy of this document is uncontrolled.

Pos. Nr. Item no. Pos. no.	Teile-Nr. Part No. Nr. de Ref.	Benennung Description Denomination
1	CM+9520051412	BOLZEN BOLT BOULON
2	CM+9520051190	LAGER BEARING PALIER
3	CM+9520051321	ZAHNRAD Z=15 / SCHWARZ GEAR WHEEL T=15 / BLACK ROUE DENTEE D=15 / NOIR
4	CM+9520051360	ZAHNRAD Z=18 / SCHWARZ GEAR WHEEL T=18 / BLACK ROUE DENTEE D=18 / NOIR
5	CM+9940211290	SICHERUNGSSCHEIBE RETAINER RING RONDELLE D'ARRET
6	CM+9520051370	ZAHNRAD Z=18 / SCHWARZ GEAR WHEEL T=18 / BLACK ROUE DENTEE D=18 / NOIR
7	CM+9520052600	LAGER 1-FACH ANGEFEDERT BEARING SINGLE SPRING LOADED PALIER SUSPENSION SIMPLE
8	CM+9521081320	ZAHNRAD M=1,5 / Z=15 / GRAU GEAR M=1,5 / T=15 / GRAY ROUE DENTEE M=1,5 / D=15 / GRIS
9	CM+9522056700	LAGER 2-FACH ANGEFEDERT BEARING DOUBLE SPRING LOADED PALIER A DOUBLE SUSPENSION
□ 10	CM+9520052502	BOLZEN VOLLSTÄNDIG BOLT COMPLETE BOULON COMPLET
□ 11	CM+9521081400	BOLZEN BOLT BOULON
□ 12	CM+9521081300	BOLZEN BOLT BOULON
□ 13	CM+9522056601	BOLZEN BOLT BOULON
14	CM+9527011041	KLEBESCHILD ADHESIVE LABEL ETIQUETTE ADHÉSIVE
15	CM+9520051380	ZAHNRAD M=1,5 / Z=15 / SCHWARZ GEAR M=1,5 / T=15 / BLACK ROUE DENTEE M=1,5 / D=15 / NOIR
16	CM+9520051330	ZAHNRAD M=1,5 / Z=24 / SCHWARZ GEAR M=1,5 / T=24 / BLACK ROUE DENTEE M=1,5 / D=24 / NOIR
17	CM+9520051340	ZAHNRAD Z=28 / SCHWARZ GEAR WHEEL T=28 / BLACK ROUE DENTEE D=28 / NOIR
18	CM+9527081211	RACKABDECKUNG COVER RACK RECOUVREMENT RACK

□=Assembly
D =Standard part. For order please refer to the separate spare parts list for standard parts "DD+DIS011.93M"
* =No wearing part.

DEVELOPER RACK DRIVE (1/2)

DOCUMENT CONTROL NOTE:
The controlled version of this document resides on MedNet. Any printed copy of this document is uncontrolled.

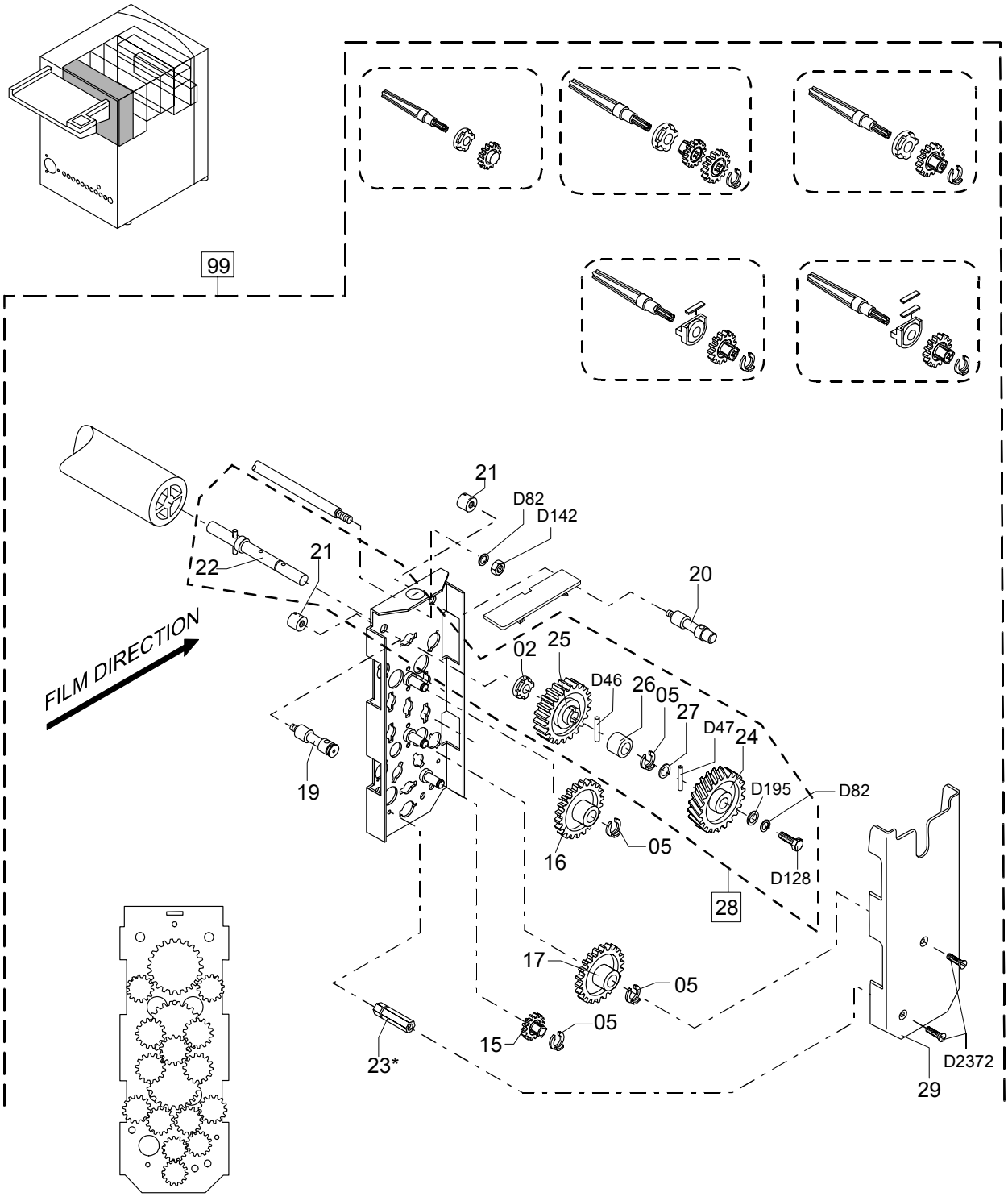

5270_0100_0105_8023b.CDR

DEVELOPER RACK DRIVE (2/2)

DOCUMENT CONTROL NOTE:
The controlled version of this document resides on MedNet. Any printed copy of this document is uncontrolled.

Pos. Nr. Item no. Pos. no.	Teile-Nr. Part No. Nr. de Ref.		Benennung Description Denomination
19	CM+9520051030		BOLZEN BOLT BOULON
20	CM+9520051041		BOLZEN BOLT BOULON
21	CM+9520055020		BOLZEN (Ø 13MM) BOLT (Ø 13MM) BOULON (Ø 13MM)
22	CM+9520052800		BOLZEN BOLT BOULON
23	CM+9521281110	*	BOLZEN BOLT BOULON
24	CM+9520051311		SCHRÄGSTIRNRAD M=2 / Z=24 / SCHWARZ HELICAL SPUR GEAR M=2 / T=24 / BLACK ROUE HELICOIDALE M=2 / D=24 / NOIR
25	CM+9520051350		ZAHNRAD M=1,5 / Z=32 / SCHWARZ GEAR M=1,5 / T=32 / BLACK ROUE DENTEE M=1,5 / D=32 / NOIR
26	CM+9520051460		BUCHSE BUSHING DOUILLE
27	CM+9815762250		SCHEIBE WASHER RONDELLE
□ 28	CM+9520052403		BOLZEN VOLLSTÄNDIG BOLT COMPLETE BOULON COMPLET
29	CM+9520051492		DECKEL COVER COUVERCLE
□ 99	CM+9527081004		ENTWICKLERRACK DEVELOPER RACK RACK DU REVELATEUR

□=Assembly
D =Standard part. For order please refer to the separate spare parts list for standard parts "DD+DIS011.93M"
* =No wearing part.

DEVELOPER RACK DRIVE (2/2)

DOCUMENT CONTROL NOTE:
The controlled version of this document resides on MedNet. Any printed copy of this document is uncontrolled.

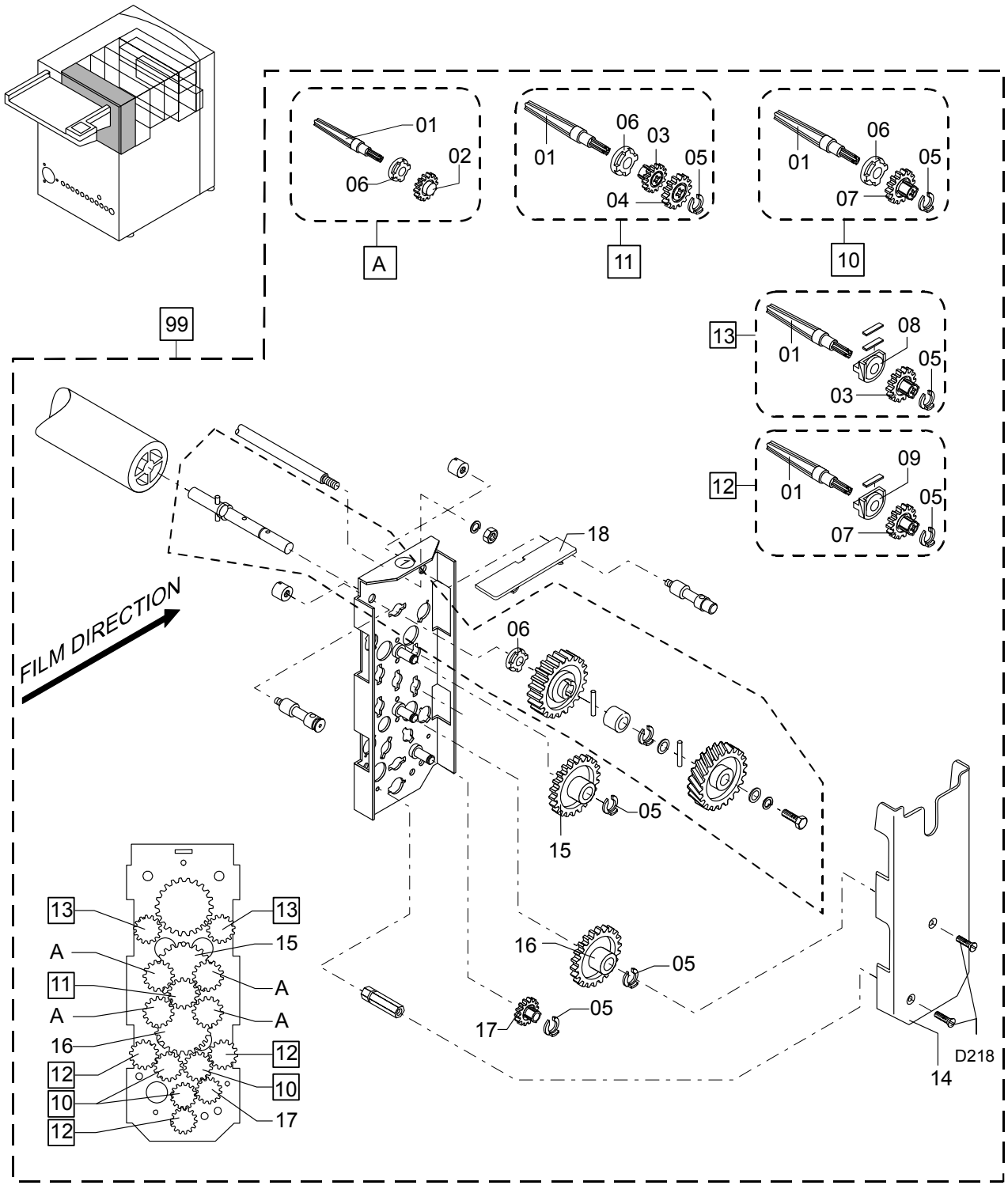

5270_0100_0105_8024a.CDR

DEVELOPER RACK DRIVE (1/2)

DOCUMENT CONTROL NOTE:
The controlled version of this document resides on MedNet. Any printed copy of this document is uncontrolled.

Pos. Nr. Item no. Pos. no.	Teile-Nr. Part No. Nr. de Ref.	Benennung Description Denomination
1	CM+9520051412	BOLZEN BOLT BOULON
2	CM+9520051370	ZAHNRAD Z=18 / SCHWARZ GEAR WHEEL T=18 / BLACK ROUE DENTEE D=18 / NOIR
3	CM+9520051321	ZAHNRAD Z=15 / SCHWARZ GEAR WHEEL T=15 / BLACK ROUE DENTEE D=15 / NOIR
4	CM+9520051360	ZAHNRAD Z=18 / SCHWARZ GEAR WHEEL T=18 / BLACK ROUE DENTEE D=18 / NOIR
5	CM+9940211290	SICHERUNGSSCHEIBE RETAINER RING RONDELLE D'ARRET
6	CM+9520051190	LAGER BEARING PALIER
7	CM+9521081320	ZAHNRAD M=1,5 / Z=15 / GRAU GEAR M=1,5 / T=15 / GRAY ROUE DENTEE M=1,5 / D=15 / GRIS
8	CM+9522056700	LAGER 2-FACH ANGEFEDERT BEARING DOUBLE SPRING LOADED PALIER A DOUBLE SUSPENSION
9	CM+9520052600	LAGER 1-FACH ANGEFEDERT BEARING SINGLE SPRING LOADED PALIER SUSPENSION SIMPLE
10	CM+9521081400	BOLZEN BOLT BOULON
11	CM+9520052502	BOLZEN VOLLSTÄNDIG BOLT COMPLETE BOULON COMPLET
12	CM+9521081300	BOLZEN BOLT BOULON
13	CM+9522056601	BOLZEN BOLT BOULON
14	CM+9520051492	DECKEL COVER COUVERCLE
15	CM+9520051330	ZAHNRAD M=1,5 / Z=24 / SCHWARZ GEAR M=1,5 / T=24 / BLACK ROUE DENTEE M=1,5 / D=24 / NOIR
16	CM+9520051340	ZAHNRAD Z=28 / SCHWARZ GEAR WHEEL T=28 / BLACK ROUE DENTEE D=28 / NOIR
17	CM+9520051380	ZAHNRAD M=1,5 / Z=15 / SCHWARZ GEAR M=1,5 / T=15 / BLACK ROUE DENTEE M=1,5 / D=15 / NOIR
18	CM+9527081211	RACKABDECKUNG COVER RACK RECOUVREMENT RACK

☐=Assembly
D =Standard part. For order please refer to the separate spare parts list for standard parts "DD+DIS011.93M"
* =No wearing part.

DEVELOPER RACK DRIVE (1/2)

DOCUMENT CONTROL NOTE:
The controlled version of this document resides on MedNet. Any printed copy of this document is uncontrolled.

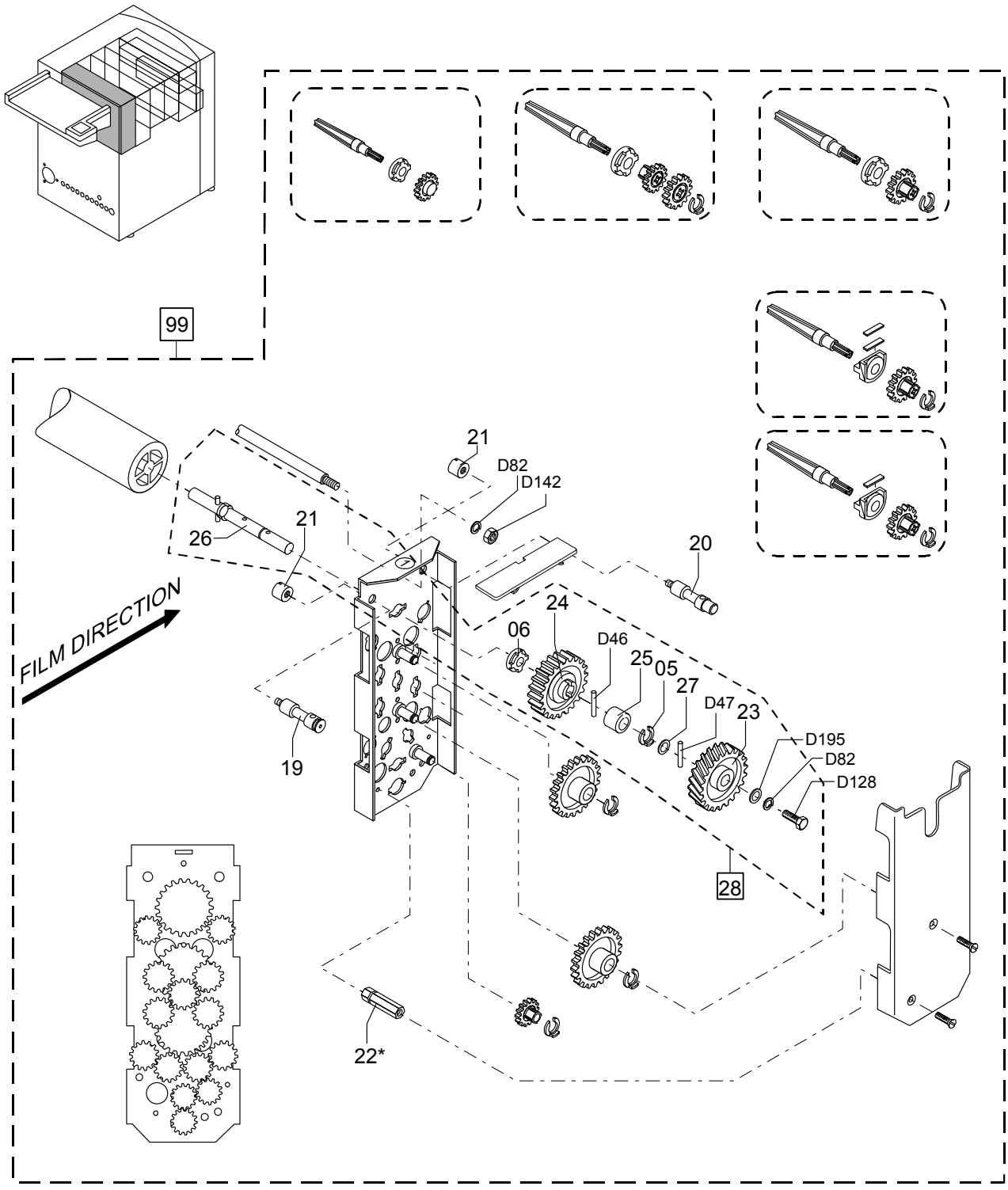

5270_0100_0105_8024b.CDR

DEVELOPER RACK DRIVE (2/2)

DOCUMENT CONTROL NOTE:
The controlled version of this document resides on MedNet. Any printed copy of this document is uncontrolled.

Pos. Nr. Item no. Pos. no.	Teile-Nr. Part No. Nr. de Ref.		Benennung Description Denomination
19	CM+9520051030		BOLZEN BOLT BOULON
20	CM+9520051041		BOLZEN BOLT BOULON
21	CM+9520055020		BOLZEN (Ø 13MM) BOLT (Ø 13MM) BOULON (Ø 13MM)
22	CM+9521281110	*	BOLZEN BOLT BOULON
23	CM+9520051311		SCHRÄGSTIRNRAD M=2 / Z=24 / SCHWARZ HELICAL SPUR GEAR M=2 / T=24 / BLACK ROUE HELICOIDALE M=2 / D=24 / NOIR
24	CM+9520051350		ZAHNRAD M=1,5 / Z=32 / SCHWARZ GEAR M=1,5 / T=32 / BLACK ROUE DENTEE M=1,5 / D=32 / NOIR
25	CM+9520051460		BUCHSE BUSHING DOUILLE
26	CM+9520052800		BOLZEN BOLT BOULON
27	CM+9815762250		SCHEIBE WASHER RONDELLE
28	CM+9520052403		BOLZEN VOLLSTÄNDIG BOLT COMPLETE BOULON COMPLET
99	CM+9527081400		ENTWICKLERRACK DEVELOPER RACK RACK REVELATEUR

☐=Assembly
D =Standard part. For order please refer to the separate spare parts list for standard parts "DD+DIS011.93M"
* =No wearing part.

DEVELOPER RACK DRIVE (2/2)

DOCUMENT CONTROL NOTE:
The controlled version of this document resides on MedNet. Any printed copy of this document is uncontrolled.

Agfa Company Confidential

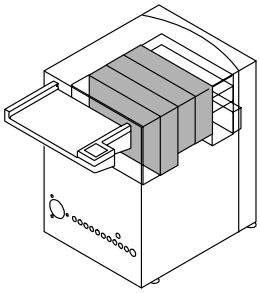

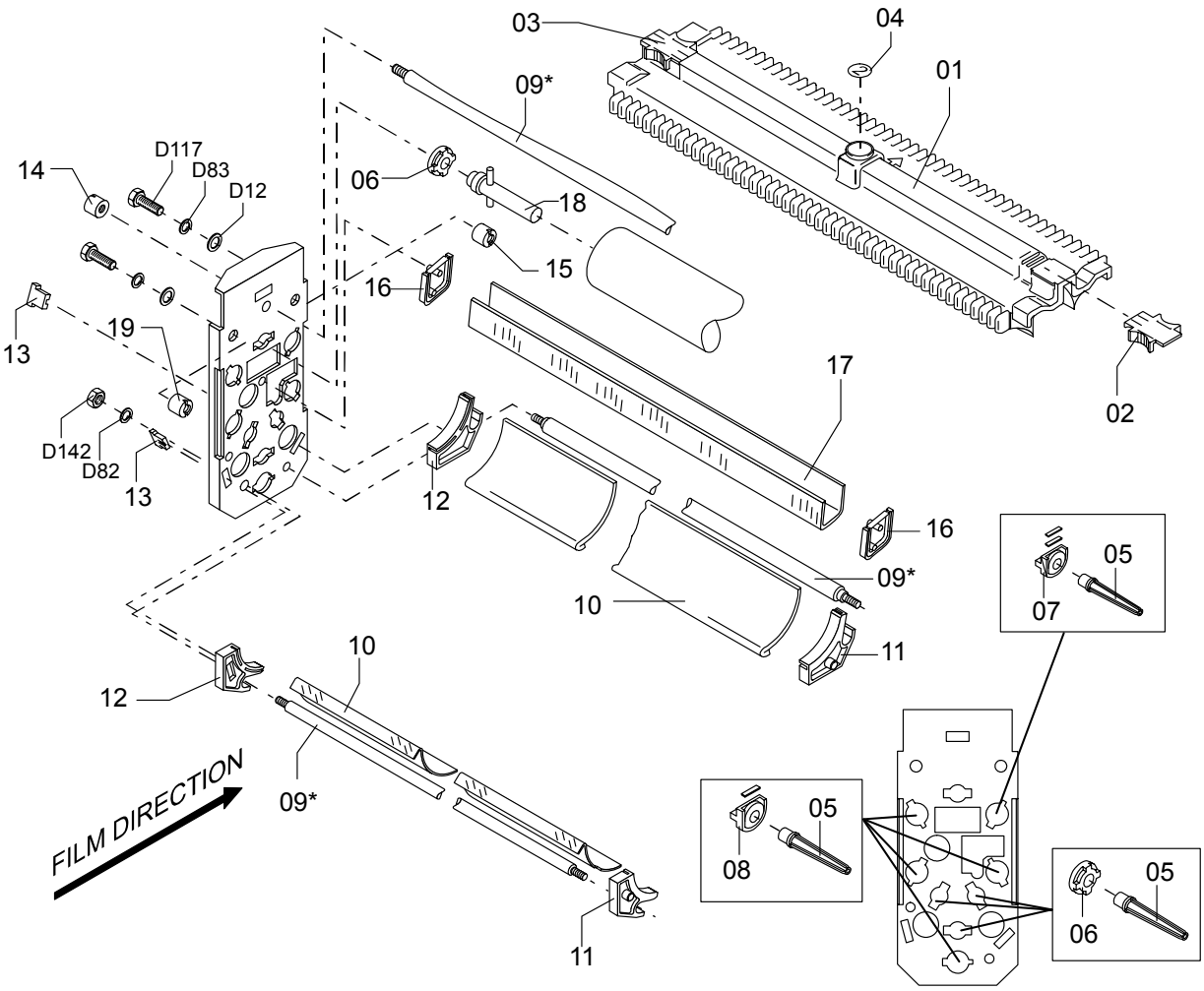

5270_0100_0105_8025.CDR

FIXING RACK 1/2 / WATER RACK

DOCUMENT CONTROL NOTE:
The controlled version of this document resides on MedNet. Any printed copy of this document is uncontrolled.

Pos. Nr. Item no. Pos. no.	Teile-Nr. Part No. Nr. de Ref.		Benennung Description Denomination
1	CM+9520055012		LEITELEMENT GUIDE ELEMENT ELEMENT GUIDE
2	CM+9520054021		SCHIEBER SLIDE GLISSIERE
3	CM+9521081050		SCHIEBER SLIDE GLISSIERE
4	CM+9527011041		KLEBESCHILD ADHESIVE LABEL ETIQUETTE ADHÉSIVE
5	CM+9520051422		BOLZEN BOLT BOULON
6	CM+9520051190		LAGER BEARING PALIER
7	CM+9522056700		LAGER 2-FACH ANGEFEDERT BEARING DOUBLE SPRING LOADED PALIER A DOUBLE SUSPENSION
8	CM+9520052600		LAGER 1-FACH ANGEFEDERT BEARING SINGLE SPRING LOADED PALIER SUSPENSION SIMPLE
9	CM+9520051141	*	ZUGANKER TIE ROD TIRANT D'ANCRAGE
10	CM+9520056032		LEITBLECH UNTEN GUIDE PLATE BOTTOM TOLE DE GUIDAGE EN BAS
11	CM+9520056012		HALTER RECHTS HOLDER RHS FIXATION À DROITE
12	CM+9520056022		HALTER LINKS HOLDER LHS FIXATION A GAUCHE
13	CM+9818560232		HALTESTOPFEN STOPPER BOUCHON DE RETENUE
14	CM+9521081040		BOLZEN BOLT BOULON
15	CM+9520051051		BOLZEN (Ø 12MM) BOLT (Ø 12MM) BOULON (Ø 12MM)
16	CM+9522056030		KLOTZ BLOCK BLOC
17	CM+9522056041		LEITELEMENT GUIDE ELEMENT ELEMENT GUIDE
18	CM+9520052700		BOLZEN BOLT BOULON
19	CM+9520055020		BOLZEN (Ø 13MM) BOLT (Ø 13MM) BOULON (Ø 13MM)

☐=Assembly

D =Standard part. For order please refer to the separate spare parts list for standard parts "DD+DIS011.93M"

* =No wearing part.

FIXING RACK 1/2 / WATER RACK

DOCUMENT CONTROL NOTE:
The controlled version of this document resides on MedNet. Any printed copy of this document is uncontrolled.

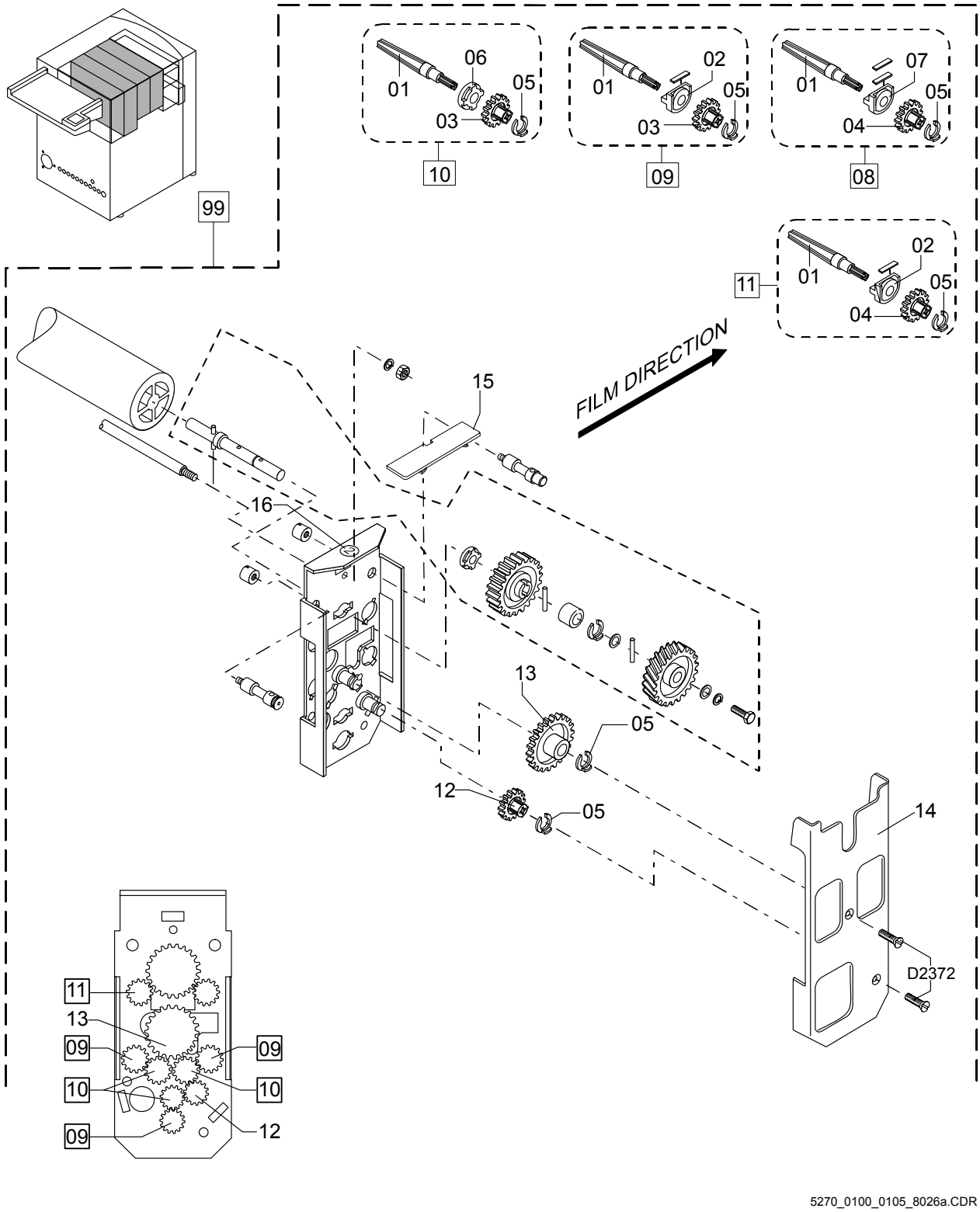

5270_0100_0105_8026a.CDR

FIXING RACK 1/2 / WATER RACK DRIVE (1/2)

DOCUMENT CONTROL NOTE:
The controlled version of this document resides on MedNet. Any printed copy of this document is uncontrolled.

Pos. Nr. Item no. Pos. no.	Teile-Nr. Part No. Nr. de Ref.	Benennung Description Denomination
1	CM+9520051412	BOLZEN BOLT BOULON
2	CM+9520052600	LAGER 1-FACH ANGEFEDERT BEARING SINGLE SPRING LOADED PALIER SUSPENSION SIMPLE
3	CM+9521081320	ZAHNRAD M=1,5 / Z=15 / GRAU GEAR M=1,5 / T=15 / GRAY ROUE DENTEE M=1,5 / D=15 / GRIS
4	CM+9520051321	ZAHNRAD Z=15 / SCHWARZ GEAR WHEEL T=15 / BLACK ROUE DENTEE D=15 / NOIR
5	CM+9940211290	SICHERUNGSSCHEIBE RETAINER RING RONDELLE D'ARRET
6	CM+9520051190	LAGER BEARING PALIER
7	CM+9522056700	LAGER 2-FACH ANGEFEDERT BEARING DOUBLE SPRING LOADED PALIER A DOUBLE SUSPENSION
8	CM+9522056601	BOLZEN BOLT BOULON
9	CM+9521081300	BOLZEN BOLT BOULON
10	CM+9521081400	BOLZEN BOLT BOULON
11	CM+9520052202	BOLZEN VOLLSTÄNDIG BOLT COMPLETE BOULON COMPLET
12	CM+9520051380	ZAHNRAD M=1,5 / Z=15 / SCHWARZ GEAR M=1,5 / T=15 / BLACK ROUE DENTEE M=1,5 / D=15 / NOIR
13	CM+9520051330	ZAHNRAD M=1,5 / Z=24 / SCHWARZ GEAR M=1,5 / T=24 / BLACK ROUE DENTEE M=1,5 / D=24 / NOIR
14	CM+9522056021	DECKEL COVER COUVERCLE
15	CM+9527081211	RACKABDECKUNG COVER RACK RECOUVREMENT RACK
16	CM+9527011041	KLEBESCHILD ADHESIVE LABEL ETIQUETTE ADHÉSIVE

☐=Assembly
D =Standard part. For order please refer to the separate spare parts list for standard parts "DD+DIS011.93M"
* =No wearing part.

FIXING RACK 1/2 / WATER RACK DRIVE (1/2)

DOCUMENT CONTROL NOTE:
The controlled version of this document resides on MedNet. Any printed copy of this document is uncontrolled.

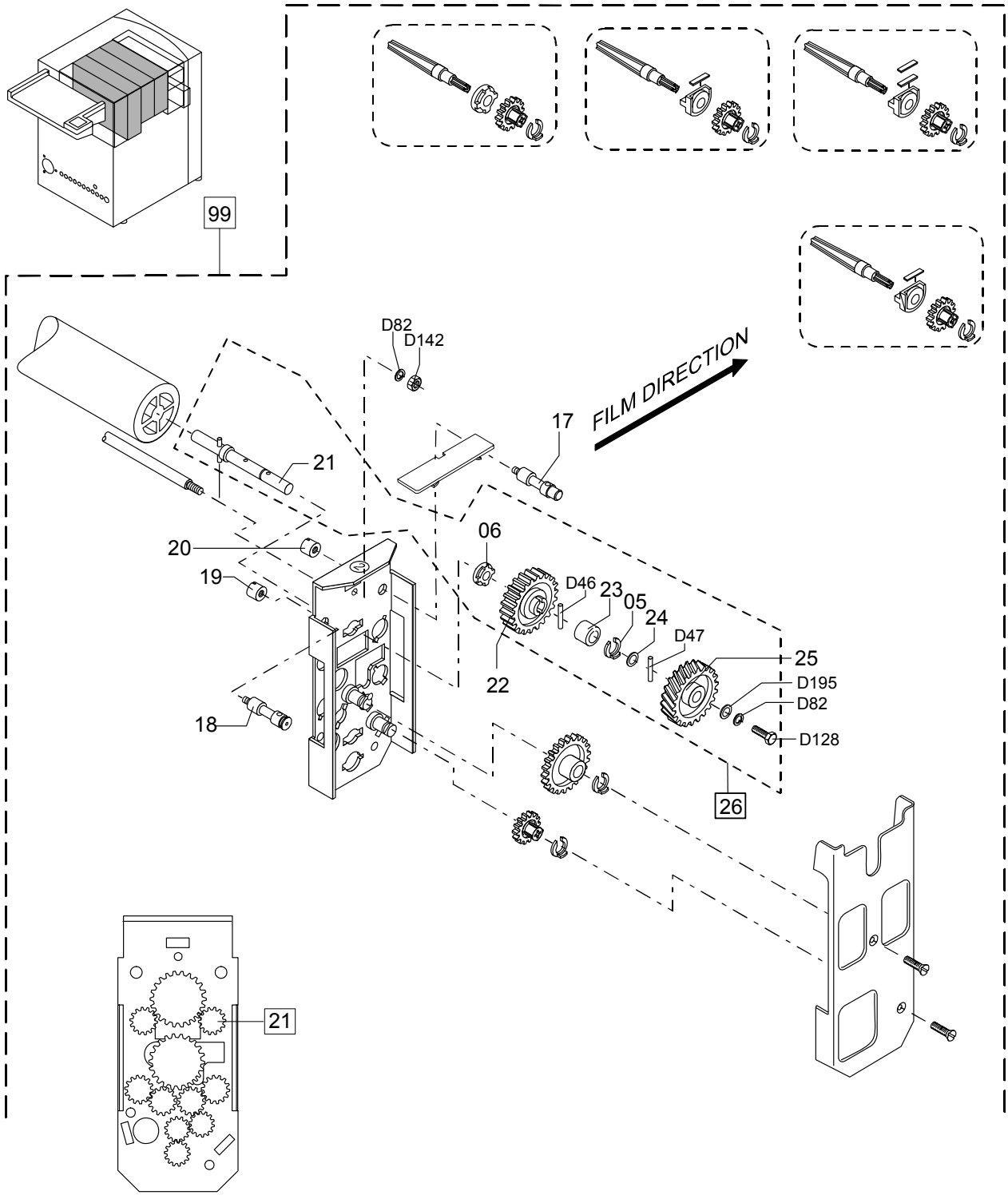

FIXING RACK 1/2 / WATER RACK DRIVE (2/2)

DOCUMENT CONTROL NOTE:
The controlled version of this document resides on MedNet. Any printed copy of this document is uncontrolled.

Pos. Nr. Item no. Pos. no.	Teile-Nr. Part No. Nr. de Ref.	Benennung Description Denomination
17	CM+9520051030	BOLZEN BOLT BOULON
18	CM+9520051041	BOLZEN BOLT BOULON
19	CM+9520055020	BOLZEN (Ø 13MM) BOLT (Ø 13MM) BOULON (Ø 13MM)
20	CM+9520051051	BOLZEN (Ø 12MM) BOLT (Ø 12MM) BOULON (Ø 12MM)
21	CM+9520052800	BOLZEN BOLT BOULON
22	CM+9520051350	ZAHNRAD M=1,5 / Z=32 / SCHWARZ GEAR M=1,5 / T=32 / BLACK ROUE DENTEE M=1,5 / D=32 / NOIR
23	CM+9520051460	BUCHSE BUSHING DOUILLE
24	CM+9815762250	SCHEIBE WASHER RONDELLE
25	CM+9520051311	SCHRÄGSTIRNRAD M=2 / Z=24 / SCHWARZ HELICAL SPUR GEAR M=2 / T=24 / BLACK ROUE HELICOIDALE M=2 / D=24 / NOIR
□ 26	CM+9520052403	BOLZEN VOLLSTÄNDIG BOLT COMPLETE BOULON COMPLET
□ 99	CM+9527082004	FIXIERRACK 1/2, WASSERRACK FIXER RACK 1/2, WATERRACK RACK FIXATEUR 1/2, RACK D'EAU

□=Assembly
D =Standard part. For order please refer to the separate spare parts list for standard parts "DD+DIS011.93M"
* =No wearing part.

FIXING RACK 1/2 / WATER RACK DRIVE (2/2)

DOCUMENT CONTROL NOTE:
The controlled version of this document resides on MedNet. Any printed copy of this document is uncontrolled.

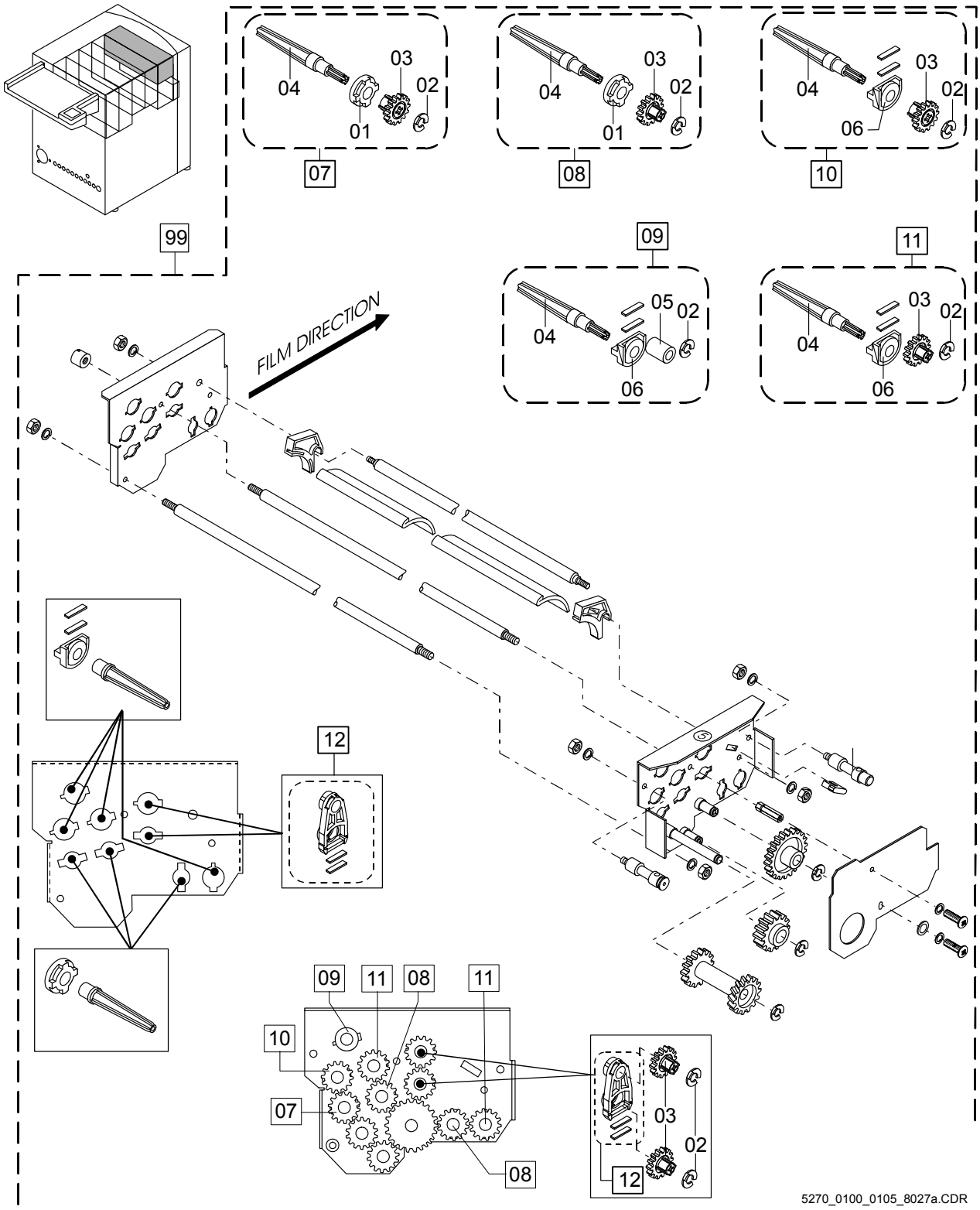

DISTRIBUTOR UNIT (1/2)

DOCUMENT CONTROL NOTE:
The controlled version of this document resides on MedNet. Any printed copy of this document is uncontrolled.

Pos. Nr. Item no. Pos. no.	Teile-Nr. Part No. Nr. de Ref.	Benennung Description Denomination
1	CM+9520051190	LAGER BEARING PALIER
2	CM+9940211290	SICHERUNGSSCHEIBE RETAINER RING RONDELLE D'ARRET
3	CM+9520051321	ZAHNRAD Z=15 / SCHWARZ GEAR WHEEL T=15 / BLACK ROUE DENTEE D=15 / NOIR
4	CM+9520051412	BOLZEN BOLT BOULON
5	CM+9839180370	BUCHSE BUSHING DOUILLE
6	CM+9522061700	LAGER 2-FACH ANGEFEDERT BEARING DOUBLE SPRING LOADED PALIER A DOUBLE SUSPENSION
□ 7	CM+9522061901	BOLZEN BOLT BOULON
□ 8	CM+9522061401	BOLZEN BOLT BOULON
□ 9	CM+9521084200	BOLZEN BOLT BOULON
□ 10	CM+9522061801	BOLZEN BOLT BOULON
□ 11	CM+9522061301	BOLZEN BOLT BOULON
□ 12	CM+9521283602	DOPPELLAGER 2-FACH GEFEDERT DOUBLE BEARING DOUBLE SPRING LOADED PALIER A DOUBLE SUSPENSION

□=Assembly
D =Standard part. For order please refer to the separate spare parts list for standard parts "DD+DIS011.93M"
* =No wearing part.

DISTRIBUTOR UNIT (1/2)

DOCUMENT CONTROL NOTE:
The controlled version of this document resides on MedNet. Any printed copy of this document is uncontrolled.

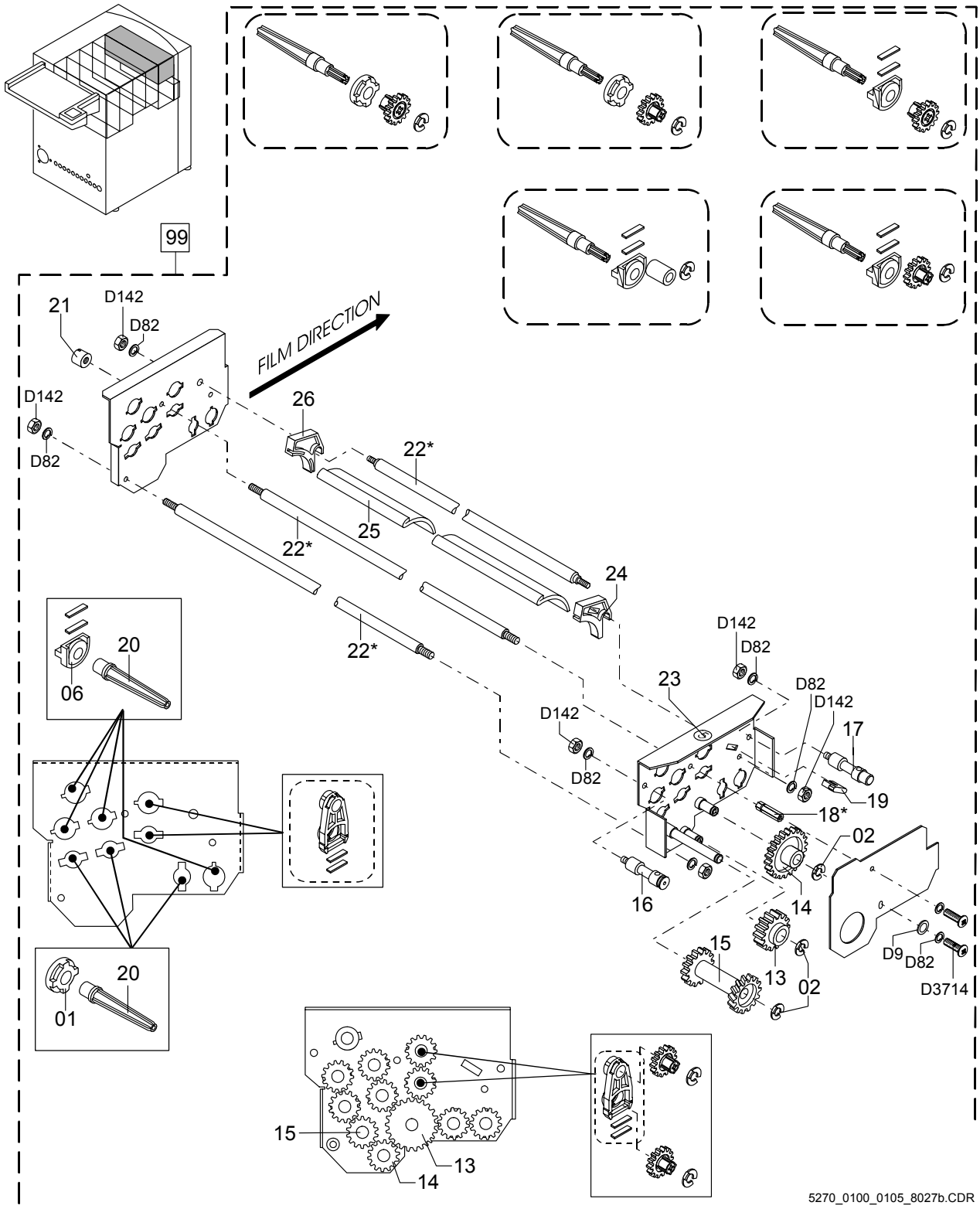

DISTRIBUTOR UNIT (2/2)

DOCUMENT CONTROL NOTE:
The controlled version of this document resides on MedNet. Any printed copy of this document is uncontrolled.

Pos. Nr. Item no. Pos. no.	Teile-Nr. Part No. Nr. de Ref.		Benennung Description Denomination
13	CM+9839180760		ZAHNRAD M=1,5 / Z=15 GEAR M=1,5 / T=15 ROUE DENTEE M=1,5 / D=15
14	CM+9520051330		ZAHNRAD M=1,5 / Z=24 / SCHWARZ GEAR M=1,5 / T=24 / BLACK ROUE DENTEE M=1,5 / D=24 / NOIR
15	CM+9521027362		KOMBIRAD Z11/15 SCHWARZ COMBINATION WHEEL Z11/15 BLACK ROUE COMBINEE Z11/15 NOIR
16	CM+9520051030		BOLZEN BOLT BOULON
17	CM+9520051041		BOLZEN BOLT BOULON
18	CM+9521281110	*	BOLZEN BOLT BOULON
19	CM+9818560232		HALTESTOPFEN STOPPER BOUCHON DE RETENUE
20	CM+9520051422		BOLZEN BOLT BOULON
21	CM+9521081040		BOLZEN BOLT BOULON
22	CM+9527282040	*	ZUGANKER - 5270/100 AB FN2328; 5270/105 FN1048 TIE ROD - 5270/100 FROM SN2328; 5270/105 SN1048 TIRANT - 5270/100 A PARTIR DE NS2328; 5270/105 NS1048
22	CM+9520051141	*	ZUGANKER - 5270/100 BIS FN2327; 5270/105 FN1047 TIE ROD - 5270/100 UP TO SN2327; 5270/105 SN1047 TIRANT D'ANCRAGE - 5270/100 JUSQU'AU NS2327; 5270/105 NS1047
23	CM+9527011041		KLEBESCHILD ADHESIVE LABEL ETIQUETTE ADHÉSIVE
24	CM+9520056022		HALTER LINKS HOLDER LHS FIXATION A GAUCHE
25	CM+9520056032		LEITBLECH UNTEN GUIDE PLATE BOTTOM TOLE DE GUIDAGE EN BAS
26	CM+9520056012		HALTER RECHTS HOLDER RHS FIXATION À DROITE
99	CM+9527085002		VERTEILEREINHEIT DISTRIBUTOR UNIT UNITE DE DISTRIBUTION

☐=Assembly
D =Standard part. For order please refer to the separate spare parts list for standard parts "DD+DIS011.93M"
* =No wearing part.

DISTRIBUTOR UNIT (2/2)

DOCUMENT CONTROL NOTE:
The controlled version of this document resides on MedNet. Any printed copy of this document is uncontrolled.

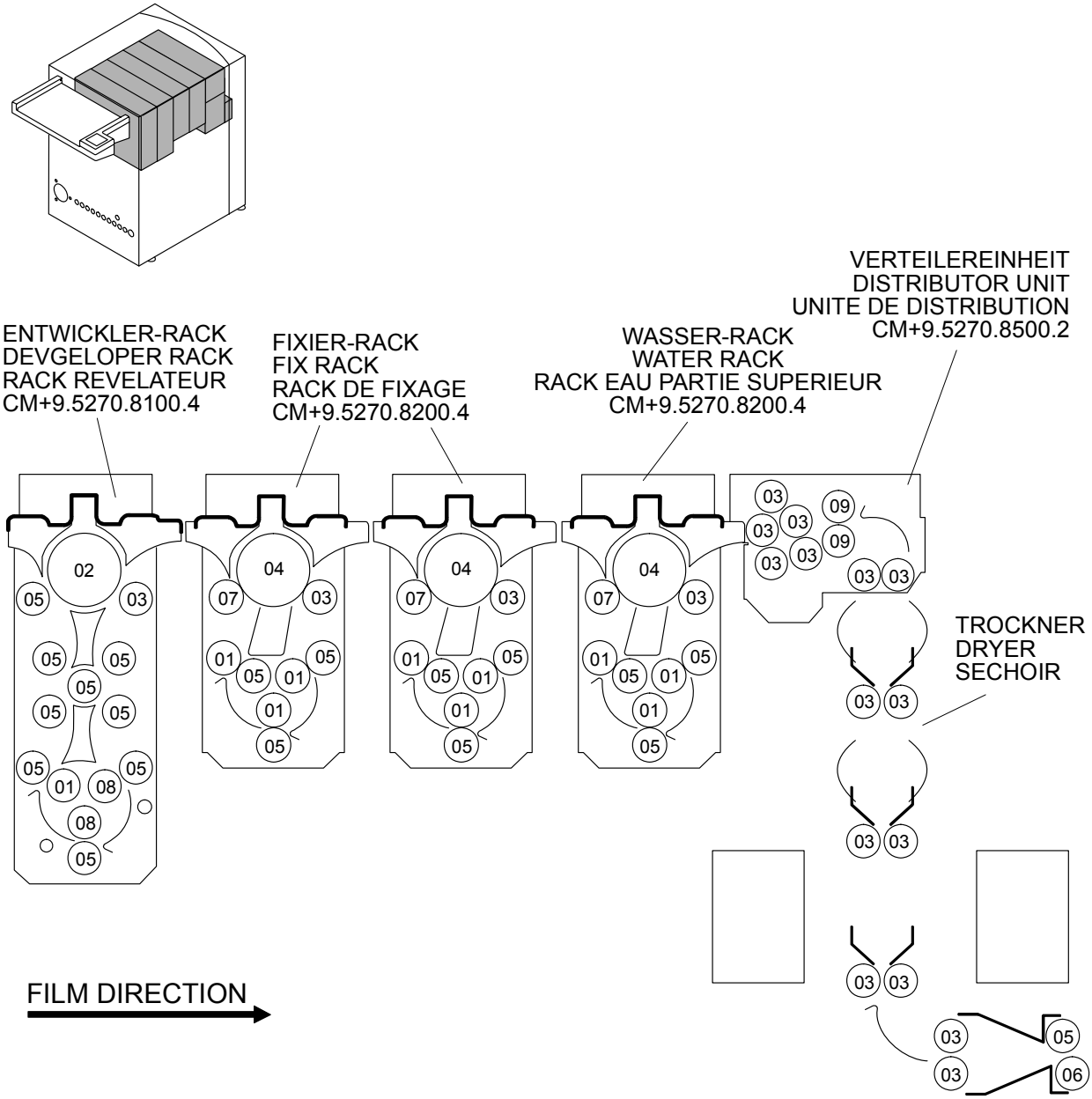

5270_0100_0105_8028.CDR

ROLLER POSITIONING PLAN

DOCUMENT CONTROL NOTE:
The controlled version of this document resides on MedNet. Any printed copy of this document is uncontrolled.

Pos. Nr. Item no. Pos. no.	Teile-Nr. Part No. Nr. de Ref.	Benennung Description Denomination
1	CM+9520051501	WALZE (GUMMI 22,5) GRAU ROLLER (RUBBER 22,5) GREY ROULEAU (CAOUTCHOU 22,5) GRIS
2	CM+9520051602	WALZE (GUMMI 48) GRAU ROLLER (RUBBER 48) GREY ROULEAU (CAOUTCHOUC 48) GRIS
3	CM+9522061501	WALZE (GUMMI 22,5) GRAU ROLLER (RUBBER 22,5) GREY ROULEAU (CAOUTCHOUC 22,5) GRIS
4	CM+9520054202	WALZE (PUR 48) GELB ROLLER (PUR 48) YELLOW ROULEAU (PUR 48) JAUNE
5	CM+9520054304	WALZE (PUR 22,5) GELB ROLLER (PUR 22,5) YELLOW ROULEAU (PUR 22,5) JAUNE
6	CM+9521060682	WALZE (GUMMI 22,6) MIT EINSTICH ROT ROLLER (RUBBER 22,6) WITH RECESS RED ROULEAU (CAOUTCHOUC 22,6) AVEC MÈPLAT ROUGE
7	CM+9520054403	WALZE (PUR 22,5) GELB (PUR-GESCHLIFFEN) ROLLER (PUR 22,5) YELLOW (PUR ROUGH) ROULEAU (PUR 22,5) JAUNE (PUR POLIE)
8	CM+9521083601	WALZE (GUMMI 22,8) GRAU ROLLER (RUBBER 22,8) GREY ROULEAU (CAOUTCHOUC 22,8) GRIS
9	CM+9527085700	WALZE (GTK- 722A - D22,5) GRAU ROLLER (GTK- 722A - D22,5) GREY ROULEAU (GTK- 722A - D22,5) GRIS

□=Assembly
D =Standard part. For order please refer to the separate spare parts list for standard parts "DD+DIS011.93M"
* =No wearing part.

ROLLER POSITIONING PLAN

DOCUMENT CONTROL NOTE:
The controlled version of this document resides on MedNet. Any printed copy of this document is uncontrolled.

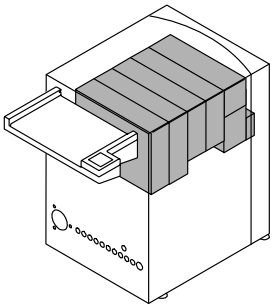

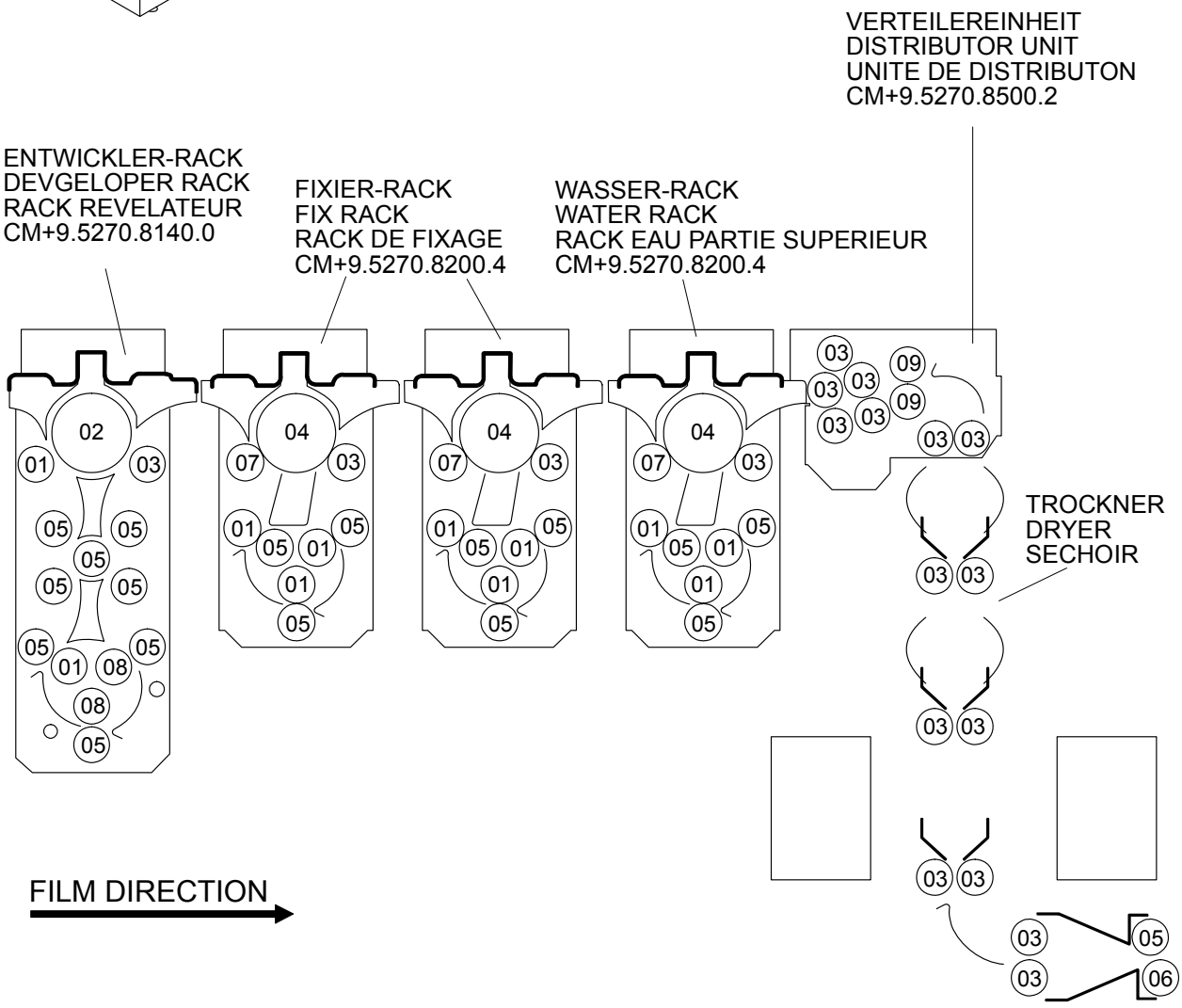

5270_0100_0105_8029.CDR

ROLLER POSITIONING PLAN

DOCUMENT CONTROL NOTE:
The controlled version of this document resides on MedNet. Any printed copy of this document is uncontrolled.

Pos. Nr. Item no. Pos. no.	Teile-Nr. Part No. Nr. de Ref.	Benennung Description Denomination
1	CM+9520051501	WALZE (GUMMI 22,5) GRAU ROLLER (RUBBER 22,5) GREY ROULEAU (CAOUTCHOU 22,5) GRIS
2	CM+9520051602	WALZE (GUMMI 48) GRAU ROLLER (RUBBER 48) GREY ROULEAU (CAOUTCHOUC 48) GRIS
3	CM+9522061501	WALZE (GUMMI 22,5) GRAU ROLLER (RUBBER 22,5) GREY ROULEAU (CAOUTCHOUC 22,5) GRIS
4	CM+9520054202	WALZE (PUR 48) GELB ROLLER (PUR 48) YELLOW ROULEAU (PUR 48) JAUNE
5	CM+9520054304	WALZE (PUR 22,5) GELB (PUR 22,5) ROLLER (PUR 22,5) YELLOW (PUR 22,5) ROULEAU (PUR 22,5) JAUNE (PUR 22,5)
6	CM+9521060682	WALZE (GUMMI 22,6) MIT EINSTICH ROT ROLLER (RUBBER 22,6) WITH RECESS RED ROULEAU (CAOUTCHOUC 22,6) AVEC MÈPLAT ROUGE
7	CM+9520054403	WALZE (PUR 22,5) GELB ROLLER (PUR 22,5) YELLOW ROULEAU (PUR 22,5) JAUNE
8	CM+9521083601	WALZE (GUMMI 22,8) GRAU (GUMMI 22,8) ROLLER (RUBBER 22,8) GREY (RUBBER 22,8) ROULEAU (CAOUTCHOUC 22,8) GRIS (CAOUTCHOUC 22,8)
9	CM+9527085700	WALZE (GTK- 722A - D22,5) GRAU (GTK-SCHAUMWALZE 22,5) ROLLER (GTK- 722A - D22,5) GREY (GTK-FOAM PLASTIC 22,5) ROULEAU (GTK- 722A - D22,5) GRIS (GTK ALVEOLAIRE 22,5)

☐=Assembly
D =Standard part. For order please refer to the separate spare parts list for standard parts "DD+DIS011.93M"
* =No wearing part.

ROLLER POSITIONING PLAN

DOCUMENT CONTROL NOTE:
The controlled version of this document resides on MedNet. Any printed copy of this document is uncontrolled.

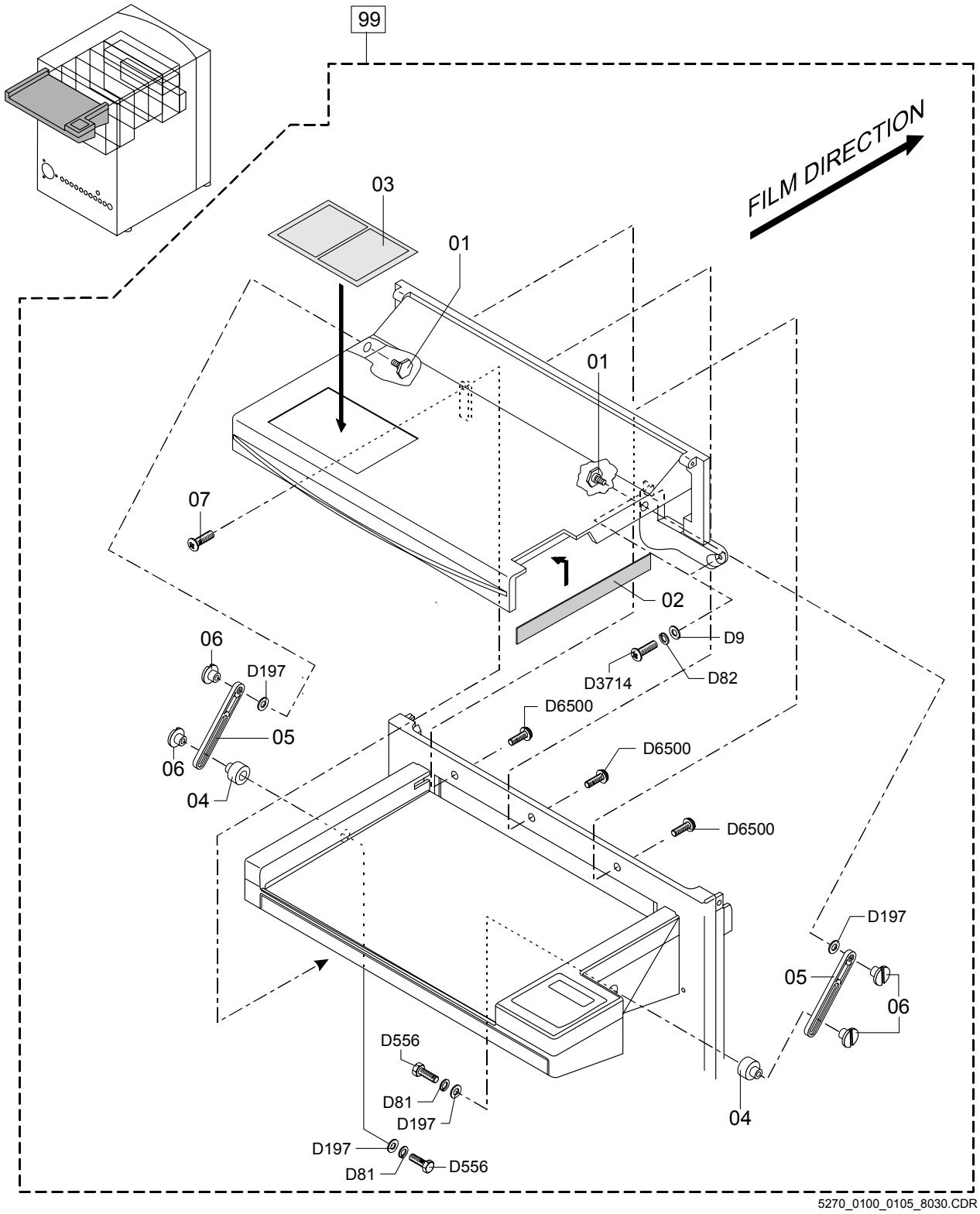

LIGHT TIGHT COVER ACCESSORIE

DOCUMENT CONTROL NOTE:
The controlled version of this document resides on MedNet. Any printed copy of this document is uncontrolled.

Pos. Nr. Item no. Pos. no.	Teile-Nr. Part No. Nr. de Ref.	Benennung Description Denomination
1	CM+9527030930	BOLZEN BOLT BOULON
2	CM+9527030850	FILZSTREIFEN FELT STRIP BANDE DE FEUTRE
3	CM+9527030890	AUFKLEBER ADHESIVE LABEL ETIQUETTE ADHESIVE
4	CM+9527030910	DISTANZBUCHSE SPACER BUSH ECARTEUR
5	CM+9527030941	HEBEL-PAAR LEVER-PAIR LEVIER-PAIRE
6	CM+9818520140	BOLZEN BOLT BOULON
7	CM+9527030960	EJOT-SCHRAUBE EJOT-SCREW EJOT-VIS
99	CM+9527030701	LICHTSCHUTZDECKEL LIGHT COVER PAROI ÉTANCHE À LA LUMIÈRE

☐=Assembly
D =Standard part. For order please refer to the separate spare parts list for standard parts "DD+DIS011.93M"
* =No wearing part.

LIGHT TIGHT COVER ACCESSORIE

DOCUMENT CONTROL NOTE:
The controlled version of this document resides on MedNet. Any printed copy of this document is uncontrolled.

Spare Parts Kit Categories

R 'Repair' **Parts required to repair a machine**

Kit `R` should be part of the field service engineers` car stock.
Quantity covers requirements for ca. 10 machines.

Adapt quantity locally depending on:

- number of machines
- extension of the service area
- local service structure (centralized / decentralized)
- stockpiling

I **'Installation'** **Parts required to install a machine**

Kit `I`should be available as case stock.
Includes all parts to perform the installation (does not comprise parts included in the shipment).
Quantity covers one single machine installation.

M 'Maintenance' **Parts required to maintain a machine**

Kit `M` should be available as case stock.
Includes all parts required to perform a maintenance according to the maintenance checklist.
Quantity covers one single maintenance.

L 'Local stock' **Extremely expensive or bulky parts**

Kit `L` should be part of the local central warehouse.
Determine quantity depending on costs and on the installed base.

Spare Parts Kit Order numbers

Order number	Spare Part Kit	version
CM+052700100731	CLASSIC E.O.S. Sortiment R	5
CM+052700100732	CLASSIC E.O.S. Sortiment I	4
CM+052700100733	CLASSIC E.O.S. Sortiment M	2
CM+052700100734	CLASSIC E.O.S. Sortiment L	2

DOCUMENT CONTROL NOTE:
The controlled version of this document resides on MedNet. Any printed copy of this document is uncontrolled.

Type Overview

This spare parts list is valid for the following machine type(s):

Device Name	Type No.	Specification
CLASSIC E.O.S.	5270/0100	230 V (200-240 V) 50/60
CLASSIC E.O.S. CL	5270/0105	230 V (200-240 V) 50/60

Accessory Overview

Following accesssories are separately available:

Accessory	Order number
REPLENISHER TANKS (2X30 L) WITH LEVEL SENS./CBL 5M	FI1XL
REPLENISHER TANKS (2X80 L) WITH LEVEL SENS./CBL 6M	F98XW
MIXER COMMUNICATION CABLE, 20 M	CM+9528030301
MIXER	FT7BV
LIGHT TIGHT COVER CLASSIC	EHA2H

DOCUMENT CONTROL NOTE:
The controlled version of this document resides on MedNet. Any printed copy of this document is uncontrolled.

Document No: DD+DIS022.05M

Copyright © 2007 Agfa HealthCare N.V.
All rights reserved.
Technical Modifications reserved.

Published by
Agfa HealthCare N.V.
Tegernseer Landstraße 161
D - 81539 München
Germany

www.agfa.com

AGFA and the Agfa-Rhombus are trademarks of Agfa HealthCare N.V.

DOCUMENT CONTROL NOTE:
The controlled version of this document resides on MedNet. Any printed copy of this document is uncontrolled.

Agfa Company Confidential

HEALTHCARE
Global Services Organisation

Ersatzteilliste
Spare Parts List
Liste des Pièces de Rechange

Order No.: DD+DIS060.03M

Thoramat Docking Kit

Type 5270/0200

Edition 5, Revision 3

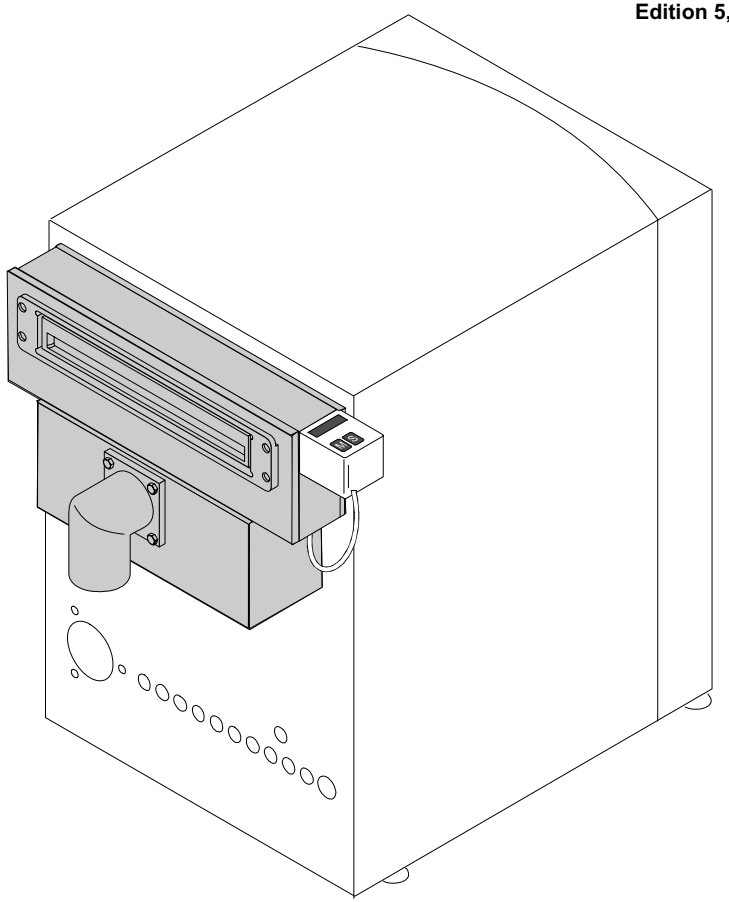

Die Ersatzteilliste ist gesondert lieferbar: Bestellnummer DD+DIS060.03M
The spare parts list is available separately. Order number DD+DIS060.03M
La liste des pièces détachées est à votre disposition séparément: No. de Ref. DD+DIS060.03M

internal update #: 2

CONFIDENTIALITY NOTE:
Use, dissemination, distribution or reproduction of this document by unauthorized personnel is not permitted and may be unlawful.
DOCUMENT CONTROL NOTE:
The controlled version of this document resides on MedNet. Any printed copy of this document is uncontrolled.

printed in Germany 12-2006

Agfa Company Confidential

Document Node ID: 13959235

Copyright © 2006 Agfa-Gevaert HealthCare

AGFA

WARNING:

Improper operation or service activities may cause damage or injuries.

INSTRUCTION:

1. Read the "Generic Safety Directions" document (see MEDNET GSO => General Info => Agfa HealthCare => Publications => Service Manual) prior to attempting any operation, repair or maintenance task on the equipment.
2. Strictly observe all safety directions within the "Generic Safety Directions" and on the product.

Revision History:

2006/12	Revision 3	Author: AL	Approver: GK
The changes to the previous version Edition 5, Revision 2 are:			
• Spare Parts List completely revised			

DOCUMENT CONTROL NOTE:
The controlled version of this document resides on MedNet. Any printed copy of this document is uncontrolled.

Inhaltsverzeichnis - Contents - Table de matières

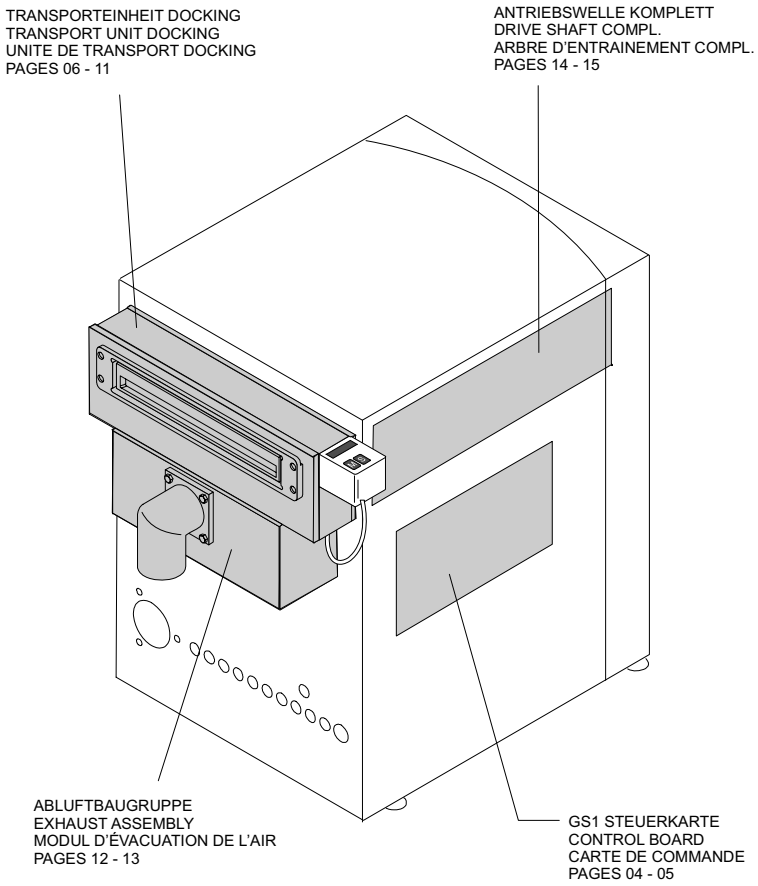

External Partners: For ordering spare parts contact your local AGFA representative.

Please refer to:
www.agfa.com => HealthCare => ABOUT US => Agfa HealthCare worldwide

For Recycling information refer to:

http://intra.agfanet/cd/ep/ehs.nsf

WARNING:
Hazards may be introduced because of component failure or improper operation.

Replace defective parts with Agfa® HealthCare original spare parts. Use only tools and measuring instruments which are suitable for the respective procedure.

DOCUMENT CONTROL NOTE:
The controlled version of this document resides on MedNet. Any printed copy of this document is uncontrolled.

DOCUMENT CONTROL NOTE:
The controlled version of this document resides on MedNet. Any printed copy of this document is uncontrolled.

Ersatzteilliste / Spare Parts List / Liste des Pièces de Rechange

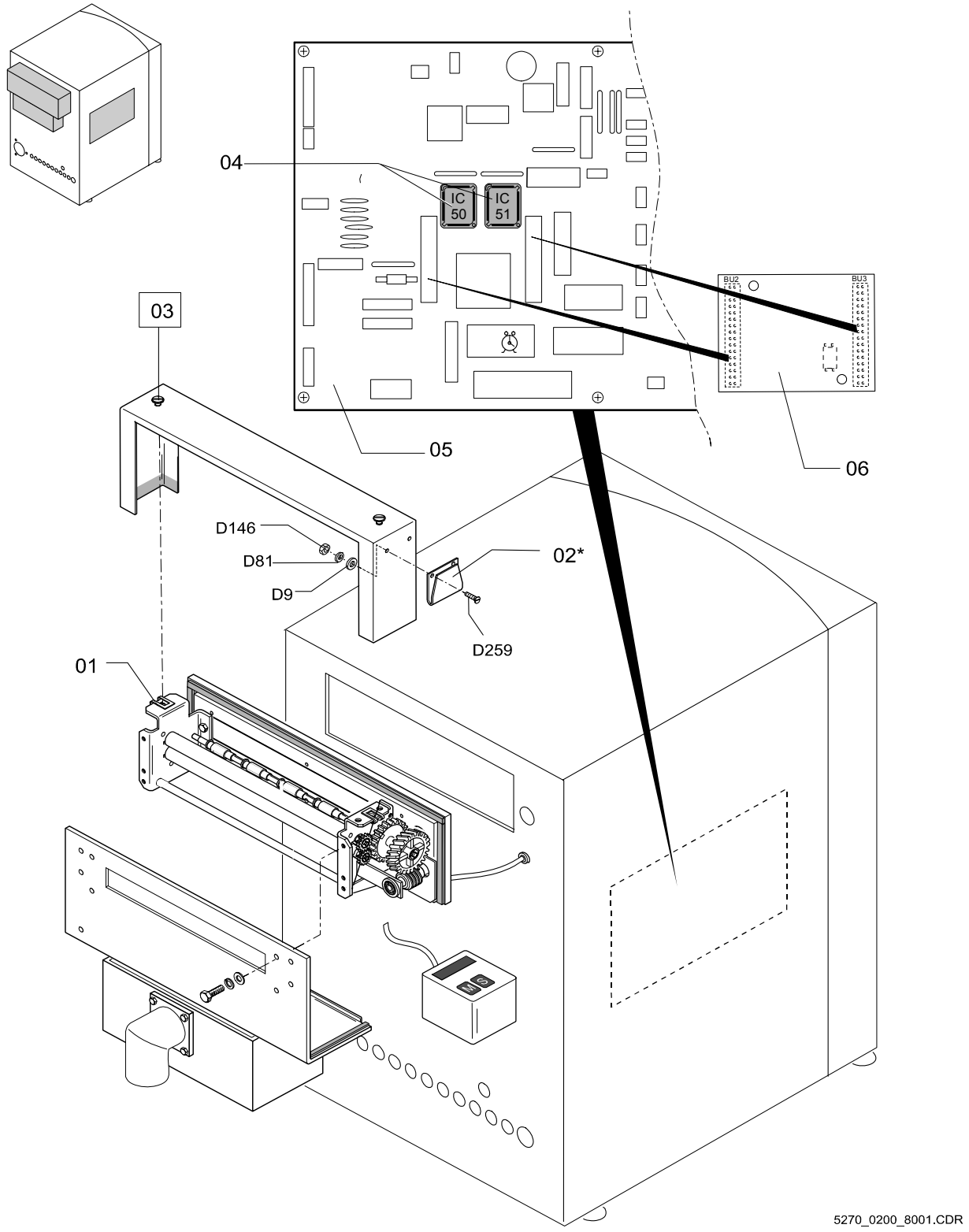

DOCUMENT CONTROL NOTE:
The controlled version of this document resides on MedNet. Any printed copy of this document is uncontrolled.

ABLUFT-UND TRANSPORTBAUGRUPPE
EXHAUST-AND TRANSPORT ASSEMBLY
MODULE D'EXTRATION DE L'AIR ET CELUI DE TRANSPORT

Pos. Nr. Item no. Pos. no.	Teile-Nr. Part No. Nr. de Ref.		Benennung Description Denomination
1	CM+9033175760		AUFSTECKHALTERUNG SLIP-ON MOUNT FIXATION EMBOITABLE
2	CM+9521637330	*	KLEMMTEIL CLAMP AGRAVE
3	CM+9527091501		VERSCHLUßZAPFEN KOMPLETT STUD COMPLETE PIVOT DE VERROUILLAGE COMPLETTE
4	CM+9527093504		EPROM-SATZ IC50 / IC51 EOSUNIV 1102 - (BIS FN1101) EPROM-SATZ IC50 / IC51 EOSUNIV 1102 - (UP TO SN1101) EPROM-SATZ IC50 / IC51 EOSUNIV 1102 - (JUSQU'AU NS1101)
4	CM+9527094103		EPROM-SATZ IC50/51 CLLC1301 - (AB FN1138) EPROM SET IC50/51 CLLC1301 - (FROM SN1138) EPROM VANNES IC50/51 CLLC1301 - (A PARTIR DE NS1138)
5	CM+9527079601		STEUERKARTE COMPACT - (GS1) CONTROL BOARD COMPACT BOITE ELECTRONIQUE COMPACT
6	CM+9527078800		FILM-AUSGANGSSENSOR - (GS3) FILM DETECTION DETECTION FILM

☐=Assembly

D =Standardised part. For order please refer to the separate spare parts list for standardised parts "DD+DIS011.93M"

* =Spare part not available from stock. Expect extended delivery time.

DOCUMENT CONTROL NOTE:
The controlled version of this document resides on MedNet. Any printed copy of this document is uncontrolled.

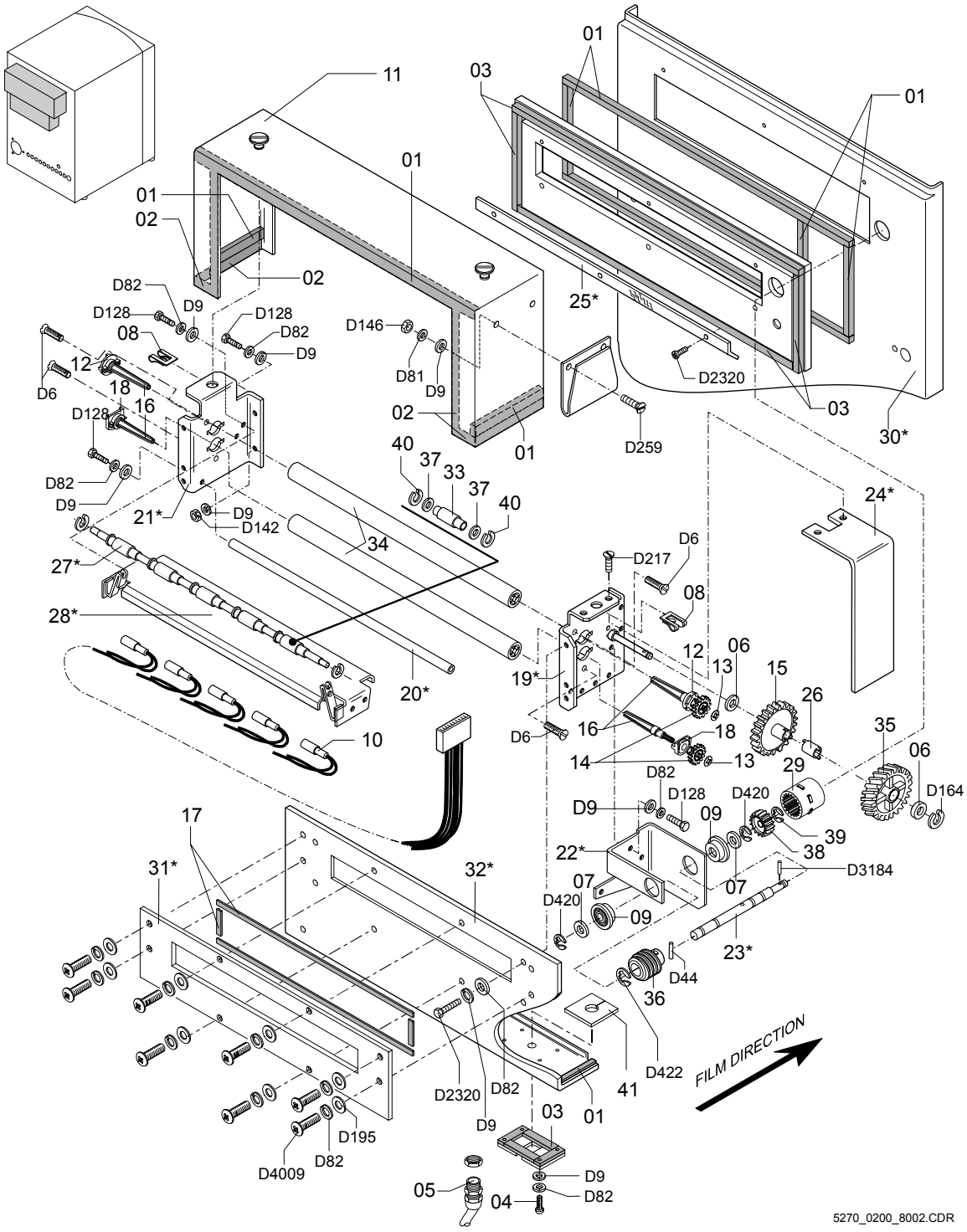

DOCUMENT CONTROL NOTE:
The controlled version of this document resides on MedNet. Any printed copy of this document is uncontrolled.

TRANSPORTEINHEIT DOCKING
TRANSPORT UNIT DOCKING
UNITÈ DE TRANSPORT DOCKING

Agfa Company Confidential

Pos. Nr. Item no. Pos. no.	Teile-Nr. Part No. Nr. de Ref.	Benennung Description Denomination
1	CM+0000014259	KLEBEBAND 12X12 ADHESIVE TAPE BANDE ADHESIVE
2	CM+0000001927	PLÜSCHBAND SELBSTKL. B=11MM VELVET BAND ADHESIVE BANDE EN VELOURS
3	CM+9527310250	KLEBEBAND 12X5 645MM ADHESIVE TAPE BANDE ADHESIVE
4	CM+9023003300	ISO 7045 - M4X12 A4 - Z ISO 7045 - M4X12 A4 - Z ISO 7045 - M4X12 A4 - Z
5	CM+9047910460	KABELVERSCHRAUBUNG PG9 CABLE PROTECTOR COLLIER DE SERRAGE
6	CM+9032738100	SCHEIBE-8x14x0,2-CuZn37 F37 WASHER RONDELLE
7	CM+9032757300	SCHEIBE - 10,2x15x0,25-CuSn6 WASHER RONDELLE
8	CM+9033175760	AUFSTECKHALTERUNG SLIP-ON MOUNT FIXATION EMBOITABLE
9	CM+9037101640	KUGELLAGER SF 6800-2Z BALL BEARING ROULEMENT A BILLES
10	CM+9520071500	KABELBAUM REEDKONTAKT CABLE HARNESS REED CONTACT FAISCEAU DE CABLE CONTACT REED
11	CM+9521637310	ABDECKUNG COVER COUVERCLE
12	CM+9520051190	LAGER BEARING PALIER
13	CM+9520051130	SCHEIBE WASHER RONDELLE
14	CM+9520051321	ZAHNRAD Z=15 / SCHWARZ GEAR WHEEL T=15 / BLACK ROUE DENTEE D=15 / NOIR
15	CM+9520051350	ZAHNRAD M=1,5 / Z=32 / SCHWARZ GEAR M=1,5 / T=32 / BLACK ROUE DENTEE M=1,5 / D=32 / NOIR
16	CM+9520051412	BOLZEN BOLT BOULON
17	CM+0000014261	DICHTUNGSBAND 12X3 ADHESIVE TAPE BANDE ADHESIVE
18	CM+9522056700	LAGER 2-FACH ANGEFEDERT BEARING DOUBLE SPRING LOADED PALIER A DOUBLE SUSPENSION

☐=Assembly

D =Standardised part. For order please refer to the separate spare parts list for standardised parts "DD+DIS011.93M"

* =Spare part not available from stock. Expect extended delivery time.

DOCUMENT CONTROL NOTE:
The controlled version of this document resides on MedNet. Any printed copy of this document is uncontrolled.

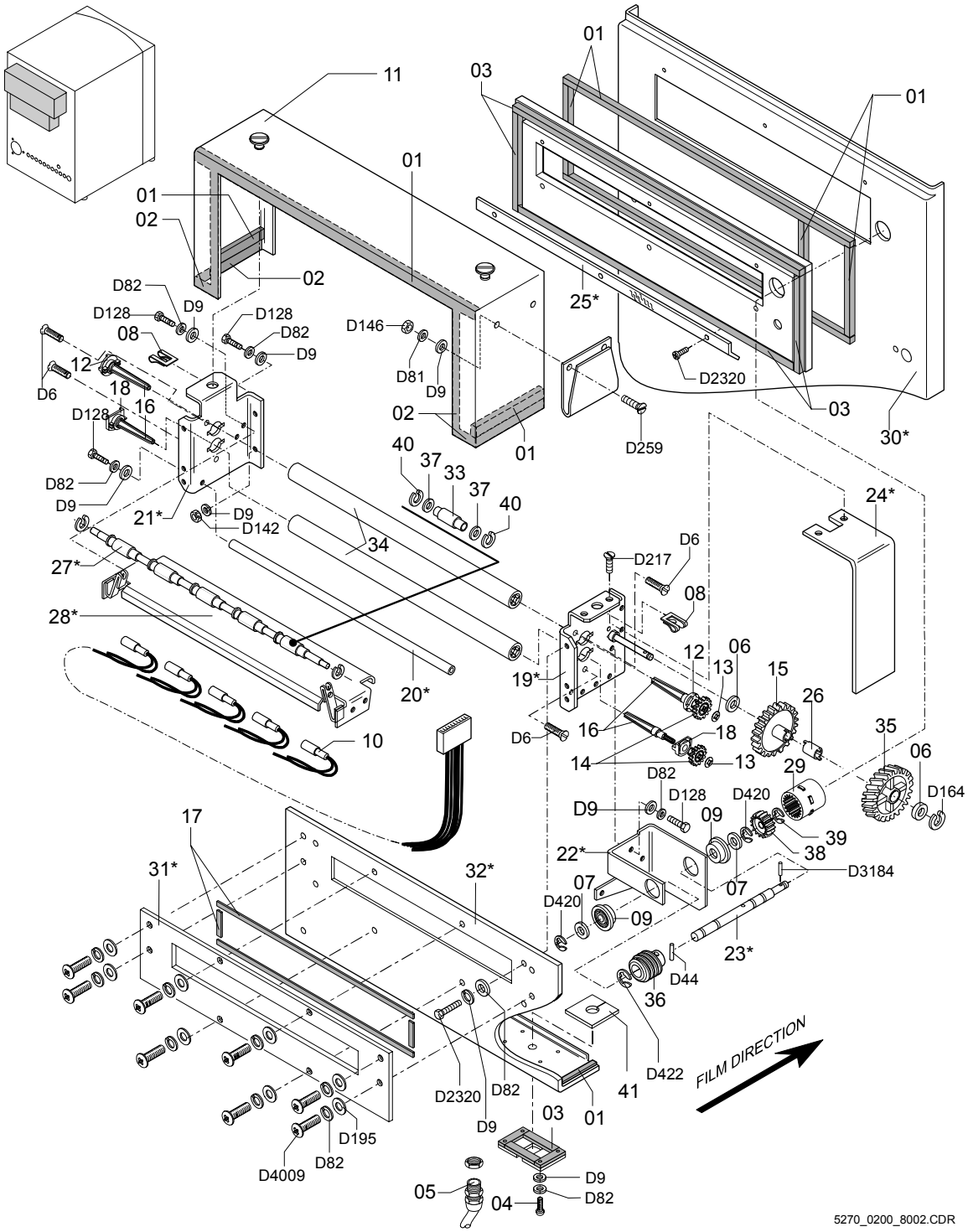

DOCUMENT CONTROL NOTE:
The controlled version of this document resides on MedNet. Any printed copy of this document is uncontrolled.

TRANSPORTEINHEIT DOCKING
TRANSPORT UNIT DOCKING
UNITÈ DE TRANSPORT DOCKING

Agfa Company Confidential

Pos. Nr. Item no. Pos. no.	Teile-Nr. Part No. Nr. de Ref.		Benennung Description Denomination
19	CM+9527320300	*	PLATINE RECHTS GENIETET PLATE RHS RIVETED PLAQUE A DROITE
20	CM+9521620170	*	ZUGANKER TIE ROD TIRANT
21	CM+9527320400	*	PLATINE LINKS GENIETET PLATE LHS RIVETET PLAQUE A GAUCHE
22	CM+9527320710	*	GETRIEBEWINKEL TRANSMISSION BRACKET EQUERRE D'ENGRENAGES
23	CM+9527320751	*	SCHNECKENWELLE WORM GEAR SHAFT VIS SANS FIN
24	CM+9521620290	*	SCHUTZWINKEL COVER PLATE EQUERRE DE PROTECTION
25	CM+9527320600	*	LEITBLECH GUIDE PLATE TOLE DE GUIDAGE
26	CM+9521620410		DISTANZBUCHSE SPACER BUSH ECARTEUR
27	CM+9521620572	*	STANGE ROD BARRE
28	CM+9527320500	*	TISCHPLATTE, GESCHWEISST TABLE PLATE WELDED PLAQUE DE TABLE
29	CM+9946021082		KUPPLUNGSROHR PIPE UNION RACCORD
30	CM+9527031111	*	VORDERWAND, LACKIERT FRONT WALL, VARNISHED PAROI FRONTALE, VERNI
31	CM+9527021100	*	PLATTE PLATE PLAQUE
32	CM+9527021020	*	VERKLEIDUNGSTEIL - NACHARBEIT PANELING PART PANNEAU
33	CM+9522016801		ABTASTROLLE DETECTOR ROLLER GALET DE DÉTECTION
34	CM+9522061501		WALZE (GUMMI 22,5) GRAU ROLLER (RUBBER 22,5) GREY ROULEAU (CAOUTCHOUC 22,5) GRIS
35	CM+9818460810		SCHRÄGSTIRNRAD HELICAL SPUR GEAR ROUE HELICOIDALE
36	CM+9818511420		SCHNECKE WORM GEAR VIS SANS FIN

☐=Assembly

D =Standardised part. For order please refer to the separate spare parts list for standardised parts "DD+DIS011.93M"

* =Spare part not available from stock. Expect extended delivery time.

DOCUMENT CONTROL NOTE:
The controlled version of this document resides on MedNet. Any printed copy of this document is uncontrolled.

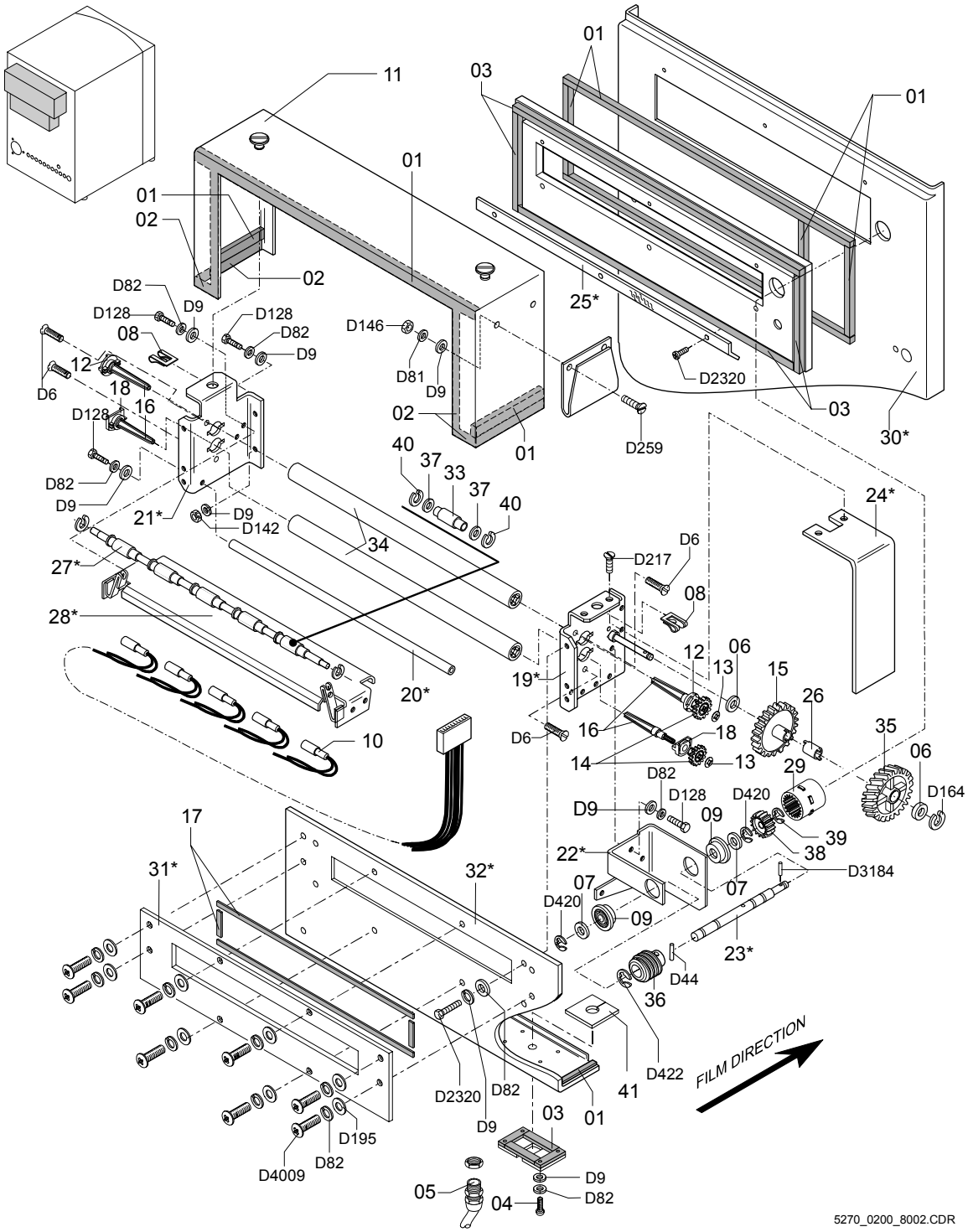

DOCUMENT CONTROL NOTE:
The controlled version of this document resides on MedNet. Any printed copy of this document is uncontrolled.

TRANSPORTEINHEIT DOCKING
TRANSPORT UNIT DOCKING
UNITÈ DE TRANSPORT DOCKING

Pos. Nr. Item no. Pos. no.	Teile-Nr. Part No. Nr. de Ref.	Benennung Description Denomination
37	CM+9818565720	SCHEIBE WASHER RONDELLE
38	CM+9940211011	GERADSTIRNRAD M=1,5 / Z=15 SPUR GEAR M=1,5 / T=15 ROUE DENTEE M=1,5 / D=15
39	CM+9940211290	SICHERUNGSSCHEIBE RETAINER RING RONDELLE D'ARRET
40	CM+9943230250	SICHERUNGSSCHEIBE RETAINER RING RONDELLE D'ARRET
41	CM+9527337720	DICHTUNGSPLATTE SEALING PLATE PLAQUE D'ETANCHEITE

☐=Assembly

D =Standardised part. For order please refer to the separate spare parts list for standardised parts "DD+DIS011.93M"

* =Spare part not available from stock. Expect extended delivery time.

DOCUMENT CONTROL NOTE:
The controlled version of this document resides on MedNet. Any printed copy of this document is uncontrolled.

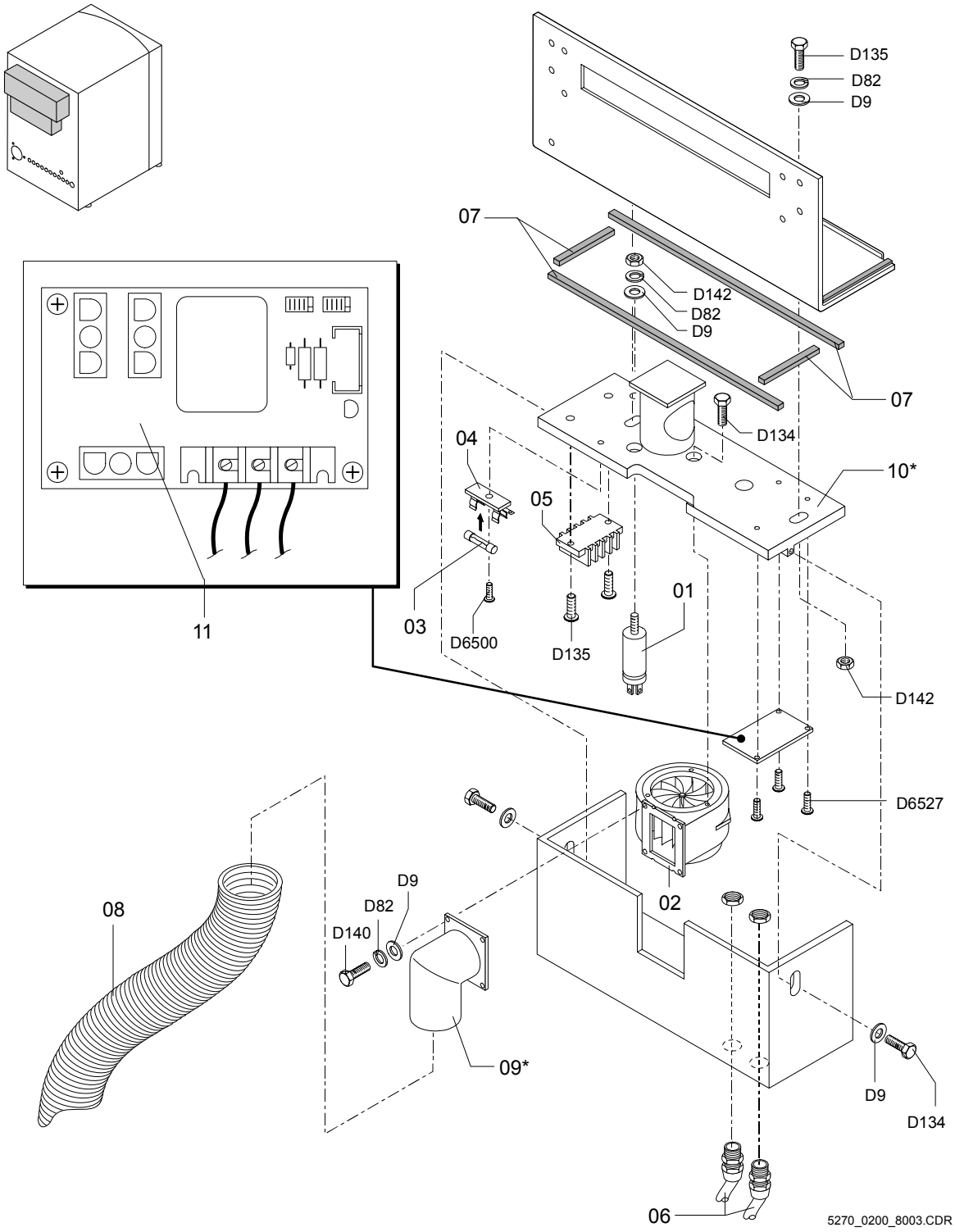

DOCUMENT CONTROL NOTE:
The controlled version of this document resides on MedNet. Any printed copy of this document is uncontrolled.

ABLUFT-BAUGRUPPE
EXHAUST ASSEMBLY
MODULE D'EXTRACTION DE L'AIR

Agfa Company Confidential

Pos. Nr. Item no. Pos. no.	Teile-Nr. Part No. Nr. de Ref.		Benennung Description Denomination
1	CM+9041506300		KONDENSATOR 1U/400V 25X48-AF CAPACITOR CONDENSATEUR
2	CM+9043100640		LÜFTER 230V/60HZ 24L/S UL FAN VENTILATEUR
3	CM+9045196050		SICHERUNG T 250MA FUSE T 250MA FUSIBLE T 250MA
4	CM+9045222420		SICHERUNGSHALTER FUSE HOLDER PORTE FUSIBLE
5	CM+9047202700		FLACHSTECKERLEISTE FLAT CONNECTOR TERMINAL STRIP BARRETTE PLATE DE RACCORDEMENT
6	CM+9047910470		KABELVERSCHRAUBUNG PG11 CABLE CLAMP COLLIER DE SERRAGE
7	CM+0000014261		DICHTUNGSBAND 12X3 ADHESIVE TAPE BANDE ADHESIVE
8	CM+9527021060		PAPPSCHLAUCH NW50 L= 700MM CARDBOARD PIPE TUBE EN CARTON
9	CM+9527021200	*	ABSAUGKRÜMMER EXTRACTION ELBOW COUDE D'ASPIRATION
10	CM+9527021300	*	LÜFTERPLATTE FAN PLATE PLAQUE DE VENTILATEUR
11	CM+9527021700		GS RELAISEKARTE RELAISECARD RELAISECARD

☐=Assembly

D =Standardised part. For order please refer to the separate spare parts list for standardised parts "DD+DIS011.93M"

* =Spare part not available from stock. Expect extended delivery time.

DOCUMENT CONTROL NOTE:
The controlled version of this document resides on MedNet. Any printed copy of this document is uncontrolled.

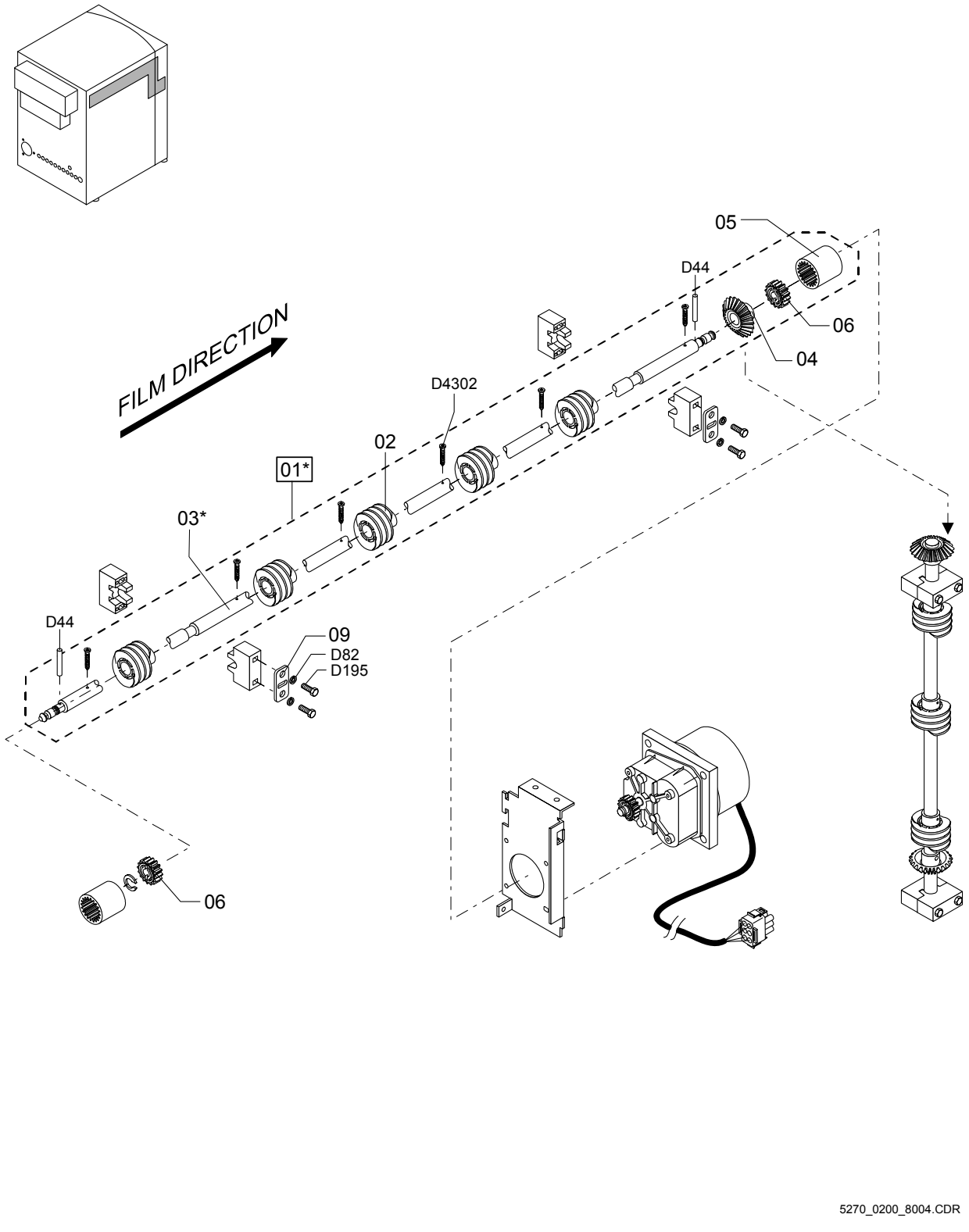

DOCUMENT CONTROL NOTE:
The controlled version of this document resides on MedNet. Any printed copy of this document is uncontrolled.

ANTRIEBSWELLE
DRIVE SHAFT
ARBRE DE COMMANDE

Pos. Nr. Item no. Pos. no.	Teile-Nr. Part No. Nr. de Ref.		Benennung Description Denomination
1	CM+9527021600		ANTRIEBSWELLE VOLLSTÄNDIG DRIVE SHAFT COMPLETE. ARBRE D'ENTRAINEMENT COMPLET
2	CM+9520061062		SCHNECKE M=2 / Z=2 / RECHTS WORM GEAR M=2 / TEETH=2 / RHS VIS SANS FIN M=2 / DENTS=2 / A DROIT
3	CM+9527011523	*	ANTRIEBSWELLE DRIVE SHAFT ARBRE D'ENTRAINEMENT
4	CM+9522012731		KEGELRAD BEVEL GEAR ROUE DENTEE
5	CM+9839534160		KUPPLUNGSROHR PIPE UNION RACCORD
6	CM+9940211011		GERADSTIRNRAD M=1,5 / Z=15 SPUR GEAR M=1,5 / T=15 ROUE DENTEE M=1,5 / D=15

☐=Assembly

D =Standardised part. For order please refer to the separate spare parts list for standardised parts "DD+DIS011.93M"

* =Spare part not available from stock. Expect extended delivery time.

DOCUMENT CONTROL NOTE:
The controlled version of this document resides on MedNet. Any printed copy of this document is uncontrolled.

Empfohlene Ersatzteilsortimente

Ersatzteilsortimente repräsentieren eine Auswahl wichtiger Teile aus der Ersatzteilliste.

Sortimentskategorien

R 'Repair' **Teilebedarf zur Reparatur des Geräts.**
Dieses Sortiment sollte der Techniker im Auto mitführen "Car Stock".
Die Mengen decken den Bedarf für bis zu 10 Geräte.
Lokal individuelle Mengenanpassungen vornehmen in Abhängigkeit von:
- Anzahl der Geräte
- Größe des Servicegebiets
- Servicestruktur (zentral/dezentral)
- Bevorratungszeit

I 'Installation' **Teilebedarf zur Installation des Geräts.**
Dieses Sortiment sollte als Kofferlager zur Verfügung stehen.
Es enthält alle gerätespezifischen Teile die zusätzlich zu den Teilen des Gerätelieferumfangs zur Durchführung einer Installation benötigt werden.
Die Mengen reichen für eine einzige Geräteinstallation.

M 'Maintenance' **Teilebedarf zur Wartung des Geräts.**
Dieses Sortiment sollte als Kofferlager zur Verfügung stehen.
Dieses Sortiment muss für eine Wartung zur Verfügung stehen.
Es enthält alle gerätespezifischen Teile die zur Durchführung einer Wartung nach Wartungscheckliste benötigt werden.
Die Mengen reichen für eine einzige Wartung.

L 'Local stock' Extrem teure oder sperrige Teile die im Zentrallager des Landes anstatt im R-Sortiment zur Verfügung stehen sollten.
Strategischer Bestand unabhängig von der Anzahl der Geräteinstallationen.
Falls diese Teile Bestandteil des Serviceabkommens sind müssen sie nach Verwendung umgehend wieder auf Lager gelegt werden.

DOCUMENT CONTROL NOTE:
The controlled version of this document resides on MedNet. Any printed copy of this document is uncontrolled.

Recommended Spare Parts Assortments

Spare Parts Assortments represent a selection of important parts out of the Spare Parts List.

Categories of Assortments

R 'Repair'

Parts required to repair a machine.
This assortment should be available in the field service engineers` car stock
Quantity covers requirements for up to 10 machines.
Adapt the locally required individual amount depending on:
- number of machines
- extension of the service area
- service structure (centralized/decentralized)
- stockpiling

I 'Installation'

Parts required to install a machine.
This assortment should be available in a suitcase.
It includes all machine specific parts required to perform the installation in addition to the parts included in the shipment.
Quantity covers one single machine installation

M 'Maintenance'

Parts required to maintain a machine.
This assortment should be available in a suitcase.
This assortment must be available during a maintenance job, it includes all machine specific parts required to perform a maintenance according to the Maintenance check list.
Quantity covers one single maintenance.

L 'Local stock'

Extremely expensive or bulky parts which should be kept in the country central warehouse instead of the R assortment.
Strategic stock quantity is independent of the installed base.
If service contract obligations refer to these parts, they must be replenished immediately.

DOCUMENT CONTROL NOTE:
The controlled version of this document resides on MedNet. Any printed copy of this document is uncontrolled.

Assortiments de pièces détachées

Les assortiments suivants représentent une sélection de pièces essentielles extraites de la liste de pièces détachées.

Catégories d'assortiments

R 'Repair' **Pièces requises pour la réparation de l'appareil.**
Le technicien devrait avoir cet assortiment dans son véhicule (= Carstock)
Cette quantité est suffisante pour la réparation de 10 appareils.
Adapter les quantités sur place d'après les critères :
- nombre d'appareils
- extension de la zone d'intervention
- structure du service technique (centralisation/décentralisation)
- temps d'approvisionnement

I 'Installation' **Pièces requises pour l'installation de l'appareil.**
Cet assortiment devrait être disponible dans une mallette.
Il contient toutes les pièces spécifiques à l'appareil requises pour effecteur l'installation en plus des pièces incluses dans la fourniture.
La quantité recouvre les besoins pour l'installation d'un seul appareil.

M 'Maintenance' **Pièces requises pour la révision de l'appareil.**
Cet assortiment devrait être disponible dans une mallette.
Cet assortiment doit être disponible pendant la révision.
Il contient toutes les pièces spécifiques à l'appareil pour effecteur la maintenance en fonction de la Maintenance check list.
Cette quantité est suffisante pour la révision d'un seul appareil.

L 'Local stock' Pièces encombrantes, extrêmement onéreuses qui devraient être stockées dans le magasin central de votre pays à la place de l'assortiment R.
La réserve de pièces stratégiques ne dépend pas du nombre d'appareils installés.
Si le contrat de maintenance fait référence à ces pièces elles doivent être remplacées immédiatement.

DOCUMENT CONTROL NOTE:
The controlled version of this document resides on MedNet. Any printed copy of this document is uncontrolled.

Bestellung von Sortimenten

Bestellung AGFA intern:
Code AH602A im EVS öffnen, Sortimentsnummer für das gewünschte Sortiment R, I, M oder L eingeben und Einzelteile bestellen.

Bestellung durch AGFA Partner:
Das gewünschte Sortiment bei der zuständigen AGFA Vertretung mit Angabe der betreffenden Sortimentsnummer R, I, M oder L bestellen.

Ordering of Spare Part Kits

AGFA internal orders:
Open Code AH602A in the EVS, enter the kit number for the required assortment R, I, M, or L and order individual parts.

Orders of AGFA partners:
Order the required assortment via the responsible AGFA Agency listing the respective kit number of assortment R, I, M, or L.

Commande d'assortiments

Commande interne à AGFA :
ouvrir le code AH602A dans EVS, écrire le numéro de l'assortiment souhaité comme R, I, M ou L et passer commande des pièces.

Commande par les partenaires d'AGFA :
passer commande de l'assortiment souhaité auprès du dépositaire AGFA en charge en indiquant le numéro de l'assortiment comme R, I, M ou L.

CM+052700200731	Thoramat Docking Kit Sortiment R	Version 2
CM+052700200734	Thoramat Docking Kit Sortiment L	Version 2

DOCUMENT CONTROL NOTE:
The controlled version of this document resides on MedNet. Any printed copy of this document is uncontrolled.

Typenverzeichnis / Type List / List de Type

CLASSIC E.O.S. CL	-	5270/0105
Thoramat Docking Kit	-	5270/0200

DOCUMENT CONTROL NOTE:
The controlled version of this document resides on MedNet. Any printed copy of this document is uncontrolled.

Optionen / Options / Options

- INTENTIONALLY LEFT BLANK -

Nur über Vertrieb bestellbar / Can only be ordered through Sales / Passer commande uniquement par le service des ventes

DOCUMENT CONTROL NOTE:
The controlled version of this document resides on MedNet. Any printed copy of this document is uncontrolled.

Copyright © 05.12.2006 DD+DIS060.03M Agfa-Gevaert HealthCare
Alle Rechte vorbehalten / All rights reserved / Tous droits réservés

Herausgegeben von / Published by / Edité par

Agfa-Gevaert HealthCare
Tegernseer Landstraße 161
D - 81539 München

Technische Änderungen vorbehalten
Technical modifications reserved
Sous réserve des modifications techniques

AGFA und der Agfa-Rhombus sind eingetragene Warenzeichen von Agfa-Gevaert HealthCare
AGFA and the Agfa-Rhombus are trade marks of Agfa-Gevaert HealthCare
AGFA et le logo Agfa sont des marques déposées de Agfa-Gevaert HealthCare

Agfa Company Confidential

Accessories

9

Section 9

describes the installation of accessories (assembly types).

Repair, maintenance and spare parts of accessories are implemented in the machine documentation or available as separate documentation.

Chapter 9

Contents

Revision	Order number	Contents
09.11.00	DD+DIS309.00E	Installation Instructions for the Light Tight Cover CM+9.5270.3070.1

Order number: DD+DIS309.00E

1 piece UDN28 MA 1
F7.5270.3071.1
(only for production purposes)

November 2000

Accessories for the machines

Classic E.O.S.

Type 5270/100/105

Mamoray Classic E.O.S.

Type 5272/100

Please file these modification instructions in section „Options“ of your *TECHNICAL DOCUMENTATION*. This document replaces the modification instructions DD+DIS136.00E.

Installation Instructions for the Light Tight Cover CM+9.5270.3070.1

This document is part of the *TECHNICAL DOCUMENTATION* and part of the spare part CM+9.5270.3070.1. It describes the installation of the light tight cover for the Classic E.O.S. (Type 5270/100/105) and Mamoray Classic E.O.S. (Type 5272/100).

Aim of the option:

With the light tight cover closed there is no need to wait for completion of the film feed.

approx ¾ h

no special tools necessary

printed in Germany

Contents

1 Scope of delivery 1

2 Required tools 1

3 Preparations 2

3.1 Pasting over of the crevices beneath the film feed 3

4 Using the drilling templates 4

5 Mounting the light tight cover 5

6 Additional sealing of the display housing 6

7 Mounting the guide bracket on the light tight cover 7

8 Completion of the modification 8

1 Scope of delivery

Quantity	Designation
1	Light tight cover
1	Twist drill ∅ 4.0
1	Twist drill ∅ 6.0
3	Screws M3x20 (Phillips screw)
2	Drilling template
2	light tight strip (black sticker)
2	Covering
2	Spacer bushing
2	Spring washer
2	Washer
2	Stud
1	Feed table sealing
2	Screw M3x20 (hexagon screw)
1	EJOT screw KB70x14

2 Required tools

Quantity	Designation
1	Screwdriver (Phillips), size 1
1	Screwdriver, (blade width 10x0.8)
1	Wrench, size 5.5
1	Pointed pliers
1	Drilling machine

3 Preparations

1. Disconnect the machine from the mains (unplug the mains connector).
2. Remove the machine cover.
3. Remove the developer rack and the two fixer racks.

If it is not possible to drain the chemical solutions, make sure to cover them. Covering the tanks with a film should prevent metal chips from falling into the chemical solutions during the drilling work.

1. Insert a film through the film feed.
2. Pull the film across the racks until the developer and fixer tanks are covered.
3. Remove the 3 screws at the inner wall at the side of the film feed table (see ③ in figure 1).

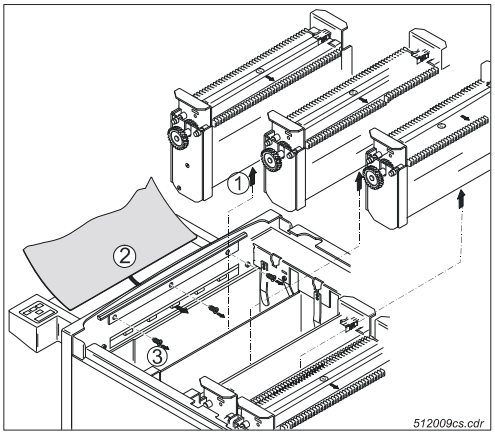

Figure 1: Machine inside (film feed side)

4. Drill through the existing holes at the machine inside (drill ∅ 4.0).
5. Remove the film and chips carefully.

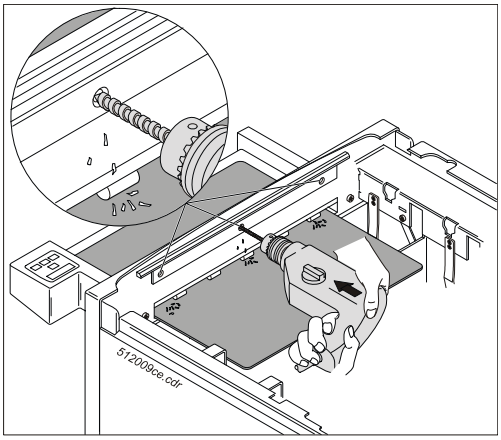

Figure 2: Drilling

4. Remove the cable cover by undoing the two screws ① below the film feed table.
5. Remove the display cover by undoing screw ②.

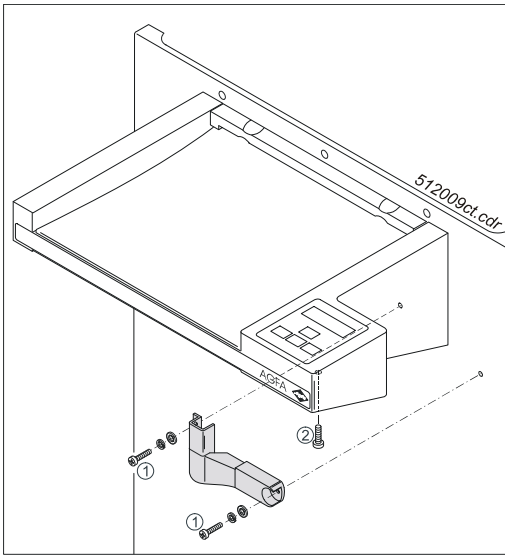

Figure 3: Bottom of the film feed table

3.1 Pasting over of the crevices beneath the film feed

1. Paste over the two crevices beneath the film feed with the enclosed light tight strips/black stickers (see figure 4).

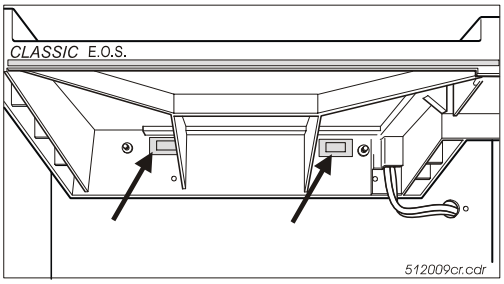

Figure 4: Light tight strips beneath the film feed

Light possibly penetrates the crevice, if the light tight strips are not pasted over.

4 Using the drilling templates

1. Attach the enclosed right drilling template (see figure 5).

   Observe the mounting instructions on the label.
2. Drill a hole through the side panel of the feed table at the position marked with ⊕ (drill ∅ 6.0).

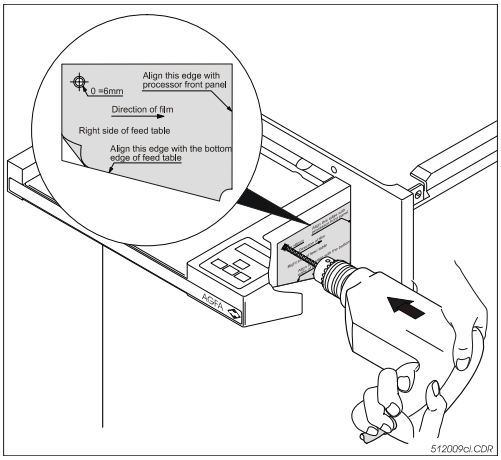

Figure 5: Right drilling template on the film feed table

3. Attach the enclosed left drilling template (see figure 6).

   Observe the mounting instructions on the label.
4. Drill a hole through the side panel of the feed table at the position marked with ⊕ (drill ∅ 6.0).

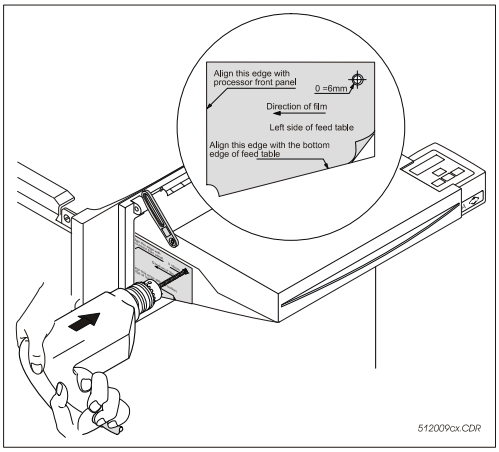

Figure 6: Left drilling template on the film feed table

5 Mounting the light tight cover

1. Tilt the light tight cover on the film feed table as shown in figure 7. Connect the light tight cover first above the display housing.

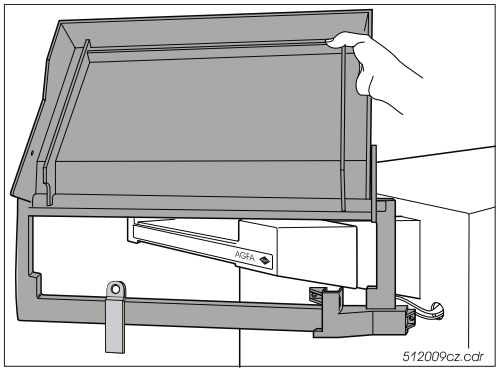

Figure 7: Positioning of the light tight cover

2. Mount the light tight cover by means of the three enclosed Phillips screws (1).
3. Mount the bottom of the light tight cover by means of the screws (2) removed before.

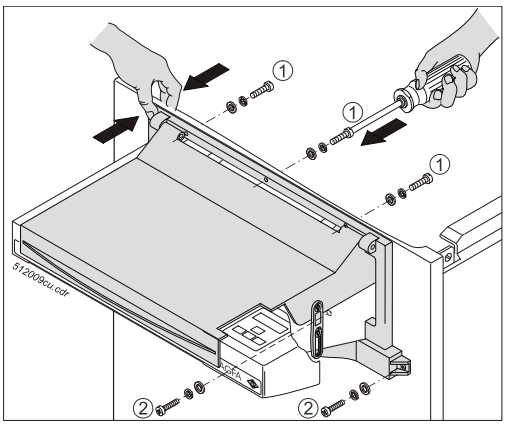

Figure 8: Upper screw connection

If there is a light tight wall at the film feed table, a second person will be necessary for mounting the light tight cover.

4. Mount the bottom of the light tight cover on the left hand side by means of the delivered EJOT screw.

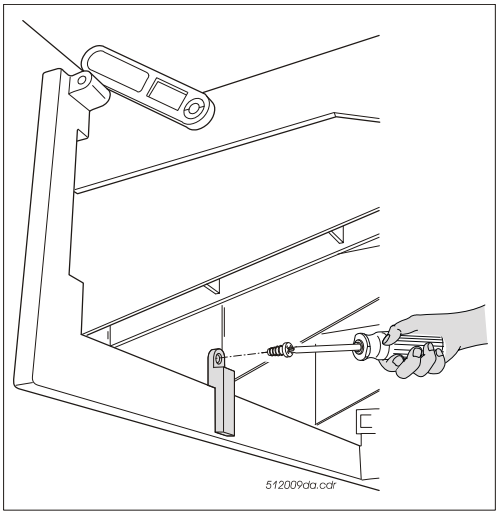

Figure 9: Left screw connection

6 Additional sealing of the display housing

1. Insert the enclosed seal from below into the provided recess of the display housing (see ① in figure 10). The rib of the seal must be on the inside of the display housing.
2. Clamp the bottom plate of the display housing on the sealing rib (see ② in figure 10).
3. Press the bottom plate up.
4. Mount the bottom plate by means of screw ③ removed before.

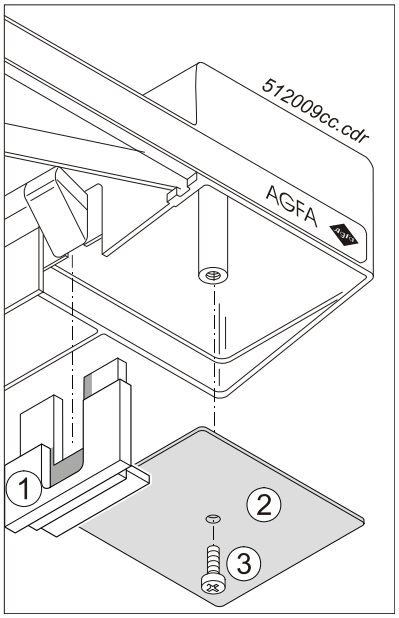

Figure 10: Positioning of the seal

The seal prevents light from leaking in.

7 Mounting the guide bracket on the light tight cover

1. Place the washer and the spring washer on the screw.
2. Slide the screw Ⓐ through the previously drilled hole from the inside of the film feed table.

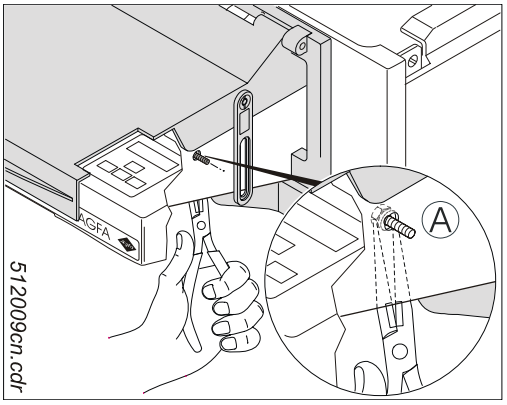

Figure 11: Positioning the screw

We recommend to use pliers to guide the screw (plus washer and spring washer) through the drill hole (see figure 11).

3. Mount the enclosed spacer bushing Ⓑ on the screw from the outside
(see spot in figure 12).

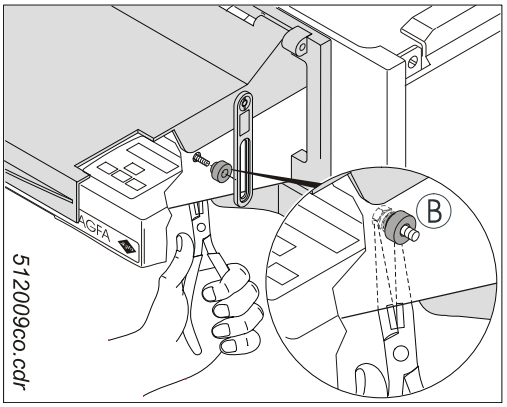

Figure 12: Positioning the spacer bushing

4. Insert the enclosed stud Ⓒ through the recess of the guide bracket across the screw (see spot in figure 13).
5. Connect the stud and the screw (see figure 13).

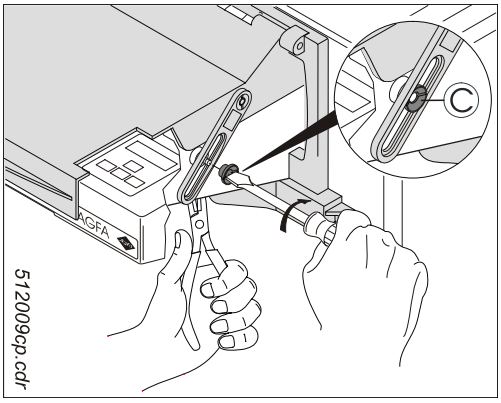

Figure 13: Guide bracket with screw connection

Install the guide bracket on the other side of the film feed table in the same way.

8 Completion of the modification

1. Insert the racks again.
2. Mount the machine cover.
3. Switch the machine back on.

Modifications

10

Section 10

describes subsequent modifications in the machine resulting from technical changes.

Chapter 10: Intentionally left blank.

Technical Standard Modifications

11

Section 11

contains an overview of all technical modifications. This refers to hardware as well as software modifications.

Chapter 11

Contents

1 Introduction of the Processor Software CLLC_1203 (CM+9 5270 9410 1) 1

1 Introduction of the Processor Software CLLC_1203 (CM+9 5270 9410 1)

Introduction as production standard:

	Type 5270 / 100	Type 5270 / 105
as of SN	**4730**	**1138**
and	**-**	**-**

Description:
The introduction of Processor Software CLLC_1203 solves dryer problems.

Maintenance

12

Section 12

describes all routines and tests necessary during maintenance.

HEALTHCARE
Sales & Services >
Global Services Organisation

Technical Documentation

Order No.: DD+DIS302.03E

1 piece WACH4 MA 1

Classic E.O.S.

Type 5270 / 100

Classic E.O.S. CL

Type 5270 / 105

Maintenance Instructions

Internal Update #5

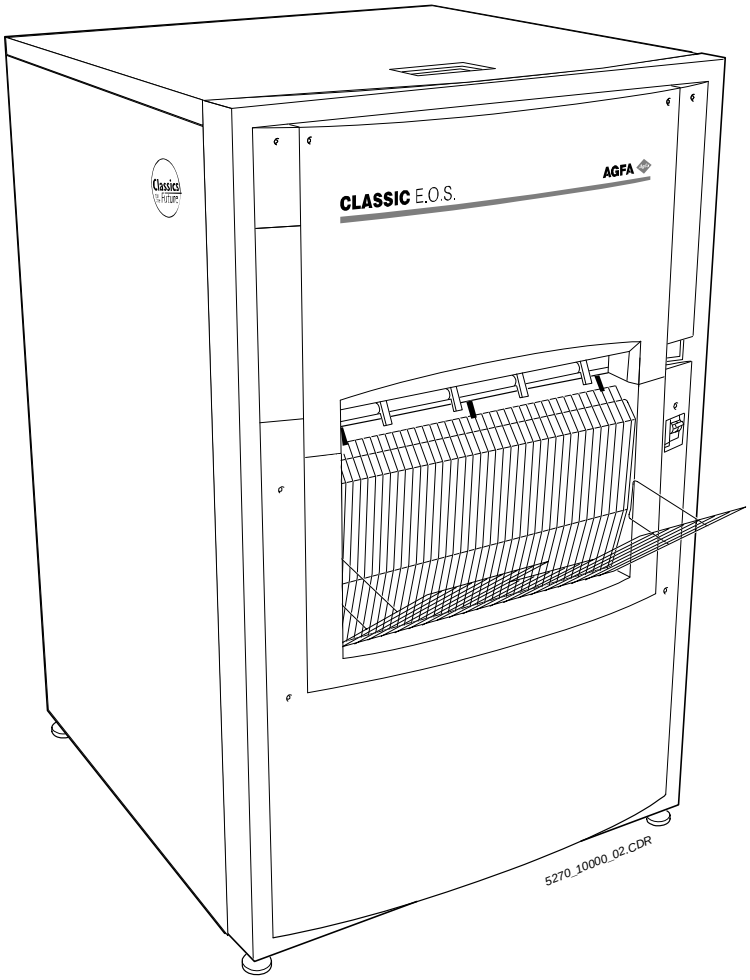

The Maintenance Instructions can also be ordered separately.
Order number: DD+DIS302.03E

printed in Germany 03 / 2004

AGFA

Caution:

This system uses mains voltage. Please observe the pertinent safety instructions.

These instructions describe adjustments and routines,
which must only be performed by qualified technical personnel.

Note:

Electrical repairs and connections must only be made by certified electricians.

Mechanical repairs and connections must only be made by certified technicians.

CE Declaration:

According to the medical directives the CE Declaration
(CE Conformity) becomes void if the product is modified without permission of the manufacturer!
This applies to all parts, not only the safety devices!

We reserve the right to change data and characteristics in the light of technical progress.

Chapter 12

Contents

1 Safety 1

1.1 Safety check 4

1.2 Safety switches 5

1.3 Checking the function of the GFI switch 0FI 6

2 Required Tools and Maintenance Materials 7

2.1 Special tools 7

2.2 Auxiliary equipment 7

2.3 Lubricants 7

2.4 Cleaning instructions 8

2.5 Protection material 8

2.6 Spare parts kits 9

2.7 Cleaning substances: 9

3 Maintenance 10

3.1 Maintenance instructions 10

3.1.1 How to use the maintenance instructions 10

3.1.2 Maintenance procedure 10

3.2 Maintenance intervals 11

3.3 Analysis 11

3.4 Maintenance Preparations 13

3.5 Checking, cleaning, and general care 15

3.6 Cleaning the rack and tank systems 21

3.7 Functional test 21

3.8 End of maintenance 22

4 Machine Care by the Customer 24

Appendix:
Maintenance Checklist ..... page 1-3

1 Safety

General safety instructions

- The machine must only be used as described in the operating instructions. Any other use may result in damage to the machine, or may affect the machine function with the consequence that the machine can no longer be used as intended, and therefore presents a risk for patients, user and environment.
- The machine must only be operated by qualified personnel trained on the machine.
- Ensure that only trained personnel have access to the machine.
- Ensure that the machine can always be supervised and that any tampering is prevented.
- Repairs or modifications on the machine must only be performed by trained service personnel authorized by AGFA.
- In case of visible damage on the machine housing the machine must not be operated or used, and must immediately be disconnected from the mains.
- Built-in or external safety devices must not be circumvented or disabled.
- Disconnect the machine from the mains before starting any maintenance.
- If a mains connection is absolutely required these maintenance routines must only be made by specially trained personnel.
- Like all technical devices, this machine must be operated, cared for and serviced correctly as described in the documentation provided with the machine.
- If the machine is not operated correctly, or if it is not serviced correctly, AGFA will not be liable for any resulting disturbances, damage or injuries.
- When installing the machine make sure that either the mains plug or an all-cable disconnecting device is provided in the internal installation close to the machine and is easily accessible.
- If the machine is connected with other components or assemblies, AGFA will guarantee safety only for combinations which are approved by AGFA.
- In case of conspicuous smoke or noises, immediately disconnect the machine from the mains.

Special instructions for the handling of chemicals

- When handling chemicals, always observe the applying safety and environmental regulations, as well as the operating and warning instructions pertaining to these chemicals.
- Wear stipulated protective clothing and safety goggles.

- When disposing of chemicals and waste water, you must comply with the local regulations and the provisions for environmental protection.
- If photo-chemicals get in your eyes, proceed exactly according to the warning instructions and/or the instructions published by the manufacturers of the chemicals. If required, immediately rinse your eyes with cold water. Afterwards a physician must be consulted immediately.
- Avoid inhaling of chemical fumes. Make sure that there is sufficient

ventilation at the installation site of the machine, i.e. an air exchange that is at least ten times the room volume per hour.

- Always comply with the installation instructions.
- Verify tightness of all connections for chemicals and water, as well as waste water, on the machine in regular intervals. At least check whenever suggested in the operating instructions and/or service instructions.
- If solution gets into the inside of the machine (e.g. by spilling during tank filling), the machine must immediately be disconnected from the mains and cleaned thoroughly by the service personnel.
- Do not use additional chlorine or chlorine containing substances inside the processor. The use of additional chlorine or chlorine containing substances can lead to irreversible damage of the equipment. Using these substances may void the manufacturers warranty.

The film processor must not be operated in the direct vicinity of the patients as defined in EN60601-1 and IEC 601-1.

In addition to the safety regulations mentioned in this document the country specific safety regulations must be observed!

These maintenance instructions are to be considered confidential.

The instructions refer to the following components of the film processor:

- Film feed table
- Transport units
- Main drive
- Circulation pumps and their drive
- Dryer / IR-heaters
- Replenishment system
- Tank and hose system / tank heaters
- Water connections / water filter
- Electrical connection

Disconnect the machine from the mains before starting any maintenance and/or repair activities. If a mains connection is absolutely necessary this maintenance and repair work must only be made by specially trained personnel.

1.1 Safety check

Electrical check

- Check the power cable and the cables inside the machine for damage.
- Check the strain relief of the power cable.
- Check the line fuses for the required value.
- Check the function of the air filter and the cooling.
- Check the cable connections and plug for burnt spots.
- Check the grounding connections at the metal panels and housing.

Upon repairs regarding the mains voltage the protective earth must be checked (VDE standard). The resistance of the PE with an earthed pin connector is ≤ 0.3 Ohm, with a fixed connection it is ≤ 0.2 Ohm (according to VDE 0702, VBG4, Edition 1997).

1: Internal circuit of the machine to be tested

2: Measuring equipment for testing the protective earth resistance

3: Connection between meter and protective earth

4: Connection between meter and conductive parts which may be touched in the machine to be checked

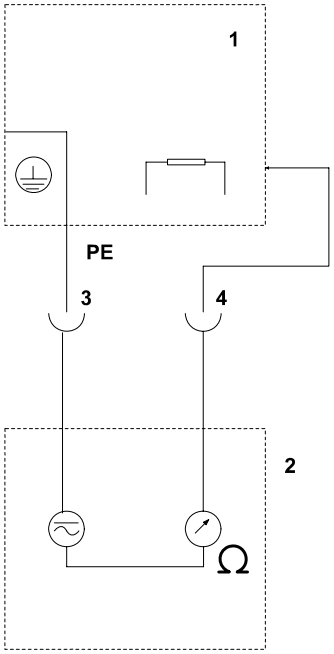

Figure 1

When measuring the resistance consider that the total value always includes the resistance of the measuring cable.

1.2 Safety switches

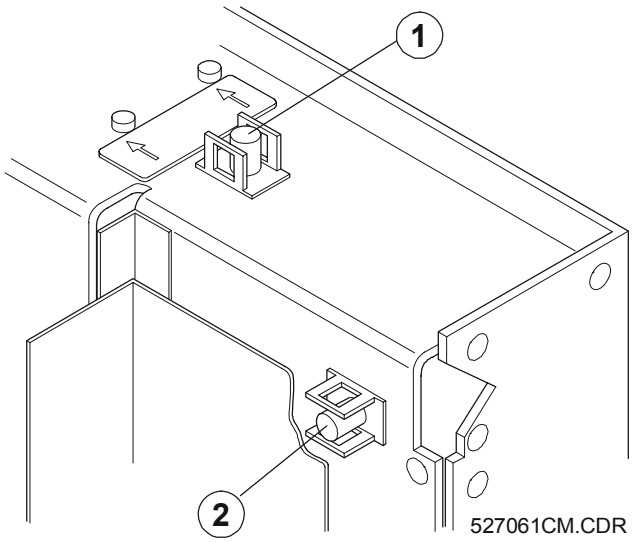

Figure 2

① = Safety switch (cover) 0SW2

② = Safety switch (dryer flap) 0SW3

To ensure safety of the customer the machine has two safety switches.

For service purposes the function of the safety cover switch can be overridden with a service key (locking pin CM+9042663090). However, be careful, there is a risk of injuries by moving mechanical or electrical parts.

Make sure to remove the locking pin before closing the covers.

Otherwise the cover switch may be damaged or the adjustment position is lost. The safety function for the customer is then no longer effective.

But even in case of interrupted safety switches 0SW2 ① and/or 0SW3 ② and with the mains switch 0SW1 (0S1) off, there is still power applied on the following components as long as the power cord is plugged in:

- Ground fault interrupter 0FI
- Mains switch 0SW1

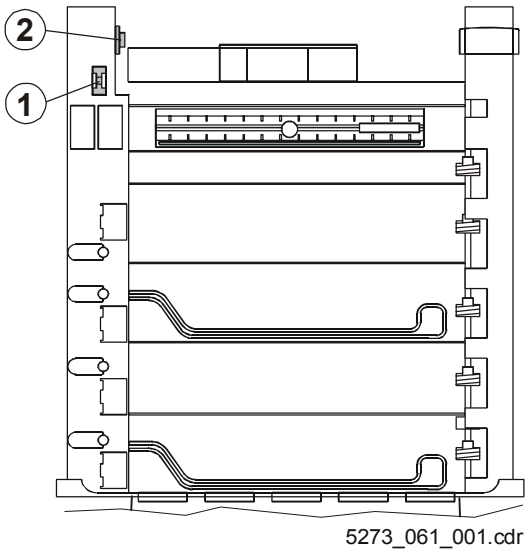

Figure 3

1.3 Checking the function of the GFI switch 0FI

A GFI switch: (I_N = 30 mA in compliance with VDE 664) is integrated in the machine.

Check the function of the ground fault interrupter (GFI switch).

① Press the button, this releases / deactivates the GFI switch!

② Activate the GFI switch by resetting the toggle switch.
(No automatic reset)

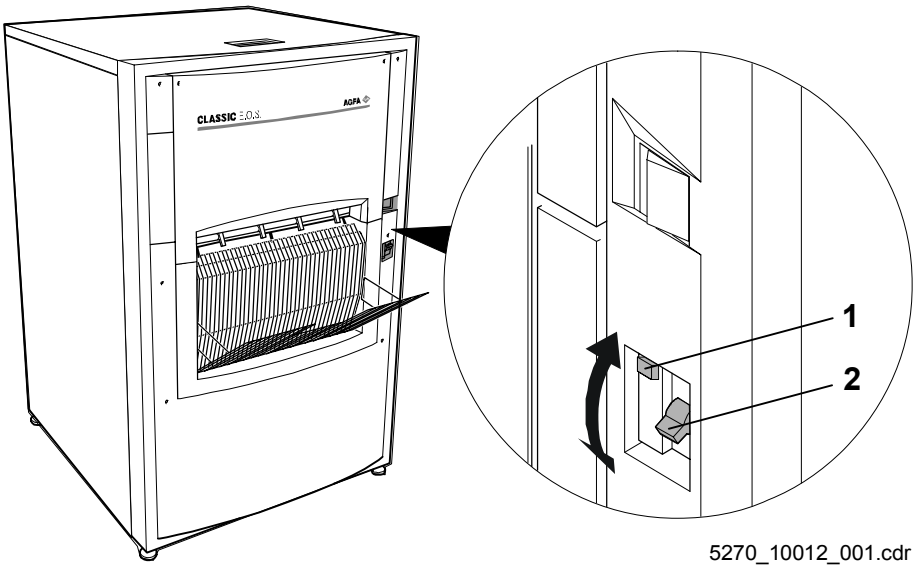

Figure 4

Information for the customer: This routine must be repeated 1x per month.

The machine must not be put in operation without an installed GFI switch!

2 Required Tools and Maintenance Materials

2.1 Special tools

In addition to the normal equipment the following tools are required:

Order number	Tool description
CM+9042663090	Locking pin (service key, order two keys)
commercially available	Graduated beaker, 1000 ml (33.82 fl.oz.)
CM+9999902910	Thermometer
commercially available	Bucket, 10 l (338.18 fl.oz.), with liter scale
commercially available	Hose with shower l = 4 m, with coupling for the water tap and shut-off tap
commercially available	Torch or hand lamp
commercially available	Soft dust brush
commercially available	Bottle brush

2.2 Auxiliary equipment

Order number	Designation
CM+9999992360	Kresto hand washing lotion
CM+9999992310	Plastic cleaner
CM+9999915240	Cleaning sponge

2.3 Lubricants

Order number	Designation
CM+9999991360	Ballistol oil
CM+9999992470	Grease Isoflex Topas NB52 (50ml / 1.69 fl.oz)

2.4 Cleaning instructions

SAFETY

For cleaning the machine tanks make sure that the power plug of the machine is disconnected!

Before cleaning, the standard covers and panels must be put on all electrical components!

All cleaning substances may irritate the skin and the eyes. Therefore it is always necessary to use rubber gloves and protective goggles when mixing and using cleaning substances.

Follow the safety instructions of the manufacturer!

Splashes in the eyes or on the skin must be cleaned immediately with water.

During mixing of the cleaning powder avoid breathing of the powder dust.

The cleaning substances may attack the components, especially the rubber rollers. Therefore the reaction time should not exceed approx. 20 minutes. Thorough rinsing with water or neutralizing chemicals is required.

Do not use any spirit or alcohol to clean the rollers!

Disposal:

Always observe the regulations by the local authorities and the pertinent sewage protection laws when disposing of cleaning chemicals and water!

2.5 Protection material

Order number	Designation
CM+9999915040	Protection gloves
CM+9999915050	Protection goggles
CM+9999991550	Protection cream
Buy locally	Work coat / jump suit

2.6 Spare parts kits

We recommend to carry the following parts kits*) for maintenance:

Order number	Designation
CM+05270100731	Repair
CM+05270100733	Maintenance

***)** see general information about spare parts kits (Chapter 8)

2.7 Cleaning substances:

Order number	Designation	ABC Code
Developer tank		
CM+9999992250	BIC EBAREN 86 Cleaner and Neutralizer	EBMBU
Fixer tank		
CM+9999992840	AGFA FIXCLEAN	7352J
CM+9999992000	BIC FIXAREN 80	VSBR6
Water tank		
CM+9999991930	BIC ARGALEX 91 Cleaner and Neutralizer	VR76F
CM+9999992590	BIC OXOCLEAN Water Tank Cleaner	65D1Q
Anti-algae agent		
CM+9999992260	BIC ALGEFIN 86 A	WDQ02
Anti-lime agent		
CM+9999992840	AGFA FIXCLEAN	3752J
CM+9999992210	BIC BIO PVC BECKEN CLEAN	V7W91

3 Maintenance

3.1 Maintenance instructions

3.1.1 How to use the maintenance instructions

All the points listed here (minimum maintenance points) must be carried out.

- The maintenance points have been arranged in a chronologically suitable order to make your work routines as efficient as possible.
- The sequence of the maintenance points in the checklist (see appendix) is identical with these maintenance instructions.
- “Test & Adjust” routines in the integrated service (as of Software CLLC 1107), which support the maintenance work are listed under “auxiliary equipment”.
- If there is a detailed description for certain maintenance points in the service documentation, this will be noted in the column “details”.
- During maintenance please observe the safety regulations in this chapter and in Chapter 6.1.

3.1.2 Maintenance procedure

- **For cleaning the machine tanks make sure that the power plug of the machine is disconnected!**
- **Before cleaning, the standard covers and panels must be put on all electrical components!**
- **Do not use chlorine or chlorine containing substances in the film processor. The use of chlorine or chlorine containing substances may cause irreparable damage in your film processor. Use of these substances may result in termination of the manufacturer’s warranty.**

3.2 Maintenance intervals

If SERVICE INDICATION has been activated in the SERVICE program, the operator will be reminded of a required maintenance according to the selected maintenance cycle.
If the maintenance is due, an alternating display of FILM and MAINTENANCE reminds you daily during the first three film feeds until the maintenance is actually made.
After maintenance this message is reset in the SERVICE program **<Service/Service Settings/Maintenance/Reset ServIndic>** (see Chapter 6.6), if **<Service/Service Settings/Maintenance/Service Indication/ On>** is set.

The following maintenance cycles are recommended:

at least 4 maintenance jobs per year

(depending on various factors, as e.g.:

- less processing cycles,
- water quality (algae growth)
- extent and intensity of general care by the customer
- setup of the <**Service Settings>** (anti-algae)

The maintenance cycles must be entered in the SERVICE program **<Service/Service Settings/Maintenance/Service Interval>** (see Chapter 6.6).

3.3 Analysis

Test points	Measures
Discussion with customer	☐ Discuss current problems with the customer.
Infocounter analysis to determine possible weak points	☐ The infocounter data can be listed directly on the machine display. 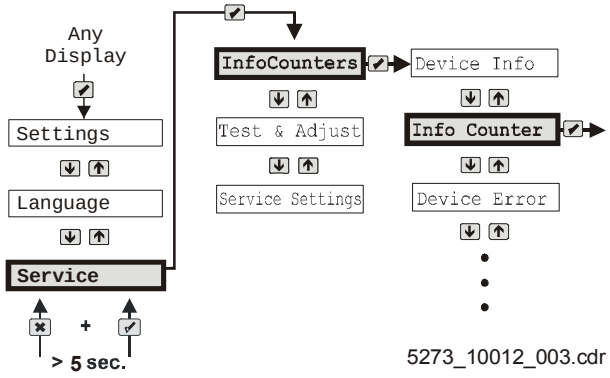 Figure 5

Test points	Measures
For analysis the following information in the **`InfoCounters`** menu must be evaluated:	☐ **`Device Info:`** Display of machine type and installed software version. Update the software if required.
	☐ **`Info Counter:`** **`Maintenance:`** MAINTENANCE shows the last 10 maintenance jobs and the corresponding preset maintenance cycles. **`DEV Repl. Liter:`** Display of the complete amount of replenished developer and the replenished amount since the last maintenance. **`FIX Repl. Liter:`** Display of the complete amount of replenished fixer and the replenished amount since the last maintenance. **`Film:`** Display of the complete amount of processed film and the processed film since the last maintenance in square meters. **`JOG Cycle:`** The film consumption of the last 10 days is displayed together with the date, the amount of film and the selected jog-cycle (ON-OFF-AUTO). **`Pump Calibr.:`** At this option the time of the respective pump calibration with the adjusted calibration rates and the adjustment mode (DEV/FIX) can be displayed. ☐ **`Device Error:`** The (maximum) 100 last errors are recorded in plaintext together with date and time. ☐ **`Error Hit List:`** The previously occurred errors are displayed sorted according to their occurrence frequency and with error number and list position.

The `Error hit list` is the main basis for planning the maintenance work. Thereby the maintenance work concentrates on the components which caused the majority of problems.

The initial causes of problems are to be solved and damaged or worn components are to be replaced! (See Chapter 6.3)

Test points	Measures
	☐ **Logbook:** The actions of the machine are recorded after switching on and can be viewed here in plaintext together with date and time.
	☐ **Runtime:** Runtime shows the total number of operating hours.

3.4 Maintenance Preparations

Steps	Sub-steps
Disconnecting the machine from the mains	• Switch off the machine • Unplug the power plug
Remove covers and panels	• Remove machine cover and side panels
Drain tanks	• Open shut-off valves in developer, fixer, and water tank and drain the solutions
Remove racks	• Remove racks with guides from the tanks

3.5 Checking, cleaning, and general care

	Module	Check	Cleaning and care	Tools	Details
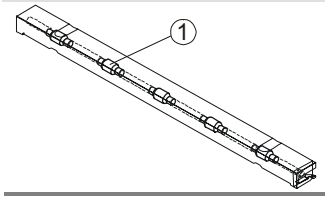	**Film scanner rollers** Scanning rollers with antistatic hose (1)	• for smooth turning • for centered hose position on the roller • for cracks in the hose surface	• if dirty clean carefully under running water	-	-
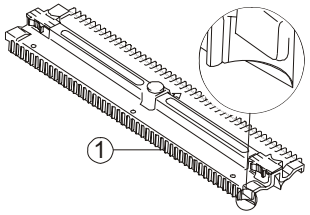	**Rack guides** Guide fingers (1)	• for a smooth surface of the guide fingers	• if dirty clean carefully under running water	Sponge	Chapt. 6.5
		Handle the rack guides with care to avoid scratches and damage.			
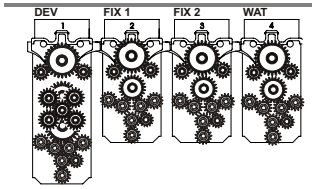	**Rack system** Water, fixer, and developer racks	• for smooth operation	• for cleaning remove the panels on the rack drive side	Screwdriver	Chapt. 6.5
		Gears are only plugged on but not secured. **Handle the racks in such a way that the gears stay in position.**			
	Gears	• the tooth faces and gear meshing	• use a bottle brush or sponge to clean from deposits • replace defective parts if necessary	Bottle brush, sponge	Chapt. 6.5

	Module	Check	Cleaning and care	Tools	Details
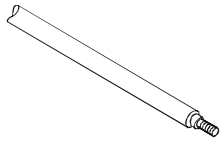	Rollers / shafts Bearings without springs	• roller surfaces / bearings / shafts for wear and smooth operation • axial play of the rollers	• if dirty clean carefully under running water	Sponge cleaning agent	-
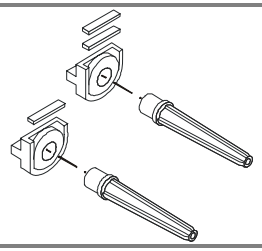	Bearings with springs	• bearings / spring for wear • roller pressure	• replace defective parts	-	-
WAT 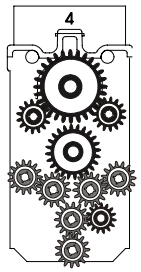	**Water rack**	• shaft / bearing and drive for lime deposits	• cleaning with “BIC BIO-PVC BECKEN CLEAN” possible • if necessary, apply concentrated cleaner on the gears, allow to soak and then rinse with water • for shafts and bearings prepare a cleaning bath	BIC BIO PVC BECKEN CLEAN	-
		Gears are only plugged on but not secured. **Handle the racks in such a way that the gears stay in position.**			
DIS / DRY 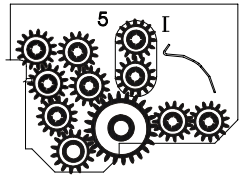	**Distributor rack**	• for smooth operation • tooth faces / axial clearance. • roller surface (especially the foam roller) for wear and contact pressure • shaft bearing for wear • rollers for dirt	• only clean the distribution rollers carefully in case of visible dirt using a soft sponge	Sponge	-
		Avoid the contact of grease on the surface of the rollers.			

	Module	Check	Cleaning and care	Tools	Details
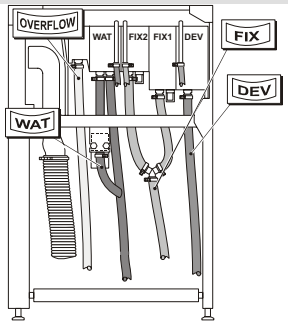	**Tank and hose system** Drain + overflow pipes	• for leaks / tightness of the system • hose clamps for tight connection • hoses for algae growth and dirt deposits	• replace very dirty or very old parts	-	-
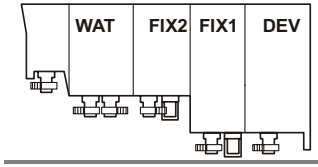	Developer, fixer, and water tanks	• for dirt deposits and algae growth	• clean the tanks with sponge, water, or tank cleaner and then rinse thoroughly with water	Sponge cleaning agent	-
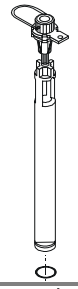	Tank shut-off system	• system for tightness • O-rings for perfect condition	• replace defective O-rings if necessary	-	-
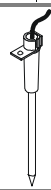	**Level sensors / temperature sensor**	• for dirt deposits and algae growth	• remove deposits from the electrodes	Sponge	-

	Module	Check	Cleaning and care	Tools	Details
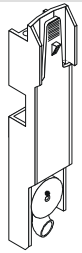	**Circulation pumps** Pump ducts	• for dirt and crystalline deposits	• clean pump ducts / pump housing / pump rotor thoroughly under running water using a brush • replace if very dirty	Brush	-
		Upon assembly, the magnet of the pump rotor must face the outer tank wall when the pump duct is inserted!			
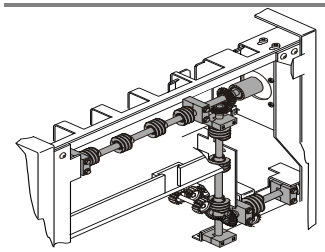	**Drive shafts**	• worm gear faces / gear meshing	• clean carefully using a damp sponge • lubricate the worm drive slightly	Sponge Cleaner Isoflex Topas NB52	-
		Liquid on the Control Board and in the electronic section must be avoided.			
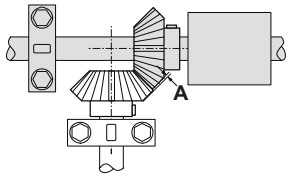	Bevel gears	• for play (max. 0.5 mm)	adjust the bevel gears if necessary	-	Chapt. 6.5
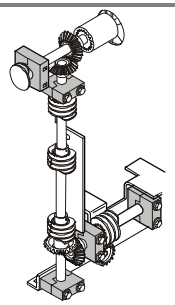	Drive shaft bearings	• for wear	replace bearings if necessary	-	-

	Module	Check	Cleaning and care	Tools	Details
	Coupling unit to drive motor	• for complete connection		-	-
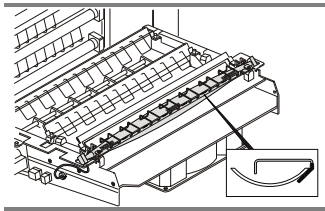	**Dryer** Infrared heater, reflector, crossflow fan, convection heater	• if the glass body of the infrared heater is undamaged • reflector for dirt • “film guides” (wire)	• remove the dust with a soft brush	Brush	-
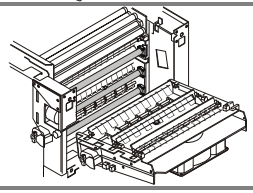	Dryer rollers	• dryer rollers for dirt	• only clean with a damp cloth where dirt is visible	-	-
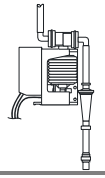	**Replenishment system**	• check for tightness • filter on replenisher pump for dirt	• replace the filter if necessary	-	-
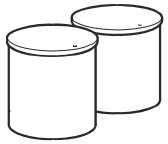	**Replenisher tanks**	• for dirt in replenisher tanks	• rinse if necessary	Brush, sponge	-
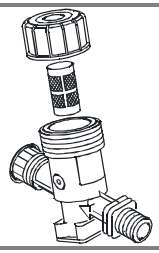	**Water supply** Water filter / solenoid valve	• filter insert for dirt • connections on the solenoid valve for tightness •	• clean filter with a brush under running water	Brush	-

	Module	Check	Cleaning and care	Tools	Details
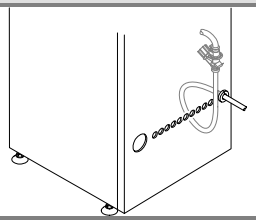	Water pressure hose	• for tightness / sharp bends / cracks due to aging	• replace the hose if necessary	-	-
	Electrical connection	• all connections for tightness		-	-

3.6 Cleaning the rack and tank systems

Steps	Sub-steps
Preparing racks and tanks	• Mount the rack covers. • Insert the racks without the guides. • Close the tanks. • Fill the tanks with water and the respective cleaning agent. • Put the machine in operation.
	Make sure to observe the safety instruction regarding the handling of chemicals! See Chapter 1.
Cleaning and checking for tightness	• Call up the cleaning mode in the service program `<Service Settings / Cleaning Mode>`. • Check the hose and tank system for tightness. • The cleaning mode finishes after approx. 20 minutes. • Switch off the machine and unplug the connection to the mains. • Dispose of cleaning substances in compliance with local regulations. • Open the tanks and drain them. • Take out the racks with guides. • Rinse tanks and racks thoroughly with fresh water.

3.7 Functional test

Steps	Sub-steps
Start operation	• Insert the racks. • Close the tanks. • Put the machine in operation (see Chapter 3).
Check the rack drives	• Check meshing of worm gears, main drive and gears of the rack system.
Check the circulation	• Check if LEDs of the synchro-motors are on. • Check circulation of the solutions – movement on solution surface.
Replenishment pumps	• Calibrate the replenishment pumps (see Chapter 3). • Calibrate the developer pump first and then the fixer pump.

Steps	Sub-steps
Water replenishment >3l/min	• Take out the supply elbow and collect the water in a graduated beaker. • Call up the menu **<Test and Adjust / Test Output / Others/ Water Supply>** and the water valve will be triggered for 10s. • Check if the water rate is > 0.5l.
Insert the guides	• Mount the guides on the racks – watch numbering on racks and guides!
Check the dryer and transport	• Feed several test films. • Check drying of the test films. • Check for smooth film transport through the machine.
Film scanner rollers	• Call up the menu **<Test and Adjust/ Test Input / Scanners>**. • Feed film. • Check the function of the scanner rollers.
Check the processing quality	• Process test wedges and check the results.

3.8 End of maintenance

Steps		Sub-steps
Close the machine		• Connect all ground connections and mount all the side panels.
	Splashes on the panels caused by photo chemicals / cleaning chemicals must be removed immediately if possible. **When they dry they cause stains which are very hard to get off.** **To clean the panels only use water and common household cleaners (without solvents!).**	
Feed test films		• Run a test with all the film sizes and using all operating modes!

Steps	Sub-steps
Reset the service interval	• Call up the menu **<Service Settings / Maintenance / Reset Servindic. >** and confirm with YES. • Check the Service indicators in menu **<Service Settings / Maintenance / Service Indic. / Service Indikat. / ON>.**
Reset the infocounters	• When leaving the Service program **<Service/InfoCounters /Info Counter/Clear TMPcountr.>** confirm with YES.

4 Machine Care by the Customer

The customer must be informed that regular cleaning and care is necessary in a film processor.

For an exact description of the cleaning and care jobs refer to the Operation Manual.

TYPE 5270/100

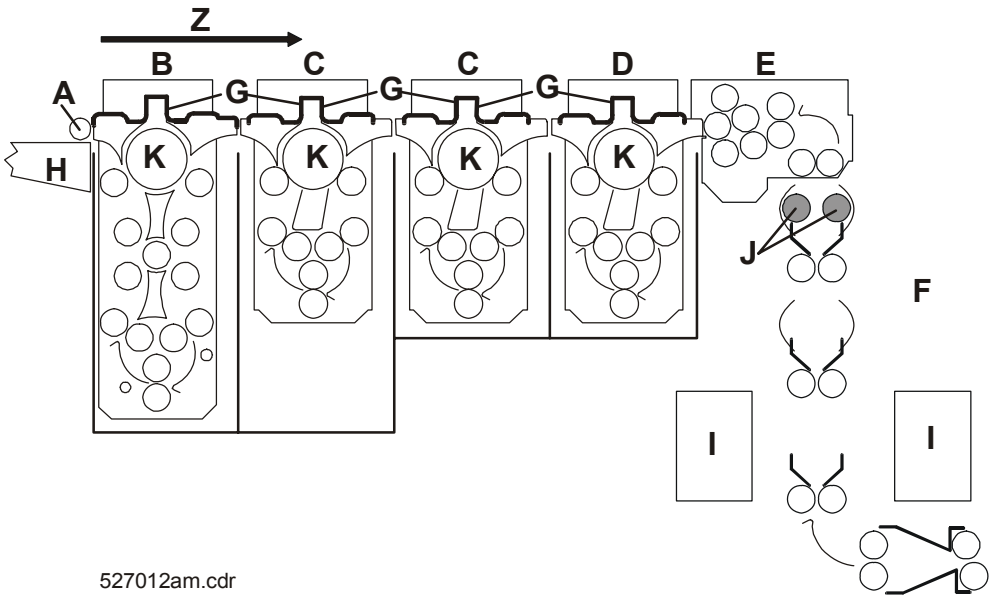

Figure 6

TYPE 5270/105

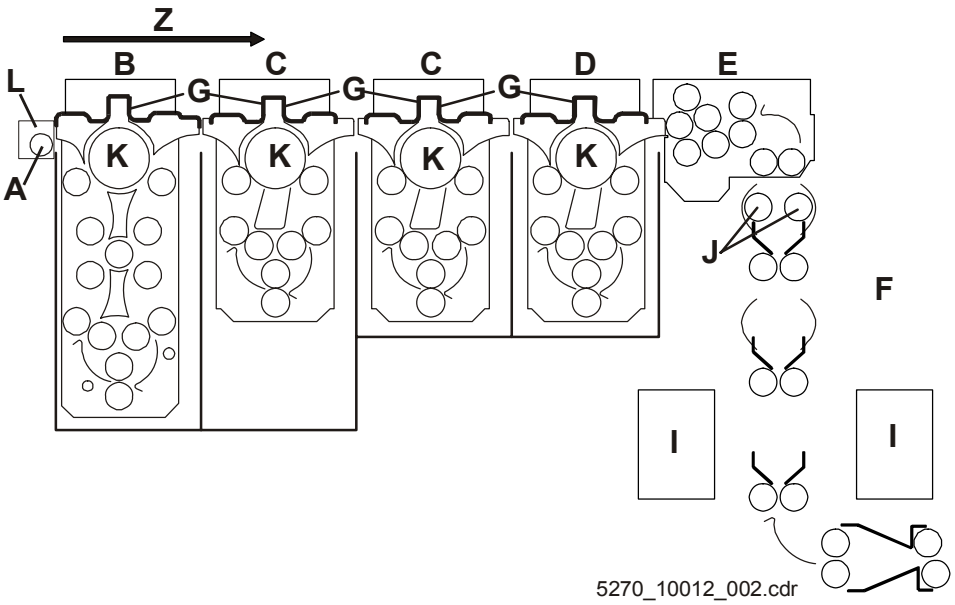

Figure 7

A Film scanner rollers
B Developer tank / developer rack
C Fixer tank 1, 2 / fixer rack 1,2
D Water tank / water rack
E Distribution rollers
F Dryer
G Upper rack guides (crossovers)
H Film feed table
I Dryer: Cross flow fan
Convection heater
J Dryer: IR-heaters
K Racks: central roller / main drive
Z Film transport direction

Interval	Action (care)
Daily	Clean the film feed table (H) daily with a damp cloth or a soft sponge, and then dry it.
Weekly	Rinse the upper rack guides (G) with warm water.
Every 3 months	Clean the distribution rollers (E) with a damp sponge. Rinse the circulation pumps of all tanks (B, C, D) under running water. Clean the transport rollers of the dryer (F) with a damp sponge.
Every 6 months	Clean the water filter.

Classic E.O.S./ Classic E.O.S. CL

Type 5270/ 100/ 105

Work Instruction for order no. **SN**

Maintenance must be carried out according to the maintenance instructions DD+DIS302.03E

Remarks (by the customer):

INFO Logbook and/or Device Error *)

Problem	Number of occurrences (date)

*) Listing of the error messages since the last maintenance:

By evaluating the “infocounter” information the main focus for the upcoming maintenance can be determined.

INFO consumption and/or infocounter consumption

	Total	since last deletion
FILM developed		
Developer consumption		
Fixer consumption		

Cleaning		OK	n. OK
Film scanner rollers	Clean only if dirty		
Rack / guide units (crossovers)	Clean and rinse carefully		
Gears	Clean and rinse carefully		
Level sensors	Check for dirt, clean		
Drive shafts	Check for dirt, clean		
Tanks / drain hoses	Check the developer / fixer for crystalline deposits and check the water tank for algae growth; drain the tank and clean it.		
Circulation pumps dev./fix./water	Check for dirt, clean		
Dryer rollers	Clean with damp sponge		
IR-heaters, reflector plates / cross-flow fan	Remove all dust with a soft brush.		
Distribution rollers	Clean with damp sponge		
Replenisher tanks	rinse if necessary		
Water supply solenoid valve / filter	Check / clean		
Chemicals	Mix fresh solutions.		

Check the wear parts		OK	n. OK
Film scanner rollers	Check for smooth operation, check hose for cracks and position.		
Transport units	for smooth operation		
Gears	Check the axial play / check general condition.		
Rollers / shafts / bearings with springs	Check for wear, uniform drive, and pressure.		
Distribution rollers	for smooth operation		
Rack guide units (crossovers)	Check for smooth surface.		
Drive shafts			
Worm shaft / worm gears	Check the gear meshing and lubricate the worm shafts.		
Bevel gears	Check for play		
Bearings	Check for wear		
Coupling unit	Check the connection.		
Circulation pumps			
Function in dev./fix./water	Check for noises / crystalline deposits / algae growth		
Solution circulation	Check the surface movement on the tanks.		
Dryer	Check film drying.		
IR-heaters	Check the function / check glass body for discoloring.		
Reflector plates, film guide units	Check visually and clean if necessary.		
Replenishment system			
Replenishment rate	Check the NOMINAL values by measuring.		
Replenishment pump, stop valve	Check		
Filter on pump	Check / replace if necessary		

Functional test		OK	n. OK
Developer temperature	Compare NOM / ACT temperature and adapt		
Fixer temperature, 34°C, fixed	NOM temperature in fixer tank reached?		
Film drying	Check if films are sticking.		
Dryer step setting	Check the clock and the brightness.		
Transport function in wet / dryer section	Feed film and watch the transport.		
Film scanner rollers	Check in the SERVICE program.		
Processing quality	Check		
Circulation pump drive – synchro motors (left hand machine side)	Red pilot lamps are on		

Safety check		OK	n. OK
Tank and hose system	Check for leaks.		
Tank shut-off system	Check for leaks / tightness.		
Hose connections	Check		
Water drain / overflow (algae growth)	Check for beginning clogging, clean if necessary.		
Level detection	Check, clean if necessary / check the position in the mounting plate.		
Water connections			
Check the filter / water supply solenoid valve.	Clean		
Water supply rate	Check		
Water high pressure hose	Check for good condition.		

Check for electrical safety		OK	n. OK
Electrical connection			
Terminal strip XK1 on PCB1 (GS1)	Check and tighten the screw connections if necessary.		
Condition of the electric cables and the mains plug	Check		
Plug connections / ground connections	Check for tight connection.		
Cover switch	Check (electrically and mechanically).		

Options and Accessories		OK	n. OK
Integrated accessories	Functional test		

End of maintenance		OK	n. OK
End of maintenance	Check if all ground connections are plugged in.		
	Check the function with film.		
	Delete infocounters		
	Start a new maintenance cycle in <Service / Service Settings / Maintenance / Reset ServIndic>! (otherwise the service request will not be cleared)		

Date / Signature Service Engineer: **Customer**

Copyright © 03.2004 DD+DIS302.03E Agfa-Gevaert AG
All rights reserved

Published by

Agfa-Gevaert AG
Fototechnik
Tegernseer Landstraße 161
D - 81539 München

Misprints, errors, and technical modifications reserved

AGFA and the Agfa-Rhombus are trademarks of Agfa-Gevaert AG, Germany

AGFA

Fieldservice Bulletins

13

Section 13

contains the Fieldservice Bulletins, this is urgent and important information (usually on individual sheets) e.g.:

- Errors with safety aspects
- Errors in the series which can be restricted to a certain time or batch
- Special logistic actions

HEALTHCARE
Global Services Organisation

Field Service Bulletin No. 01

Order No.: DD+DIS157.04E

1 piece WVX7U MA 1

Classic E.O.S.

Type 5270 / 100 / 105

Urgency	Reason	Subject
○ immediately	○ Safety	☐ Cure for Complaint (PowerHelp)
○ Next service	○ Reliability	☐ Problem may concern all devices
⊙ **In case of failure**	⊙ **Quality improvement**	☐ Problem depending on serial number / batch
○ As required	○ Functional changes	☑ **New spare part**
	○ Compatibility	

Control Board PCB1 (CM+9 5270 9450 0) and Processor SOFTWARE CLLC1107 (CM+9 5270 9410 0) available as Spare Part

This document describes the functions of Control Board PCB1 and Processor Software CLLC1107 as well as the features different to the previous version.

- For an overview of valid FSBs refer to the order list, see MedNet - GSO Library.

printed in Germany 06 / 2004

Agfa Company Confidential

AGFA

1 Control Board PCB1 (CM+9 5270 9450 X)

Subject

With order number CM+9 5270 9450 X we introduce the PCB1 as successor of CM+9 8405 6940 X.

This board is not a successor for Control Board CM+9 5270 7850 X.

(1) For the installation of Control Board CM+9 5270 9450 X observe the following table:

Machine	Type	Production standard as of SN
Classic E.O.S.	5270 / 100	4500
Classic E.O.S.	5270 / 105	1500

Scope of delivery:

- Control Board pre-assembled in the screening plate, **including**
  - software for the Film Processor IC50 / IC51 Version CLLC1107
  - clock chip IC-CMOS-DS 12887
  - PLD programmed IC88 V1001
- Enclosure for Control Board DD+DIS344.03DEF

The following spare parts can also be ordered individually:

Designation	Order number
• Software for film processor IC50 / IC51 Version CLLC1107	CM+9 5270 9410 X
• Clock chip IC-CMOS-DS 12887	CM+9 0441 7030 X
• PLD programmed IC88 V1001	CM+9 5270 7717 X

Required time:

1 h

Required tools:

- Phillips screwdriver size 2, magnetic
- IC extraction tool CM+9 9999 1005 0
- Grounding strap CM+9 9999 0830 0

Agfa Company Confidential

1.1 New functions

The installation of Control Board CM+9 5270 9450 X **together with the Processor Software CLLC1107 included in the shipment** offers the following additional functions:

- Level of fixer2 can be monitored individually.

Condition is:

- a level sensor present in the fixer2 tank and ST76 plugged

- The circulation pumps can be monitored individually.

Condition is:

- modified cable connections
  (as of SN 4500 for Type 5270 / 100 and as of SN 1500 for Type 5270 / 105)

There are not plans for a modification of these cable connections in the field.

1.2 Compatibility

Control Board CM+9 5270 9450 X can only be installed in the machines in combination with the Processor Software CLLC1107 which is included in the shipment.

Control Board CM+9 5270 9450 X covers all functions of the previous version CM+9 8405 6940 X.

1.3 Optical features for differentiation

Predecessor and successor boards can easily be distinguished by the following features:

- **Reset switch** (S1) – modified layout
- **Clock chip** (IC52) – different position
- **ST80 = ST88** – different position and designation

Predecessor: Control Board CM+9 8405 6940 X (section)

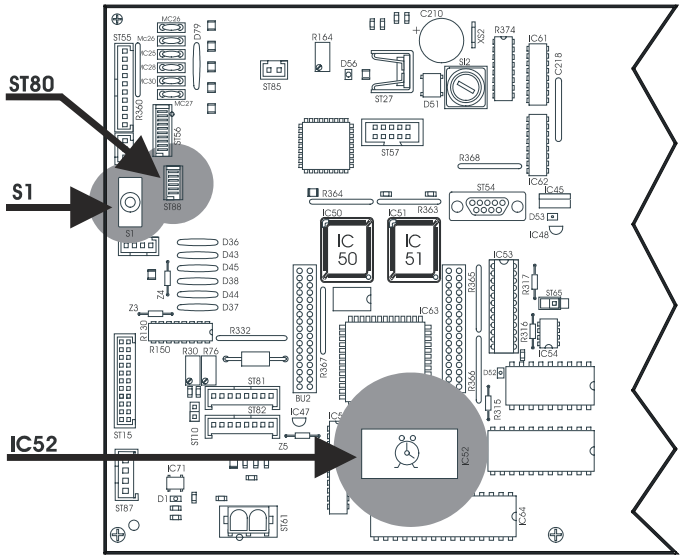

Figure 1

Successor: Control Board CM+9 5270 9450 X (section)

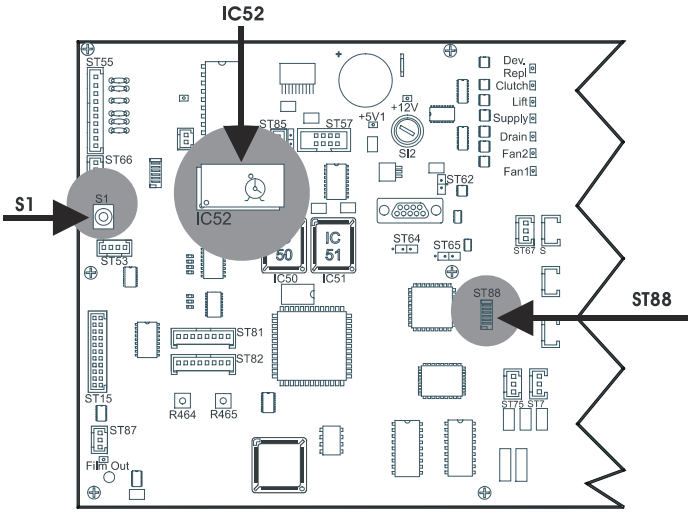

Figure 2

Agfa Company Confidential

2 SOFTWARE CLLC1107 – CM+9 5270 9410 X

Scope of delivery:

- Software set of IC50 / IC51 Version CLLC1107
- Enclosure DD+DIS278.03DEF

Required time:

½ h

Required tools:

- IC extraction tool CM+9 9999 1005 0
- Grounding strap CM+9 9999 0830 0

2.1 New functions

- Level of fixer2 can be monitored individually.

Condition is:

- a level sensor present in the fixer2 tank and ST76 plugged

- The circulation pumps can be monitored individually.

Condition is:

- modified cable connections
(as of SN 4500 for Type 5270 / 100 and as of SN 1500 for Type 5270 / 105)

There are not plans for a modification of these cable connections in the field.

2.2 Compatibility

Processor Software CLLC1107 can only be installed in Control Board CM+9 5270 9450 X.

Control Board CM+9 5270 9450 X covers all functions of the previous version CM+9 8405 6940 X.

HEALTHCARE
Global Services Organisation

Field Service Bulletin
No. 2

Order No.: DD+DIS249.04E

1 piece W1YZR MA 1

Classic E.O.S.
Type 5270/100
as of SN 4500

Classic E.O.S. CL
Type 5270/105
as of SN 1500

Urgency	Reason	Subject
○ Immediately	○ Safety	☐ Cure for Complaint (PowerHelp)
○ Next service	○ Reliability	☐ Problem may concern all devices
⊙ **In case of failure**	○ Quality improvement	☐ Problem depending on serial number / batch
○ As required	⊙ **Functional changes**	☑ **New spare part**
	○ Compatibility	

Introduction of Processor Software CLLC_1203 Order Number: CM+9 5270 9410 1

Control Board PCB1 incl. CLLC_1203 Order Number: CM+9 5270 9450 1

- The introduction of Processor Software CLLC_1203 solves dryer problems.
- Change the software only in case of problems.
- Replace the Control Board PCB1 only in case of problems with the control board.

- For an overview of valid FSBs refer to the order list, see MedNet - GSO Library.

printed in Germany 08 / 2004
Agfa Company Confidential

AGFA

Error symptoms After switching from any dryer level to step 2 there is no drying effect.

Remedy The solution for this problem is integrated in Software Version CLLC_1203.

1 Software CLLC_1203 (CM+9 5270 9410 1)

Scope of delivery:

- EPROM IC 50 CLLC_1203
- EPROM IC 51 CLLC_1203
- Enclosure (DD+DIS205.04D/E/F)

Required tools:
Large screwdriver
Extraction tool for ICs in PLCC housings CM+9 9999 1005 0
Grounding strap CM+9 9999 0830 0

Required time:
0.5 h

Software CLLC_1203 CM+9 5270 9410 1 has been installed in production machines as of the following serial numbers:

Machine	Type	Serial Number SN
Classic E.O.S.	Type 5270 / 100	as of 4730
Classic E.O.S. CL	Type 5270 / 105	as of 1500

Compatibility

Processor Software CLLC_1203 must only be used on the Control Board PCB1 CM+9 5270 9450 X.

This control board is installed in the
Classic E.O.S. series (Type 5270/100) as of SN4500 and in the
Classic E.O.S. CL series (Type 5270/105) as of SN1500.

Software CLLC_1203 must never be installed in the Control Boards GS1 CM+9 5270 7830 X, CM+9 5270 7850 X , CM+9 5270 7960 X.

Agfa Company Confidential

The control boards can easily be distinguished by the following features:

- **Reset switch** (S1) – modified layout
- **Clock chip** (IC52) – different position

Classic E.O.S. (Type 5270/100) up to SN4499
Classic E.O.S. CL (Type 5270/105) up to SN1499
Control Board CM+9 5270 7830 X, CM+9 5270 7850 X , CM+9 5270 7960 X (section)

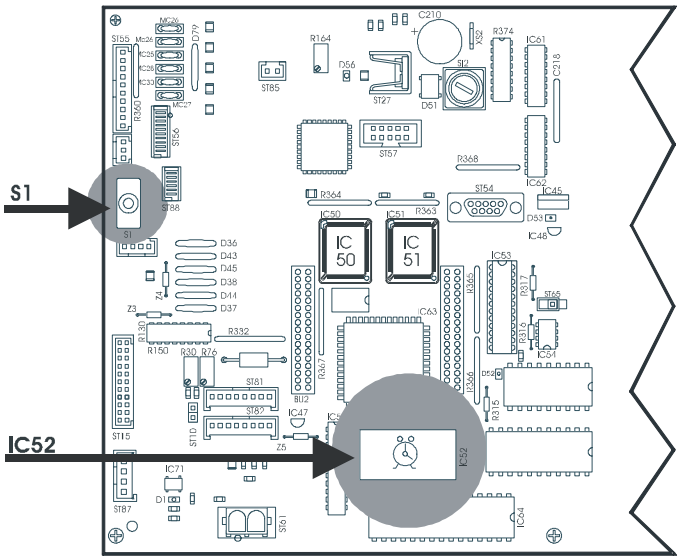

Figure 1

Classic E.O.S. (Type 5270/100) as of SN4500
Classic E.O.S. CL (Type 5270/105) as of SN1500
Control Board CM+9 5270 9450 X (section)

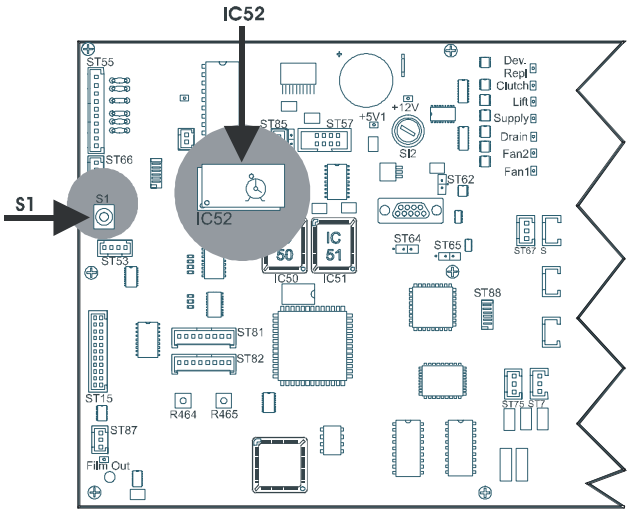

Figure 2

Agfa Company Confidential

2 Control Board PCB1 incl. CLLC_1203 (CM+9 5270 9450 1)

Scope of delivery:

- Control Board pre-assembled in the screening plate, including
  - software for the Film Processor IC50 / IC51 Version CLLC_1203
  - clock chip IC-CMOS-DS 12887
  - PLD programmed IC53 V1001
- Enclosure for the Control Board DD+DIS206.04D/E/F

Required time:

1 h

Required tools:

- Large screwdriver
- Phillips screwdriver size 2, magnetic
- Grounding strap CM+9 9999 0830 0

Control Board PCB1 CM+9 5270 9450 1 has been installed in production machines as of the following serial numbers:

Machine	Type	Serial Number SN
Classic E.O.S.	Type 5270 / 100	as of 4730
Classic E.O.S. CL	Type 5270 / 105	as of 1500

Compatibility

- To ensure compatibility of control board and software install the enclosed Processor Software CLLC_1203 on Control Board PCB1 CM+9 5270 9450 X.

Agfa Company Confidential

HEALTHCARE
Global Services Organisation

Field Service Bulletin No. 3

Order No.: DD+DIS277.04E

1 piece W4WAS MA 1

Classic E.O.S.
Type 5270 / 100
as of SN 4500

Classic E.O.S. CL
Type 5270 / 105
as of SN 1500

Urgency	Reason	Subject
○ Immediately	○ Safety	☑ **Cure for Complaint Com0404010101 (PowerHelp)**
○ Next service	⊙ **Reliability**	☑ **Problem may concern all devices**
⊙ **In case of failure**	○ Quality improvement	☐ Problem depending on serial number / batch
○ As required	○ **Functional changes**	☐ New spare part
	○ Compatibility	

Magnet Not Sufficiently Fixed in the Machine Cover

This document describes the symptoms of an undefined operating status as well as the cause and remedy by fixing the magnet again.

- For an overview of valid FSBs refer to the order list, see MedNet - GSO Library.

printed in Germany 08 / 2004

Agfa Company Confidential

AGFA

Error symptoms

The machine is not ready for operation or switches to undefined conditions between on/off mode.
(**Complaint: COM040401010101)**

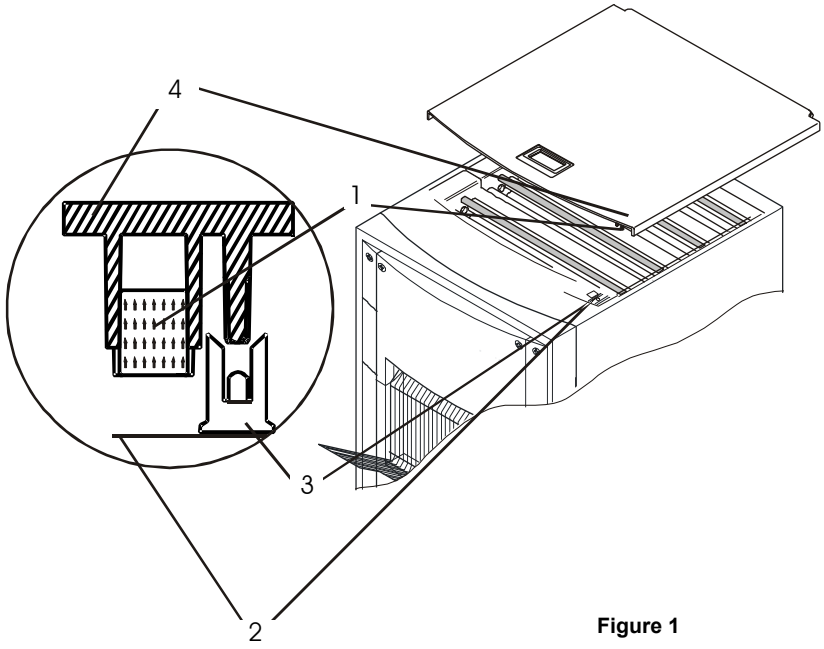

Figure 1

Error cause

The magnet (1) integrated in the cover (4) got loose or dropped out and prevents correct closing of the cover. This impedes the function of the safety switch (3) located on the machine surface (2) partly or completely.

You may assume that the magnet got loose if it is no longer flush with the magnet holder.

Remedy

Use a two-part glue and fix the magnet in its holder, the gap of 0.5 mm must be completely covered with glue.

We recommend the two-part DELO-AUTOMIX 1895 or a similar product with equivalent properties.

We do not supply this glue, please purchase this glue locally.

For the properties of DELO-AUTOMIX 1895 go to the Internet under http://www.delo.de/datenblatt/DELO-DUOPOX_1895_(TIDB-D).pdf.

Agfa Company Confidential

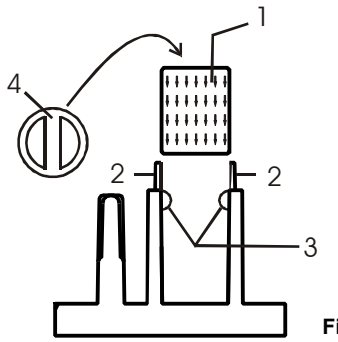

Figure 2

- Clean the magnet and magnet holder from grease and dirt. It is not necessary to remove any remaining glue.
- Prepare the 2-part glue according to the manufacturer's instructions.
- Apply the 2-part glue (3) in the magnet holder (2).
- Insert the magnet (1) with the upper magnet side (4) facing the machine.
- Press the magnet (1) down in its holder (2).

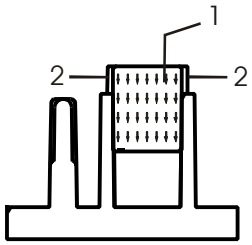

Figure 3

- Fix the magnet (1) aligned with its holder (2).

Required time: ½ h

HEALTHCARE
Global Services Organisation

Field Service Bulletin
No. 4

Order No.: DD+DIS288.04E

1 piece W4XML MA 1

Classic E.O.S.
Type 5270 / 100
as of SN 4500

Classic E.O.S. CL
Type 5270 / 105
as of SN 1500

Urgency	Reason	Subject
○ Immediately	○ Safety	☐ Cure for Complaint (Powerhelp)
○ Next service	○ Reliability	☐ Problem may concern all devices
○ In case of failure	◉ **Quality improvement**	☐ Problem depending on serial number / batch
◉ **As required**	○ Functional change	☑ **New device**
	○ Compatibility	

Introduction of Anti-Algae-Unit Type: 5279/100

This document describes the newly introduced Anti-Algae-Unit Type 5279/100, an optional device for X-ray film processors.

- For an overview of valid FSBs refer to the Order List.
  See MEDNET -> GSO Library.

printed in Germany 08 / 2004
Agfa Company Confidential

AGFA

Subject

The Anti-Algae-Unit has been developed to prevent of algae contamination to the water tank. Therefore, controlled by a timer, Algezid II is pumped to the water tank of a X-ray film processor via an integrated pump. The timer activates the pump in certain time ranges, which are adapted to an average film processing cycle and to the maintenance cycle of the film processor.

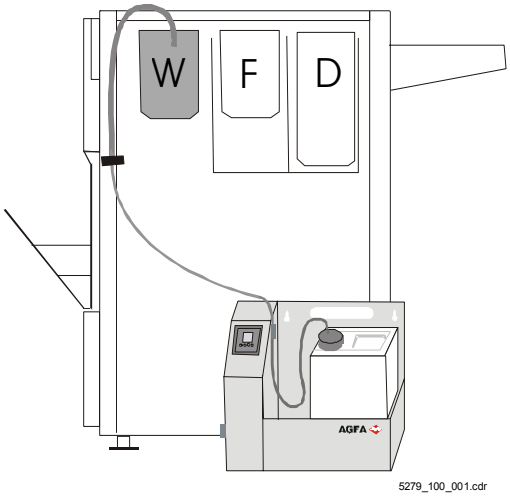

figure 1

The Anti-Algae Unit cannot be used in parallel with the Chiller for developer cooling, since only one optional connection is possible on the water tank elbow.

Algezid II is not included in delivery.

Distribution of Agfa Algezid II:
Contact your local Agfa Service, Art: BUNDZ

Or in USA :
Agfa Corporation, 100 Challenger Road, Ridgefield Park, NJ 07660, USA,
Phone: (001201) 4402500, Fax: (001) 3424742

Order Information

- **Order Number:** CM+9 5279 9100 0
- **Start of production:** 01.08.2004

Documentation

Service documentation and Spare Parts List Anti-Algae-Unit
(order number: DD+DIS126.04E)

Training

There is no training required for FSEs

HEALTHCARE
Global Services Organisation

Field Service Bulletin
No. 5

Order No.: DD+DIS214.04E

1 piece WYZZE 1

Classic E.O.S.

Type 5270/100
as of SN 4500

Classic E.O.S. CL

Type 5270/105
as of SN 1500

Urgency	Reason	Subject
○ Immediately	○ Safety	☐ Cure for Complaint (PowerHelp)
○ Next service	⊙ **Reliability**	☑ **Problem may concern all devices**
○ In case of failure	○ Quality improvement	☐ Problem depending on serial number / batch
⊙ **As required**	○ Functional changes	☑ **New Spare part**
	○ Compatibility	

Installation of the Tank Reinforcement CM+9 5270 9071 0

This document describes the installation of a tank reinforcement that prevents bending of the intermediate tank walls.

- For an overview of valid FSBs refer to the order list, see MedNet - GSO Library.

printed in Germany 11 / 2004

Agfa Company Confidential

AGFA

Error symptoms

The feed rollers of the water rack rub on the intermediate wall

Error cause

Tank wall between fixer and water tank bulges.

In some machines this bulging causes the feed rollers of the water rack to rub on the intermediate wall.

Reason:

- Temperature differences between fixer and water tanks;
- fixer tank full, water tank empty, while the machine is OFF, the intermediate wall is bulging
- parameters effective during tank manufacturing which cannot be influenced.

Remedy

Mounting of a U-shaped tank frame on the upper edge of the intermediate wall between fixer and water tank.
CM+9 5270 9071 _

Scope of delivery:

- 1 x U-shaped steel tank rail
- Installation Instructions DD+DIS104.04D/E/F

Required time:

approx. ½ h

If you have any problems with chemical carry-over from tank to tank when using the tank reinforcement (capillary effect) please order Elastosil E43 separately.

Information about the "Elastosil E43" silicone

Due to strict regulations regarding the shipping of "dangerous substances" the silicone tube is no longer included in the shipment of the tank reinforcement.

Order number: CM+9 9999 9278 0

Agfa Company Confidential

Order No.: DD+DIS184.05E
1 piece YYOOD MA1

Classic E.O.S.
Type 5270 / 100
as of SN 4500

Classic E.O.S. CL
Type 5270 / 105
as of SN 1138

Bulletin Information

	Urgency		Ranking		Subject
○	Immediately	○	Mandatory – safety relevant	☐	Cure for Complaint COMXXXXXXXXXXX (PowerHelp)
○	Next service	◉	**Mandatory for affected systems**	☑	**Problem may refer to machines where the current sensor board has been replaced.**
◉	**In case of failure**	○	Recommended – quality improvement	☐	Problem only concerns devices with serial number // batch
○	If required	○	Only for information		
		○	Not compatible		

Service 574: "IR heater in dryer defective" due to measuring error caused by wrong cable positioning at the Current Sensor Board PCB2.

This document describes how to correct the wrong cable positioning at the Current Sensor Board PCB2.

- For an overview of valid FSBs refer to the order list, in the MedNet -> GSO Library.

Printed versions of this document are not controlled.
The reader should always make sure to use the newest edition of the document available via MedNet .

Error symptoms Service 574: "IR-heater in the dryer defective"

Error cause Wiring error on the Current Sensor Board PCB2 Measuring error caused by wrong cable positioning at the Current Sensor Board PCB2:

one and a half windings around the current sensor generally result in low current values. Monitoring of the IR heater has only minimum tolerances and therefore triggers the error message 574.

Check Check the number of windings around the current sensor:

(1) Switch off machine and disconnect from mains.

(2) Remove top cover and side panels on the left.
Remove the dryer panels.

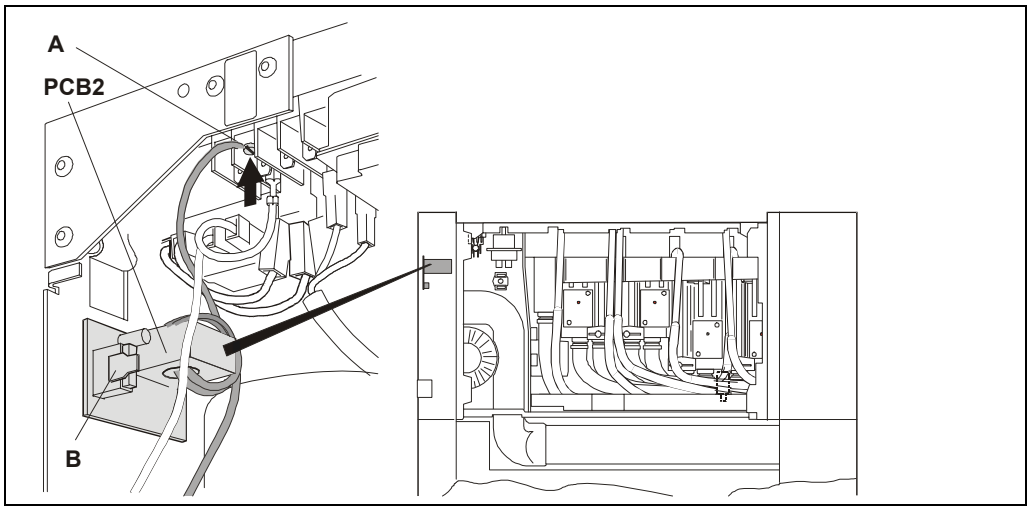

Figure 1

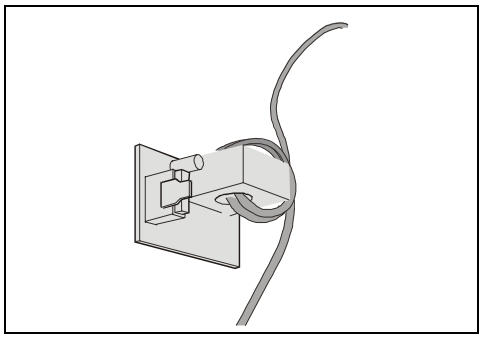

Figure 2

Wrong cable positioning
Continue with Remedy.

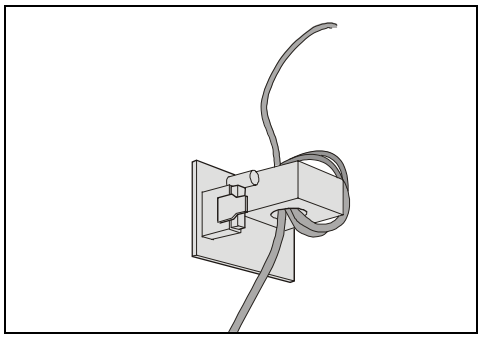

Figure 3

Correct cable positioning
Check completed.

- Mount the covers and panels again.
- Connect the machine to the mains and switch on.

Remedy

(3) Open the cable tie (A).

(4) Unplug ST2 (B).

(5) Remove the Current Sensor Board PCB2 from the holder.

(6) Unthread the cable from the current sensor.

(7) Thread the cable 3 times through the current sensor from below.
= 2 full windings.

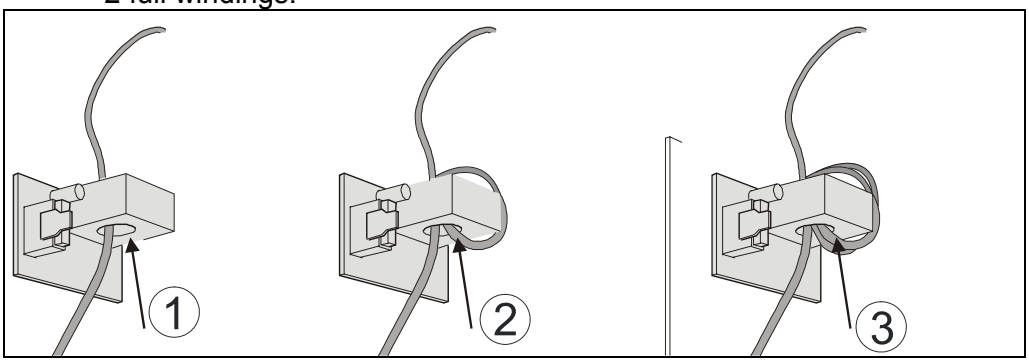

Figure 4

The cable must pass 3 times through the current sensor!

If the cable is threaded **from above** through the current sensor, it can only pass the sensor twice because of its length, which are 1.5 windings.
(see Figure 5) .

This results in wrong current values during TEACH IN and function monitoring.

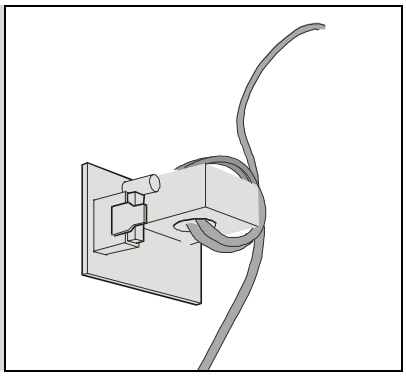

Figure 5

(8) Insert current sensor PCB2 in the holder.

(9) Plug in ST2 (B).

(10) Screw the cable to the cable terminal (A).

(11) Mount the covers and panels again.

(12) Connect the machine to the mains and switch on.

(13) Execute the <TEACH IN> procedure (see Chapter 6.2 of the documentation).

Document No.: DD+DIS009.07E

Classic E.O.S.
Type 5270 / 100
as of SN 4500

Classic E.O.S. CL
Type 5270 / 105
as of SN 1138

Manufacturer's Warning about Ground Fault Interrupters with Possibly Higher Trigger Current.

Task

Importance		Category		Scope	
◉	**Next Service**	◉	**Required** To be applied at all sites corrective preventive action or commercial goodwill	☑	Cure for PowerHelp Complaint: HQ_0612080003.
		○	**Selective** To be applied on affected sites corrective preventive action or commercial goodwill	☐	Problem affects serial number(s) / batch(es) listed below
○	**Recommended**	○	**Optional** Improves functionality of product	☑	Problem affects all sites

Reporting

After completion of your task the following entry in your Service Report is required: **DD+DIS009.07E** *

* Insert the document number into the field "Comment" (SMS form)

Purpose of the Document:

- It describes how to check the GFI switch.

- For a complete overview of Service Bulletins refer to the Order List in MedNet.

CONFIDENTIALITY NOTE:
Use, dissemination, distribution or reproduction of this bulletin by unauthorized personnel is not permitted and may be unlawful.
DOCUMENT CONTROL NOTE:
The controlled version of this document resides on MedNet. Any printed copy of this document is uncontrolled.

Copyright © 2006 Agfa-Gevaert HealthCare

1 Introduction

Subject

A manufacturer's warning has been issued regarding a batch of ground fault interrupters (GFI) with possibly higher trigger current.
Affected components have also been installed in Classic E.O.S. equipment.

Affected machines

The GFI switches were manufactured between January 2003 and May 2005 and have been installed in the following series:

- Classic E.O.S. Type 5270 / 100: SN 4500 - 5818
- Classic E.O.S. Type 5270 / 105: SN 1138 - 1142

Please note: as of 2003 GFI switches of the affected batch were also delivered as spare parts, so **all** machines can be affected.

Testing the GFI

Operator protection on the Classic E.O.S. is still guaranteed – even without the GFI – since the machine is completely encapsulated for operator protection.

The GFI is exclusively used for machine protection. As long as the GFI reacts during the test this protection is still in effect.

The GFI switch must only be replaced if it fails to react during the functional test.

2 Prerequisites

SPARE PARTS:

GFI switch Order number: CM+9 0452 3171 0

3 Checking the Function of the GFI Switch

REQUIRED TIME:
approx. 5 minutes

Press the test button (1).

a) GFI switch reacts
(toggle switch (2) tilts to “0”).
<u>The switch function is correct.</u>
Activate the GFI switch by flipping the toggle switch (2) back.

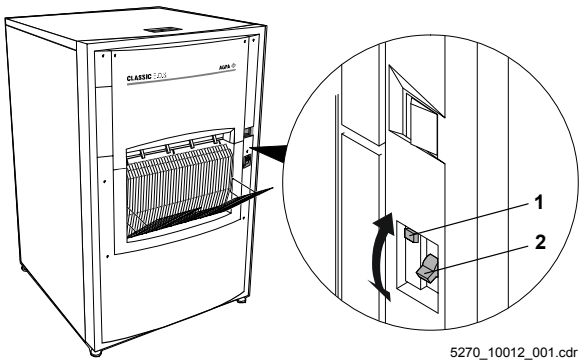

b) The GFI switch **fails** to react.
<u>The switch is defective.</u>
Replace the defective GFI switch.

NOTE:
Inform the customer that the function of the GFI switch must be checked 1x per month, as described in the User Manual.

Agfa Company Confidential

Document No.: DD+DIS223.07E

Classic E.O.S.
5270/100
as of SN 4500

Classic E.O.S. CL
5270/105
as of SN 1138

This Bulletin is for Information Only

Empty Battery of the Clock Chip Causes Incorrect Date and Incorrect Time Display Followed by a Calibration Request

Measure

Urgency	Ranking
Next service	◉ **Applying to all devices**
	○ Applying to the devices listed below
	○ Optional, to improve the product function

This document describes:

- Compatibility and obvious differences of control boards and clock chips.
- Replacement of clock chips and/or batteries.

CONFIDENTIALITY NOTE:
Use, dissemination, distribution or reproduction of this bulletin by unauthorized personnel is not permitted and may be unlawful.
DOCUMENT CONTROL NOTE:
The controlled version of this document resides on MedNet. Any printed copy of this document is uncontrolled.

Copyright © 2007 Agfa HealthCare N.V.

LIST OF CONTENTS

1 Introduction 3
1.1 Differentiation Criteria for Control Boards and Clock Chips 3
2 Prerequisites 4
3 Remedy 5
3.1 Replacing the Clock Chip and/or Battery 5
3.1.1 Type 5270 / 100 as of SFN 4500 up to SN 6106 (Control Board I or II) and/or Type 5270 / 105 as of SN 1138 up to SN 1142 (Control Board I or II): Replace the Clock Chip or Battery 6
3.1.2 Type 5270 / 100 as of SN 6107 (Control Board II) and/or Type 5270 / 105 as of SN 1143 (Control Board II): Replace the Battery 7
3.2 Daten neu setzen 8
3.2.1 Calibrating the Replenishment Rate 8
3.2.2 Setting Date and Time 13
3.3 Disposing of the Battery and/or the Clock Chip 14
4 Checking the Remedy 14
4.1 Getting the Machine Ready for Operation 14
5 Appendix – Overview of Differentiation and Compatibility Criteria of Control Boards and Clock Chips 15

1 Introduction

Symptom 1 The machine requests calibration of the replenishment rates after switching on.

Symptom 2 Incorrect date and incorrect time are displayed.

Error The battery in the clock chip is empty. The clock chip fails to save data when the machine switches off.

All data of the temporary infocounters is lost or displayed incorrectly when the machine is switched on again:

- Status, if calibration of the replenishment rates has been carried out
- Values of the replenishment rate calibration
- Processed film
- Expiration date of the maintenance interval
- Operating hours
- Management of the Error Hit List

Remedy Depending on the installed control board, either the clock chip or the Lithium battery of the clock chip must be replaced.

1.1 Differentiation Criteria for Control Boards and Clock Chips

New control boards CM+9 5270 9450 **3** (Label F8.5270.7890.4) with modified clock chips are available:
The clock chip on these control boards is soldered to the board and the Lithium battery is plugged into the clock chip. **The empty battery must be replaced.**

On previously installed control boards **the clock chip including battery must be replaced.**

NOTE:
The new control board was introduced to ensure compliance of the machines with RoHS regulations (Restriction of Certain Hazardous Substances).
There are no changes regarding the functions of the control board.

Agfa Company Confidential

2 Prerequisites

NOTE:
For an overview of the Control Boards I - II refer to the Appendix.

SPARE PARTS:
Order spare parts depending on the installed control board:

- Clock chip Order number CM+9 0441 7030 0 **for Control Board I**

or

- Lithium battery Order number CM+9 0486 2012 0 **for Control Board II**

TOOLS:

- Small screwdriver
- Small Phillips screwdriver
- Grounding strap CM+9 9999 0830 0
- Graduated beaker (at least 1000 ml)

3 Remedy

REQUIRED TIME:

Replacing the clock chip/battery	approx. 15 min each
Calibrating the replenisher pumps and setting the time	approx. 30 min

3.1 Replacing the Clock Chip and/or Battery

(1) Switch off machine and disconnect from mains.

(2) Remove top cover and side panels on the right.

NOTE:
Sections 3.1.1 ... 3.1.2 describe the replacement of the clock chip as well as the replacement of the battery, always depending on the respective SN range.
For an overview of the Control Boards I - II refer to the Appendix.

Agfa Company Confidential

3.1.1 Type 5270 / 100 as of SFN 4500 up to SN 6106 (Control Board I or II) and/or Type 5270 / 105 as of SN 1138 up to SN 1142 (Control Board I or II): Replace the Clock Chip or Battery

NOTE:
Depending on the control board only one of the actions is required.
Control Board I has been installed ex-factory (→ action “clock chip replacement”).
If the control board was replaced during repair, Control Board II has been installed (→ action “battery replacement”).

Either replace the clock chip (Control Board I):

(3) Carefully pull the clock chip out of its socket using a small screwdriver. See Figure 1.

(4) Insert the new clock chip in the correct position according to the socket notch (1). Carefully place the pins on the socket and do not distort the chip when pressing it down!

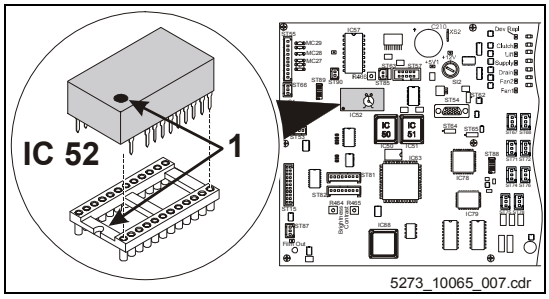

Figure 1: Replacing the clock chip

IMPORTANT:
Incorrect installation may result in damage of the newly installed clock chip.

Or replace the battery (Control Board II):

(3) Pull the battery straight up to remove it, see Figure 3: Replacing the battery.

(4) Insert the new battery in the correct position according to socket notch (1). Do not distort the battery when pressing it down!

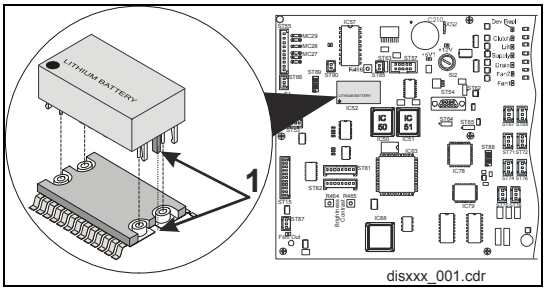

Figure 2: Replacing the battery

(5) Connect the machine to power.

3.1.2 Type 5270 / 100 as of SN 6107 (Control Board II) and/or Type 5270 / 105 as of SN 1143 (Control Board II): Replace the Battery

(3) Pull the battery straight up to remove it, see Figure 3: Replacing the battery.

(4) Insert the new battery in the correct position according to socket notch (1). Do not distort the battery when pressing it down!

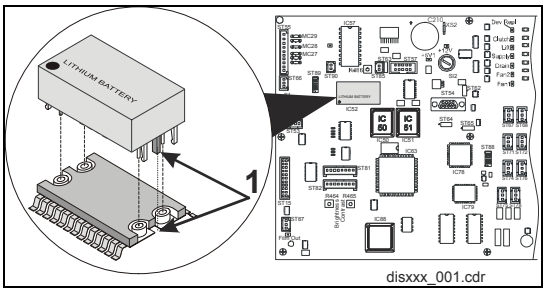

Figure 3: Replacing the battery

(5) Connect the machine to power.

3.2 Setting the Data

The following setup must be carried out for all machines:

(1) Calibrate the developer and fixer pumps.

(2) Set the clock again.

Description	See chapter
Calibrating Rate	3.2.1
Setting	3.2.2

3.2.1 Calibrating the Replenishment Rate

Preparations:

(1) Press both arrow keys and hold them until the machine switches on. This resets all infocounters to zero (second operator required).

(2) Remove the left hand side panel.

(3) Pull out the replenisher supply pipes of developer or fixer, respectively.

(4) Hold the end of the supply pipe in a graduated beaker (minimum capacity: 1000 ml).

→ Start the calibration:

1	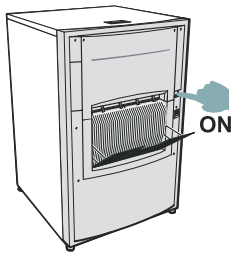 **Cal Dev and Fix go to Test / Adjust**
2	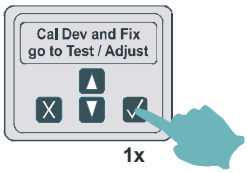 ⇒ Settings / Language / Auto filling / Service ⇒ **Service**
3	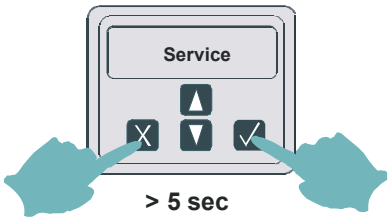 ⇒ InfoCounters / Test & Adjust ⇒ **Test & Adjust**
4	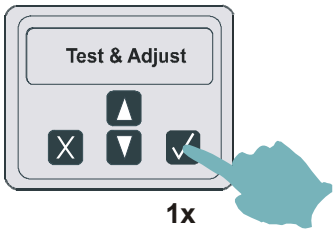 ⇒ Device ErrTest / Autotest / Test Input / Test Output / DEV Pump CAL / FIX Pump CAL ⇒ **DEV Pump CAL**

Agfa Company Confidential

→ Calibrate the developer pump:

5	

NOTE:

Start the "Air Bleeding" with the ▲ key until no more bubbles are visible in the developer supply hose! The removed chemicals can be poured back into the respective machine tanks.

6	
7	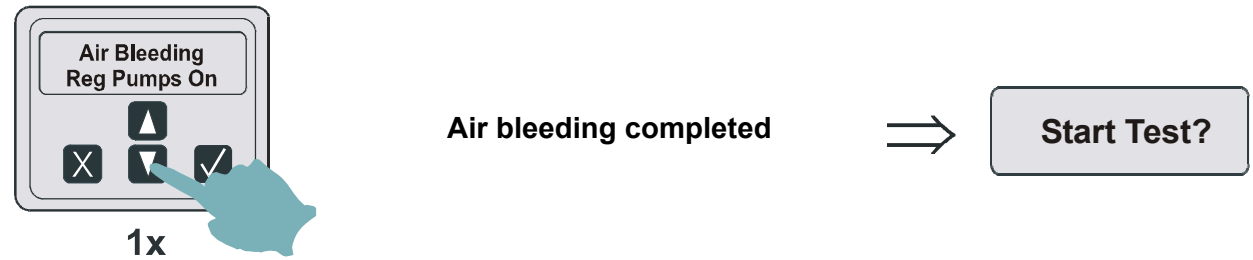
8	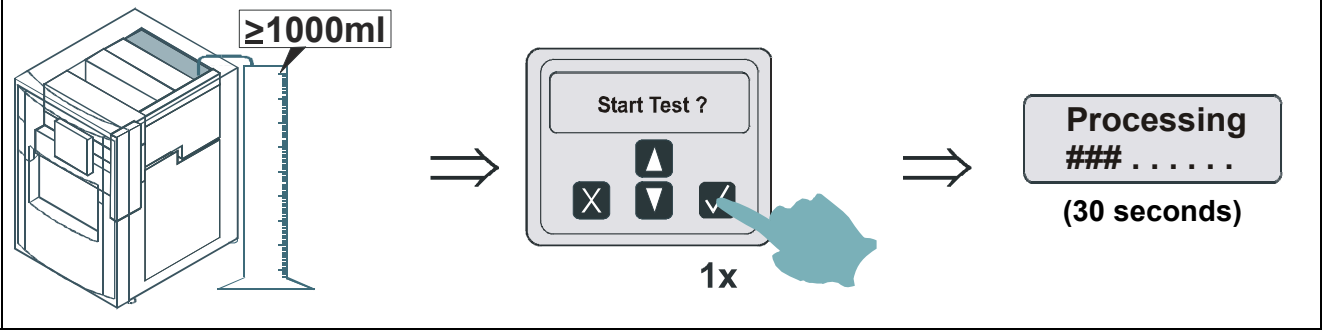

9	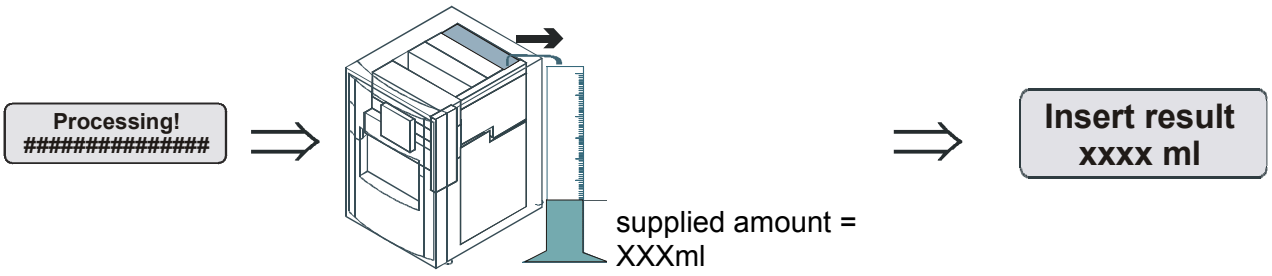
10	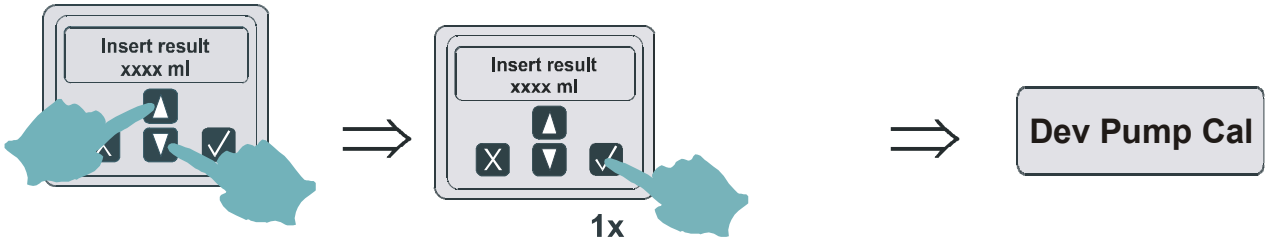 in steps of 5 ml

→ Calibrate the fixer pump:

11	
12	

NOTE:

Activate the "Air Bleeding" with the ▲ key until no more bubbles are visible in the supply hose for the developer! The removed chemicals can be poured back into the respective machine tanks.

Agfa Company Confidential

13	
14	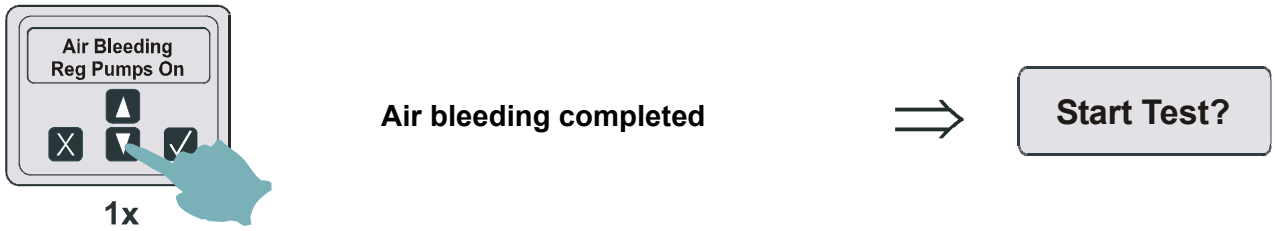
15	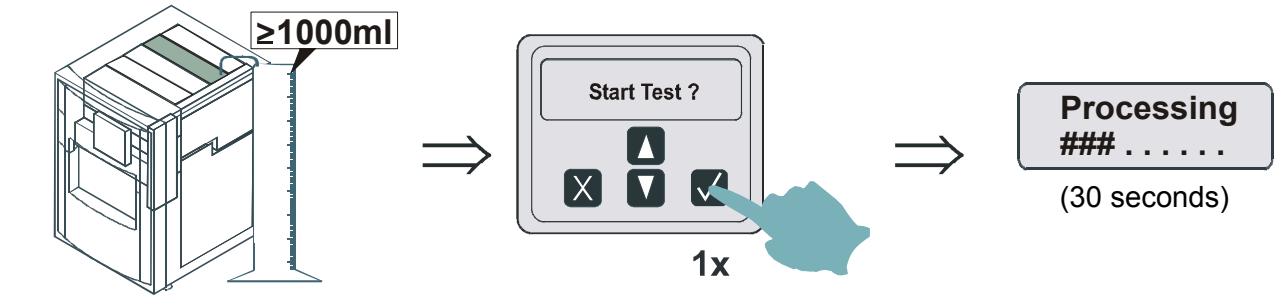
16	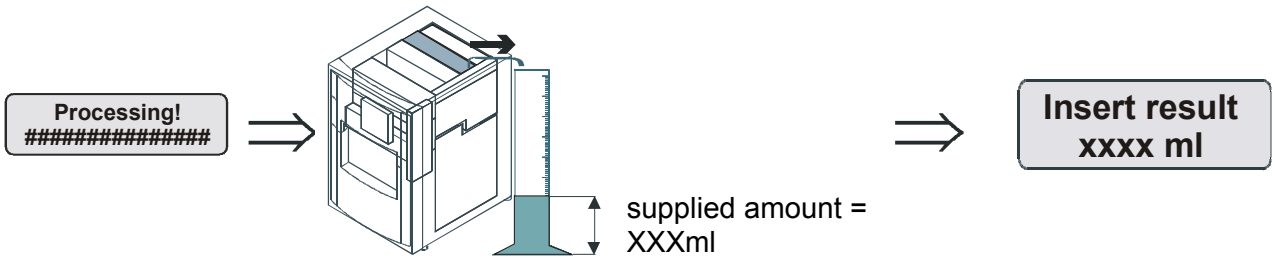
17	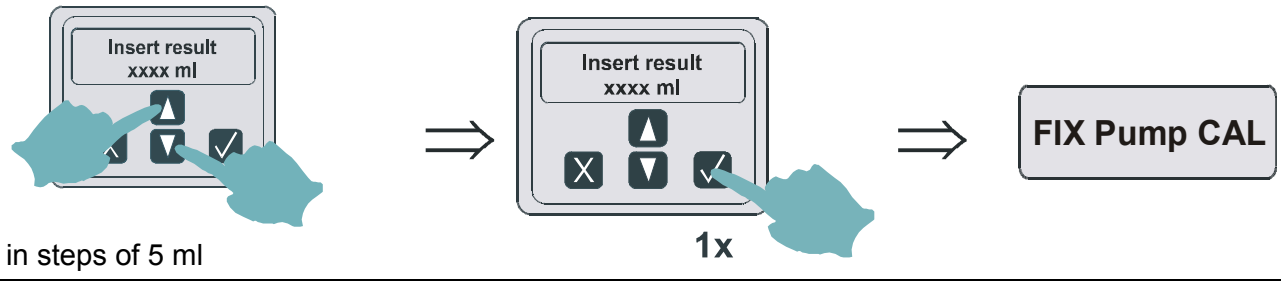
18	

3.2.2 Setting Date and Time

(1) Access the SERVICE program by pressing the keys ✕ and ✓ simultaneously and holding them (5sec).

(2) Call up the menu option **<Set Date/Time>**:

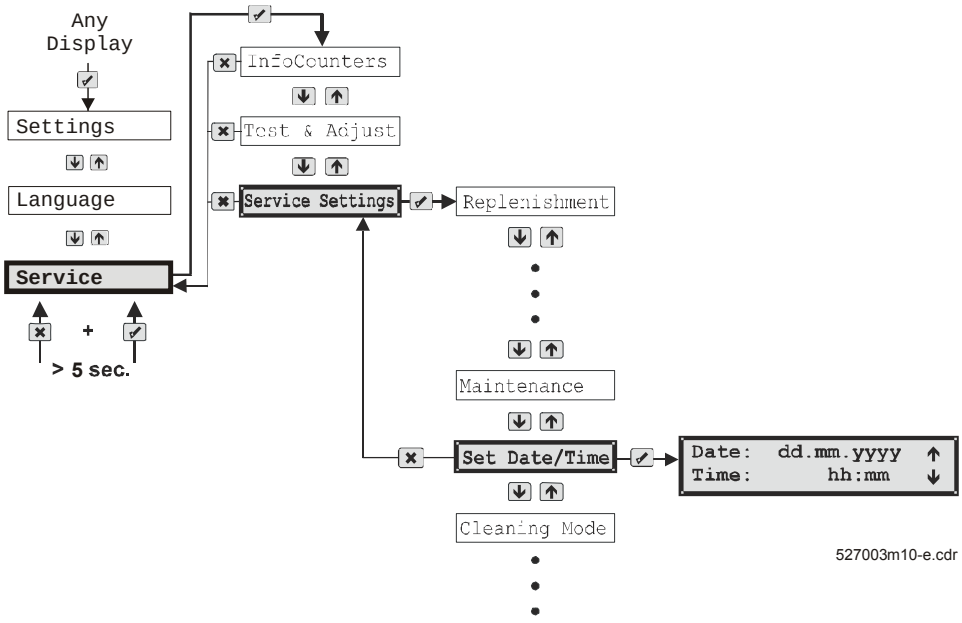

(3) Set date and time:

NOTE:

✕ - Press this key to cancel a setting.

Action	Keys	Result
Select **<Set Date/Time>**	✓	**Date: dd.mm.yyyy** **Time: hh:mm**
Set the date	↓ ↑	**Date: dd.mm.yyyy**
Confirm the set date	✓	
Set the time	↓ ↑	**Time: hh:mm**
Confirm the set time	✓	

Date: **dd** = day **mm** = month **yyyy** = year

Time: **hh** = hours **mm** = minutes

Agfa Company Confidential

3.3 Disposing of the Battery and/or the Clock Chip

(1) Dispose of the used clock chip and/or the battery in compliance with the disposal regulations by local authorities!

4 Checking the Remedy

(1) Check the function. To do so switch the machine off and on again.

Result Correct date and time are displayed (→ clock chip saves data). The machine no longer requests calibration.

After replacement of the Lithium battery:
If the machine still request calibration, or display of date and time is still incorrect, the clock chip itself is defective and the control board must be replaced.

4.1 Getting the Machine Ready for Operation

(1) Mount all covers and panels.

5 Appendix – Overview of Differentiation and Compatibility Criteria of Control Boards and Clock Chips

Control Board I	Type 5270/100 as of SN 4500 - 6106 ex factory Type 5270/105 as of SN 1138 - 1142 ex factory	Control Board: CM+9 5270 9450_ Label: F8.5270.7890._

Black clock chip
Order number: CM+9 0441 7030 0

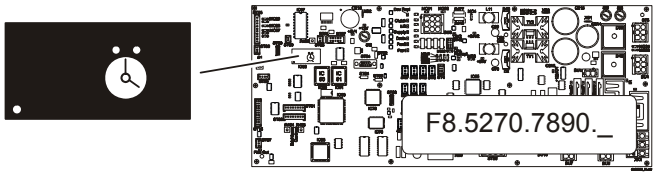

Clock chip is **not** downward compatible

Control Board II is downward compatible

Control Board II	Type 5270/100 as of SN 6107 ex factory Type 5270/105 as of SN 1143 ex factory	Control Board: CM+9 5270 9450 x (x = 3) Label: F8.5270.7890.x (x = 4)

Clock chip with
yellow Lithium battery
Order number battery: CM+9 0485 2012 0

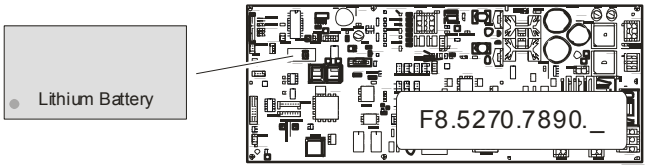

Agfa Company Confidential

Site Planning

14

Section 14

contains all planning data including the required measures to be carried out on site before the machine is delivered.

The section is divided into

- Construction planning data
- Technical connection and performance data
- Safety instructions

HEALTHCARE
Sales & Services >
Global Services Organisation

Installation Planning

Order No.: DD+DIS303.03E
1 piece WACPK MA 1

Classic E.O.S.
Type 5270/100

Classic E.O.S. CL
Type 5270/105

INSTALLATION PLANNING and Technical Data

Internal Update #5

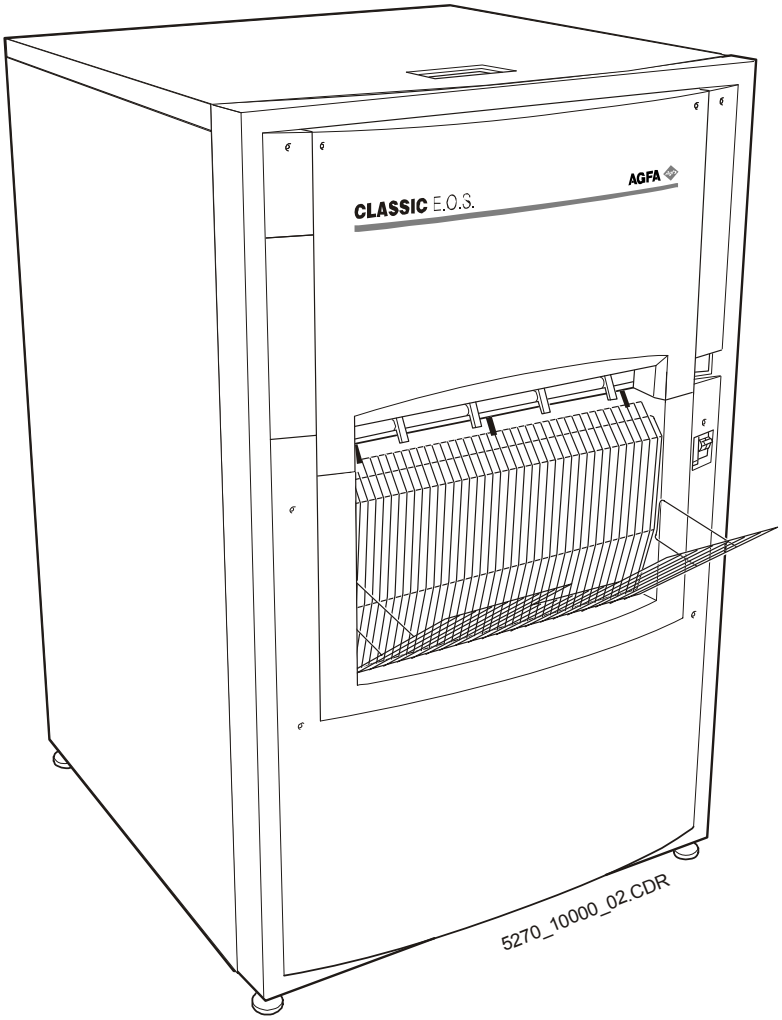

The Installation Planning Instructions can also be ordered separately.
Order number: DD+DIS303.03E

printed in Germany 03 / 2004

AGFA

Caution:

This system uses mains voltage. Please observe the pertinent safety instructions.

These instructions describe adjustments and routines,
which must only be performed by qualified technical personnel.

Note:

Electrical repairs and connections must only be made by certified electricians.

Mechanical repairs and connections must only be made by certified technicians.

CE Declaration:

According to the medical directives the CE Declaration
(CE Conformity) becomes void if the product is modified without permission of the manufacturer!
This applies to all parts, not only the safety devices!

We reserve the right to change data and characteristics in the light of technical progress.

Chapter 14

Contents

1 Safety 1

2 Scope of Delivery and Accessories 3

2.1 Classic E.O.S. Type 5270/100 3

2.2 Classic E.O.S. CL Type 5270/105 3

2.3 Peripheral equipment 4

2.4 Exhaust connection through the floor 4

3 System Overview 5

3.1 Classic E.O.S. Type 5270/100 5

3.2 Classic E.O.S. CL Type 5270/105 6

4 Machine Dimensions 7

4.1 Classic E.O.S. Type 5270/100 7

4.2 Classic E.O.S. CL Type 5270/105 8

5 Transport path 9

6 Access for Repair and Maintenance 10

6.1 Classic E.O.S. Type 5270/100 10

6.2 Classic E.O.S. CL Type 5270/105 11

7 Daylight / Darkroom Installation (only Classic E.O.S. Type 5270/100) 12

7.1 Machine in the daylight, film feed in the darkroom, light seal at the darkroom feed table 12

7.1.1 Installation at the wall opening 12

7.1.2 Installation with light tight wall 13

7.2 Machine in the darkroom, film exit in the daylight, light seal at the dryer with light tight wall 14

7.2.1 Installation at the wall opening with light tight wall 14

7.3 Light tight wall 15

8 Installation 16

8.1 Hoses and installation material 16

8.2 Supply and disposal through the lower front panel (only Classic E.O.S. Type 5270/100) 17
8.2.1 Instructions for breaking out the openings 17
8.2.2 Required openings for standard installations 17
8.2.3 Installing the developer / fixer supply hoses 18
8.2.4 Installing the disposal hoses 19
8.3 Supply and disposal through the floor 20
8.3.1 Installing the disposal hoses 21
8.4 Replenisher tanks for developer and fixer 22
8.5 Disposal tanks 23
8.6 Water connection 24
8.6.1 Wall / machine connection at a water pressure of 2 – 6 bar 25
8.6.2 Wall / machine connection at a water pressure > 6 bar 26
8.6.3 Overview of adaptation parts for water installations: 27
8.7 Exhaust connection 29
8.7.1 Exhaust connection through lower front panel (only Type 5270/100) 29
8.7.2 Exhaust connection through the floor 30
8.8 Electrical connection of the machine 31
9 Technical Data 33
9.1 Electrical data 33
9.2 Ambient and climatic conditions 33
9.3 Transport and storage conditions 34
10 Machine Specifications 35
10.1 Type overview 35
10.2 Film types 35
10.3 Film formats 35
10.4 Functional data 36
11 Dimensions and Weights 37
11.1 Classic E.O.S. Type 5270/100 37
11.2 Classic E.O.S. CL Type 5270/105 37
12 Machine Standards and Directives 38
12.1 Safety 38
12.2 Radio interference suppression 38
12.3 Electromagnetic compatibility 38
12.4 Certificates and guidelines 39
13 Checklist for Installation Planning 41

1 Safety

General safety instructions

- The machine must only be used as described in the operating instructions. Any other use may result in damage to the machine or may affect the machine function with the consequence that the machine can no longer be used as intended, and therefore presents a risk for patients, user, and environment.
- The machine must only be operated by qualified personnel trained on the machine.
- Ensure that only trained personnel have access to the machine.
- Ensure that the machine can always be supervised and that any tampering is prevented.
- Repairs or modifications on the machine must only be performed by trained service personnel authorized by Agfa.
- In case of visible damage on the machine housing the machine must not be operated or used, and must immediately be disconnected from the mains.
- Built-in or external safety devices must not be circumvented or disabled.
- Disconnect the machine from the mains before starting any maintenance.
- If a mains connection is absolutely required these maintenance routines must only be made by specially trained personnel.
- Like all technical devices, this machine must be operated, cared for and serviced correctly as described in the documentation provided with the machine.
- If the machine is not operated correctly, or if it is not serviced correctly, Agfa will not be liable for any resulting disturbances, damage or injuries.
- When installing the machine make sure that either the mains plug or an all-cable disconnecting device is provided in the internal installation close to the machine and is easily accessible.
- If the machine is connected with other components or assemblies, Agfa will guarantee safety only for combinations which are approved by Agfa.
- In case of conspicuous smoke or noises, immediately disconnect the machine from the mains.

Special instructions for the handling of chemicals

- When handling chemicals, always observe the applying safety and environmental regulations, as well as the operating and warning instructions pertaining to these chemicals.
- Wear stipulated protective clothing and safety goggles.
- When disposing of chemicals and waste water, you must comply with the local regulations concerning waste water and environmental protection.
- If photo-chemicals get in your eyes, proceed exactly according to the warning instructions and/or the instructions published by the manufacturers of the chemicals. If required, immediately rinse your eyes with cold water. Afterwards see the doctor immediately.
- Avoid inhaling of chemical fumes. Make sure that there is sufficient ventilation at the installation site of the machine, i.e. an air exchange that is at least ten times the room volume per hour.
- Always comply with the installation instructions.
- Verify tightness of all connections for chemicals and water, as well as waste water, on the machine in regular intervals. At least check whenever suggested in the operating instructions and/or service instructions.

- If solution gets into the inside of the machine (e.g. by spilling during tank filling), the machine must immediately be disconnected from the mains and cleaned thoroughly by the service personnel.
- Do not use additional chlorine or chlorine containing substances inside the processor. The use of additional chlorine or chlorine containing substances can lead to irreversible damage of the equipment. Using these substances may void the manufacturers warranty.

The film processor must not be operated in the direct vicinity of the patients as defined in EN60601-1 and IEC 601-1.

Adherence to safety regulations

- This film processor meets the safety requirements as defined in EN 60950: 1997 (IEC 950) and EN 60601-1-2: 1993, UL 1950 and CSA C22.2 No. 950 and has interference suppression as defined in EN 50081-1, EN 55011, and FCC 47 Part 15, Subchapter B, Class A.
- The water connection is in compliance with DIN 1988 / EN 1717:2001.

2 Scope of Delivery and Accessories

2.1 Classic E.O.S. Type 5270/100

Machine	Type	Power connection	ABC Code
Classic E.O.S.	5270/100	1 N~ 230 V (200-240 V) 50/60 Hz	37XK3

Accessory box

- Wire chute
- Exhaust hose including joint to the connection stub
- Power cable UL NEMA 6-20 P
- Power cable VDE CEE 7 standard cover VII
- Sealing tape 12x12mm; 1.3m long; self-adhesive
- Pipe
- Label (wrap-around) DEV, FIX, WAT; OVERFLOW
- Installation kit
- Accessory box with small installation parts
- Accessory box with installation parts for the exhaust
- Technical documentation

2.2 Classic E.O.S. CL Type 5270/105

Machine	Type	Power connection	ABC Code
Classic E.O.S. CL	5270/105	1 N~ 230 V (200-240 V) 50/60 Hz	EFPHK

Accessory box

- Wire chute
- Exhaust hose including joint to the connection stub
- Power cable UL NEMA 6-20 P
- Power cable VDE CEE 7 standard cover VII
- Sealing tape 12x12mm; 1.3m long; self-adhesive
- Pipe
- Label (wrap-around) DEV, FIX, WAT; OVERFLOW
- Installation kit
- Accessory box with small installation parts
- Accessory box with installation parts for the exhaust
- Technical documentation

2.3 Peripheral equipment

Mixer	Type 5280
Mixer communication cable (Mixer to film processor)	CM+9528030301
Replenisher tanks (2 x 30 liters) with level sensor / cable 5 m	Type 8186 / 701 ABC Code: FJ1QL
Replenisher tanks (2 x 80 liters) with level sensor / cable 6 m	Type 8186 / 101 ABC Code: F98XW

2.4 Exhaust connection through the floor

Order an additional exhaust stub Ø 100 mm, CM+9522030091

3 System Overview

3.1 Classic E.O.S. Type 5270/100

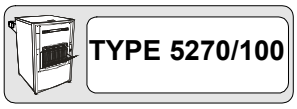

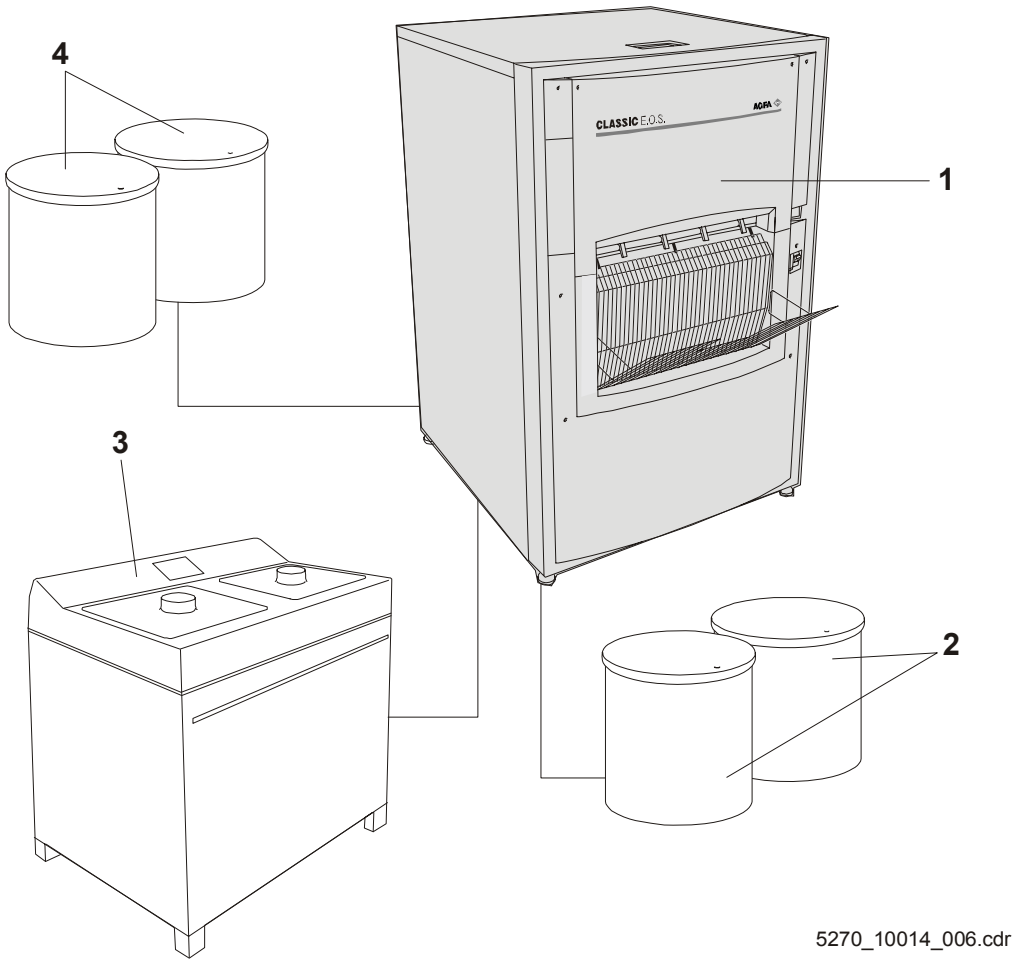

Figure 1

The system requires the following components which must be considered in the planning:

1	Film processor Classic E.O.S. 5270/100
2	Disposal tanks or connection to a centralized disposal system
3	Chemical solution mixer
4	Replenisher tanks for developer and fixer instead of mixer
--	Water connection via water filter (not shown)

Depending on the customer's wishes, the film processor can be combined with the following additional equipment.
According to the required configuration further installation planning for corresponding equipment (e.g. mixer) must be taken into consideration.

3.2 Classic E.O.S. CL Type 5270/105

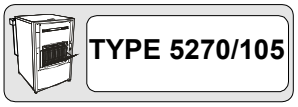

The system requires the following components which must be considered in the planning:

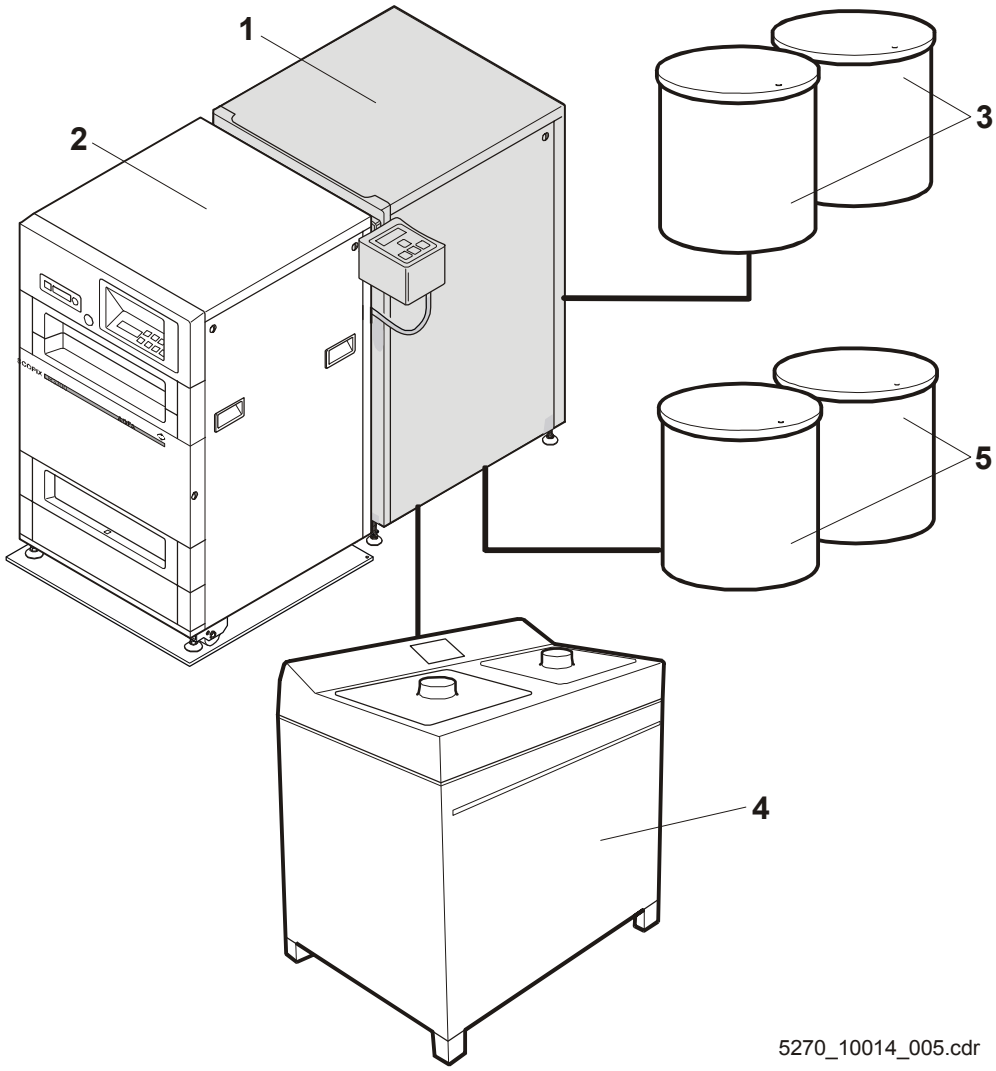

Figure 2

1 Film processor Classic E.O.S. CL 5270/105
2 Laser Imager LR3300
3 Disposal tanks or connection to a centralized disposal system
4 Chemical solution mixer
5 Replenisher tanks for developer and fixer instead of mixer
-- Water connection via water filter (not shown)

Depending on the customer's wishes, the film processor can be combined with the following additional equipment.
According to the required configuration further installation planning for corresponding equipment (e.g. mixer) must be taken into consideration.

4 Machine Dimensions

4.1 Classic E.O.S. Type 5270/100

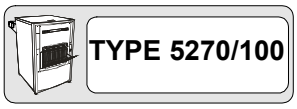

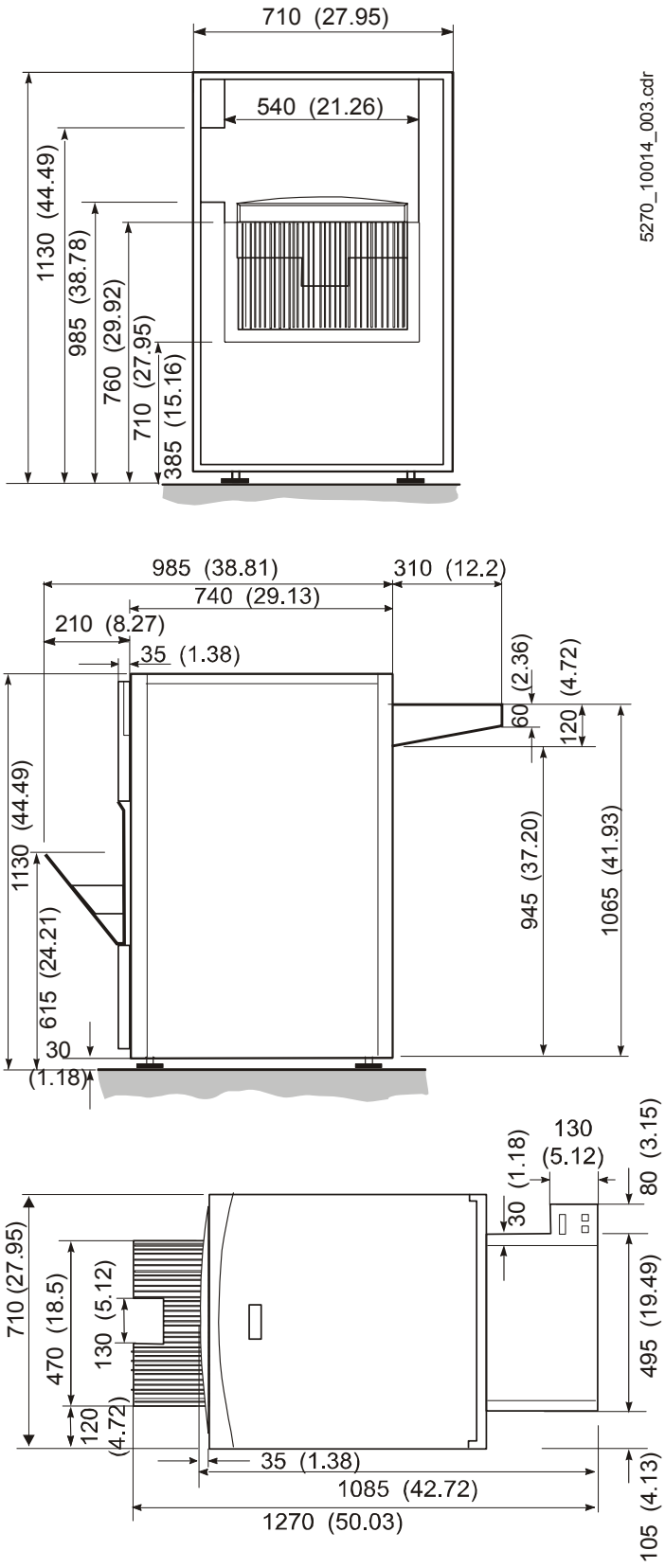

Figure 3

Dimensions in mm (inch)

4.2 Classic E.O.S. CL Type 5270/105

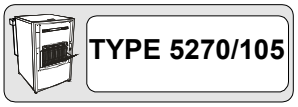

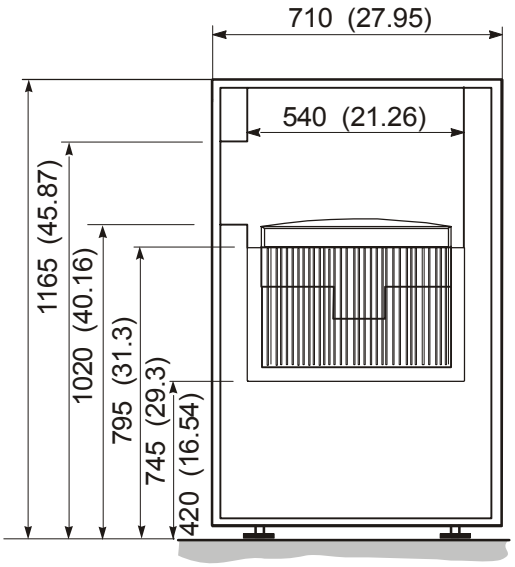

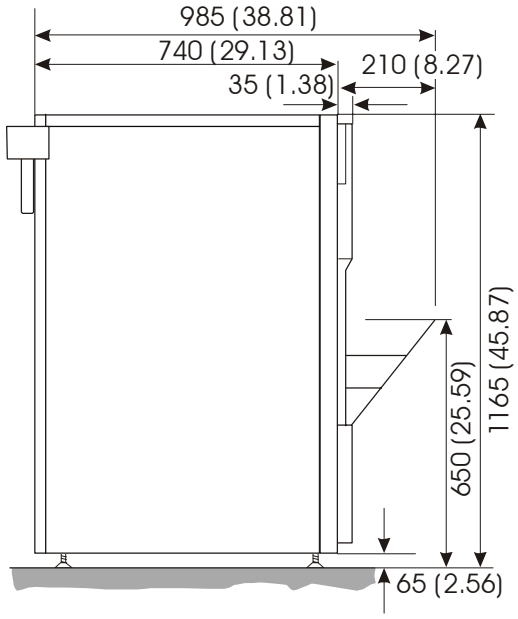

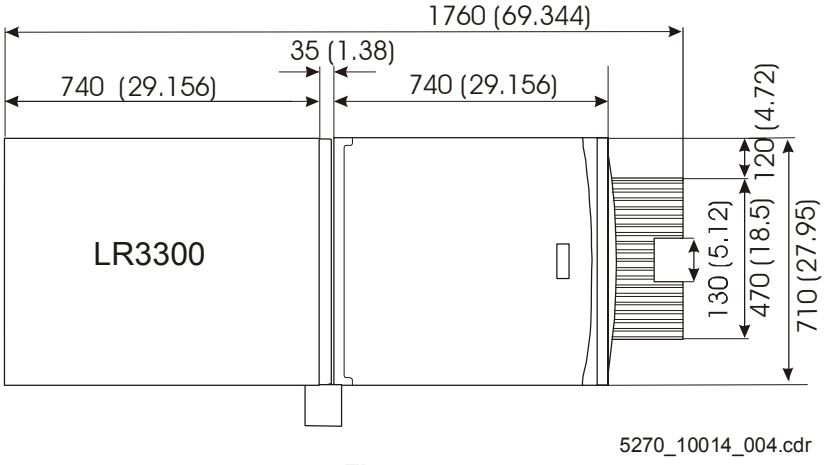

Figure 4

Dimensions in mm (inch)

5 Transport path

The film processor must fit through all doors and hallways on its transport path to the installation site.

Classic E.O.S. / Classic E.O.S. CL (Type 5270/100/105)	**Smallest door width**
without pallet	**at least 73 cm (29 inch)**
with pallet	**at least 82 cm (32 inch)**

6 Access for Repair and Maintenance

6.1 Classic E.O.S. Type 5270/100

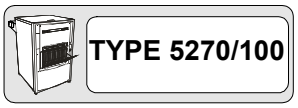

The required floor space for the film processor (with feed table, chute and the required clearance on the left) is 1270 x 860 mm (50.03 x 33.88 inch).

The free space indicated in the illustration must be guaranteed for repair and maintenance, otherwise the time required for service will increase.

Optimum dimensions:
We recommend to plan on this free space.

Minimum dimensions:
Do not go below this minimum space.

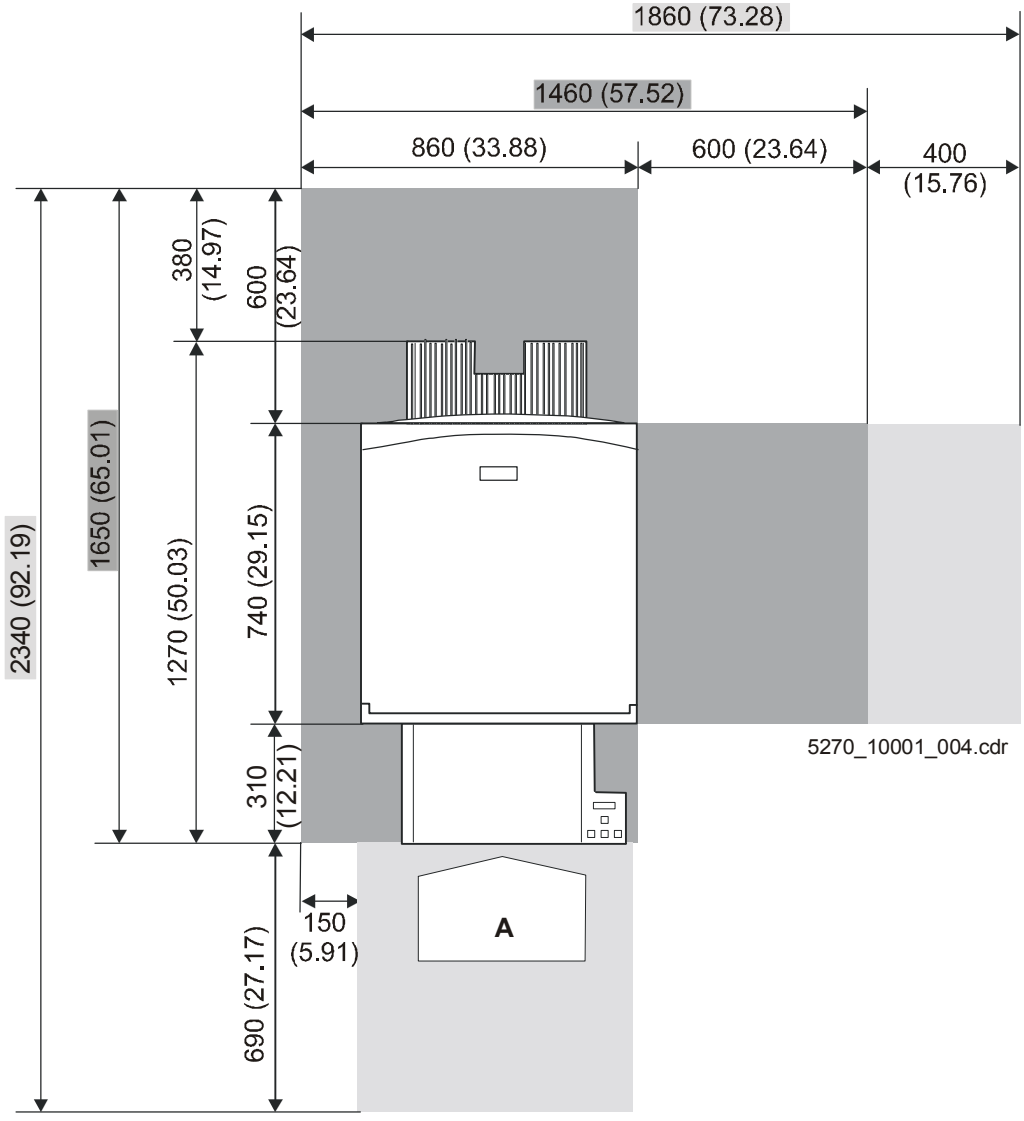

Figure 5

(A) Operation side
Dimensions in mm (inch)

6.2 Classic E.O.S. CL Type 5270/105

The required floor space for the film processor in combination with the Laser Imager LR3300, feed table, chute and the required clearance on the left is 1700 x 860 mm (66.98 x 33.88 inch).

In case of an installation of the Laser Imager LR3300 or another daylight system observe the installation documentation enclosed with the machine.

The free space indicated in the illustration must be guaranteed for repair and maintenance, otherwise the time required for service will increase.

Optimum dimensions:
We recommend to plan on this free space.

Minimum dimensions:
Do not go below this minimum space.

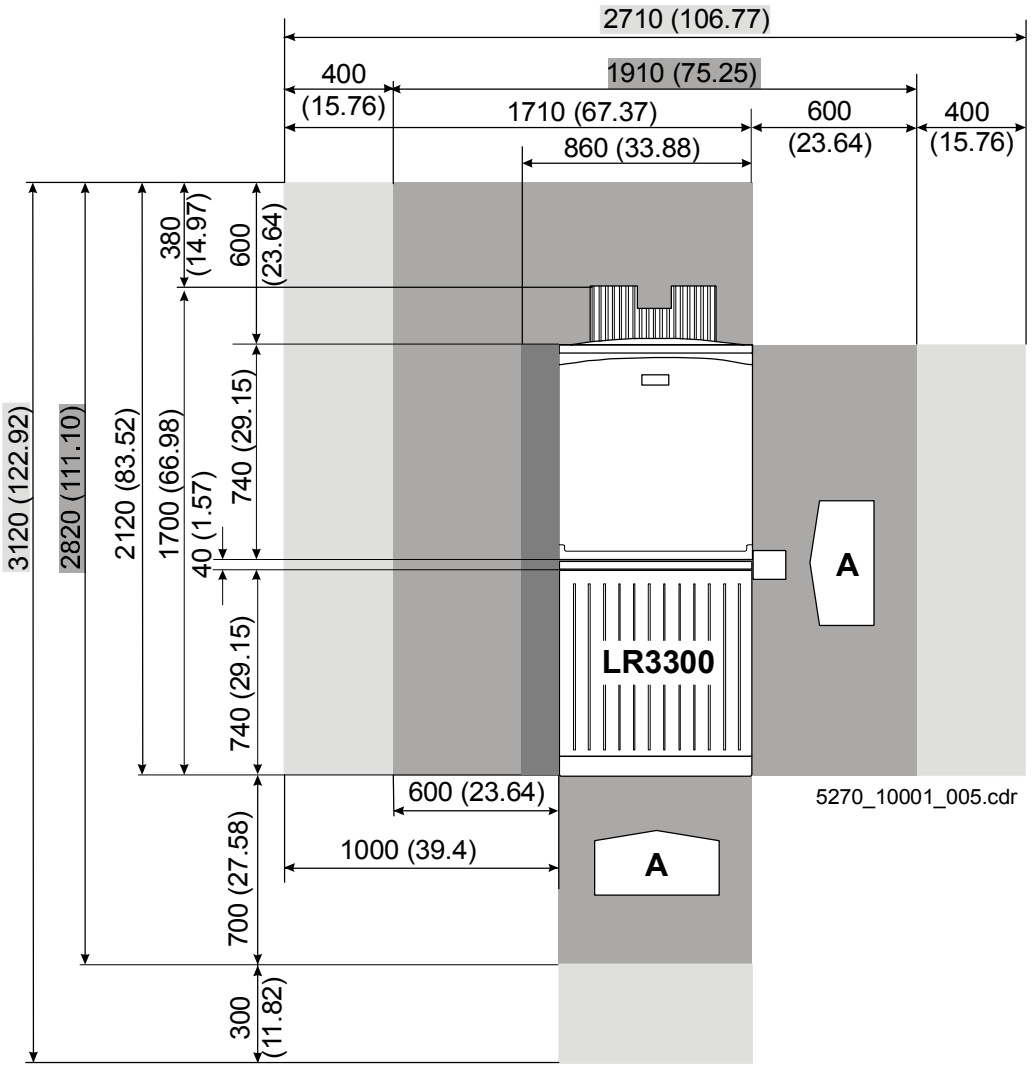

Figure 6

(A) Operation side
Dimensions in mm (inch)

7 Daylight / Darkroom Installation (only Classic E.O.S. Type 5270/100)

Chapter 7 “Daylight / Darkroom Installation” only refers to the Standalone Version Type 5270/100.
Type 5270/105 has been designed for installation as daylight system.

7.1 Machine in the daylight, film feed in the darkroom, light seal at the darkroom feed table

7.1.1 Installation at the wall opening

① Film feed
② Film output (wire chute)
③ A 60° chamfer must be provided on the wall opening.
④ Wall
⑤ Wall base
⑥ Light seal (foam rubber – by the meter) Order no. CM+0000014259

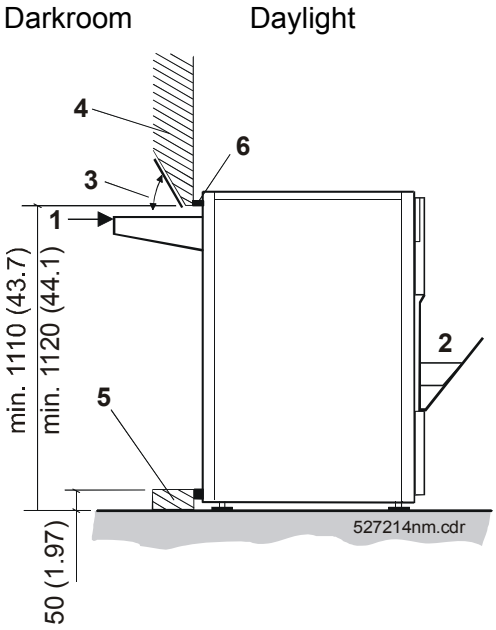

Figure 7

Dimensions in mm (inch)

Wall opening:

① Wall
② Wall base
③ Wall opening

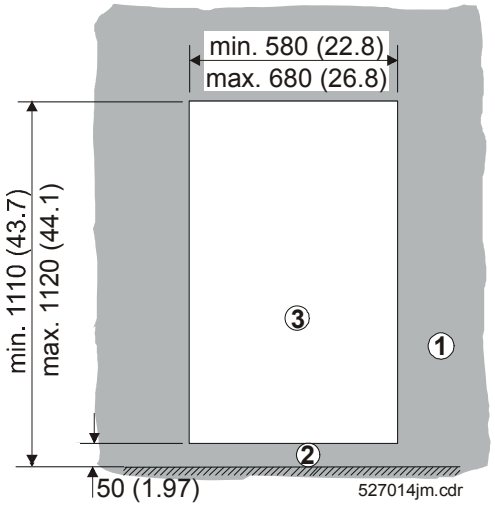

Figure 8

Dimensions in mm (inch)

7.1.2 Installation with light tight wall

① Film feed
② A 60° chamfer must be provided on the wall opening.
③ Wall
④ Light tight wall
⑤ Film output (wire chute)
⑥ Wall base
⑦ Light seal
(foam rubber – by the meter)
Order no. CM+0000014259

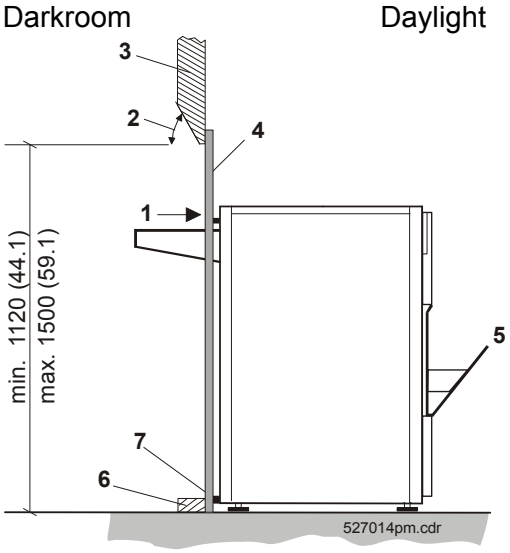

Figure 9

Dimensions in **mm (inch)**

Wall opening

① Wall

② Overlap wall / light tight wall at least 5 cm on all sides

③ Wooden board, 20 mm (0.79 inch) with opening

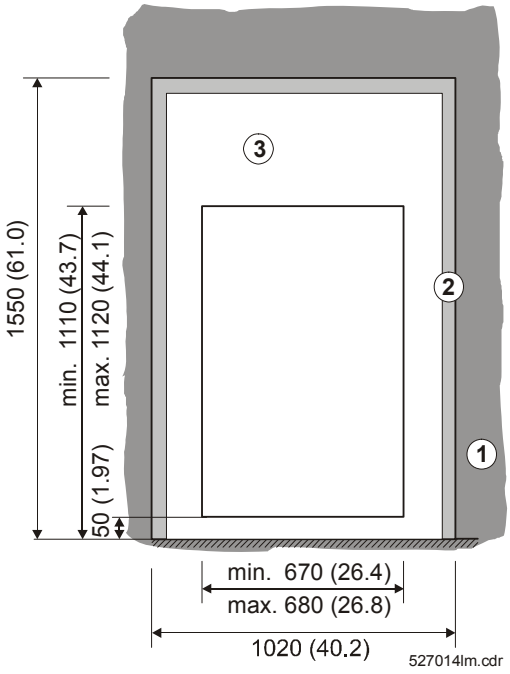

Figure 10

Dimensions in mm (inch)

See 7.3, Light tight wall

7.2 Machine in the darkroom, film exit in the daylight, light seal at the dryer with light tight wall

7.2.1 Installation at the wall opening with light tight wall

1 Film feed
2 Wall
3 A 60° chamfer must be provided on the wall opening.
4 Light tight wall
5 Film output (wire chute)
6 Light seal (foam rubber – by the meter) Order no. CM+0000014259
7 Wall base

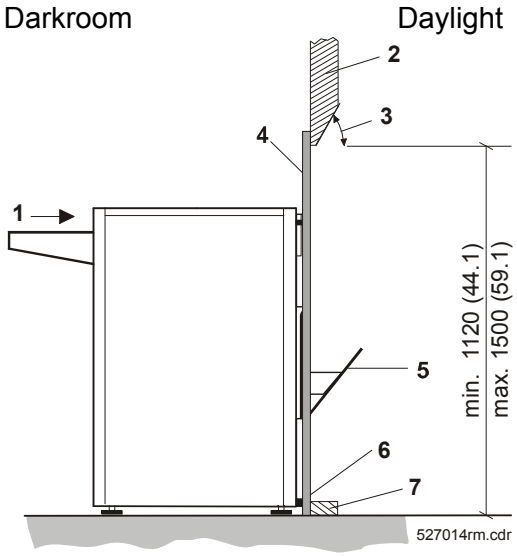

Figure 11

Dimensions in mm (inch)

The lower the height of the wall opening the more difficult will be the access to the film removal.

Wall opening

1 Wall
2 Overlap wall / light tight wall at least 50 mm (1.97 inch) on all sides
3 Wooden board, 20 mm (0.79 inch) with opening

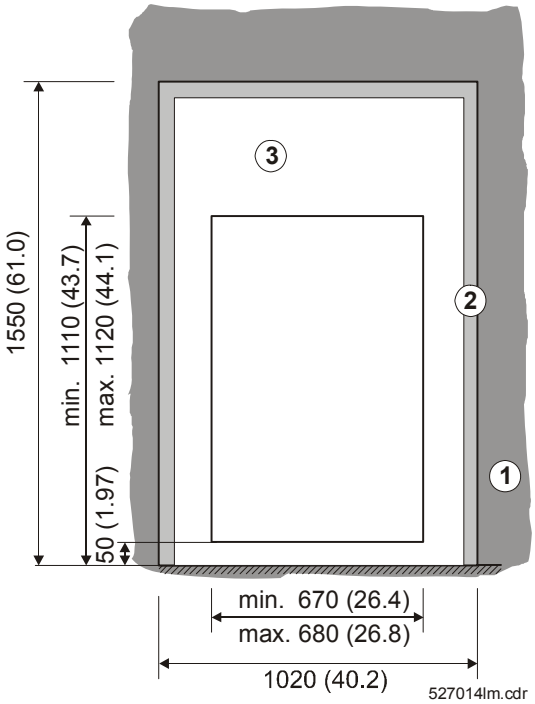

Figure 12

Dimensions in mm (inch)

See 7.3, Light tight wall

7.3 Light tight wall

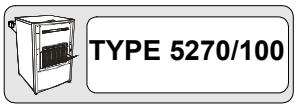

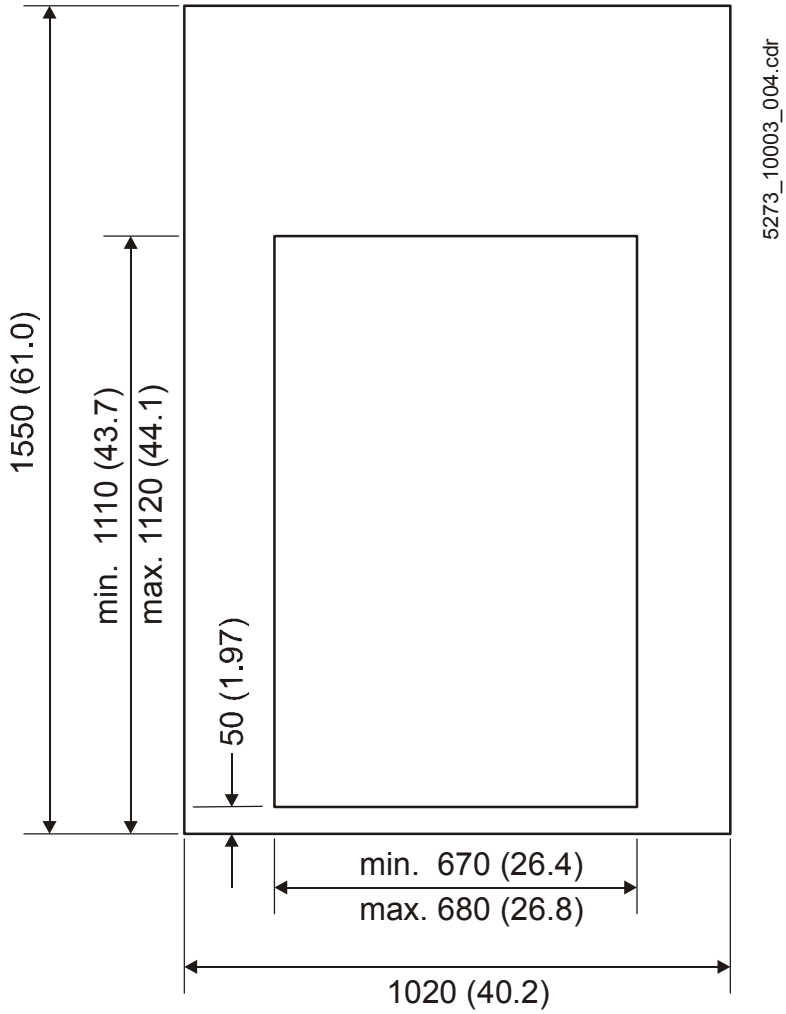

Figure 13

Dimensions in mm (inch)

Coverage of a wall opening of up to 1400 mm x 900 mm (55.16 inch x 35.46 inch) is possible.

An overlap of 50 mm (1.97 inch) must be guaranteed on all sides.

The manufacturer does not supply the light tight wall (wooden board) required for the installation of a film processor!

8 Installation

8.1 Hoses and installation material

Only use **fiber-reinforced** PVC hoses Ø 19x4 mm for the external hose connections (outside the machine)!

The supply and disposal hoses for developer, fixer, water, and safety overflow in the machine are marked by tapes:

DEV	= developer	**WAT**	= water
FIX	= fixer	**OVERFLOW**	= safety overflow

Tapes to be wrapped around external hoses are included in the accessory box.

The following hoses are to be used for the supply connections:

Supply connection	**Color**	**Dimensions (mm / inch)**	**Order number**
Developer	red (DEV)	10x3 / 0.39x0.12 fiber-reinforced	CM+0000064082
Fixer	blue (FIX)	10x3 / 0.39x0.12 fiber-reinforced	CM+0000064083

The following hoses are to be used for the disposal connections:

Disposal connection	**Color**	**Dimensions (mm / inch)**	**Order number**
Developer	red (DEV)	19x4 / 0.75x0.16 fiber-reinforced	CM+0000064133
Fixer	blue (FIX)	19x4 / 0.75x0.16 fiber-reinforced	CM+0000064134
Water safety overflow	transparent (WAT)	19x4 / 0.75x0.16 fiber-reinforced	CM+0000007620

The accessory box includes an approx. 50 cm (19.69 inch) long PAP hose **for the exhaust connection**.
The PAP hose (Ø 100 mm / Ø 3.94 inch) can be ordered by the meter:
Order number CM+0000064117

Hose clamp	Supply	CM+9037170090
Disposal		CM+9037200400
Exhaust		CM+7037196490
Hose connection	Supply	CM+9521075161
Disposal		CM+9521075041
Threaded bush		CM+9521075050
Y – connector		CM+9034200440
Exhaust connection ∅ 100 mm (3.93 inch) Order an additional joint for the floor connection!		CM+9522030091

8.2 Supply and disposal through the lower front panel (only Classic E.O.S. Type 5270/100)

8.2.1 Instructions for breaking out the openings

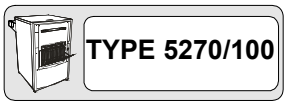

- It is **not** necessary to remove the front panel in order to break out the openings.
- Mark the recesses to be broken out with a felt-tip marker.
- The material can be broken out by holding a screwdriver against he groove and hitting it with a hammer.

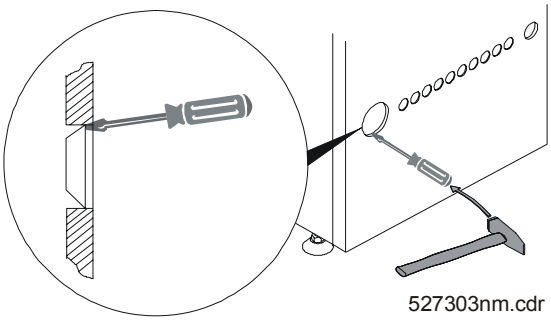

Figure 14

8.2.2 Required openings for standard installations

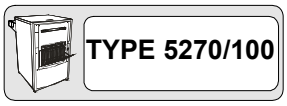

(A) Exhaust connection
(B) Developer overflow / drain
(C) Fixer overflow / drain 1
(D) Water overflow / drain
(E) Safety overflow, tanks
(F) Developer supply
(G) Fixer 2 supply
(H) Water supply

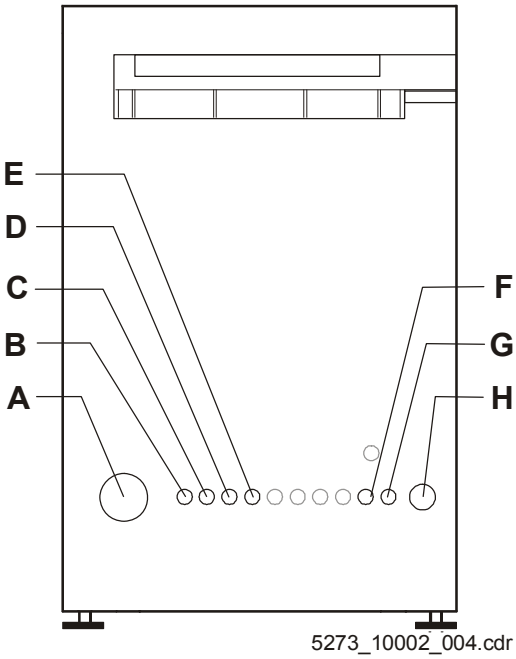

Figure 15

8.2.3 Installing the developer / fixer supply hoses

Only use **fiber-reinforced** PVC hoses Ø 10x3 mm (0.39x0.12 inch) for the external hose connections (outside the machine)!

Position the hoses **without kinks**!

Installing the developer / fixer supply:

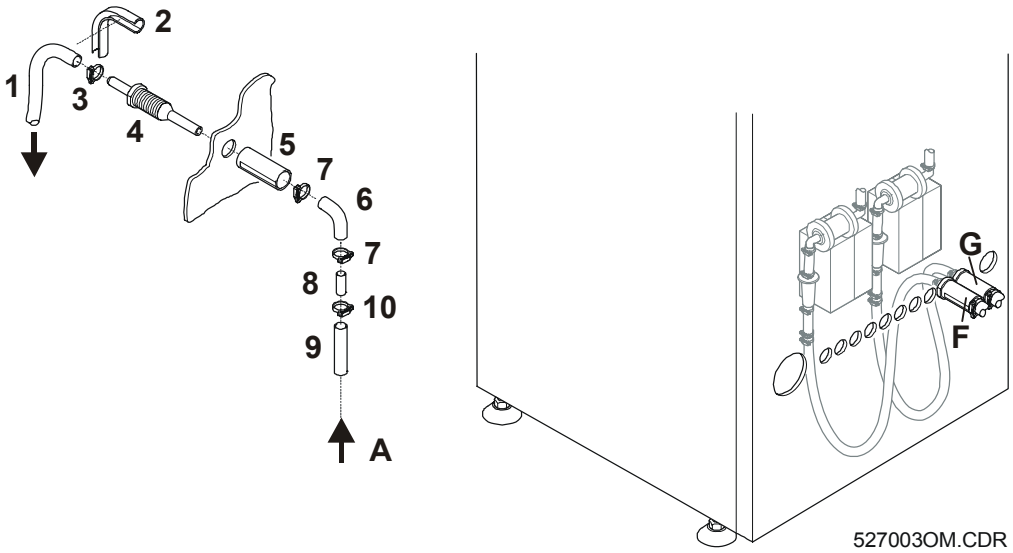

Figure 16

(F) Developer (DEV) (A) Supply direction
(G) Fixer (FIX)

POS	Designation	Configuration
1	PVC hose Ø 9x1.5 mm (0.35x0.06 inch)	Pre-installed in the machine
2	Hose positioning / reinforcement bend-protection	Not included in shipment, can be ordered, CM+7946064580
3	Hose clamp	Pre-installed in the machine
4	Hose connection stub	
5	Threaded bush	Included in the accessory box
6	Rubber elbow Ø 10 mm (0.39 inch)	Not included in shipment, can be ordered, CM+9511017970
7	Hose clamp	Not included in shipment, can be ordered, CM+7037200210
8	Pipe stub Ø 10x1 mm (0.39x0.04 inch)	Not included in shipment, can be ordered, CM+9511017920
9	PVC hose Ø 10x3 mm (0.39x0.12 inch) fiber-reinforced Developer: red Fixer: blue	Not included in the shipment, can be ordered, CM+0000064082 CM+0000064083
10	Hose clamp	Not included in shipment, can be ordered, CM+9037200230

8.2.4 Installing the disposal hoses

TYPE 5270/100

Only use **fiber-reinforced** PVC hoses Ø 19x4 mm (0.75x0.16 inch) for the external hose connections (outside the machine)!

Position the hoses **without kinks**!

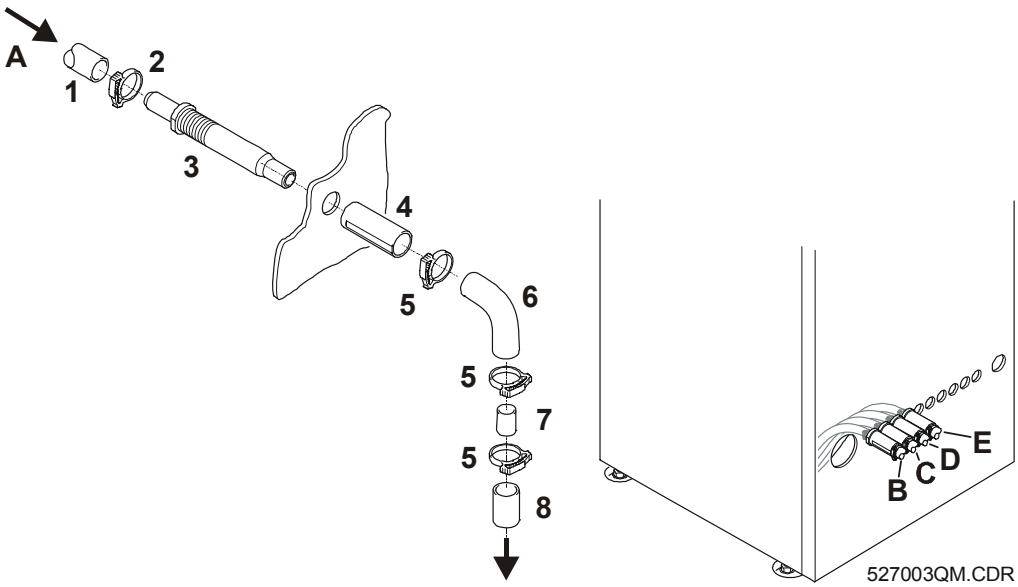

Figure 17

(A) Drain direction
(B) Developer drain / overflow
(C) Fixer drain / overflow
(D) Water drain / overflow
(E) Safety overflow, tanks

Pos	Designation	Configuration
1	PVC hose Ø 19x2.5 mm (0.75x0.10 inch) transparent	Pre-installed in the machine
2	Hose clamp	
3	Hose connection stub Ø 20 mm (0.79 inch)	
4	Threaded bush	Included in the accessory box
5	Hose clamp	Not included in shipment, can be ordered, CM+9037200400
6	Rubber elbow	Not included in shipment, can be ordered, CM+9889629521
7	Pipe stub Ø 20 mm (0.79 inch)	Not included in shipment, can be ordered, CM+7839185010
8	PVC hose, Developer (red, fiber-reinforced): Ø 19x4 mm (0.75x0.16 inch) Fixer (blue, fiber-reinforced): Ø 19x4 mm (0.75x0.16 inch) Water (transparent, fiber-reinforced): Ø 19x4 mm (0.75x0.16 inch)	Not included in shipment, can be ordered CM+0000064133 CM+0000064134 CM+0000007620

- Combine the hoses of the safety overflow (OVERFLOW) and water (WAT) with a Y piece and connect them with one drain hose, if this is permitted by the local regulations. Install the drain hose to the floor drain.

8.3 Supply and disposal through the floor

Only use **fiber-reinforced** PVC hoses Ø 10x3 mm (0.39x0.12 inch) for the external hose connections (outside the machine)!
Position the hoses **without kinks**!

Classic E.O.S. (5270/100)

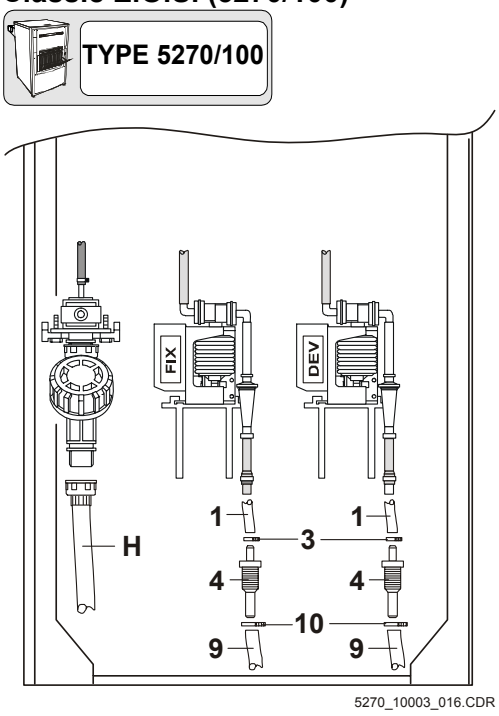

Figure 18

Classic E.O.S. CL (5270/105)

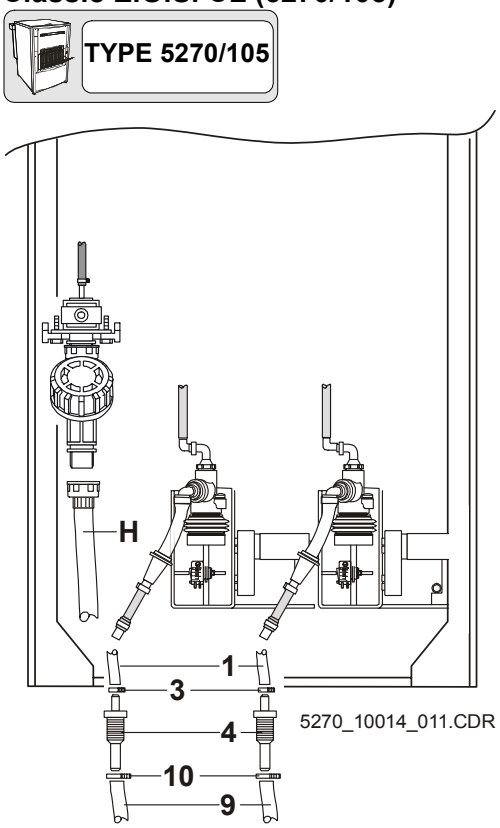

Figure 19

Pos	Designation	Configuration
1	PVC hose Ø 9x1.5 mm (0.35x0.06 inch)	Pre-installed in the machine
3	Hose clamp	
4	Hose connection stub	
10	Hose clamp	Not included in shipment, can be ordered, CM+9037200230
9	PVC hose Ø 10x3 mm (0.39x0.12 inch) fiber-reinforced Developer: red Fixer: blue	Not included in the shipment, can be ordered, CM+0000064082 CM+0000064083
H	Safety pressure hose	Included in the accessory box

- If necessary shorten the internal supply hoses and insert the hose connection stub (4) again.
- Connect the fiber-reinforced (external) PVC hoses with the hose connection stub (4) of the internal supply hoses.
- Position the hoses together through the opening in the bottom to the mixer or to the individual tanks.

8.3.1 Installing the disposal hoses

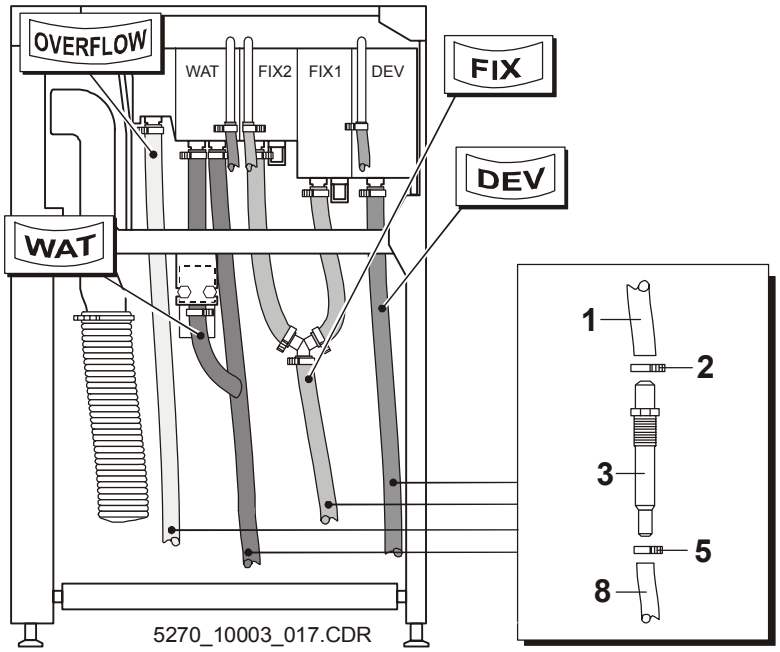

Figure 20

Pos	Designation	Configuration
1	PVC hose Ø 19x2.5 mm (0.75x0.10 inch) transparent	Pre-installed in the machine
2	Hose clamp	
3	Hose connection stub Ø 20 mm (0.79 inch)	
5	Hose clamp	Not included in the shipment, CM+9037200400
8	PVC hose, Developer (red, fiber-reinforced): Ø 19x4 mm (0.75x0.16 inch) Fixer (blue, fiber-reinforced): Ø 19x4 mm (0.75x0.16 inch) Water (transparent, fiber-reinforced): Ø 19x4 mm (0.75x0.16 inch)	Not included in shipment, can be ordered CM+0000064133 CM+0000064134 CM+0000007620

- Shorten the internal disposal hoses if necessary and insert the hose connection stub (3) again.
- Connect the fiber-reinforced (external) PVC hoses with the hose connection stub (3) of the internal disposal hoses.
- Position the disposal hoses of developer (DEV) and fixer (FIX) together through the opening in the bottom and to the central disposal site.
- Combine the hoses of the safety overflow (OVERFLOW) and water (WAT) with a Y piece and connect them with one drain hose, if this is permitted by the local regulations. Install the drain hose to the floor drain.

8.4 Replenisher tanks for developer and fixer

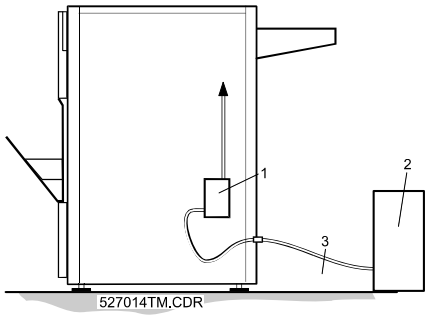

① Replenisher pump with filter
② Replenisher tanks or Mixer
③ Replenisher hose

Figure 21

- To be observed for the use of individual tanks or a mixer:
  maximum **suction height**: 2 m (78.74 inch)
  maximum **suction length**: 15 m (590.55 inch)

Replenisher tanks must not be installed inside the machine!
The customer cannot refill the tanks!

Level monitoring in the replenisher tanks
Four plugs are provided on the Control Board PCB1 for connection of the replenisher supply for mixer, developer, fixer, and for the anti-algae solution.

A communication cable with 20 m (787.4 inch) an be ordered for the Mixer:
CM+9528030301

8.5 Disposal tanks

For disposal of chemicals and wash water the regulations of the local authorities regarding the pertaining Sewage Act must be observed!

If it is allowed to drain the exhausted solutions into the sewer, then the drain pipe must be a polyethylene pipe up to the main pipe (vertical drain pipe).

The installation of the disposal lines to the disposal tanks must be carried out professionally by authorized technicians.
In Germany this must be done in compliance with §19 WHG and DIN 1988 / EN 1717:2001. In other countries the corresponding national regulations must be considered.

It must be guaranteed that developer or fixer solution never gets into the wash water, not even in case of overflow due to clogged lines, if the wash water is drained into the public sewage system. Install the respective hoses and protection facilities.

In Germany the pertaining regulations are the general minimum requirements for the disposal of waste water in waters, dated Jan. 31, 1994, Appendix 53 – Photographic Processes (silver halide photography). In other countries the respective country-specific regulations and laws must be observed.

Disposal possibilities

Disposal through the front panel (only type 5273/100):
Disposal connections through the lower front panel:

- Disposal in individual tanks (developer / fixer), and water is drained in the sewer, or
- Disposal in centralized disposal station

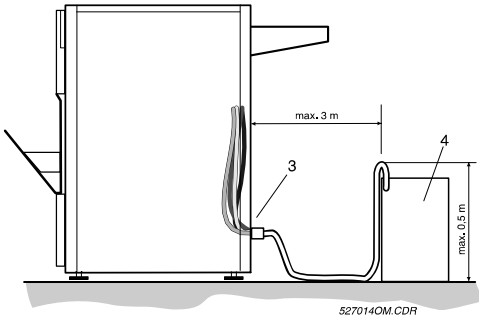

Figure 22

③ Disposal connections through the lower front panel
④ Disposal tanks

In case of a disposal with individual tanks, the disposal hoses are always filled with chemicals.

Disposal through the floor:
Disposal through the floor to the centralized disposal station with one disposal hose each for developer, fixer, and water.
For maintenance purposes we recommend a separate drain fro cleaning chemicals.

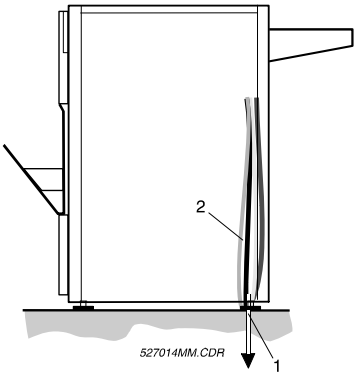

Figure 23

① Centralized disposal
② Drain hoses (below the film processor)

8.6 Water connection

Also see Chapter 3

Water consumption	Permanent replenishment: max. 3 liters / min (101.45 fl.oz. / min). The water supply rate per square meter of processed film can be changed via code.
Water pressure	2 bar (200 kPa) to 6 bar (600 kPa)
Water temperature	**min. 5 °C**
pH value	6.5 to 8
Water conductivity value	min. 3µS/cm Reliable level detection in the water tank cannot be guaranteed if this value is too low.

Regulations

The free water supply of the machine is in compliance with the regulations of DIN 1988 / EN 1717:2001 (technical regulations for the installation of drinking water).

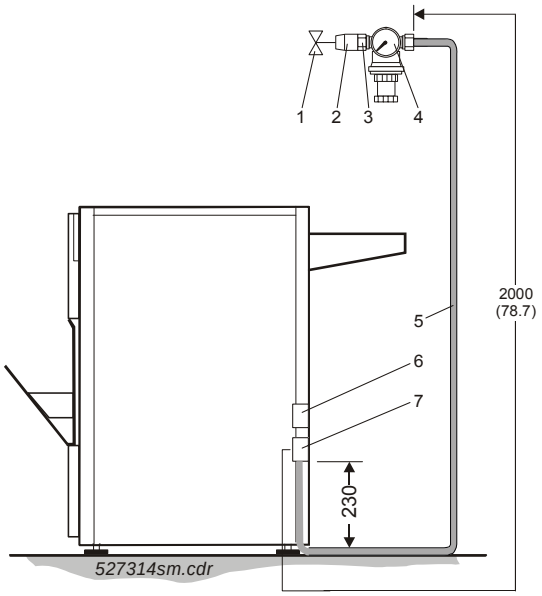

① Shut-off valve
② Clutch
③ Threaded fitting
④ Pressure reducer (manometer), for water pressure > 6 bar
⑤ Flexible safety pressure hose
⑥ Solenoid valve
⑦ Dirt filter

① - ④ not included in shipment

Dimensions in mm (inch)
Figure 24

- Position the safety pressure hose, mounted at the dirt filter, all the way to the shut-off valve or pressure reducer.
  Safety pressure hose: CM+9036260160
  tested in compliance with DIN 57700 Part 600
  2 m (78.74 inch) long
  $^3/_4$" union nut
- For safety we recommend to provide a floor drain close to the machine.

8.6.1 Wall / machine connection at a water pressure of 2 – 6 bar

To protect the drinking water from a return flow of waste water via the hand shower a safety fitting (1) must be installed. This consists of a ventilation valve with integrated check valve. The installation according to the standard DIN 1988 / EN 1717:2001 must follow the illustration!

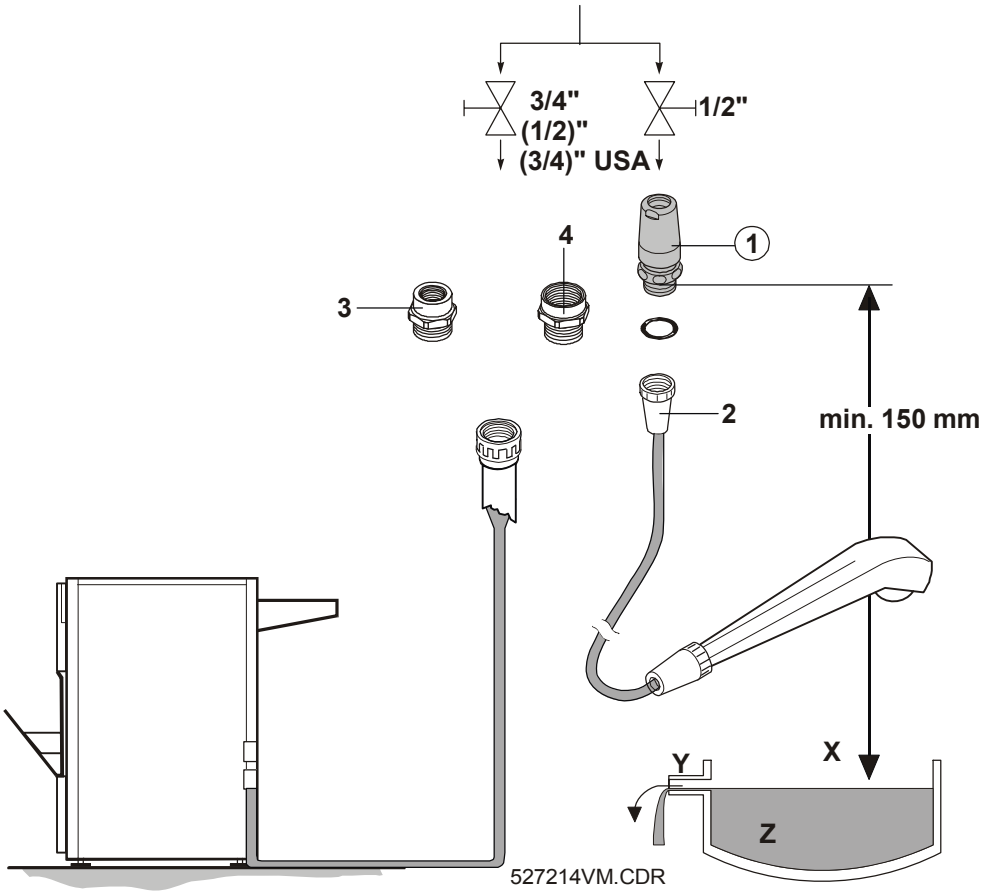

Figure 25

If necessary the individual assemblies must be supported.

X Cleaning sink
Y Overflow
Z Waste water

Pos.	Part number	Qty	Designation	Size	Remarks
①	FU+8966008	1	Safety combination, chromium plated	½"	optional
2	FU+58618	1	Hand shower with hose	½"	
3	CM+9034200580	1	Hexagon reduction piece (brass)	¾" USA	
4	CM+9034200590	1	Hexagon reduction piece (brass)	¾"	

8.6.2 Wall / machine connection at a water pressure > 6 bar

To protect the drinking water from a return flow of waste water via the hand shower a safety fitting (1) must be installed. This consists of a ventilation valve with integrated check valve. The installation according to the standard DIN 1988 / EN 1717:2001 must follow the illustration!

Set the pressure reducer to a pressure value between 2 and 6 bar!

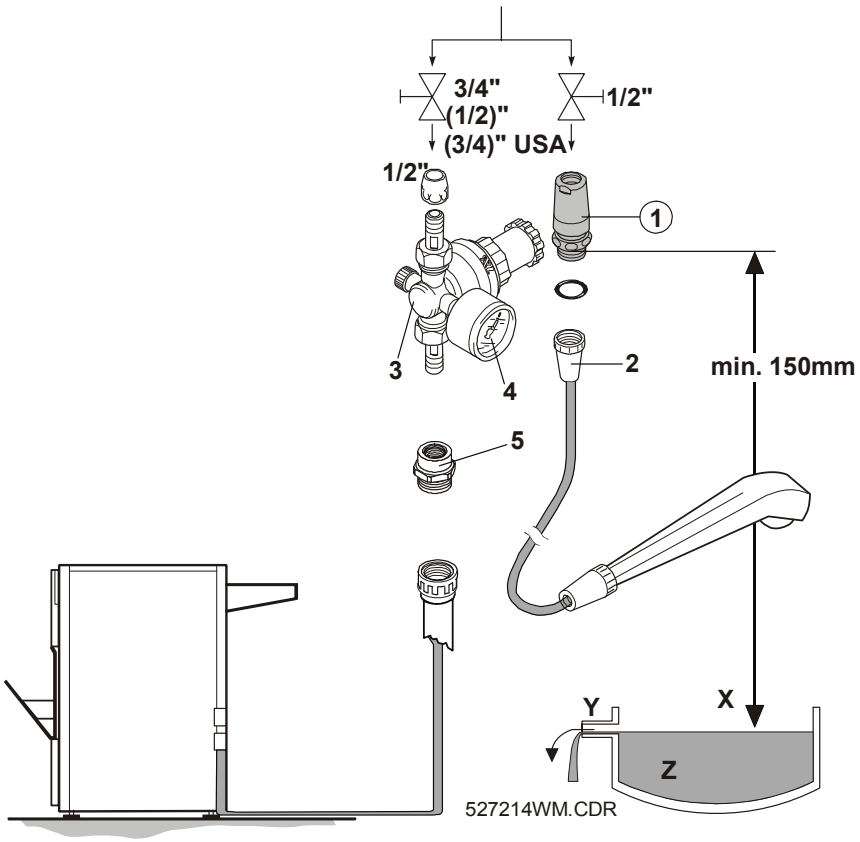

Figure 26

If necessary the individual assemblies must be supported.

X Cleaning sink
Y Overflow
Z Waste water

Pos.	Part number	Qty	Designation	Dimensions	Remarks
(1)	FU+8966008	1	Safety combination, chromium plated	½"	
2	FU+58618	1	Hand shower with hose	½"	
3	FU+8656001	1	Pressure reducer SYR 315	½"	optional
4	FU+8656002	1	Manometer 0 - 10 bar	½"	
5	CM+9034200590	1	Hexagon reduction piece (brass)	¾"	

8.6.3 Overview of adaptation parts for water installations:

Adaptation part with name	Connection	Order number/ part number
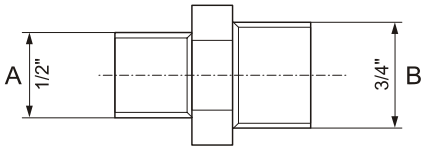 Reduction nipple (brass)	**A** ½ " external thread **B** ¾ " external thread	CM+7034200320
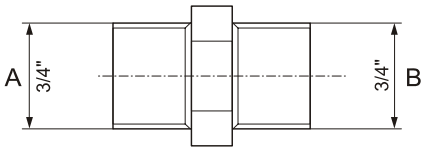 Double nipple (brass)	**A** ¾ " external thread **B** ¾ " external thread	CM+9034200600
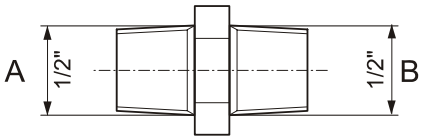 Double nipple (brass, chromium plated)	**A** ½ " external thread **B** ½ " external thread	CM+7034200260
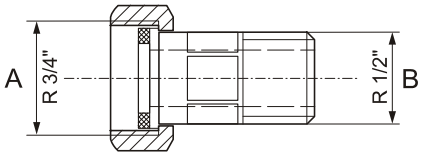 Reduction piece with seal (movable parts; brass, chromium plated)	**A** ¾ " internal thread + seal **B** ½ " external thread	CM+7034215230
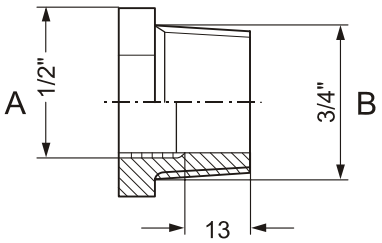 Reduction nipple (brass)	**A** ½ " internal thread **B** ¾ " external thread	CM+7034200280
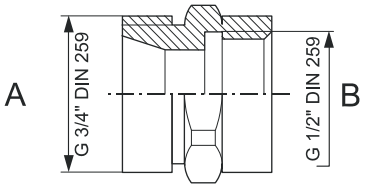 Reduction piece (brass)	**A** ¾ " external thread **B** ½ " internal thread	CM+9034200590

Adaptation part with name	Connection	Order number/ part number
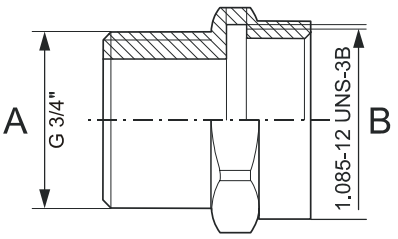 Reduction piece (fitting for USA)	**A** ¾ " external thread **B** 1.085-12 UNS-3B internal thread PIPE THREADS American National Standard	CM+9034200580
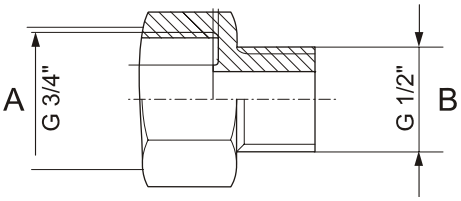 Reduction piece (brass, compact part)	**A** ¾ " internal thread **B** ½ " external thread	CM+7523010550
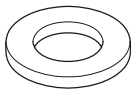 Flat seal	for ½ " screw connection ¾ " screw connection	 CM+9896611740 CM+9034200610
Pressure hose	**A** ¾" union nut **B** ¾" union nut	CM+9036260160

8.7 Exhaust connection

Also see Chapter 3

8.7.1 Exhaust connection through lower front panel (only Type 5270/100)

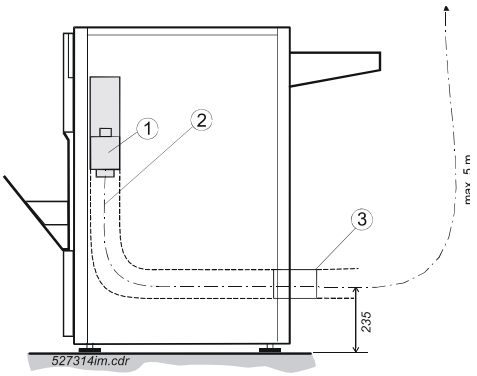

① Flexible exhaust hose ∅ 100 mm
② Crossover
③ Connection piece for exhaust hose

Dimensions in mm

Figure 27

The film processor has an integrated exhaust unit.

- Connection stub at the machine: ∅ 100 mm
- Max. length of the exhaust hose: 5 m.
  If the hose is longer install an additional fan!
- Exhaust volume:
  min. 50 m³/h – max. 100 m³/h

For functional reasons the exhaust connection must always lead out of the machine.

8.7.2 Exhaust connection through the floor

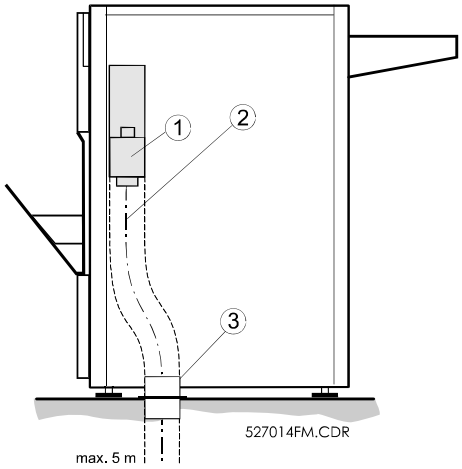

Dimensions in mm

① Flexible exhaust hose
∅ 100 mm

② Exhaust connection through the floor

③ Exhaust connection:
2 screw-type exhaust connections;
center hole through the floor
∅ ≥ 114 mm
Order no.: CM+9522030091

Figure 28

The film processor has an integrated exhaust unit.

- Connection stub at the machine: ∅ 100 mm
- Max. length of the exhaust hose: 5 m
  If the hose is longer install an additional fan!
- Exhaust volume:
  min. 50 m³/h – max. 100 m³/h

For functional reasons the exhaust connection must always lead out of the machine.

8.8 Electrical connection of the machine

Power connection	1N~ 230 – 240 V; 50/60 Hz (200 - 240 V)
Fuse protection	15 / 16 A
	A GFI switch: (I_N = 30 mA in compliance with VDE 664) is integrated in the machine.
Leakage current towards PE	< 3.5 mA
Protective earth	< 0.1 Ω towards ground
Installation regulations	VDE Electrical installations in the installation room must be in compliance with the regulations IEC 364, VDE 0100 and VDE 0107. UL Electrical installations in the installation room must be in compliance with the regulation "National Electrical Code" (NEC) (NFPA 70).
Mains connection in the installation room	VDE Double shockproof outlet according to DIN 49441 and CEE 7 standard plate VII UL Outlet for three-prong plugs NEMA 6-20 R
Required connection cable (scope of delivery)	VDE PVC line H05VV - F 3G 1.5 (3 wires) cable length 3.5 m usable length 2.3 m UL Cable included in the accessory box to replace the VDE cable. PVC line SJT 3 x AWG 12 (with plug NEMA 6-20 P) cable length 3.4 m usable length 2.4 m
Main breaker	Upon machine installation it must be ensured that either the mains connector or an all-pole circuit breaker for the installation on site is located close to the machine and easily accessible.

Outlet connection:

① All-pole main breaker (option: if there is no access to the outlet)
② Mains supply with outlet
③ Power cable with three-prong plug
④ GFI switch (I_N = 30 mA, in compliance with VDE 664)

Note:
Parts ① and ② are not included in the machine shipment.

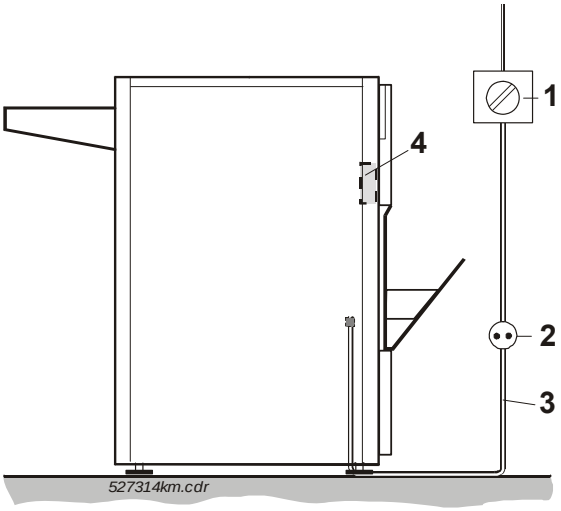

Figure 29

9 Technical Data

9.1 Electrical data

Power connection	1N~ 230 – 240 V; 50/60 Hz (200 - 240 V)
Power consumption: **Standby** **(room temperature ~ 20 °C)** **during film processing**	 0.45 kWh (1620 kJ) 2.9 kW/h (10440 kJ/h)
Fuse protection	15 A / 16 A
Leakage current towards PE	< 3.5 mA
Main breaker	Upon machine installation it must be ensured that either the mains connector or an all-pole circuit breaker for the installation on site is located close to the machine and easily accessible.
Safety regulations	Electrical installations in the installation room must be incompliance with IEC 364 (VDE 0100 / 0107).
	A GFI switch: (I_N = 30 mA in compliance with VDE 664) is integrated in the machine.

9.2 Ambient and climatic conditions

Room temperature	min. 10 °C (50 °F), max. 30 °C (86 °F) Room temperature min. 5 °C (41 °F) below the set developer temperature
Relative humidity	min. 10 %, max. 80 %, no condensation
Ventilation	Avoid inhaling of chemical fumes. Make sure that there is sufficient ventilation at the installation site of the machine, i.e. an air exchange that is at least ten times the room volume per hour.
Light-tightness	maximum 2500 Lux
	The machine must not be opened during the operation. It is light tight only if all panels are correctly mounted.
Acoustic test ISO 7779 (airborne noise)	during standby max. 35 dB (A) during film cycle max. 48 dB (A)

Radiation effects	Upon machine installation in the close vicinity to the X-ray room, the local regulations for radiation protection must be followed (protection of personnel against scattered radiation). The machine has not been designed for the installation in the X-ray room, i.e. there is no internal screening against scattered radiation.		
Floor conditions	Waterproof, chemical-resistant floor covering (pH value 4 - 11) A floor drain close to the film processor is recommended.		
Floor load	50 N / cm² (7.75 N / in²)		
Cleaning sink	A cleaning sink with water tap and hose shower should be provided for maintenance work. Minimum inside dimensions of the sink: Width 70 cm (27.56 inch) Depth 40 cm (15.75 inch) Height 20 cm (7.87 inch)		
Heat emission (approx. values)	Standby (max.)	into the room	250 W / 900 kJ/h
	Film run (max.)	into the connected exhaust	1200 W / 4320 kJ/h
		into the room	900 W / 3240 kJ/h
		total	2100 W / 7560 kJ/h
	Exhaust connect.	Integrated exhaust in the dryer is a standard feature. During film cycle the exhaust runs at full capacity. During standby mode the exhaust can be set to half-capacity via the service program.	

9.3 Transport and storage conditions

Ambient temperature	up to max. -25 °C for 72 h (IEC 68-2-1 (Ab)) max. 55 °C for 96 h (IEC 68-2-2 (Bb)) Relative humidity in the given temperature range between 5% and 95%.

10 Machine Specifications

10.1 Type overview

Machine	Type	Power connection	ABC Code
Classic E.O.S.	5270/100	1N~ 230-240 V (200 - 240 V) 50/60 Hz	ECZ26
Classic E.O.S. CL	5270/105	1N~ 230-240 V (200 - 240 V) 50/60 Hz	ECZ38

10.2 Film types

All commercially available medical x-ray films suitable for machine processing.

10.3 Film formats

Type 5270/100

Sheet films	smallest size	10 x 10 cm (3.9 x 3.9 inch)
	largest size	35 x 43 cm (13.8 x 16.9 inch)
	max. film width	43.5 cm (17.1 inch)
Roll film	Processing of roll film is **NOT** possible!	

Type 5273/105

Sheet films	smallest size	13 x 18 cm (5.1 x 7.1 inch)
	largest size	35 x 43 cm (13.8 x 16.9 inch)
	max. film width	43.5 cm (17.1 inch)
Roll film	Processing of roll film is **NOT** possible!	

10.4 Functional data

Process code	HT (60s)	IP (90s)	RP (2min)	EXT (3min)
Feeding speed	160 cm/min (62.99 in/min)	106 cm/min (41.73 in/min)	80 cm/min (31.5 in/min)	52 cm/min (20.47 in/min)
Processing time in DEV	12.5 sec	18.8 sec	24.9 sec	38.3 sec
Processing time (film 35 x 35 cm) Film: end / end incl. Film	71 sec 82 sec	107 sec 124 sec	142 sec 164 sec	218 sec 253 sec
Films / h (35 x 35 cm)	220	150	110	75
Machine tank volumes Developer Fixer 1 Fixer 2 Water	8.8 l (297.6 fl.oz.) 10 l (338.18 fl.oz.) 5.8 l (196.15 fl.oz.) 5.8 l (196.15 fl.oz.)			
Developer tank temperature standard adjustable between 25 °C (77 °F) - 39 °C (102.2 °F)	38 °C (100.4 °F)	36 °C (96.8 °F)	34 °C (93.2 °F)	34 °C (93.2 °F)
Fixer 2 tank temperature	34 °C (93.2 °F)			
Heating time from 20 °C (68 °F) to 34 °C (93.2 °F)	approx. 20 min			
Dryer step setting	13 (Software Version CLLC1107; older versions: 10 steps)			
Standard setting replenishment cycles Developer / fixer	0.25 m² (3.88 in²)			
Standard setting Replenishment rate Developer / fixer Water	400 ml/m² 30000 ml/m²			
Range Replenishment rate Developer / fixer Water	50 – 800 ml/m² 3000 – 30000 ml/m²			
Water supply	3000 ml/min (101.45 fl.oz./min)			
Adjustment range for water pressure min. max.	2 bar 6 bar			
Water conductivity value	min. 3 µS / cm If the value drops below this threshold reliable level detection in the water tank can no longer be guaranteed!			
Water pH value	6.5 to 8			
Silver concentration in the waste water	< 1 ppm			

11 Dimensions and Weights

11.1 Classic E.O.S. Type 5270/100

Dimensions

	Length mm (inch)	Width mm (inch)	Height mm (inch)
incl. packing box	1200 (47.24)	800 (31.5)	1460 (57.48)
without packing material (with feed table and chute)	1270 (50)	710 (27.95)	1130 (44.49)

Weight

	Weight approx. kg (lbs)
with packing material	200 (441)
without packing material	135 (297)
with full tanks	165 (364)

11.2 Classic E.O.S. CL Type 5270/105

Dimensions

	Length mm (inch)	Width mm (inch)	Height mm (inch)
incl. packing box	1200 (47.24)	800 (31.5)	1460 (57.48)
without packing material (with docking unit and chute)	1070 (42.16)	710 (27.95)	1130 (44.49)

Weight

	Weight approx. kg (lbs)
with packing material	200 (441)
without packing material	135 (297)
with full tanks	165 (364)

12 Machine Standards and Directives

12.1 Safety

Europe

EN 60950 / A11 1997 "Safety of Information Technology Equipment" (identical with IEC 950: 1992 and with VDE 0805/ 11. 97).

USA

UL 1950 July 3, 1995 “Safety of Information Technology Equipment, Including Electrical Business Equipment”.

Canada

CSA 22.2 No. 950 - 95 “Safety of Information Technology Equipment, Including Electrical Business Equipment”.

12.2 Radio interference suppression

Europe

In compliance with EN 50081-1: 1992 "Generic Standard for Emission Requirements", (identical with VDE 0839, Part 81-1/ 03. 93)
EN 55011 1998, Class B "Radio Disturbance Characteristics of Medical Equipment" (corresponds to VDE 0878, Part 22 / 04.98)
For equipment in residential areas, business and commercial areas, and in doctors’ offices.

North-America (USA, Canada)

US Standard FCC 47 Part 15, Subchapter B, Class A / Edition 8/ 1976
Equipment considered “Non-Household Appliances”

12.3 Electromagnetic compatibility

EMVG (German Electromagnetic Compatibility Act) and
EC Regulation 89 / 336 / EEC; EN 50082-1: 1997
EN 61000-3-2 “Limit Values for Harmonic Emissions”
EN 61000-3-3 “Limit Values for Flicker”

12.4 Certificates and guidelines

CE Medical Device Directive	93/42 EEC
TÜV Product Service Mark	"Design tested and monitored"
UL Approbation	E 477 50 (M)
C-UL Approbation	E 477 50 (M)

"Technical directives for drinking water installations, protection against reflux"	DIN 1988, Part 4/ 1988 / EN 1717:2001

General conditions and administrative regulations for minimum requirements on the disposal of waste water into public waters, dated 31.01.1994 **(Germany)**	Appendix 53 – Photographic Processes (silver halide photography)

Ministry for Environmental Protection (France)	Rubrique No. 2950 Maximum water consumption for - single-layer emulsions must not exceed a maximum of 15l/m^2 * - double-sided emulsions must not exceed a maximum of 30l/m^2 * * Activated in the program <Service Settings / Replenishment / Wat. Repl. Value>

13 Checklist for Installation Planning

General			**yes no**
1	**System components**	Film processor Daylight system Mixer Replenisher tanks Centralized disposal Disposal tanks Silver recovery (fixer, water)	❒ ❒ ❒ ❒ ❒ ❒ ❒ ❒ ❒ ❒ ❒ ❒ ❒ ❒
2	**Transport path**	Sufficient floor load Elevator (door size, load) Door size	❒ ❒ ❒ ❒ ❒ ❒
3	**Installation version**	Daylight Darkroom	❒ ❒ ❒ ❒
4	**Unloading and unpacking**	Free space provided for lifting the machines off the pallet	❒ ❒
Required external connections:		**prepared:**	**yes no**
5	**Film processor**	All-pole circuit breaker Outlet (distance to machine:_____m)	❒ ❒ ❒ ❒
6	**Mixer**	Outlet (distance to machine:_____m)	❒ ❒
6	**Silver recovery**	Outlet (distance to machine:_____m)	❒ ❒
7	**Hose connections**	Supply and disposal through rear wall Supply and disposal through the floor Exhaust hose required, length_____m Exhaust: connection piece installed on site Supply hoses installed Disposal hoses installed	❒ ❒ ❒ ❒ ❒ ❒ ❒ ❒ ❒ ❒ ❒ ❒
8	**Air conditioning system**	Exhaust connection installed Exhaust rate sufficient	❒ ❒ ❒ ❒
9	**Water connection**	present	❒ ❒
10	**Free space around machine**	Required minimum guaranteed	❒ ❒
11	**Wall opening**	considered	❒ ❒

Copyright © 03.2004 DD+DIS303.03E Agfa-Gevaert AG
All rights reserved

Published by

Agfa-Gevaert AG
Fototechnik
Tegernseer Landstraße 161
D - 81539 München

Misprints, errors, and technical modifications reserved

AGFA and the Agfa-Rhombus are trademarks of Agfa-Gevaert AG, Germany

AGFA

Glossary / Key Word Index

15

Section 15

comprises of two parts:

- Glossary:
  Explanation of special terms and abbreviations

- Key Word Index:
  Alphabetic listing of machine specific terms with reference to the section where this term is explained in detail.

Chapter 15

Contents

1 Glossary 1

1 Glossary

BASEINIT	Basic Initialization – Resets the parameters of the film processor to default (as delivered ex-factory), all customer specific settings are deleted and must be entered again in the SERVICE program.
CE	Communauté Européenne, European Community
CEE	Communauté Economique Européenne, European Economic Community
CPU	Central Processor Unit, main processor
CRT cassette	Cathode Rate Tube (Scopix) cassette
CSA	Canadian Standards Association
DEV	Developer, abbreviation
DIN	Deutsches Institut für Normung, German Standardization Institution
DOCKING	Machine version Classic E.O.S. Type 5270/105 designed for operation in connection with Laser Imager LR3300
DUKA table	Darkroom feed table
(E)EPROM	(Electrically) Erasable Programmable Read-Only Memory
EEC	European Economic Community
EMVG / EMC	Electromagnetic compatibility of devices
EN	European Norm = European Standard
EOS	Ecologically Optimized System – Film processor with double fixer tank system, which reduces the silver carry-over into the water tank considerably.
ESD	Electro Static Discharge
EXT Process	Extended Process – longest processing time (3min) for top film quality
FCC	Federal Communications Commission
GFI switch	Ground fault interrupter (German abbr.: FI)
FIX	Abbreviation for Fixer
SN	Serial Number, consecutive number to identify machines (German: FN)
GAL	Generic Array Logic
GFCI	Ground Fault Circuit Interrupter
GS	Printed circuit (German: Gedruckte Schaltung)

HT Process	High Throughput Process - shortest processing time (60 s)
IC	Integrated Circuit
IEC	International Electro-technical Commission
Immersion time DEV	Time a film spends in the developer solution.
Impeller	Blade wheel of the circulation pump
Info Logbook	Function of the machine software which records detailed information about an occurred problem in chronological sequence.
Infocounter	Program module of the machine software to save machine indications and operation data.
Interface	Defined interface between a device and software.
IP Process	Intermediate Process – medium processing time (90s)
IR	Infra-Red light
ISO	International Organization for Standardization
Jog-cycle	Replenishment of the set developer and fixer rate always after an hour without film development.
LCD	Liquid Crystal Display
LED	Light Emitting Diode
NEC	National Electrical Code
NFPA	National Fire Protection Association
OEM	Original Equipment Manufacturer
Offset current	The current increase measured by the current sensor of the film processor when an additional consumer switches on.
OMT	Object Modeling Technique
PAP hose	Exhaust hose made of cardboard – aluminum – cardboard
PCB	Printed Circuit Board, (in German “GS”)
PE	Protective Earth
PG screw connection	Heavy-duty screw connection (strain relief for cables)
PLD	Programmable Logic Device
PLLC	Plastic Leadless Chip Carrier, solder-free plastic socket for chips with contact faces on all four sides
RAM	Random Access Memory, working memory of a CPU

Replenishment	Supply of developer, fixer, or water, to replenish the respective solutions
RP Process	Regular Process Standard processing time (2min)
Sensitometry	Procedure to check the sensitivity of photographic plates and films.
Shockwatch	Indicator, which indicates if the machine was exposed to illegally strong impacts.
SOLO	Machine version Classic E.O.S. Type 5270/100 designed for standalone operation.
TEACH IN	Program module of the machine software to determine current reference values (only in machines with current sensor).
Tiltwatch	Indicator, which indicates if the machine was tilted.
Timeout	If a function cannot be carried out within a given monitored time frame, the functional sequence or the complete machine will be stopped.
VDE	Institution of German electricians
WAT	Water, abbreviation

Order No.:
DD+DIS301.03E

Classic E.O.S.

Type 5270 / 100 as of SN 4500

Classic E.O.S. CL

Type 5270 / 105 as of SN 1138
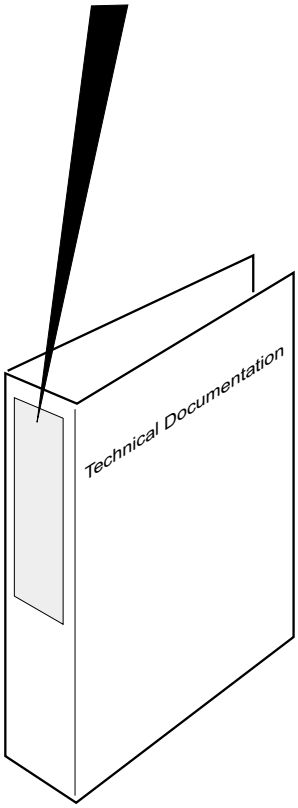
6th Edition