alt

SIEMENS
AKTIENGESELLSCHAFT
Bereich Medizinische Technik

ÜBERSICHTSBLATT
zum Schaltplan

Teil **1 +**

Typen-Nr. **X1706**

Erzeugnis Sachnummer	Index	Blattnummern 1A	1B		2	3	4	4A	5	6	7	8	9	Änd.-Mittlg.	Datum	Sign.
		Ausführungsnummern														
Polymobil 84 59 364, 86 96 064 208,220,240V 50-60Hz	A	1	1	----	1	1	1	1	1	1	1	1	1	------	28.5.85	Ra Br.
	~~B~~	~~1~~	~~2~~		~~1~~	~~1~~	~~1A~~	~~1A~~	~~2~~	~~1~~	~~1~~	~~2~~	~~1~~	46228	10.10.86	Ra Br.
	~~B~~	~~1~~	~~2A~~		~~1~~	~~1~~	~~1A~~	~~1A~~	~~2A~~	~~1~~	~~1~~	~~2~~	~~1~~	46235	12.1.87	Ra Br.
86 19 231 86 96 056 100, 110, 125V 50 - 60 Hz	B	1A	2A	----	1	1	1A	1A	2A	1	1	2	1	47322	31.07.87	Ra Br
Polymobil II 87 11 152 208, 220, 240V 50 - 60 Hz																
87 11 160 100, 110, 125V 50-60 Hz.																

	10	11	13	15	13A	13B	13C			30					
			X1558	X1558											
			D3	D6	D12	D12	D12								
A	1	1	3	1A	1	1	1	----	----	1	----	----	------	28.5.85	Ra Br.
~~B~~	~~1~~	~~1~~	~~3~~	~~1A~~	~~2~~	~~2~~	~~2~~			~~2~~			46228	10.10.86	Ra Br
~~B~~	~~1~~	~~1~~	~~3~~	~~1A~~	~~2~~	~~2~~	~~2~~			~~2A~~			46235	12.1.87	Ra Br
~~B~~	~~2~~	~~1~~	~~3~~	~~1A~~	~~2~~	~~2~~	~~2~~			~~2A~~			47322	31.07.87	Ra.Br.
B	2	1	3	1A	2	2	2	----	----	2B	----	----	48768	31.5.88	Ra. Br.

X1706 - UE1 +

Übersichtsblatt / Surveysheet / Feuillet synoptique / Cuadro sinóptico
Erzeugnis / Product / Produit / Producto
Sachnummer / Identification No. / No. du modèle / No. interno
Blattnummern / Sheet No. / No. du feuillet / No. de hoja
Ausführung / Sheet modification / Modification du feuillet / No. de diseño
Typen-Nr. / Type number / numéro du tipo
Teil / Part / Pièce / Parte
Änd.-Mittlg. / A mendment / Avis de modification / Aviso de modification
Als Betriebsgeheimnis anvertraut. Alle Rechte vorbehalten.
Proprietary data, company confidential. All rights reserved.
C à à titre de secret d' entreprise. Tous droits réservé.
Confiadc mo secreto industrial. Nos reservamos todos los derechos.

Blattverw.

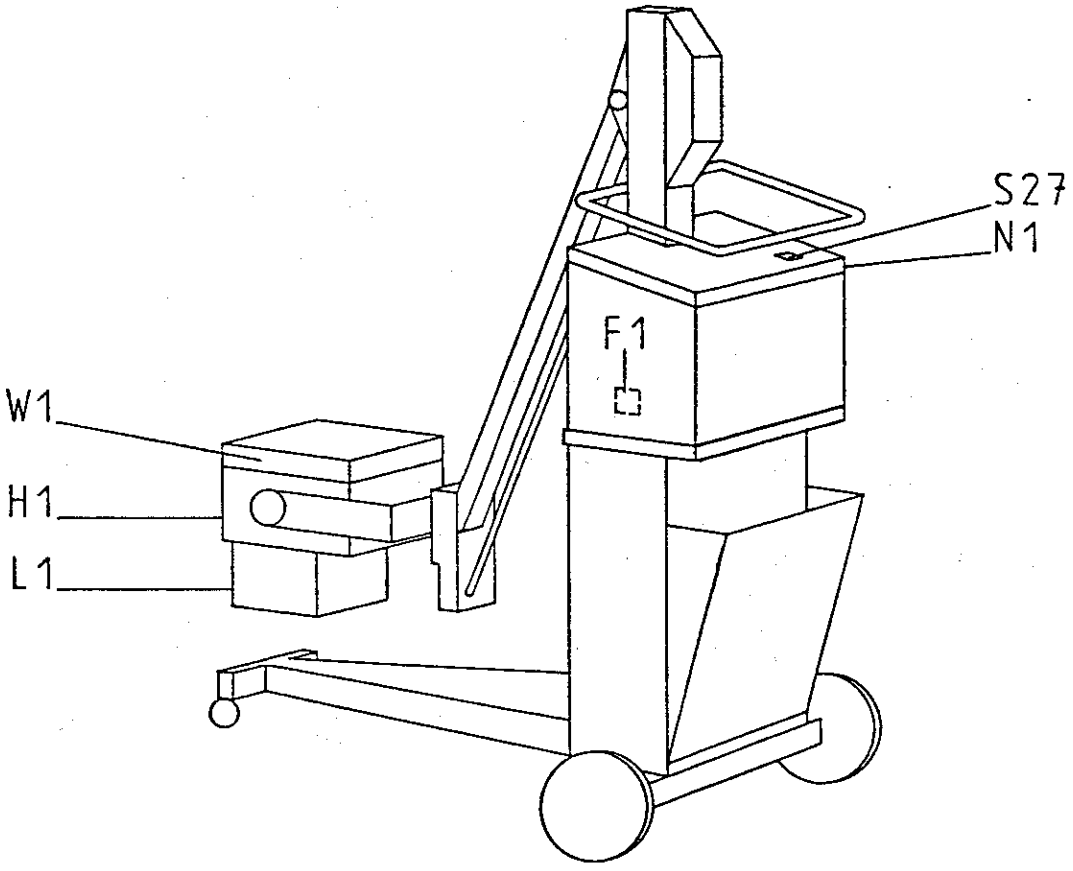

List of pages

	Page	
	1A	List of pages, presentation of product
	1B	List of assembly groups and boards
	2	Inverter/firing stage/BK-acquisition
	3	Single-tank
	4	Voltage supply, power "on/off" 208V, 220V , 240V 50-60Hz
	4A	Voltage supply, power "on/off" 100V, 110V, 125V 50-60Hz
	5	D4 control electronics
	6	kV-adjustment
	7	Filament circuit with mA-adjustment
	8	Control circuit-radiographic preparation
	9	kV-mA BK-monitoring
	10	Collimator timer
	11	List of relays and switches
	13	D3 power pack assembly
	13A,B,C	D12 control-adjustment board
X1558 -	15	D6 inverter/firing stage/BK-acquisition
	30	Compatibility list

Funktionsv.

Blattverw.

List of assembly groups and boards

Symbol	Function	Number	Page
N1	Control unit	84 56 501 X 1706	
D3	Power pack assembly	84 63 424 X 1558	
D4	Operation electronics	87 00 833 X 1706	
D12	Control adjustment board	86 95 942 X 1706	
S27	Release button	84 56 550 X 1706	
F1	Overcurrent switch	77 50 557 B 1308	4
		77 54 609 B 1308	4A
W1	Power assembly	84 63 168 X 1706	
D6	Inverter board	74 69 810 X 1558	
H1	Single-tank	84 63 069 X 1426	
D1	Adapter	80 94 617 X 1426	
L1	Collimator with collimator timer	84 56 568 X 1706	

Funktionsv.

BLATTVERW.

JNKTIONSV.

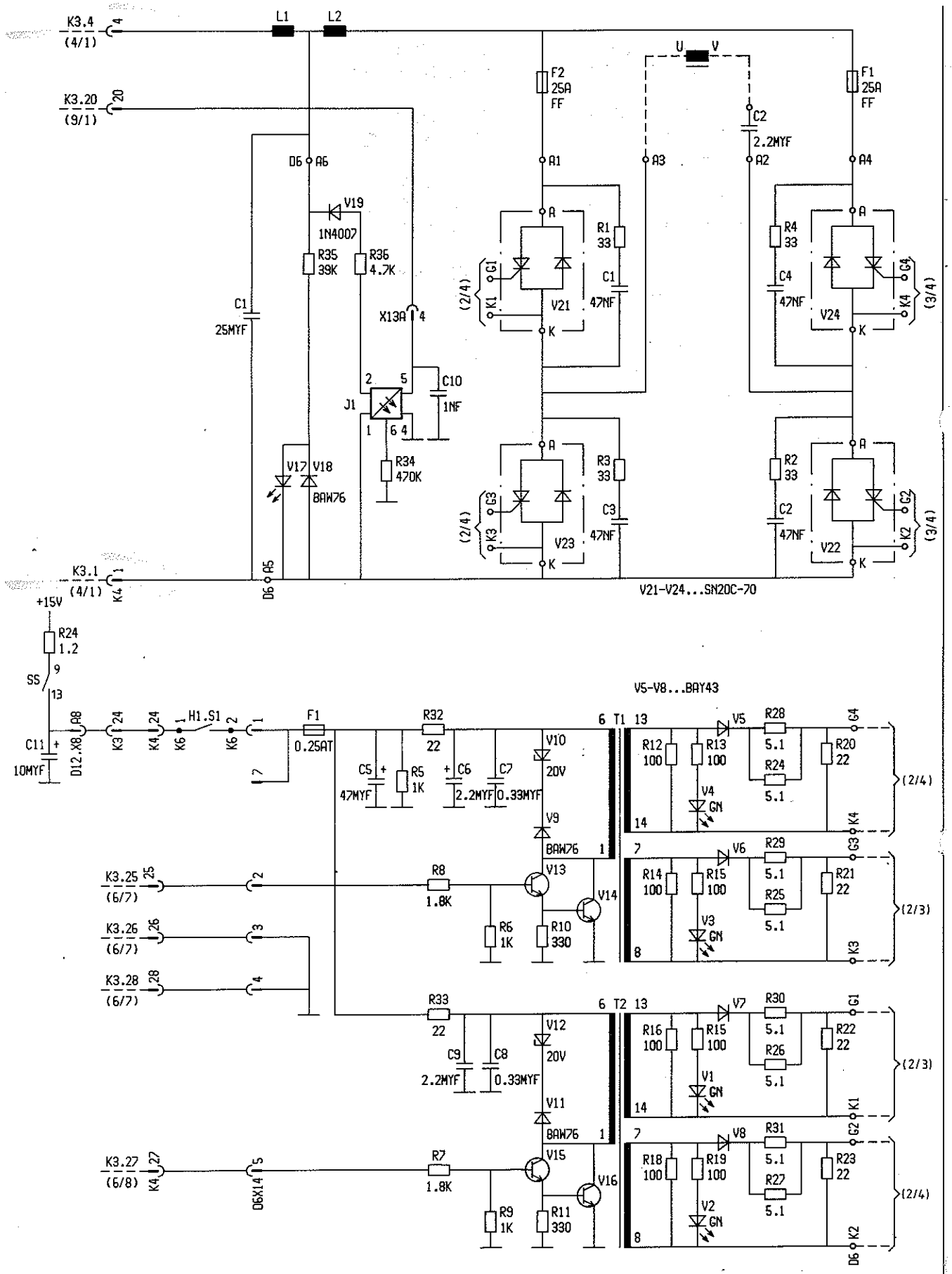

1 2 3 4

R5

WECHSELRICHTER/ZUENDSTUFE/BK-ERFASSUNG
INVERTED CONVERTER/IGNITION STAGE/BK-ACQUISITION
INVERSEUR/ETAGES D AMORCAGE/ACQUISITION COURT-CIRCUIT DE PONT
CONVERTIDOR CONTINUA-ALTERNA/PASOS DE ENCENDIDO/DETERMINACION DE CORTOCIRCUITOS EN PUENTE

X1706-2-1

23.02.85

BLATTVERW.

FUNKTIONSV.

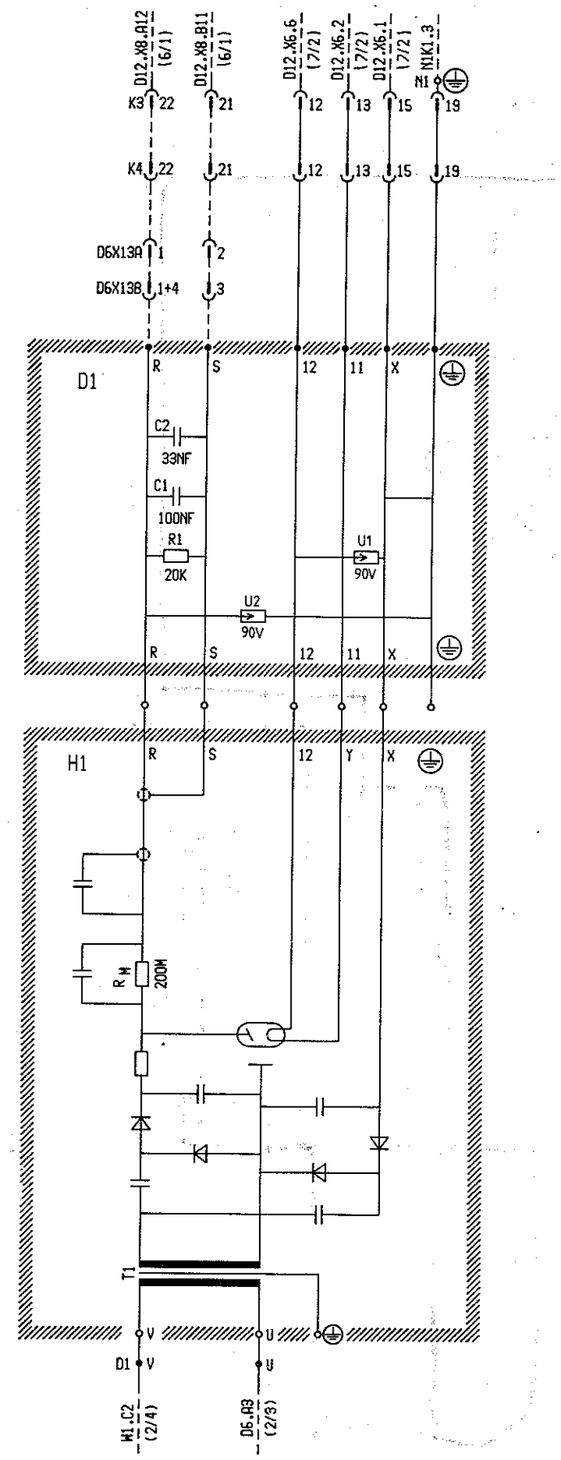

1 2 3 4

EINTANK
SINGLE-TANK
MONOCUVE
MONOBLOQUE

X1706-3-1

23.01.85

V6

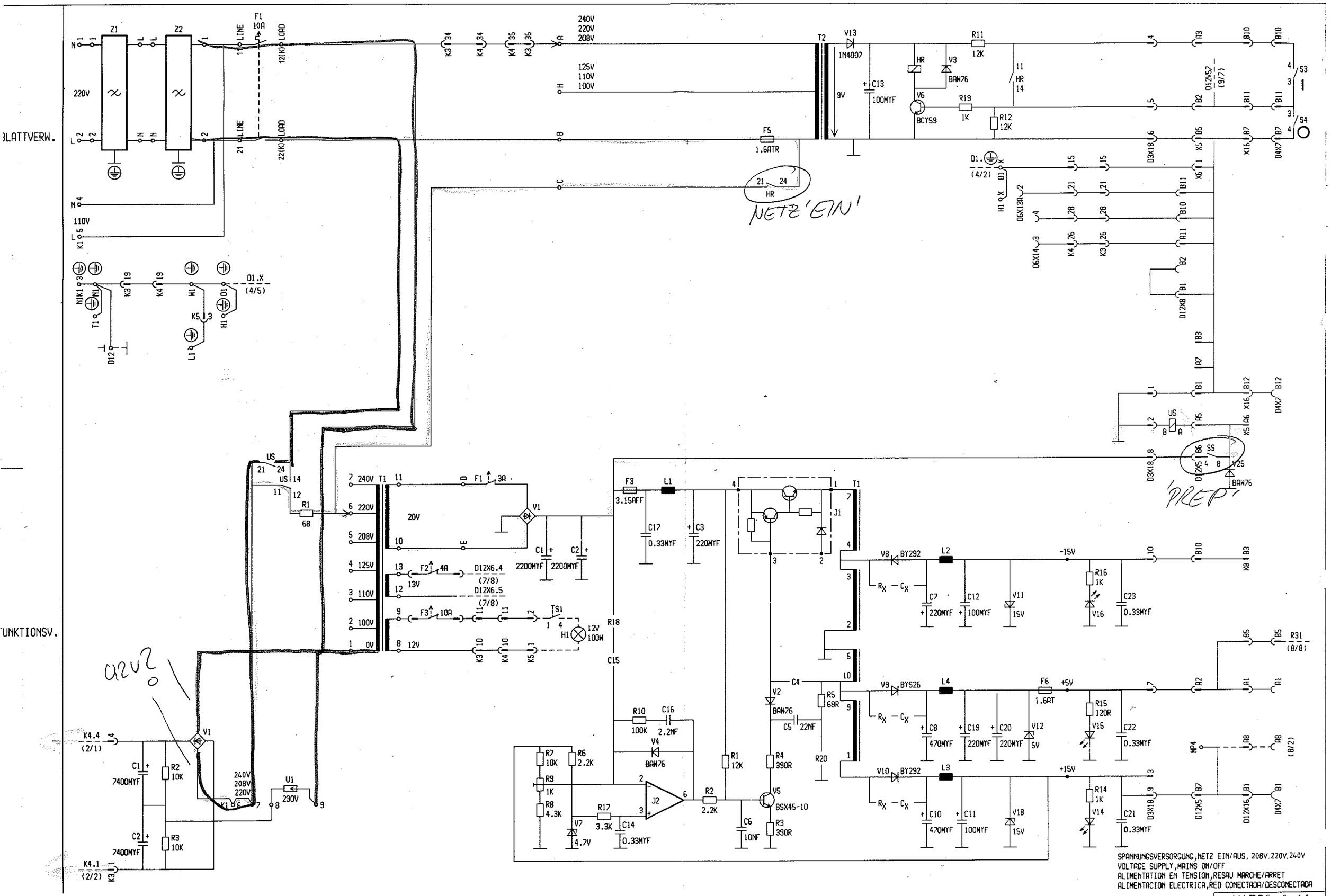
BLATTVERW.
FUNKTIONSV.
Z1
Z2
220V
110V
F1 10A
LINE
LOAD
240V
220V
208V
125V
110V
100V
T2
V13
1N4007
9V
C13
100MYF
HR
V3
BAW76
V6
BCY59
R11 12K
R19 1K
R12 12K
F5 1.6ATR
NETZ'EIN'
S3
S4
D1.X (4/5)
D1. (4/2)
D12V52 (9/7)
D6X13
D6X14
D12X8
D3X18
D4X7
X5
X6
X16
US
SS
'PREP'
BAW76
T1
240V
220V
208V
125V
110V
100V
0V
20V
13V
12V
F1 3A
F2 4A
F3 10A
D12X6.4 (7/8)
D12X6.5 (7/8)
TS1
H1 12V 100W
V1
C1 2200MYF
C2 2200MYF
R1 68
F3 3.15AFF
L1
C17 0.33MYF
C3 220MYF
C15
R18
R10 100K
C16 2.2NF
V4 BAW76
R7 10K
R6 2.2K
R9 1K
R8 4.3K
R17 3.3K
C14 0.33MYF
V7 4.7V
J2
R2 2.2K
R1 12K
C6 10NF
C4
V2 BAW76
C5 22NF
R5 68R
R4 390R
R20
V5 BSX45-10
R3 390R
J1
V8 BY292
V9 BYS26
V10 BY292
L2
L4
L3
-15V
+5V
+15V
C7 220MYF
C12 100MYF
V11 15V
R16 1K
V16
C23 0.33MYF
C8 470MYF
C19 220MYF
C20 220MYF
V12 5V
F6 1.6AT
R15 120R
V15
C22 0.33MYF
C10 470MYF
C11 100MYF
V18 15V
R14 1K
V14
C21 0.33MYF
R31 (8/8)
MP4 (8/2)
X8
D12X5
D12X16
D4X7
K4.4 (2/1)
K4.1 (2/2)
C1 7400MYF
C2 7400MYF
R2 10K
R3 10K
240V 208V 220V
U1 230V
SPANNUNGSVERSORGUNG,NETZ EIN/AUS, 208V,220V,240V
VOLTAGE SUPPLY,MAINS ON/OFF
ALIMENTATION EN TENSION,RESAU MARCHE/ARRET
ALIMENTACION ELECTRICA,RED CONECTADA/DESCONECTADA
X1706-4-1A
06.08.85
R6

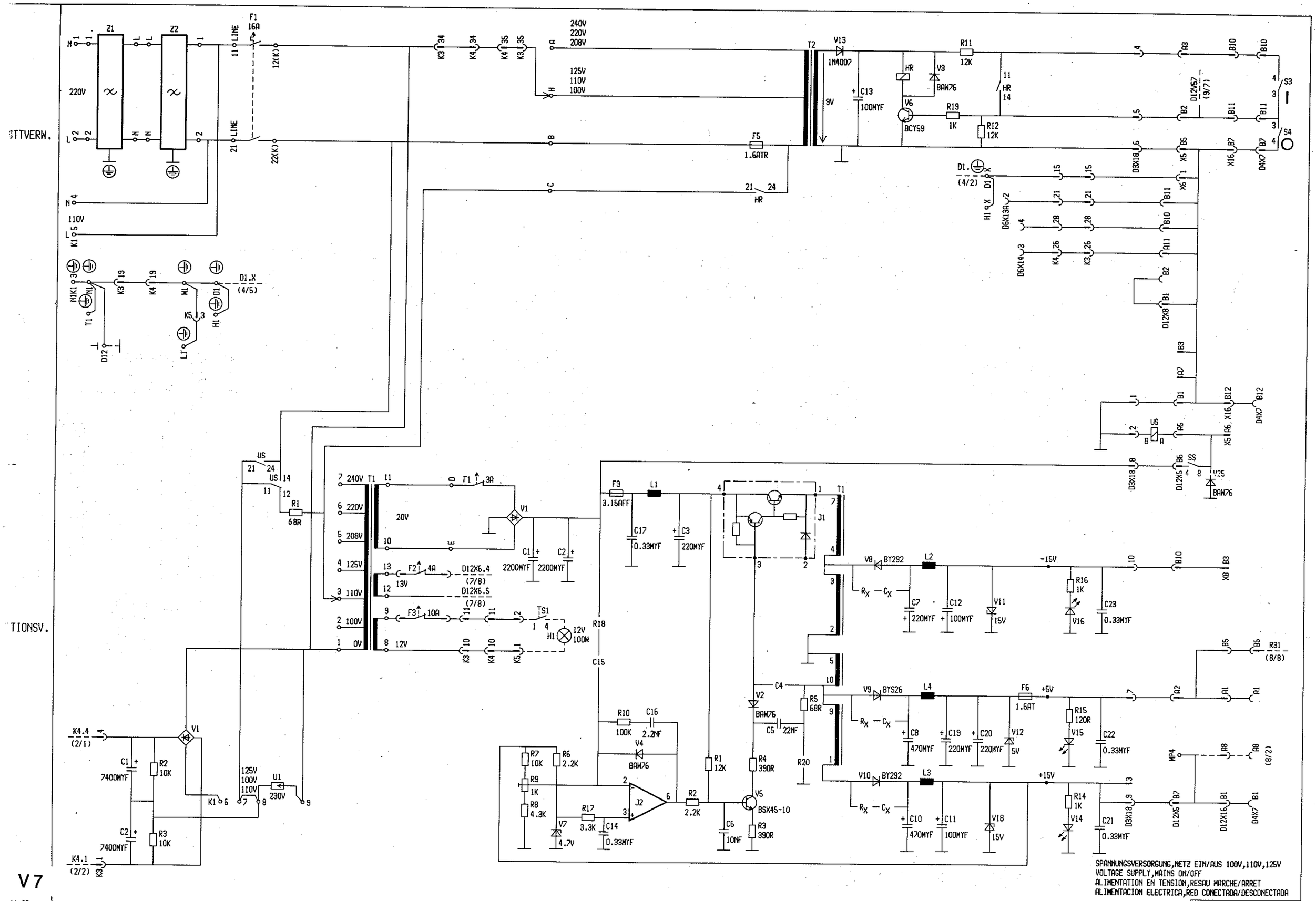
SPANNUNGSVERSORGUNG,NETZ EIN/AUS 100V,110V,125V
VOLTAGE SUPPLY,MAINS ON/OFF
ALIMENTATION EN TENSION,RESAU MARCHE/ARRET
ALIMENTACION ELECTRICA,RED CONECTADA/DESCONECTADA
X1706-4A-1A
V7
.11.85
TTVERW.
TIONSV.
240V
220V
208V
125V
110V
100V
220V
110V
100V
0V
20V
13V
12V
9V
-15V
+5V
+15V
F1 16A
F5 1.6ATR
F1 3A
F2 4A
F3 10A
F3 3.15AFF
F6 1.6AT
T1
T2
V1
V2
V3
V4
V5
V6
V7
V8
V9
V10
V11
V12
V13
V14
V15
V16
V18
V25
J1
J2
U1
US
SS
S3
S4
TS1
H1
R1 68R
R2 10K
R3 10K
R4 390R
R5 68R
R6 2.2K
R7 10K
R8 4.3K
R9 1K
R10 100K
R11 12K
R12 12K
R14 1K
R15 120R
R16 1K
R17 3.3K
R18
R19 1K
R20
R31
C1 2200MYF
C2 2200MYF
C3 220MYF
C4
C5 22NF
C6 10NF
C7 220MYF
C8 470MYF
C10 470MYF
C11 100MYF
C12 100MYF
C13 100MYF
C14 0.33MYF
C15
C16 2.2NF
C17 0.33MYF
C19 220MYF
C20 220MYF
C21 0.33MYF
C22 0.33MYF
C23 0.33MYF
7400MYF
BY292
BYS26
BAW76
BCY59
BSX45-10
1N4007
D12X6.4 (7/8)
D12X6.5 (7/8)
D12V57 (9/7)
D1.X (4/5)
D1. (4/2)
K4.4 (2/1)
K4.1 (2/2)
1 2 3 4 5 6

BLATTVERW.

FUNKTIONSV.

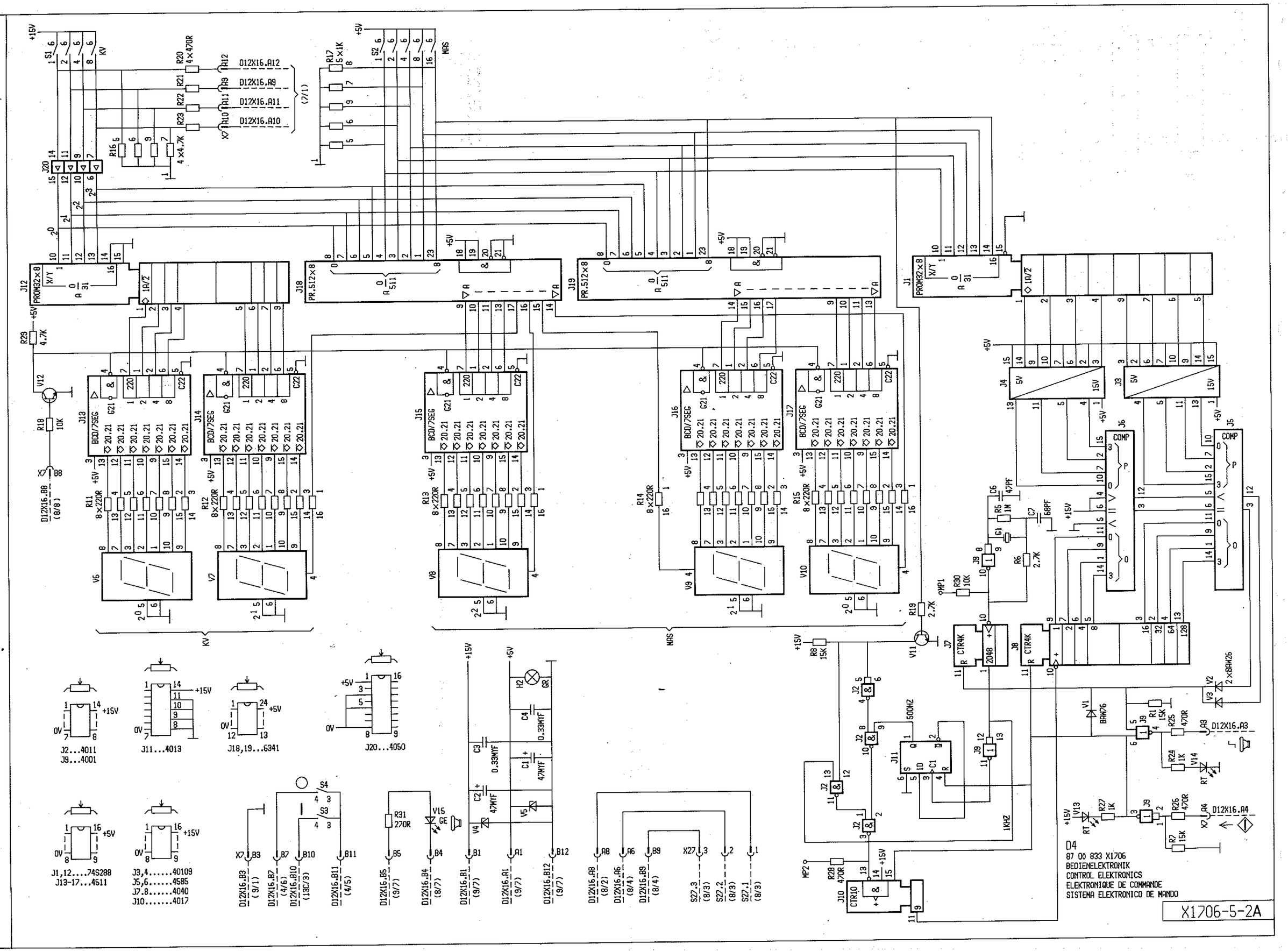

R7

23.09.86

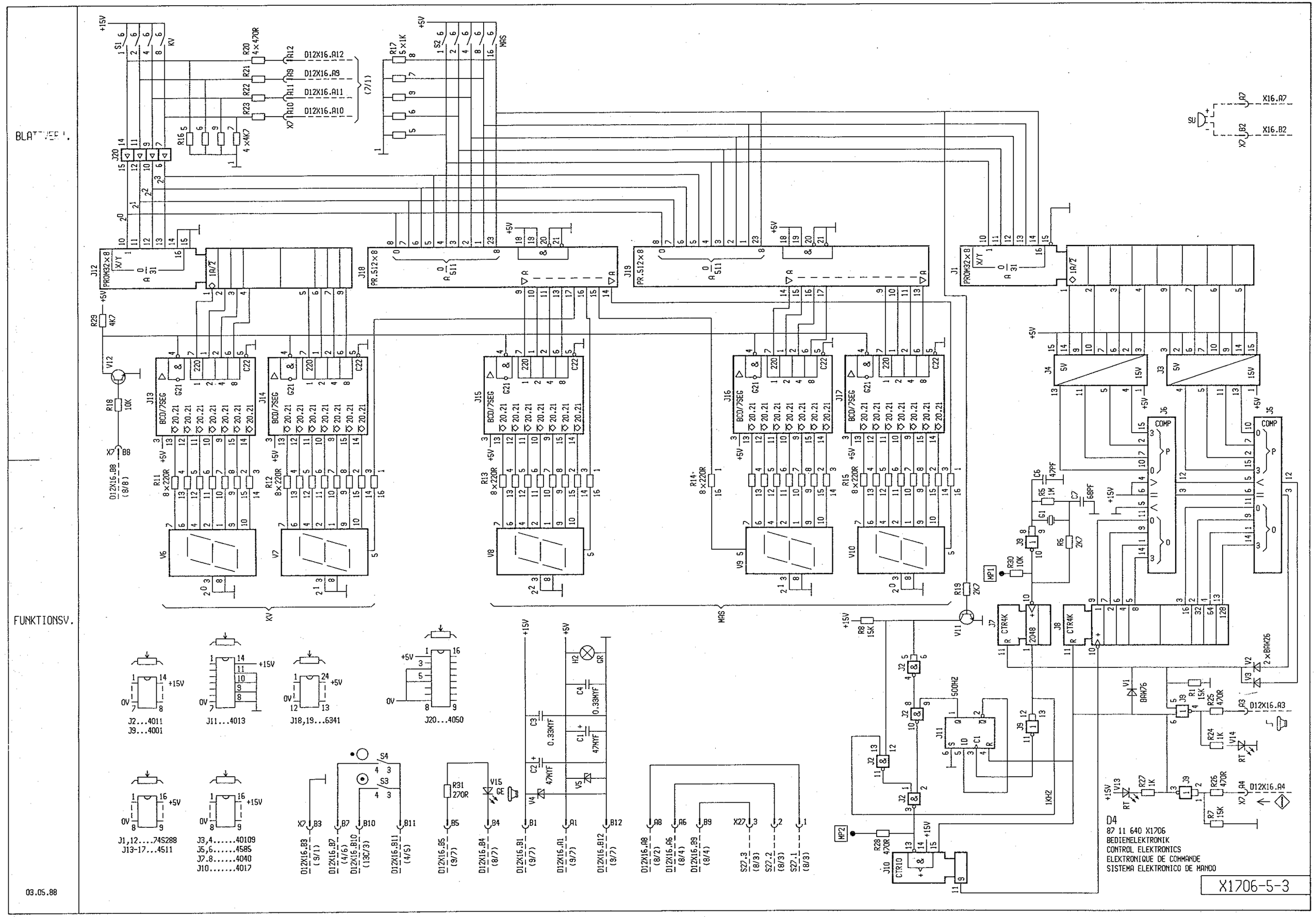
BLATTVERL.
FUNKTIONSV.
03.05.88
D4
87 11 640 X1706
BEDIENELEKTRONIK
CONTROL ELEKTRONICS
ELEKTRONIQUE DE COMMANDE
SISTEMA ELEKTRONICO DE MANDO
X1706-5-3
KV
MAS
J2...4011
J9...4001
J11...4013
J18,19...6341
J20...4050
J1,12....74S288
J13-17...4511
J3,4.....40109
J5,6.....4585
J7,8.....4040
J10.....4017

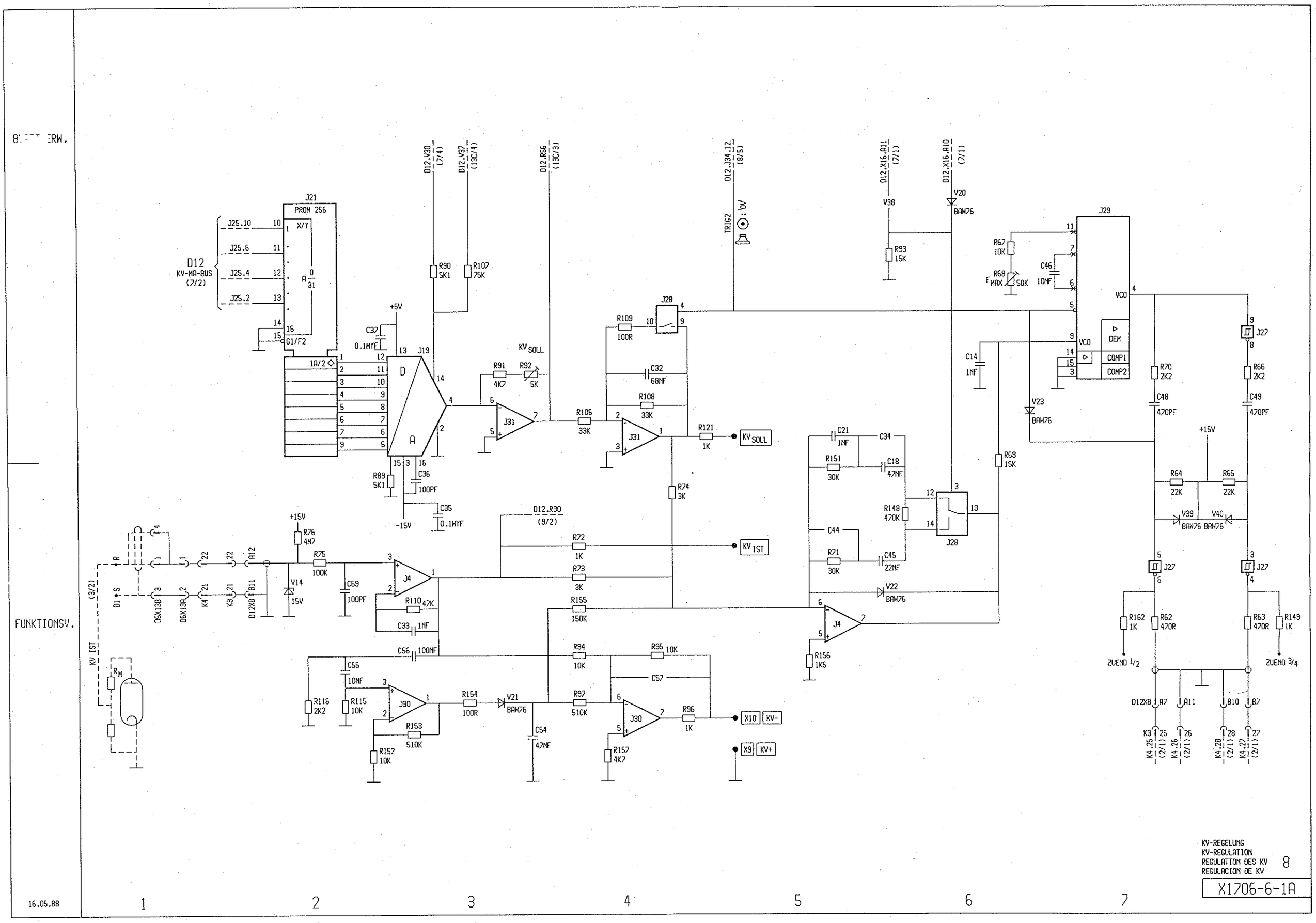
FUNKTIONSV.
16.05.88
J21
PROM 256
D12
KV-MA-BUS
(7/2)
J25.10
J25.6
J25.4
J25.2
G1/F2
1A/2
J19
D
A
+5V
C37
0.1MYF
R89
5K1
C36
100PF
C35
0.1MYF
-15V
R90
5K1
R107
75K
D12.V30
(7/4)
D12.V37
(13C/4)
D12.R56
(13C/3)
KV SOLL
R91
4K7
R92
5K
J31
R106
33K
R109
100R
J28
C32
68NF
R108
33K
R121
1K
R74
3K
TRIG2
D12.J34.12
(8/5)
D12.X16.A11
(7/1)
D12.X16.A10
(7/1)
V38
R93
15K
V20
BAW76
R67
10K
R68
F MAX
50K
C46
10NF
J29
VCO
DEM
COMP1
COMP2
C14
1NF
V23
BAW76
R69
15K
R70
2K2
C48
470PF
R66
2K2
C49
470PF
J27
+15V
R64
22K
R65
22K
V39
V40
BAW76
C21
1NF
C34
R151
30K
C18
47NF
R148
470K
C44
R71
30K
C45
22NF
V22
BAW76
R156
1K5
R72
1K
R73
3K
R155
150K
KV IST
D12.R30
(9/2)
+15V
R76
4M7
R75
100K
C69
100PF
V14
15V
J4
R110
47K
C33
1NF
C56
100NF
R94
10K
R95
10K
C57
R97
510K
R96
1K
X10
KV-
X9
KV+
R157
4K7
C55
10NF
R116
2K2
R115
10K
J30
R154
100R
V21
BAW76
R153
510K
R152
10K
C54
47NF
R162
1K
R62
470R
R63
470R
R149
1K
ZUEND 1/2
ZUEND 3/4
D12X8
A7
A11
B10
B7
K3
K4.25
K4.26
K4.28
K4.22
(2/1)
D6X13B
D6X13A
K4
K3
D12X8
B11
A12
D1
S
R
(3/2)
KV IST
RM
KV-REGELUNG
KV-REGULATION
REGULATION DES KV
REGULACION DE KV
8
X1706-6-1A
1
2
3
4
5
6
7

BLATTVERW.

UNKTIONSV.

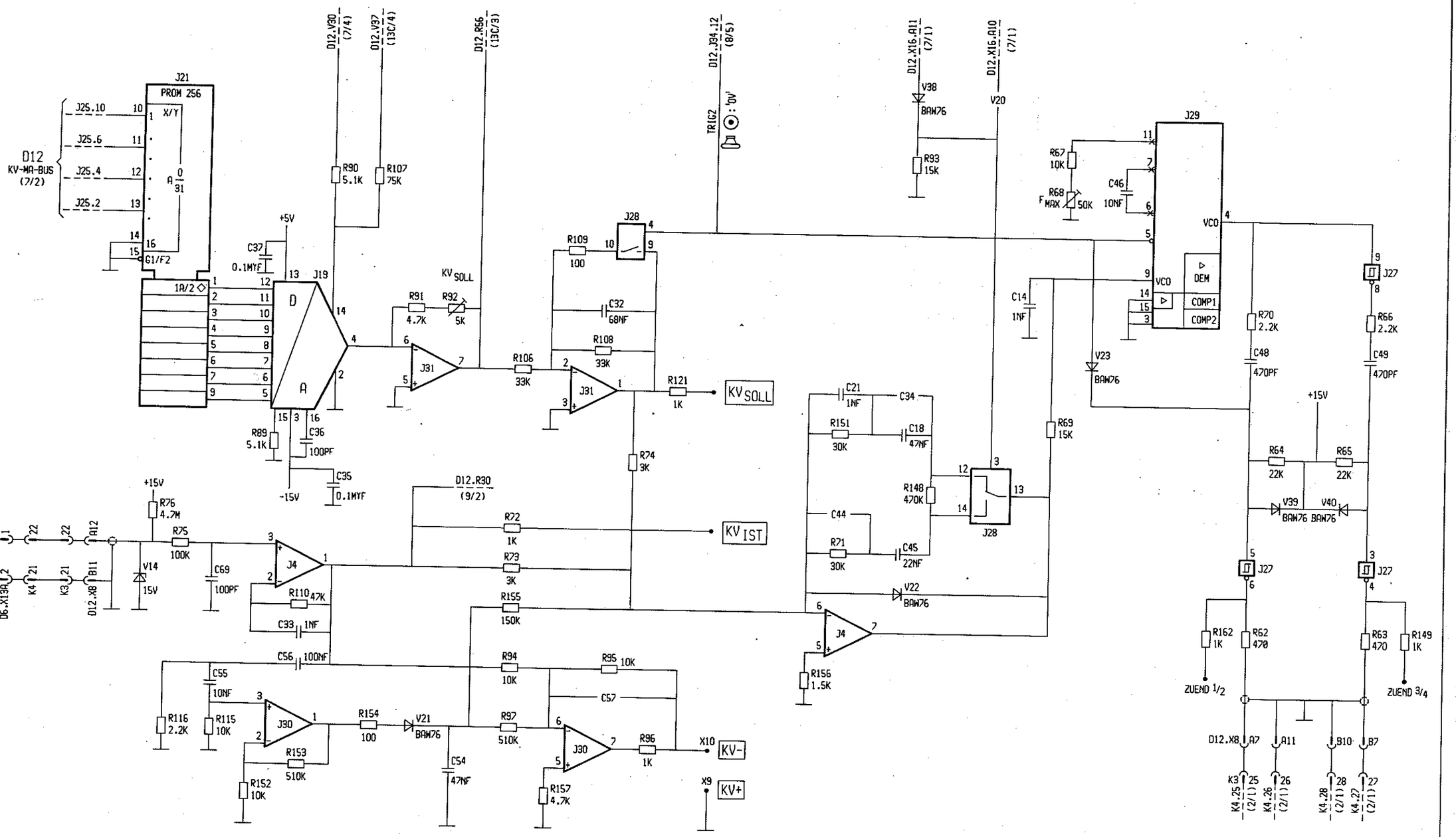

V8

23.02.85

KV-REGELUNG
KV-REGULATION
REGULATION DES KV
REGULACION DE KV

8

X1706-6-1

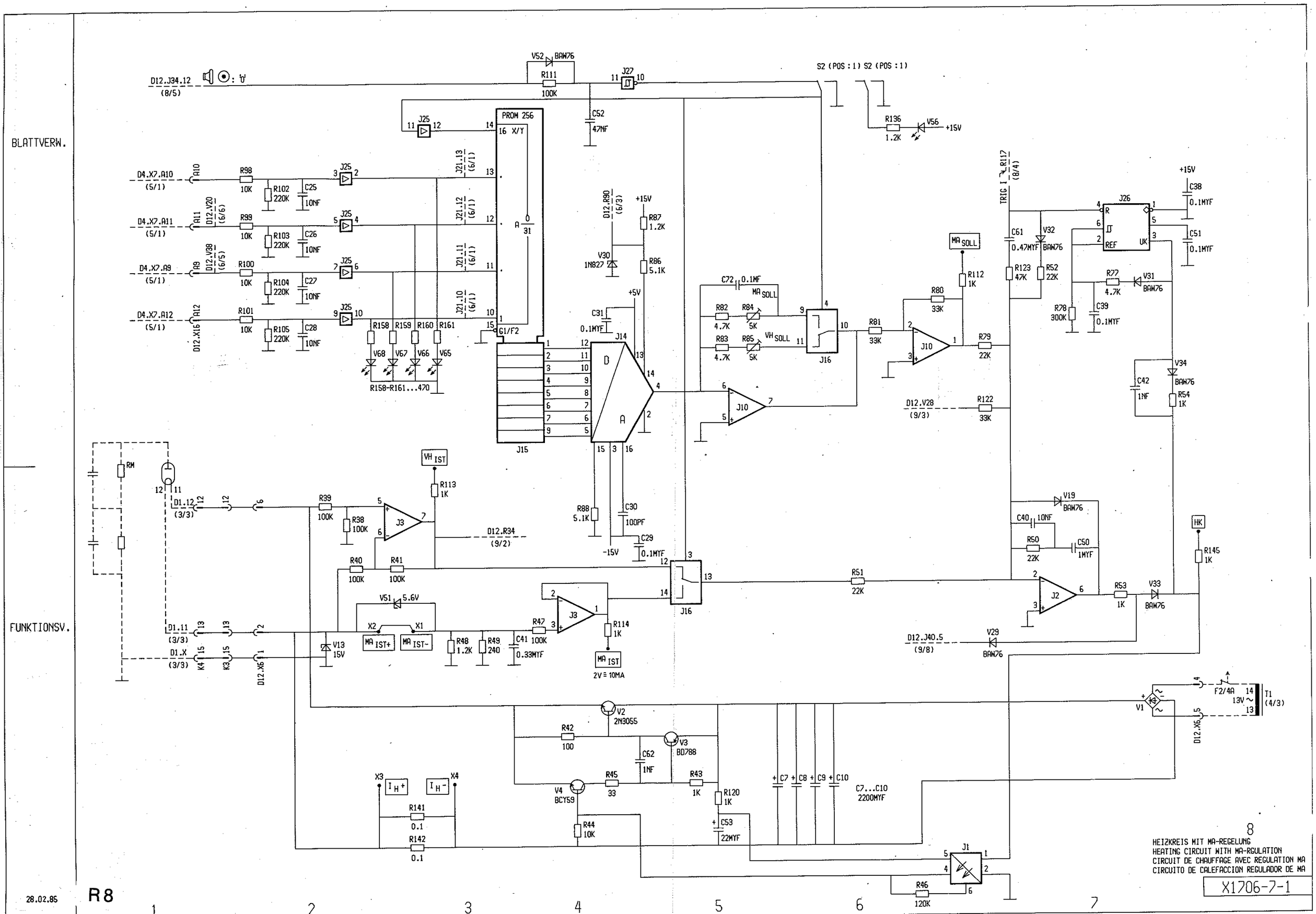
BLATTVERW.
FUNKTIONSV.
D12.J34.12
(8/5)
V52 BAW76
R111
100K
J27
C52
47NF
S2 (POS:1) S2 (POS:1)
R136
1.2K
V56
+15V
PROM 256
16 X/Y
G1/F2
J15
J25
D4.X7.A10
(5/1)
D4.X7.A11
(5/1)
D4.X7.A9
(5/1)
D4.X7.A12
(5/1)
R98
R99
R100
R101
10K
R102
R103
R104
R105
220K
C25
C26
C27
C28
10NF
R158
R159
R160
R161
V68
V67
V66
V65
R158-R161...470
J21.13 (6/1)
J21.12 (6/1)
J21.11 (6/1)
J21.10 (6/1)
D12.R90 (6/3)
V30
1N827
R87
1.2K
R86
5.1K
C31
0.1MYF
J14
C72
0.1MF
MA SOLL
VH SOLL
R82
4.7K
R84
5K
R83
4.7K
R85
5K
J16
J10
R80
33K
R81
33K
R112
1K
R79
22K
D12.V28
(9/3)
R122
33K
TRIG I
R117
(8/4)
C61
0.47MYF
V32
BAW76
R123
47K
R52
22K
J26
C38
0.1MYF
C51
0.1MYF
R77
4.7K
V31
BAW76
R78
300K
C39
0.1MYF
C42
1NF
V34
BAW76
R54
1K
RM
D1.12
(3/3)
D1.11
(3/3)
D1.X
(3/3)
D12.X6
R39
100K
R38
100K
J3
VH IST
R113
1K
D12.R34
(9/2)
R88
5.1K
C30
100PF
C29
0.1MYF
-15V
R40
100K
R41
100K
V51
5.6V
X2
X1
MA IST+
MA IST-
V13
15V
R48
1.2K
R49
240
C41
0.33MYF
R47
100K
R114
1K
MA IST
2V ≙ 10MA
V19
BAW76
C40
10NF
R50
22K
C50
1MYF
HK
R145
1K
R51
22K
J2
R53
1K
V33
BAW76
D12.J40.5
(9/8)
V29
BAW76
V2
2N3055
R42
100
C62
1NF
V3
BD788
R45
33
R43
1K
V4
BCY59
R44
10K
R120
1K
C53
22MYF
C7 C8 C9 C10
C7...C10
2200MYF
X3
X4
I H+
I H-
R141
0.1
R142
0.1
J1
R46
120K
V1
F2/4A
T1
(4/3)
13V
D12.X6
HEIZKREIS MIT MA-REGELUNG
HEATING CIRCUIT WITH MA-RGULATION
CIRCUIT DE CHAUFFAGE AVEC REGULATION MA
CIRCUITO DE CALEFACCION REGULADOR DE MA
8
X1706-7-1
28.02.85
R8
1
2
3
4
5
6
7

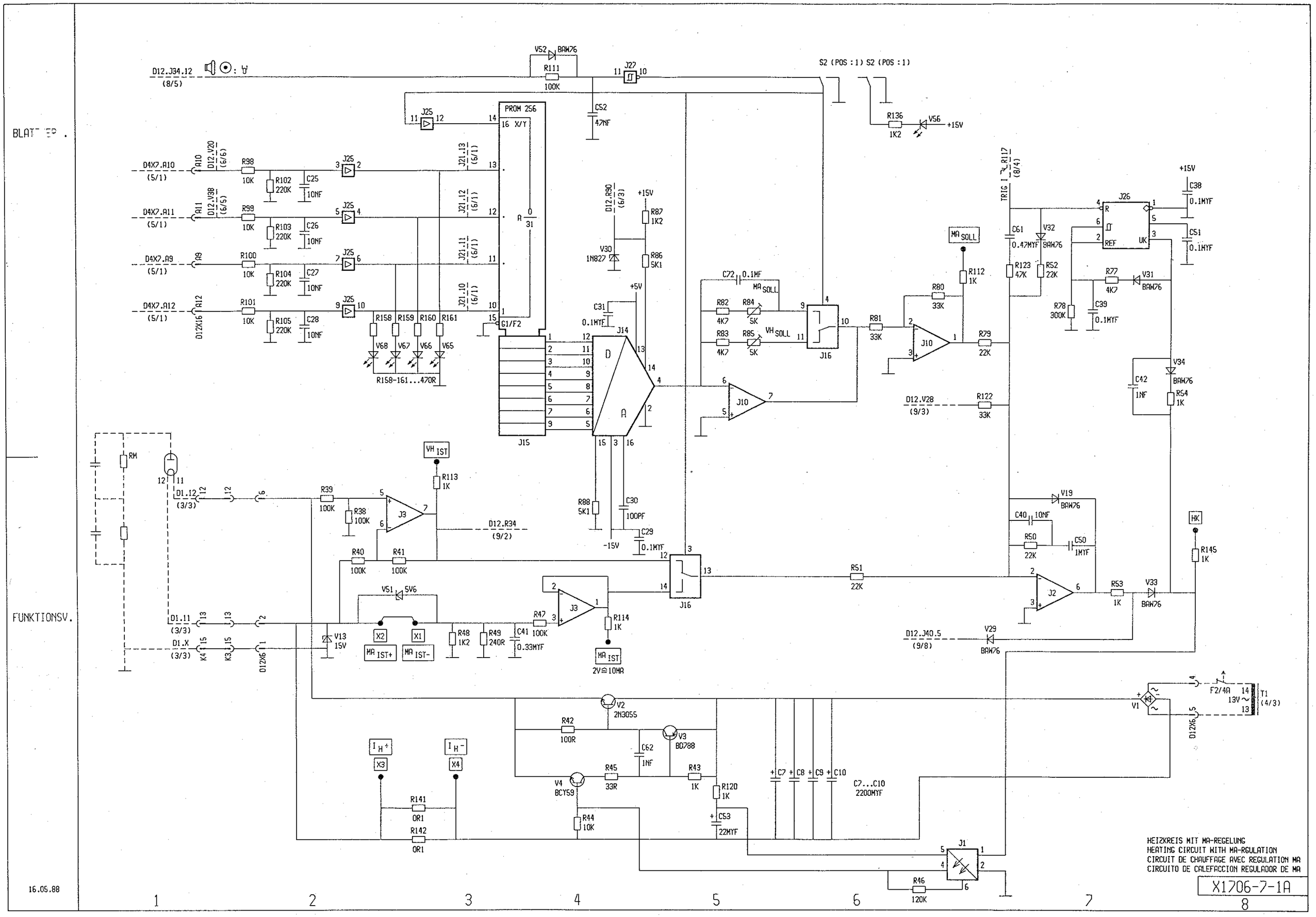
BLATT EP .
FUNKTIONSV.
16.05.88
D12.J34.12
(8/5)
V52 BAW76
R111 100K
J27
C52 47NF
S2 (POS :1) S2 (POS :1)
R136 1K2
V56
+15V
PROM 256
16 X/Y
A 0 31
G1/F2
J15
D4X7.A10
(5/1)
D4X7.A11
(5/1)
D4X7.A9
(5/1)
D4X7.A12
(5/1)
D12X16
R98 10K
R99 10K
R100 10K
R101 10K
R102 220K
R103 220K
R104 220K
R105 220K
C25 10NF
C26 10NF
C27 10NF
C28 10NF
J25
J21.13 (6/1)
J21.12 (6/1)
J21.11 (6/1)
J21.10 (6/1)
R158 R159 R160 R161
V68 V67 V66 V65
R158-161...470R
D12.R90 (6/3)
V30 1N827
R87 1K2
R86 5K1
C31 0.1MYF
J14
R88 5K1
C30 100PF
C29 0.1MYF
-15V
C72 0.1MF
MA SOLL
R82 4K7
R84 5K
R83 4K7
R85 5K
VH SOLL
J16
J10
R80 33K
R81 33K
R112 1K
R79 22K
D12.V28
(9/3)
R122 33K
TRIG I R117
(8/4)
C61 0.47MYF
V32 BAW76
R123 47K
R52 22K
J26
C38 0.1MYF
C51 0.1MYF
R77 4K7
V31 BAW76
R78 300K
C39 0.1MYF
C42 1NF
V34 BAW76
R54 1K
RM
D1.12
(3/3)
R39 100K
R38 100K
J3
VH IST
R113 1K
D12.R34
(9/2)
R40 100K
R41 100K
V51 5V6
X2
X1
MA IST+
MA IST-
V13 15V
R48 1K2
R49 240R
C41 0.33MYF
R47 100K
R114 1K
MA IST
2V≙10MA
D1.11
(3/3)
D1.X
(3/3)
D12X6
V19 BAW76
C40 10NF
R50 22K
C50 1MYF
HK
R145 1K
R51 22K
J2
R53 1K
V33 BAW76
D12.J40.5
(9/8)
V29 BAW76
V1
F2/4A
T1
13V
(4/3)
D12X6
V2 2N3055
R42 100R
V3 BD788
C62 1NF
V4 BCY59
R45 33R
R43 1K
R120 1K
C53 22MYF
R44 10K
C7 C8 C9 C10
C7...C10
2200MYF
I H+
X3
I H-
X4
R141 0R1
R142 0R1
J1
R46 120K
HEIZKREIS MIT MA-REGELUNG
HEATING CIRCUIT WITH MA-RGULATION
CIRCUIT DE CHAUFFAGE AVEC REGULATION MA
CIRCUITO DE CALEFACCION REGULADOR DE MA
X1706-7-1A
1
2
3
4
5
6
7
8

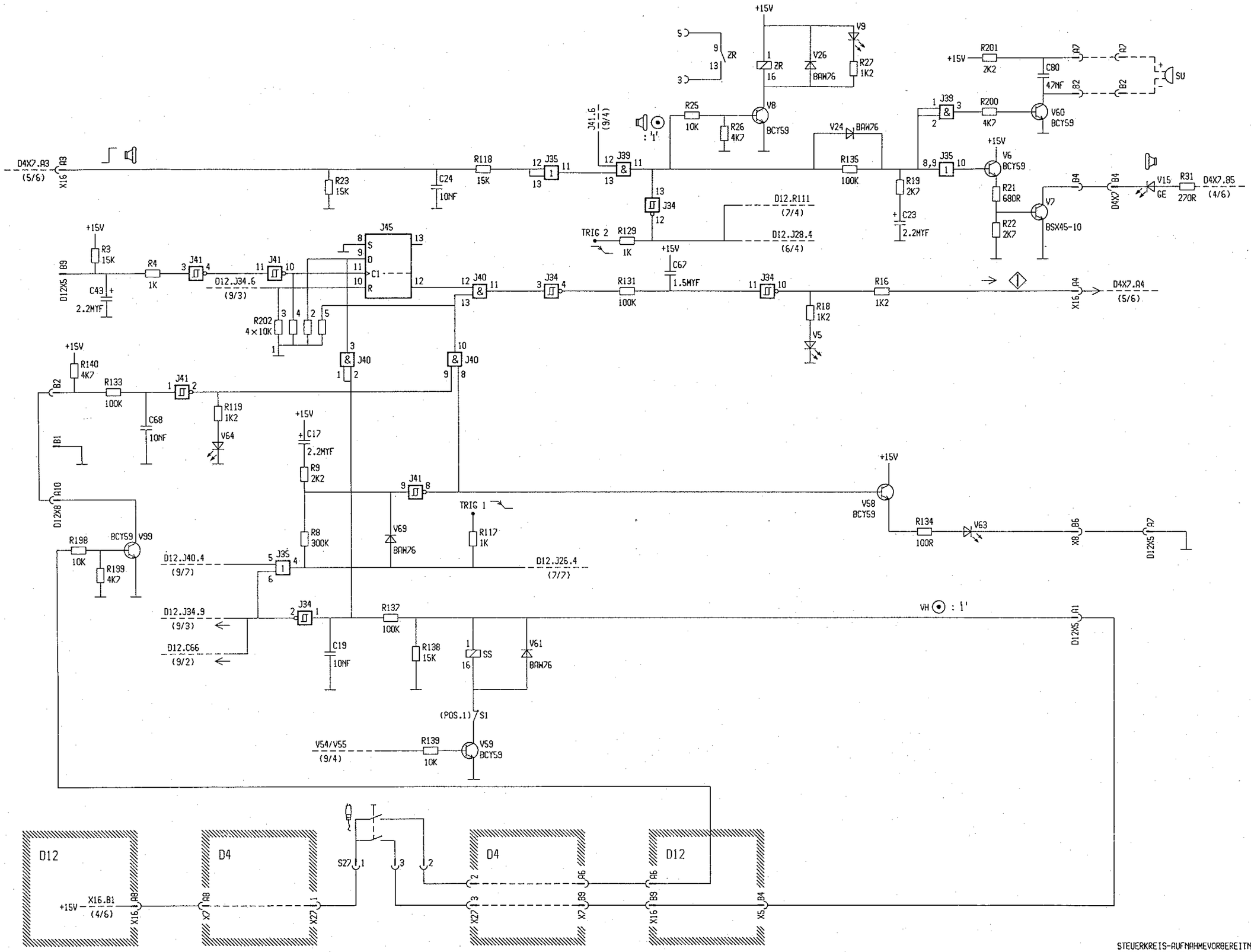

BL[illegible]RW.

FUNKTIONSV.

06.05.88

STEUERKREIS-AUFNAHMEVORBEREITNUG
CONTROL CIRCUIT-EXPOSURE PREPARATION
CIRCUIT DE COMMANDE PREPARATION DE GRAPHIE
CIRCUITO DE CONTROL-PREPARACION DE LA RADIOGRAFIA

X1706-8-3

1 2 3 4 5 6 7 8

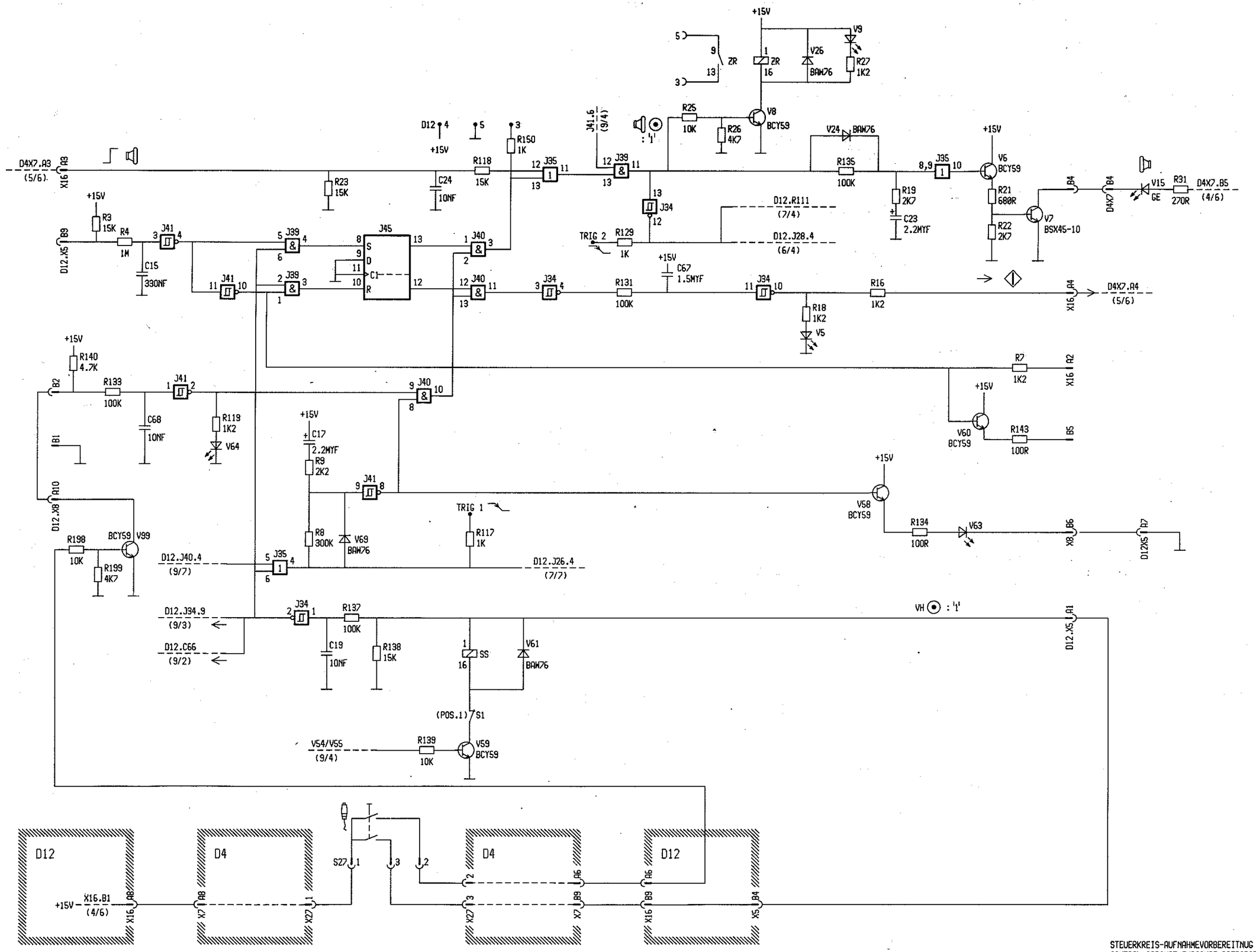

STEUERKREIS-AUFNAHMEVORBEREITNUG
CONTROL CIRCUIT-EXPOSURE PREPARATION
CIRCUIT DE COMMANDE PREPARATION DE GRAPHIE
CIRCUITO DE CONTROL-PREPARACION DE LA RADIOGRAFIA

X1706-8-2

V9

24.09.86

1 2 3 4 5 6 7 8

BLATTVERW.

FUNKTIONSV.

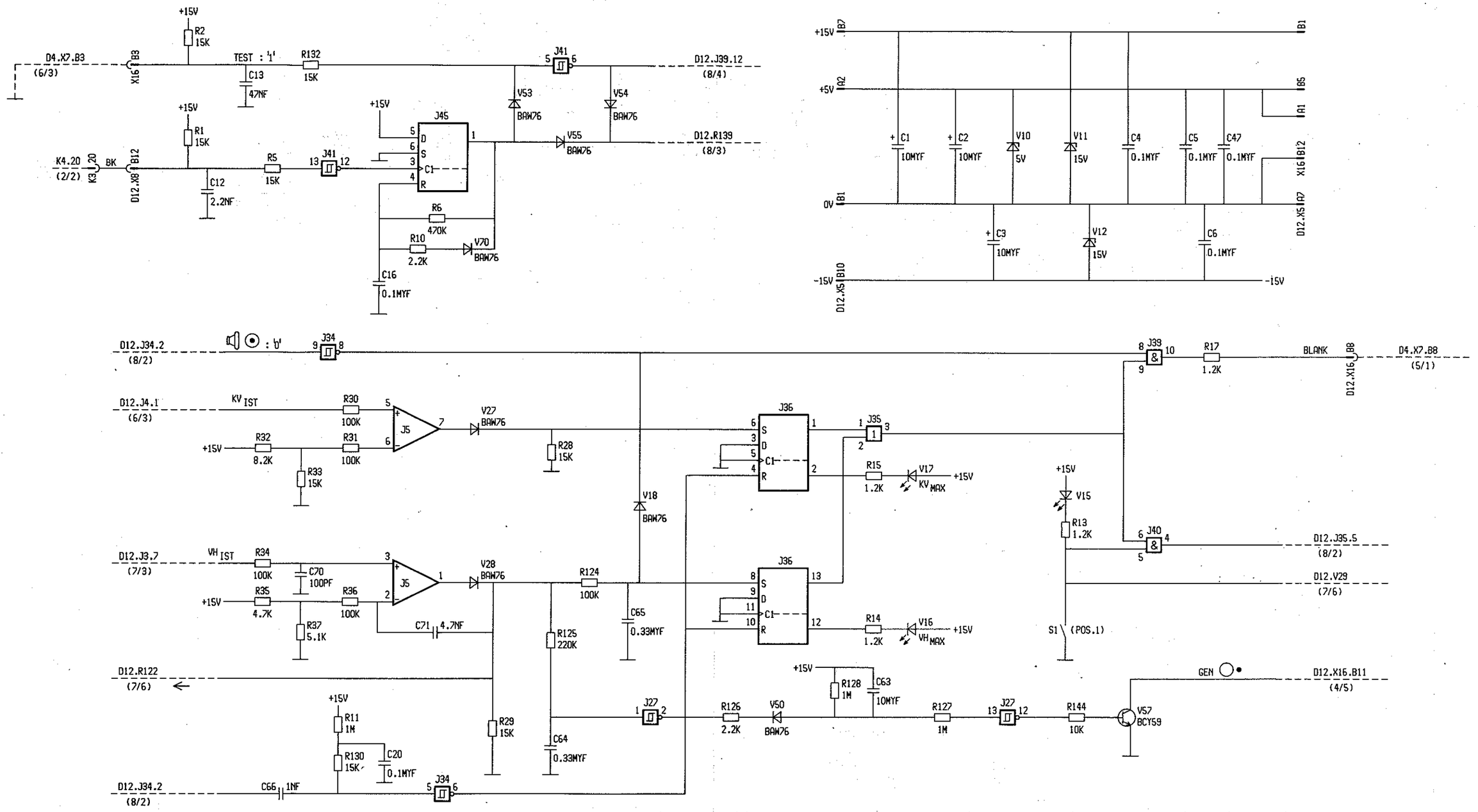

R9

23.01.85

KV-MA BK-UEBERWACHUNG
KV-MA BK-MONITORING
SURVEILLANCE KV-MA COURT-CIRCUIT DE PONT
CELADOR DE KV-MA CORTOCIRCUITOS EN PUENTE

X1706-9-1

1 2 3 4 5 6 7

BLATT ER .

FUNKTIONSV.

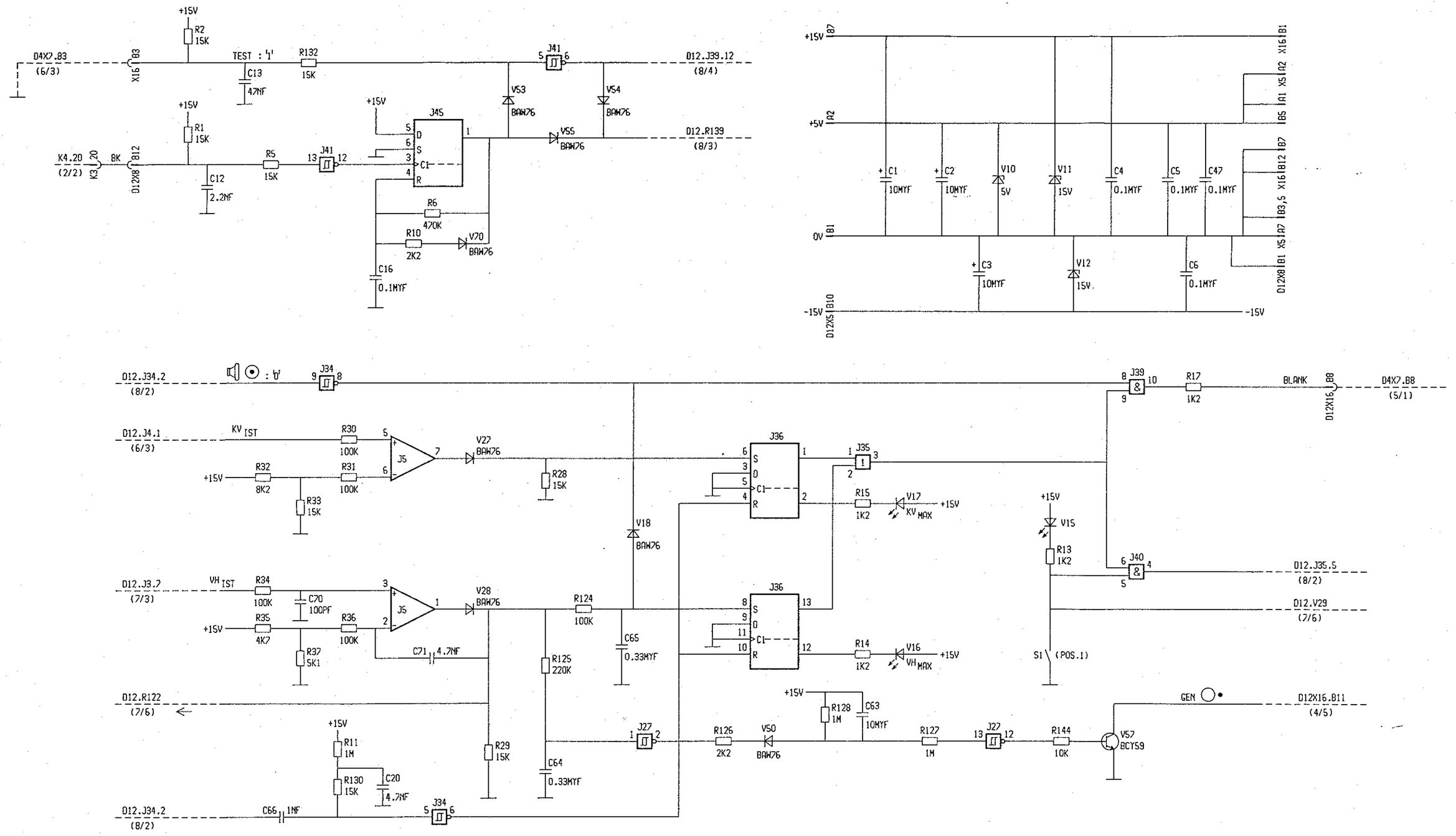

KV-MA BK-UEBERWACHUNG
KV-MA BK-MONITORING
SURVEILLANCE KV-MA COURT-CIRCUIT DE PONT
CELADOR DE KV-MA CORTOCIRCUITOS EN PUENTE

X1706-9-2

02.05.88

1 2 3 4 5 6 7

TTVERW.

KTIONSV.

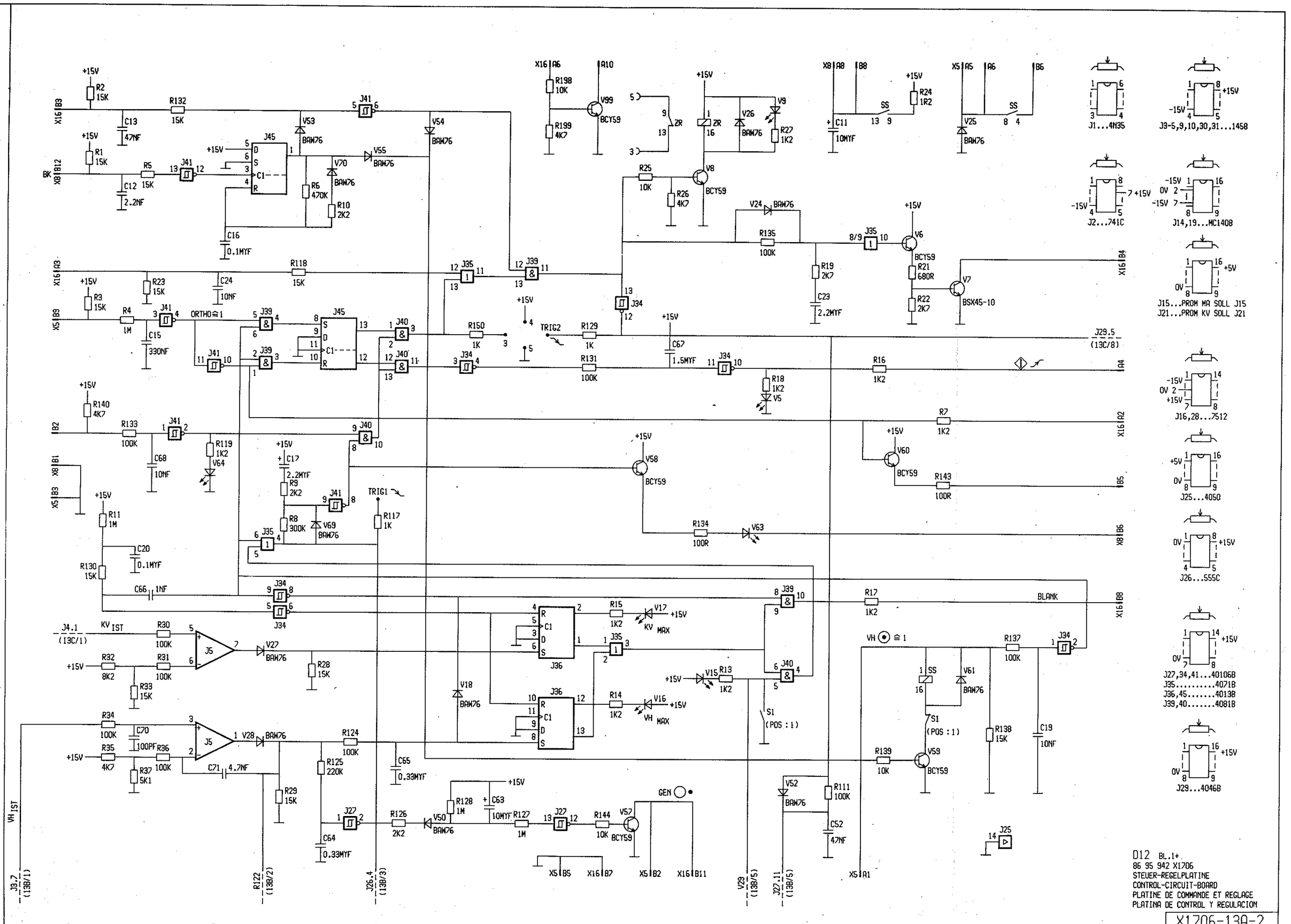

V 12

24.09.86

BLATTVERW.

FUNKTIONSV.

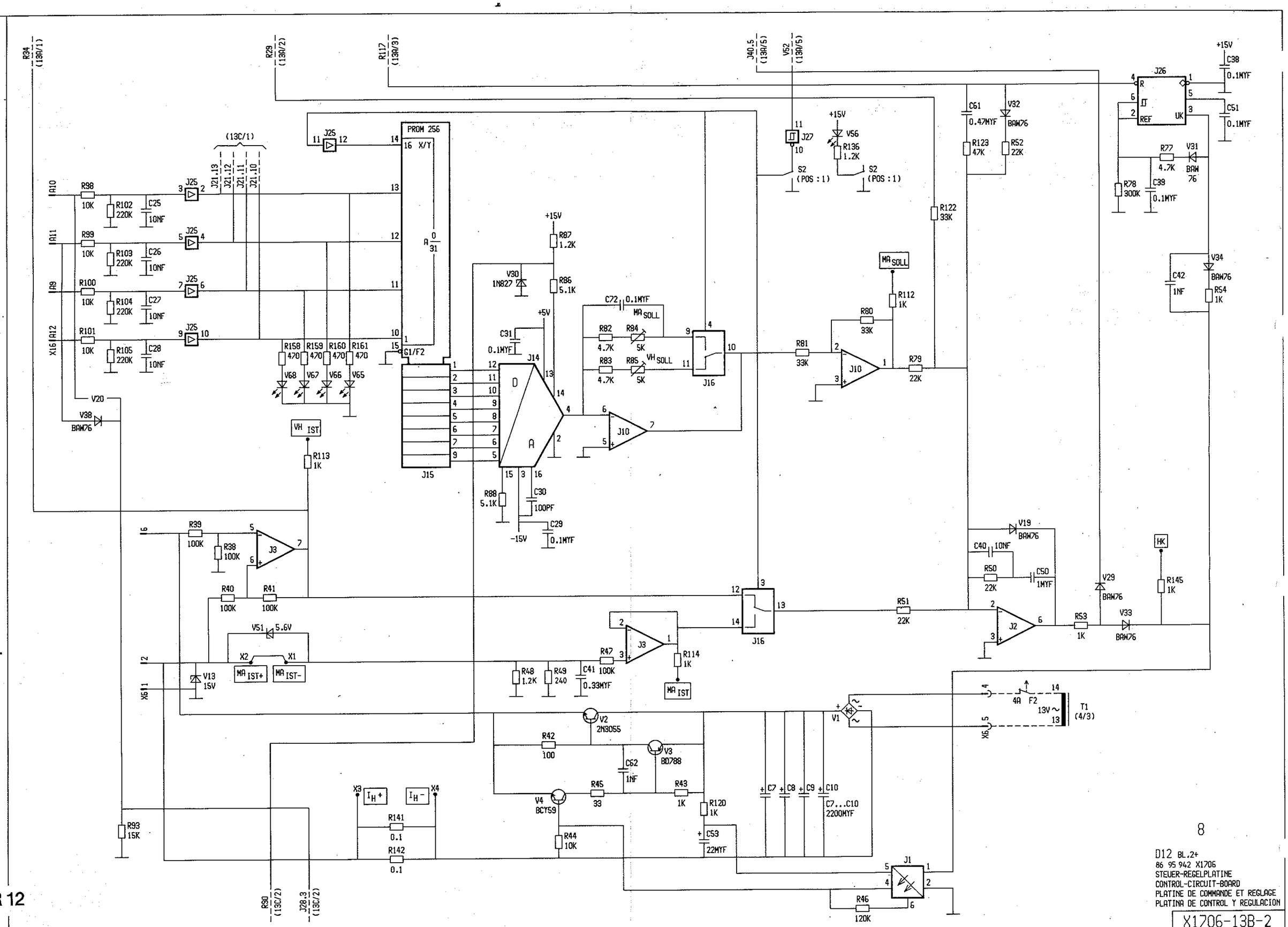

R 12

22.01.85

8

D12 BL.2+
86 95 942 X1706
STEUER-REGELPLATINE
CONTROL-CIRCUIT-BOARD
PLATINE DE COMMANDE ET REGLAGE
PLATINA DE CONTROL Y REGULACION

X1706-13B-2

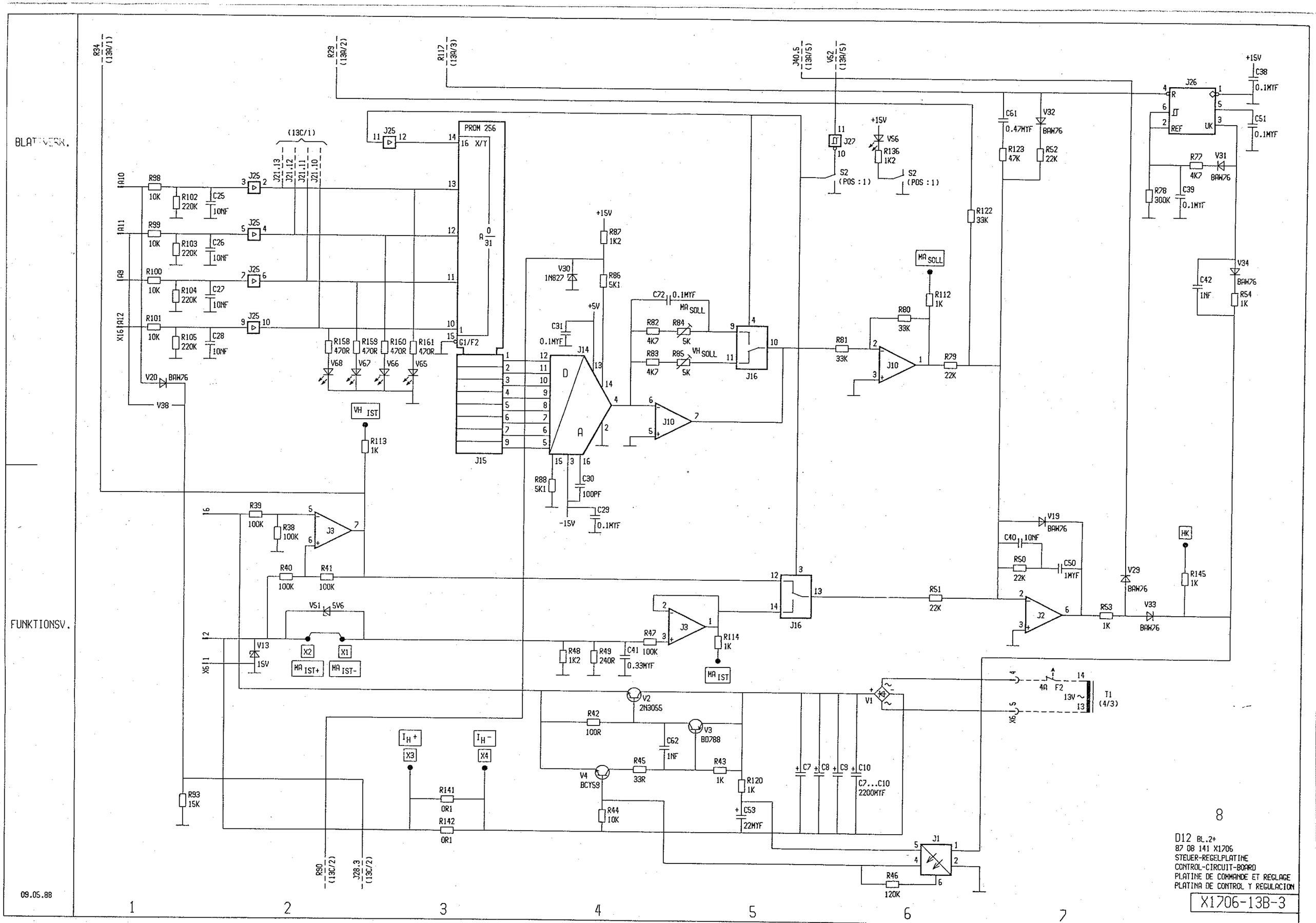
BLATTVERK.
FUNKTIONSV.
09.05.88
PROM 256
X/Y
G1/F2
J15
J14
J16
J26
J27
J25
J10
J3
J2
J1
V1
V2
2N3055
V3
BD788
V4
BCY59
T1
(4/3)
F2
4A
13V ~
MA SOLL
VH SOLL
MA IST
VH IST
MA IST+
MA IST-
HK
S2
(POS : 1)
+15V
-15V
+5V
C7...C10
2200MYF
D12 BL.2+
87 08 141 X1706
STEUER-REGELPLATINE
CONTROL-CIRCUIT-BOARD
PLATINE DE COMMANDE ET REGLAGE
PLATINA DE CONTROL Y REGULACION
8
X1706-13B-3

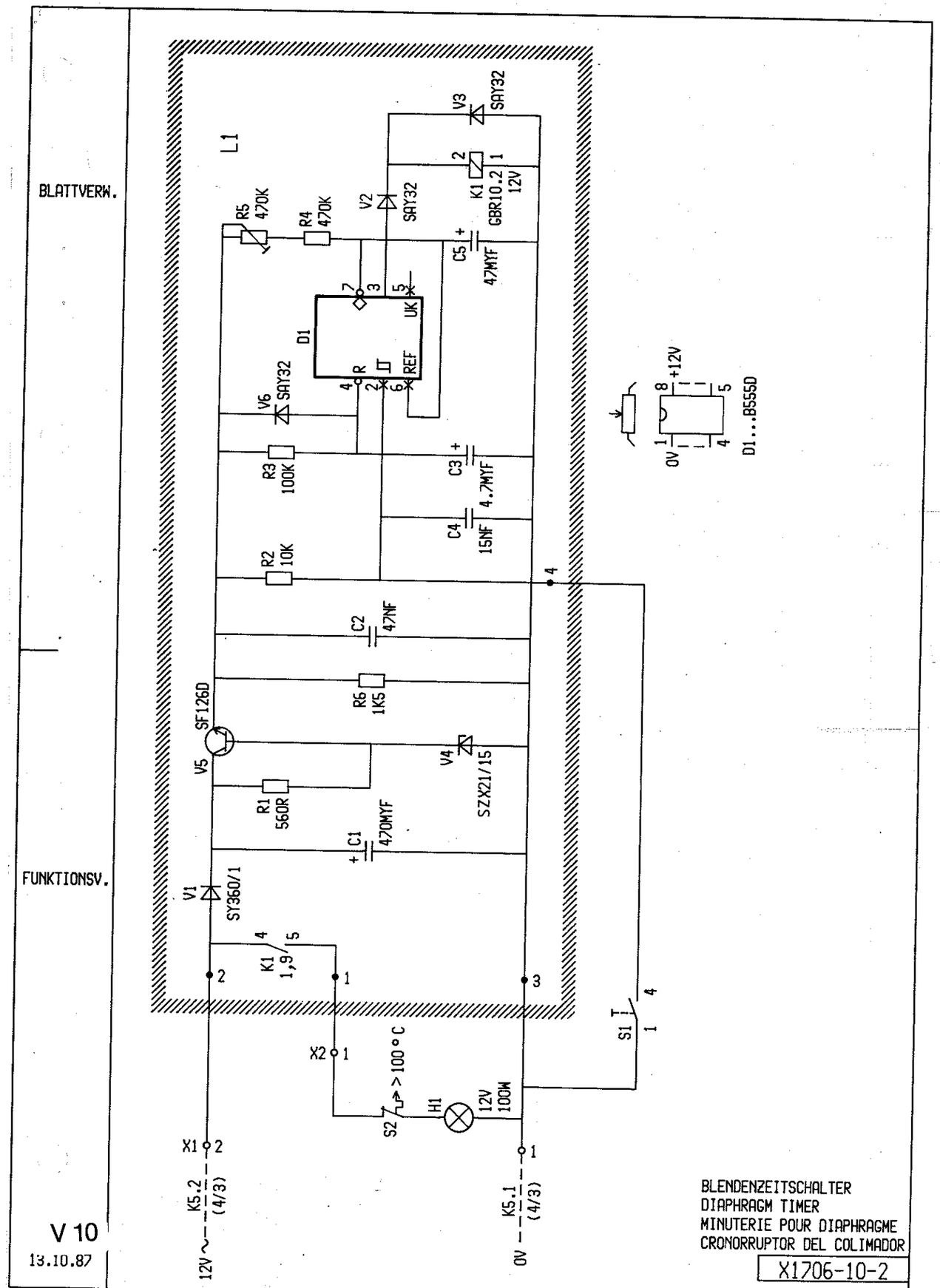
BLATTVERW.
FUNKTIONSV.
L1
R5 470K
R4 470K
V2 SAY32
V3 SAY32
K1 GBR10.2 12V
C5 47MYF
D1
UK
REF
V6 SAY32
R3 100K
C3 4.7MYF
C4 15NF
R2 10K
C2 47NF
R6 1K5
SF126D
V5
V4 SZX21/15
R1 560R
C1 470MYF
V1 SY360/1
K1 1,9
X2
S2 > 100 °C
H1 12V 100W
S1
X1
12V ~ K5.2 (4/3)
0V K5.1 (4/3)
+12V
0V
D1...B555D
V 10
13.10.87
BLENDENZEITSCHALTER
DIAPHRAGM TIMER
MINUTERIE POUR DIAPHRAGME
CRONORRUPTOR DEL COLIMADOR
X1706-10-2

BLATTVERW.

US : V23009-A1007-A100-24V-

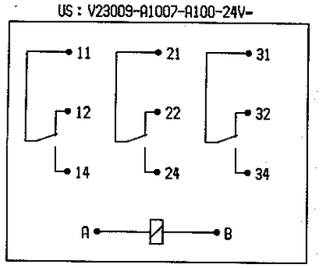

N1	US
A — B	(4/6)
11 — 12 / 14	(4/2)
21 — 22 / 24	(4/2)
31 — 32 / 34	

SS,ZR : D2-12V

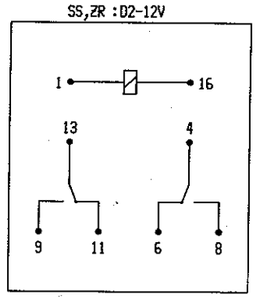

N1	D12 SS	D12 ZR
1 — 16	(8/3)	(8/5)
4 — 6 / 8	(4/6)	(13C/1)
13 — 11 / 9	(2/1)	(8/5)

HR : V23037-A 1002-A101-12V-

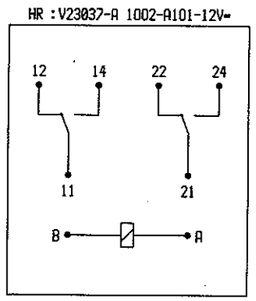

N1	D3 HR
A — B	(4/4)
11 — 12 / 14	(4/5)
21 — 22 / 24	(4/3)

FUNKTIONSV.

H1.S1
(2/2)

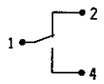

D12.S1 (8/3)
D12.S2 (7/6)

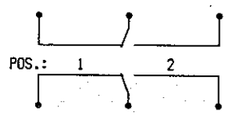

R 10

06.08.85

RELAIS-, SCHALTERUEBERSICHT
RELAY-, SWITCH OVERVIEW
VUE D ENSEMBLE DES RELAY, INTERRUPTEUR
RELACION DE RELES, INTERRUPTOR

X1706-11-1

BLATTVERW.

FUNKTIONSV.

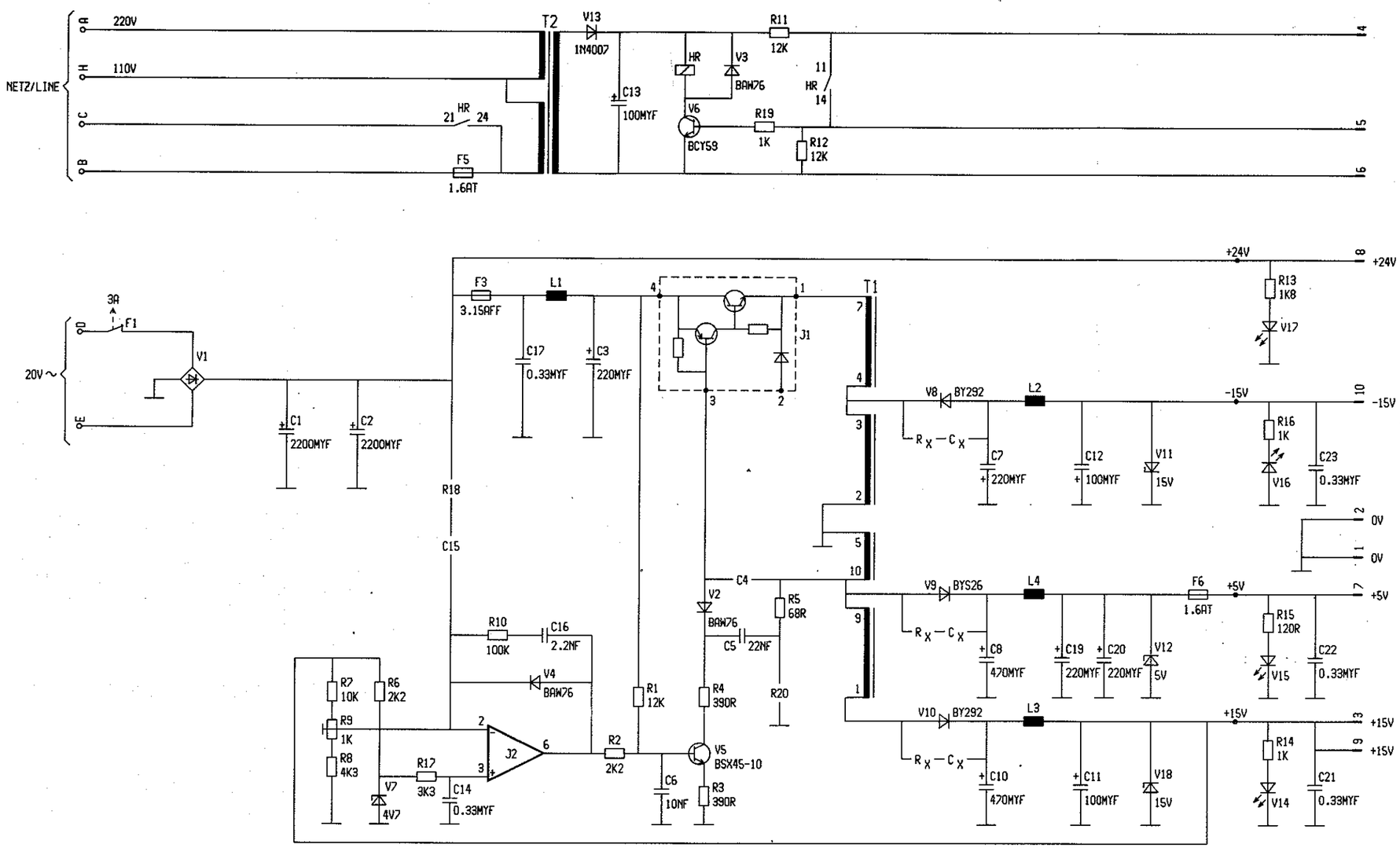

D3
84 63 424 X1558
SCHALTNETZTEIL
SWITCHED MODE POWER SUPPLY
BLOC D ALIMENTATION COMMUTABLE
FUENTE DE ALIMENTACION COMMUTABLE

X1558-13-3

V 11

28.11.85

BLATTVERW.

FUNKTIONSV.

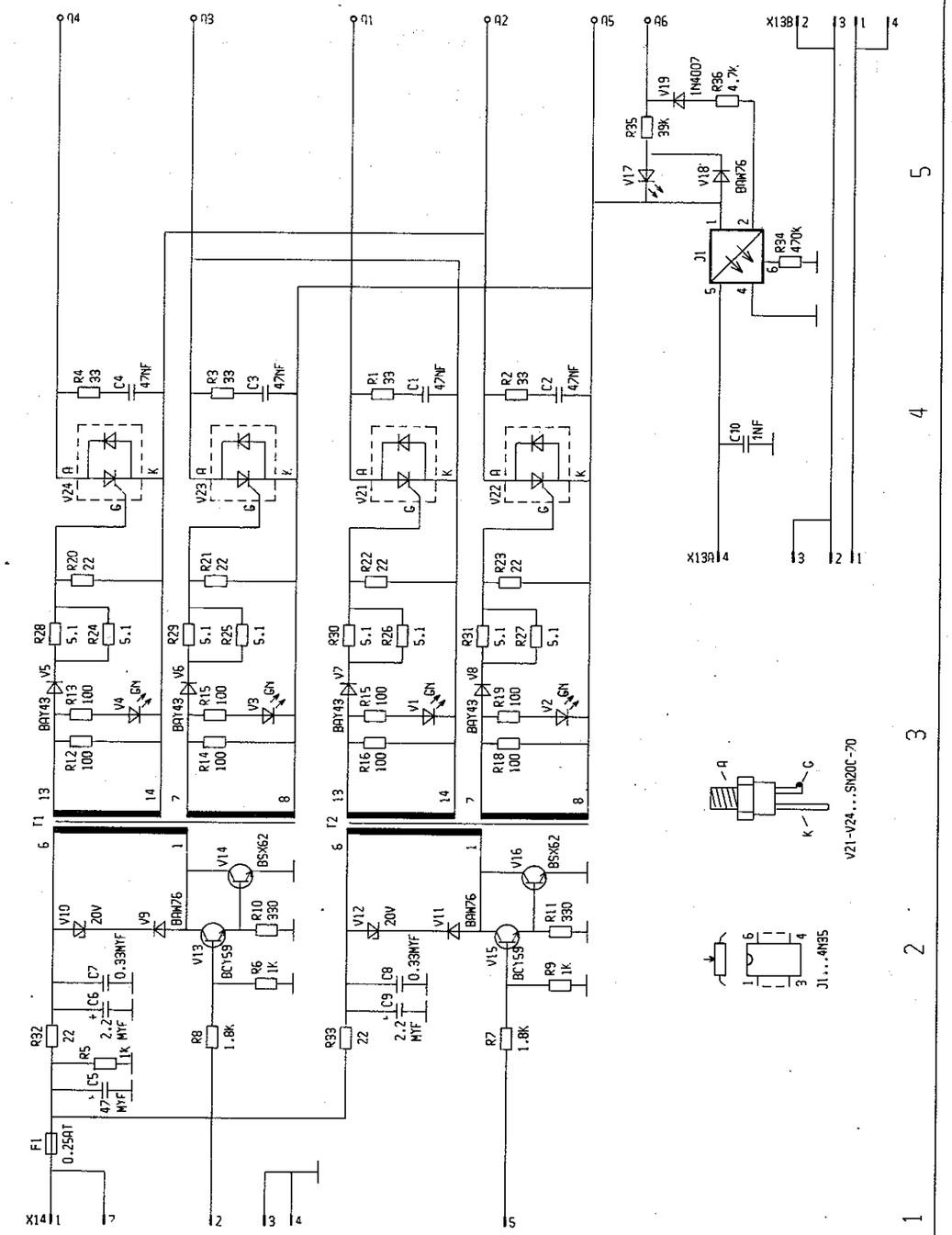

D6
74 69 810 X1558
WECHSELRICHTER/ZUENDSTUFE/BK-ERFASSUNG
INVERTED CONVERTER/IGNITION STAGE/BK-ACQUISITION
INVERSEUR/ETAGES D AMORCAGE/ACQUISITION COURT-CIRCUIT DE PONT
CONVERTIDOR CONTINUA-ALTERNA/PASOS DE ENCENDIDO/DETERMINACION DE CORTOCIRUCUITOS EN PUENTE

12.04.83

R 11

X1558-15-1A

BLATTVERW.

FUNKTIONSV.

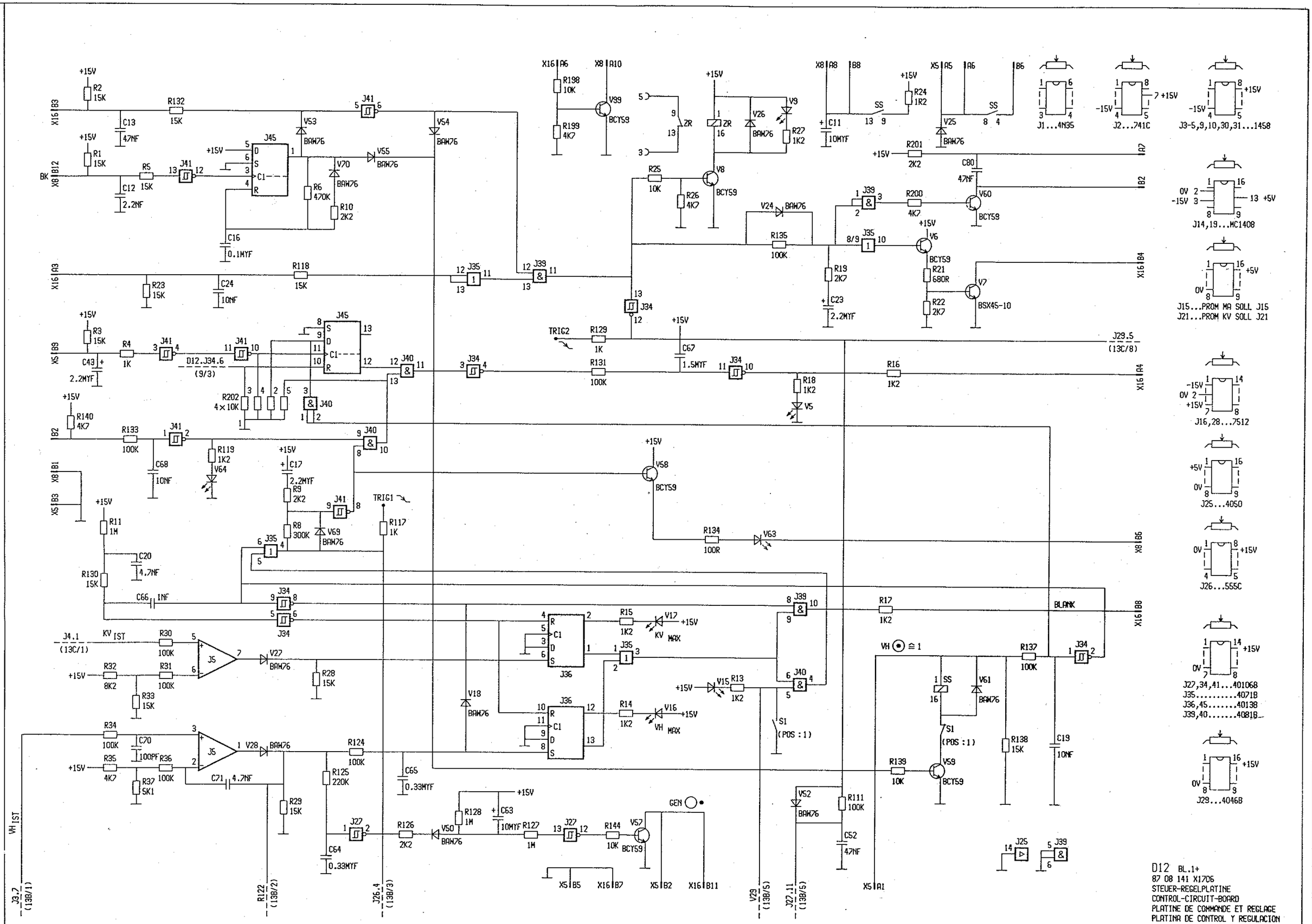

BLATTVERW.

FUNKTIONSV.

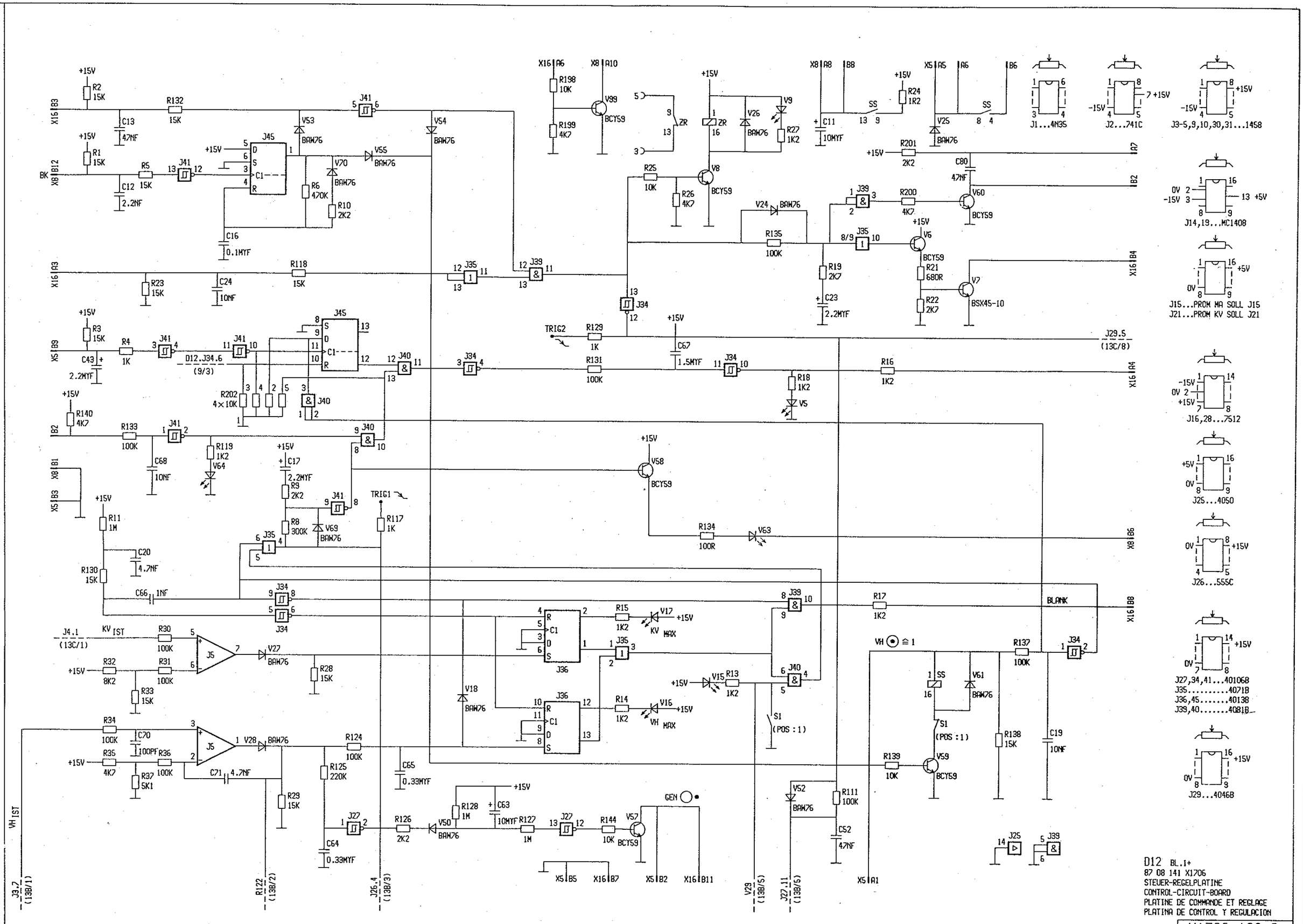

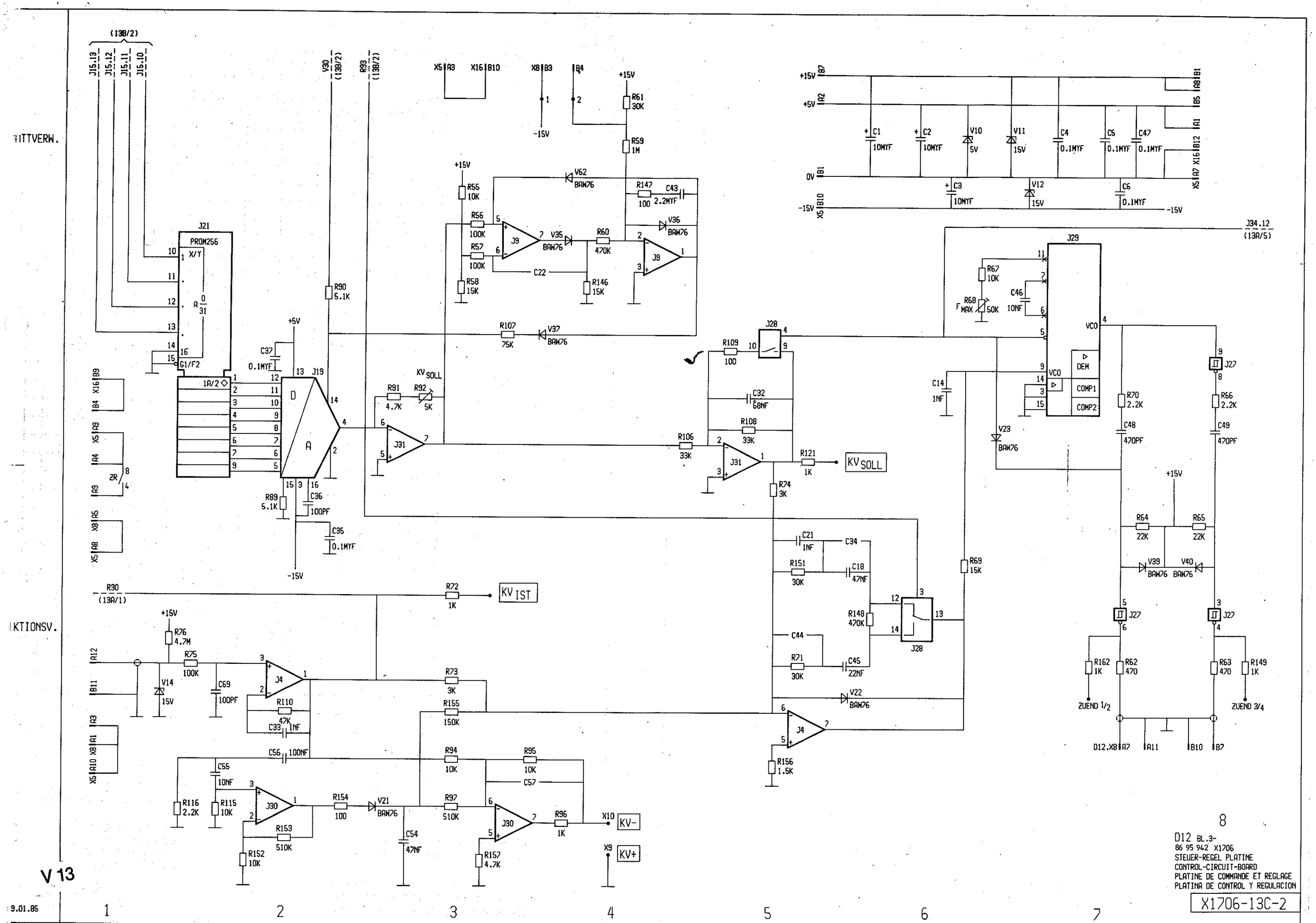
TITTVERW.
KTIONSV.
V 13
9.01.85
(13B/2)
J15.13
J15.12
J15.11
J15.10
V30 (13B/2)
R93 (13B/2)
X5 A3
X16 B10
X8 B3
B4
+15V
R61 30K
R59 1M
-15V
J21
PROM256
X/Y
A 0/31
G1/F2
1A/2
J19
D
A
+5V
C37 0.1MYF
R90 5.1K
R89 5.1K
C36 100PF
C35 0.1MYF
-15V
R91 4.7K
R92 5K
KV SOLL
J31
R55 10K
R56 100K
R57 100K
R58 15K
J9
V62 BAW76
V35 BAW76
R60 470K
R146 15K
C22
R147 100
C43 2.2MYF
V36 BAW76
R107 75K
V37 BAW76
R109 100
J28
C32 68NF
R108 33K
R106 33K
R121 1K
R74 3K
KV SOLL
R30 (13A/1)
R72 1K
KV IST
R76 4.7M
R75 100K
V14 15V
C69 100PF
J4
R110 47K
C33 1NF
R73 3K
R155 150K
C56 100NF
C55 10NF
R116 2.2K
R115 10K
J30
R153 510K
R152 10K
R154 100
V21 BAW76
C54 47NF
R94 10K
R95 10K
C57
R97 510K
R157 4.7K
R96 1K
X10 KV-
X9 KV+
C21 1NF
C34
R151 30K
C18 47NF
R148 470K
C44
R71 30K
C45 22NF
V22 BAW76
R156 1.5K
R69 15K
+15V
+5V
0V
-15V
C1 10MYF
C2 10MYF
V10 5V
V11 15V
C4 0.1MYF
C5 0.1MYF
C47 0.1MYF
C3 10MYF
V12 15V
C6 0.1MYF
J34.12 (13A/5)
J29
R67 10K
R68 F MAX 50K
C46 10NF
VCO
DEM
COMP1
COMP2
C14 1NF
V23 BAW76
R70 2.2K
C48 470PF
J27
R66 2.2K
C49 470PF
R64 22K
R65 22K
V39 BAW76
V40 BAW76
R162 1K
R62 470
R63 470
R149 1K
ZUEND 1/2
ZUEND 3/4
D12.X8 A7 A11 B10 B7
8
D12 BL.3-
86 95 942 X1706
STEUER-REGEL PLATINE
CONTROL-CIRCUIT-BOARD
PLATINE DE COMMANDE ET REGLAGE
PLATINA DE CONTROL Y REGULACION
X1706-13C-2
1
2
3
4
5
6
7

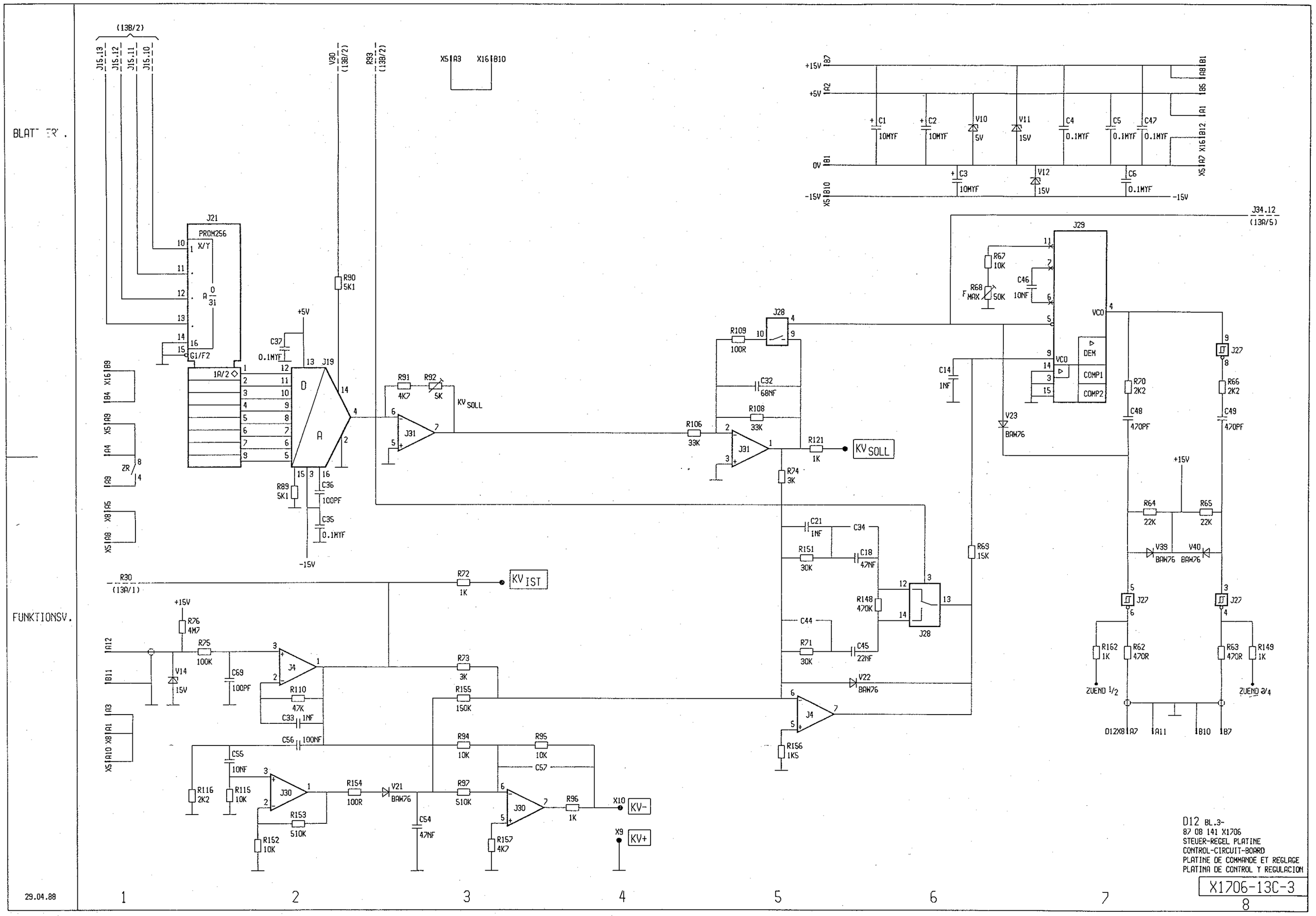
BLATT ER .
FUNKTIONSV.
J21
PROM256
X/Y
G1/F2
1A/2
J19
D
A
J31
J28
J29
VCO
DEM
COMP1
COMP2
J27
J4
J30
KV SOLL
KV IST
KV-
KV+
ZUEND 1/2
ZUEND 3/4
+15V
+5V
0V
-15V
D12 BL.3-
87 08 141 X1706
STEUER-REGEL PLATINE
CONTROL-CIRCUIT-BOARD
PLATINE DE COMMANDE ET REGLAGE
PLATINA DE CONTROL Y REGULACION
X1706-13C-3
29.04.88

Erzeugnis:
Product:
Produit:
Producto:

Polymobil / Polymobil II

Schaltungsunterlage, circuit diagram
schema des connexions, esquema-electrico } X1706

Blattverw

Funktionsv

Baugruppe, Assembly group Sous-ensemble, seccion			A	B	C	D	E	F	G	H	J	K	L	M	N	P	R	S	T	U	V	W	X	Y	Z
N1	D3	84 63 424 X1706	X	X																					
	D4	84 04 899 X1706	X	X																					
	D12	84 61 220 X1706	X																						
		86 95 942 X1706		X																					
W1	D6	74 69 810 X1558	X	X																					
H1	D1	80 94 617 X1426	X	X																					

X = Liefereinsatz, beginning of delivery, debut de la livraison, comienzo del suministro

O = Nachträglicher Einbau möglich, subsequent installation possible, montage ulterieur possible, piede instalarse ulteriormente

Kompatibilitätsliste
Compatibility list
Liste de compatibilite
Lista de compatibilidades

X1706 - 30 - 2B