VIDEO INFORMATION (VOLUME 2 OF 2)

LIST OF DOCUMENTS IN THIS BINDER:

O DIGITAL SCOPOFIX MDP(M)

O DETACHABLE CASSETTE HOLDER FOR BV25

O SET STERILE COVERS FOR BV25 II-SHIELD, C-ARM, AND TANK UNIT

O SPRINGBOW FOR BV25 C-ARM

O SPACER FOR BV25

O

O

O II CASCADE GENERATOR

O TV CAMERA XTV8S FOR BV25

O HT CONV. TANK

O HM 17" TV MONITOR

O 15 CM II-TUBE

O VIDEO HARD COPY UNIT

O 15 CM II-SHIELD

O 15 CM II-SHIELD ASSY FOR SURGERY

NOTE:
O Indicates documents present in this binder.

OTHER BINDER: SYSTEM INFORMATION

Copyright © 1993 Philips Medical Systems International B.V.
ALL RIGHTS RESERVED

SERVICE VIDEO INFORMATION
BV25 SYSTEM

MODULE CODE NUMBER : 4522 983 54971

LIST OF PAGES AND DRAWINGS

Copyright © 1993 Philips Medical Systems International B.V.
ALL RIGHTS RESERVED

SERVICE MANUAL-UNIT

Digital Scopofix MDP

9807 721 0.001

This manual contains descriptive information
on the equipment identified by
the typenumber as stated above.

IPSC: Best

Copyright © '91 PHILIPS MEDICAL SYSTEMS NEDERLAND B.V.
BEST THE NETHERLANDS

Printed in The Netherlands (91.0)

SERVICE MANUAL-UNIT
DIGITAL SCOPOFIX MDP
TYPE NR: 9807 721 0.001

SERIAL NR:

LIST OF PAGES AND DRAWINGS

PRINTING INSTRUCTIONS : 4522 983 14171

SECTION A: INTRODUCTION AND TECHNICAL DATA

CONTENTS

1. PURPOSE

The Medical Dual image Processor (MDP) is a digital video image memory for use in surgical X-ray systems (BV 25N). It has image processing capabilities for use in surgical X-ray systems and kidney Lithotriper.

2. VERSIONS

- 9807 721 00001	: basic MDP version compatible with: BV25-N family.
- 9807 721 01001	: basic MDP version, EMC-modified compatible with: BV25-N family.
- 9807 721 02001	: Basic MDP version, EMC-modified compatible with: BV25-N family and XTV8.

3. ITEMS SUPPLIED

- MDP built in a 19" rack
- front plate.
- installation material.

The rack consists of:

- Power supply	
- Back Panel pcb	(WHD10)
- AD converter/ADNR pcb	(WHD11)
- Noise Reducer pcb	(WHD13)
- 2 Memory pcb's	(WHD15,17)
- Subtractor pcb	(WHD19)
- Local Control pcb	(WHD20)
- Controller pcb	(WHD25)

The installation material consists of:

- 4x screw M4 to mount the front plate.
- 4x screw M6 to mount the MDP-rack in the BV-25 trolley.

4. EQUIPMENT IDENTIFICATION

The type numberplate is mounted on the front (left inside) of the rack.

5. TECHNICAL DATA

5.1. DIMENSIONS AND WEIGHT

Height : 300 mm
Width : 412 mm
Depth : 435 mm
Weight : 25 kg

5.2. PERFORMANCE DATA

5.2.1. Power supply

Supply voltage	: 220 ±10% V 50/60 Hz
Supply current	: < 2 A
turn on current	: < 25 A
Leakage current	: < 3.5 mA

5.2.2. Connectors

Video input (connector WHD:X3):

Source impedance	: 75 Ohm
Video amplitude	: 1100 mV ±5%
Sync amplitude	: 300 mV ±50 mV
Bandwidth	: 8 Mhz

Video output 1 and 2 (connector WHD:X4, WHD:X5):

Impedance	: 75 Ohm
Bandwidth	: 8 MHz
Video amplitude	: 1100 mV ±5%
Sync amplitude	: 300 mV ±50 mV

Synchronisation is normally locked to incoming video. When no input signal is available a standard interlaced SYNC-signal is internally generated, X-tal locked.

Remote control interface (connector WHD:X2)

All command lines are 5V LOCMOS-compatible and active-HIGH.

Input circuit:

- All inputs are low pass filtered
- Input impedance : 47 KOhm
- Input voltage HIGH : > 3.5 V
- Input voltage LOW : < 1.5 V

Output circuit:

- All outputs are buffered and protected with diodes.
- Output voltage HIGH : > 3.5 V (at -1 mA).
- Output voltage LOW : < 0.5 V (at +1 mA).

8 lines are reserved for automatic identification of the different memory units.

IDENT	FUNCTION	STATUS #
1	Single frame store + averaging	LOW
2	Dual frame store + averaging + integration	HIGH
3	Disc option	HIGH
4	Subtraction	HIGH
5	Zoom option (future feature)	LOW
6	Gamma correction	HIGH
7	Contour correction (future feature)	LOW
8	Spare	LOW

= Status for switched-on MDP-unit

5.2.3. TV Line Systems

- Interlaced or Non-interlaced possible.
- Jumper for selection 50Hz/60Hz.

50 Hz (CCIR)	60 Hz (EIA)
625 lines, interlaced 2 x 313 lines, non-interlaced	525 lines, interlaced 2 x 263 lines, non-interlaced

5.2.4. Image Matrix Size

The total unblanking period is stored.

AD conversion : 8 bits
Sampling rate : appr. 19 MHz
Memory depth : 10 bits

50 Hz : 576 lines of 975 pixels
60 Hz : 478 lines of 975 pixels

5.3. ENVIRONMENTAL DATA

The MDP-unit complies with classification C1 (UXW 13600).

Ambient temperature:

storage : -25°C to +70°C.
operation : +10°C to +40°C.

Relative humidity:

storage : 10% to 90%
operation : 10% to 85%

5.4. APPLICABLE STANDARDS

- UL 478
- CSA C22.2 nr. 154
- HHS certified
- IEC 435
- CISPR 11 and 11A
- FCC rules CFR 47 part 2 and 15
- VDE 871 level B

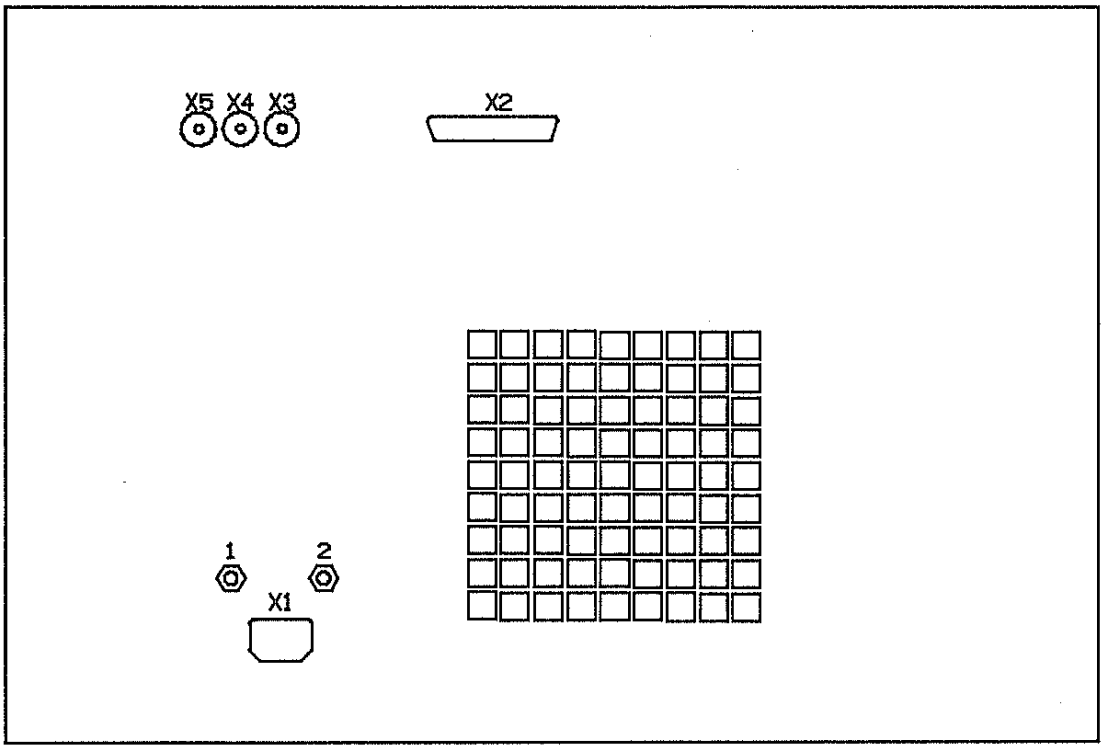

Figure 1: Rear view MDP-unit

Connector	Function
WHD:1	Safety ground
WHD:2	Signal current
WHD:X1	Mains supply
WHD:X2	Remote connector interface
WHD:X3	Video input
WHD:X4	Video output 1
WHD:X5	Video output 2

Figure 2 : Connector locations

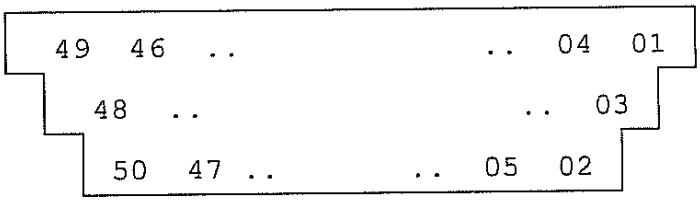

Figure 3: Rear view MDP-unit

INPUT		OUTPUT	
FUNCTION	PIN	FUNCTION	PIN
START	08	IDENT1	38
MEM1	10	IDENT2	40
MEM2	11	IDENT3	42
LIH	13	IDENT4	44
ER	14	IDENT5	46
NR1	19	IDENT6	48
NR2	20	IDENT7	50
NR3	21	IDENT8	49
NR4	22	BUSY	37
DISK OPTION	02,04,06	DISK OPTION	33
GAMMA1	24	+5V/500 Ohm	30,32
GAMMA2	25	SPARE1	31
SUB1	27	SPARE2	35
SUB2	28		
ZOOM	16		
INVERT	17		
TRACE	12		
RESERVED	41,45		
0V	01,03,05,07,09, 15,18,23,26	0V	29,34,36,39,43 ,47

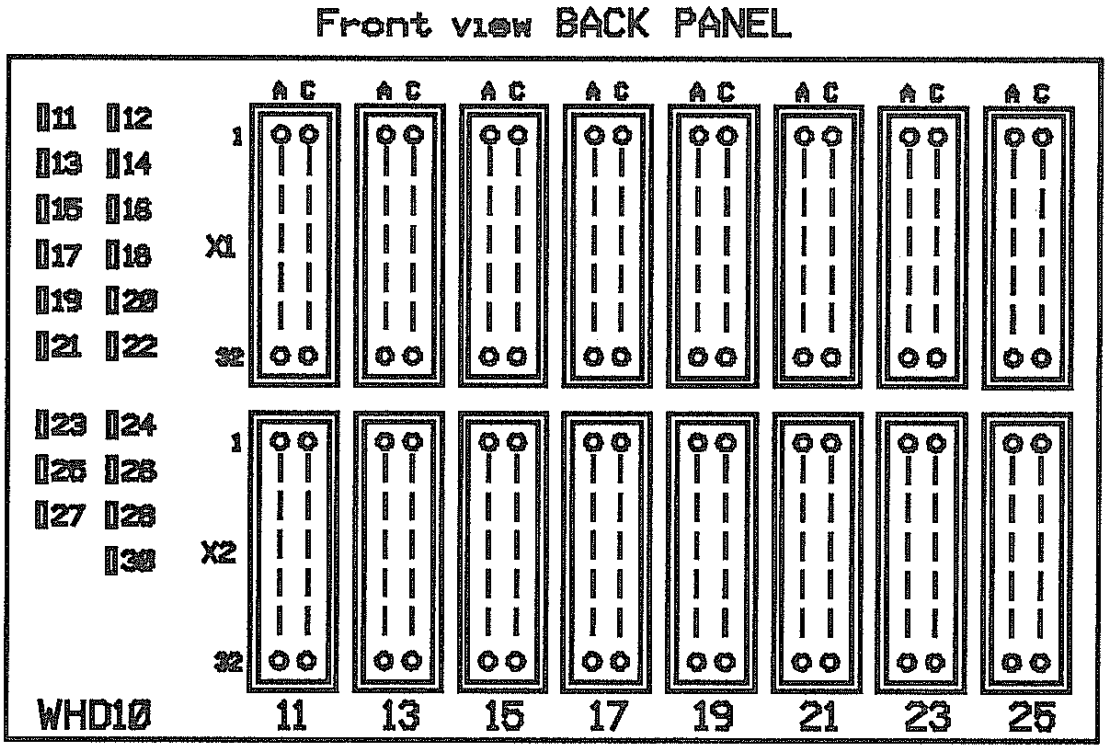

Figure 4: Front view Back panel

SECTION B: INSTALLATION

CONTENTS

1. INTRODUCTION

The instructions how to install the MDP-unit in a BV 25 system will be found in the System Service Manual of the BV 25 system.

2. TOOLS AND TEST EQUIPMENT

- Standard toolset.

3. PROGRAMMING FACILITIES

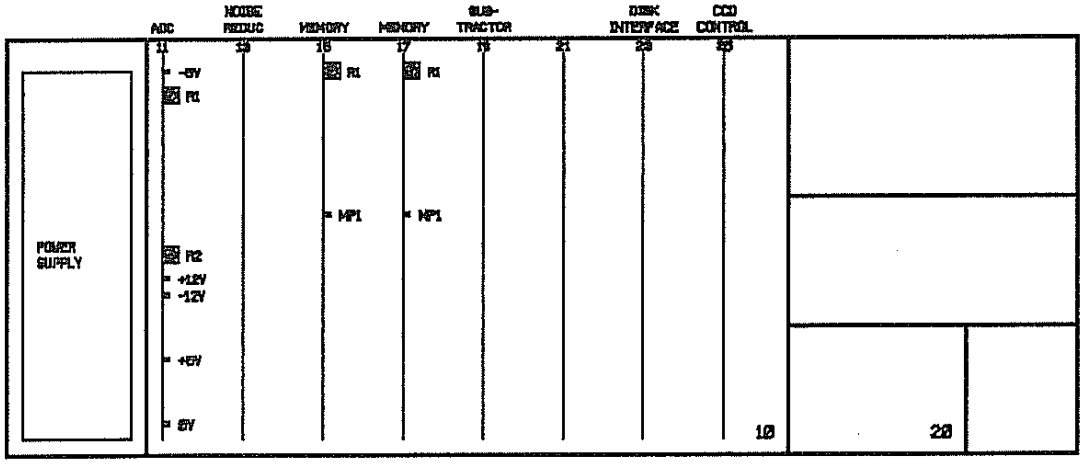

Figure 1: Switches and jumpers at the front of the rack

3.1. AD CONVERTER BOARD / AD-NOISE REDUCER BOARD (WHD11)

Depending on the MDP version, basic or basic modified for XTV-8, an AD converter board (up to 4522 107 87053) or an ADNR board (4522 108 1962.) is placed in the MDP. The ADNR board is downwards compatible with the AD-converter board. It contains the same functionality however the ADNR board is extended with a recursive digital filter.

Programming facilities:

AD converter board : Switch WHD11:S1 activates the internal video test-pattern.

ADNR board : - Switch WHD11:S1 activates the internal video test-pattern.
- Jumper WHD11:W1 enables/disables the noise reduction function.

3.2. SUBTRACTOR BOARD (WHD19)

Figure 2 gives a simplified diagram to explain the function of the switches WHD19:S1 -> S4.
Figure 3 shows selection possibilities of the switches WHD19:S1 -> S4.

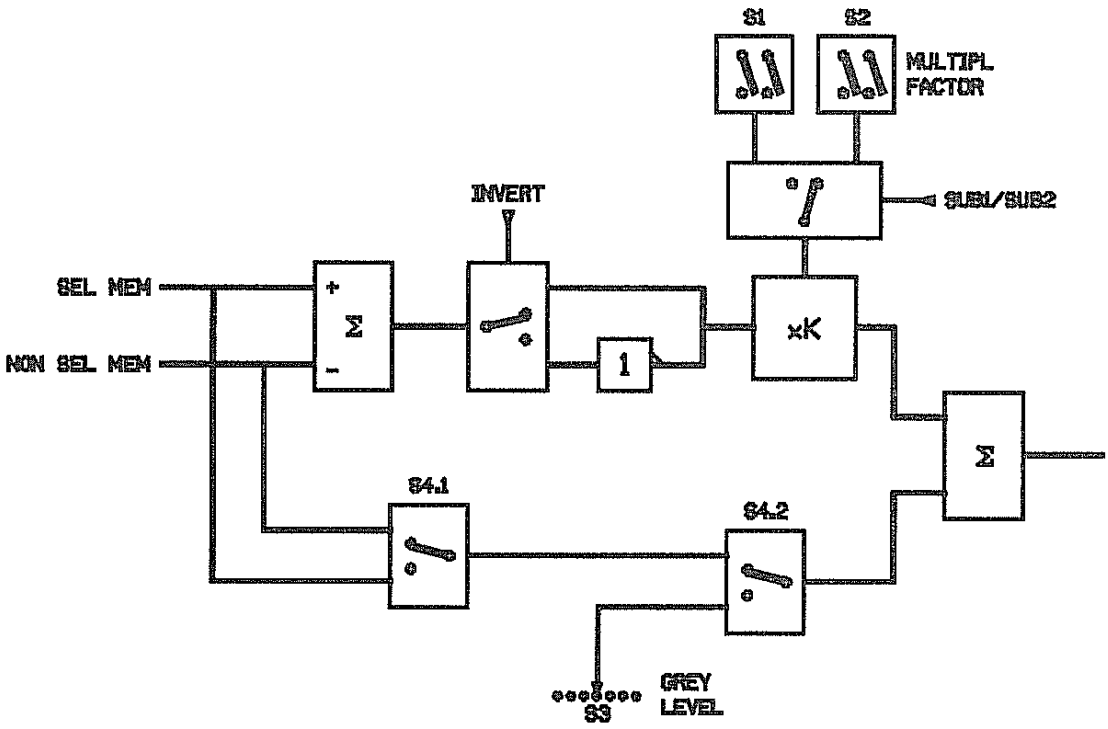

Figure 2: Simplified diagram of the subtractor board

SWITCH	SELECT	SELECTED FUNCTION
S1		multiply factor (SUB1)
	0	4
	1	2
	2	1
	3	0.5
S2		multiply factor (SUB2)
	0	4
	1	2
	2	1
	3	0.5
S4.2	open	selection from S4.1
	closed	selection from S3
S4.1	open	selected memory
	closed	non-selected memory
S3	0	black
	1	
	.	grey level
	.	step ± 69 mV
	.	0 - 94%
	E	
	F	white

Figure 3: Selection possibilities of the switches S1 -> S4 on the Subtractor board (WHD19).

3.3. Controller board (WHD25)

Depending upon the TV-line system of the applied video, the jumper WHD25:W1 has to be set in the position 50 Hz (1-2) or 60 Hz (1-3).

4. INSTALLATION INSTRUCTIONS

1. Mount the unit as described in the relevant Service Manual-System.

2. Set switches and jumpers in the for application required position (see relevant Service Manual-System).

NOTE
*Factory settings of switches and jumpers are marked **bold** in next tables*

SWITCHES	POSITION	SETTING
WHD11:S1	**OFF**	Test pattern OFF
WHD19:S1.1 :S2.1 :S3.1 :S4.1 :S4.2	**2** **1** **3** **Closed** **Open**	Multiply factor 1 for SUB1 Multiply factor 2 for SUB2 non selected memory added as background

Table for application settings

Jumpersettings ADNR-board (4522 108 1962.):

JUMPERS	POSITION	FUNCTION
WHD11:W1	1-2 **1-3** #	Noise reduction OFF Noise reduction ON (XTV8)

= In case of XTV5 camera, set jumper in position 1-2

Jumpersettings Controller board (WHD25):

JUMPERS	POSITION	FUNCTION
WHD25:W1	**1-2** @ 1-3	50 Hz 60 Hz

@ = set jumper in correct position

3. Connect cables to the rear of MDP-unit.

WARNING
When the 220V -supply cable (WHD-X1) has been connected, some parts of the unit will have a 220V tension (also when the power switch is in the OFF-position

CONNECTOR	FUNCTION
WHD-X1	220V supply
WHD-X2	system interface
WHD-X3	video input
WHD-X4	video output 1
WHD-X5	video output 2

Connections at rear of MDP-unit.

SECTION C: SETTING TO WORK

CONTENTS

1. INTRODUCTION

Pcb's are factory adjusted but in case of a disturbance of the adjustment, it can be necessary to re-adjust. Therefore in section F an additional description for adjustments is given.

NOTE
the unit does not work properly with PCB's on extender boards because of the high frequency used.

2. EQUIPMENT REQUIRED

- standard toolset

3. CONTROLS AND INDICATORS

3.1. AD CONVERTER/ADNR BOARD (WHD11)

- Led WHD11:H1 is lighting when the internal video is disturbed.

3.2. MDP OPERATIONAL FUNCTIONS

On the Local Control board (WHD20) commands can be given to select functions or modes. Local commands are overruled by remote commands. Acceptance of a command (both local or remote) is indicated by lighting of the appropriate LED on the Local Control board (WHD20).

3.2.1. Digital bypass

With digital bypass, the video signal passes the path: video in - ADC - DAC - video out, without memory store. Therefore:

- de-activate all local commands (no LED's on the Local Control board are lighting).

3.2.2. Processing functions

Applicable for both live and frozen images.

Gamma correction:

- activate GAMMA1 (curve 1) or GAMMA2 (curve 2).

Curve 1 is intended for contrast enhancement.
Curve 2 is intended for correction of film non-lineairity in hard copy units.

Subtraction:

The activated memory is the live image.

1. Activate MEM1 (SUB=MEM1-MEM2)
2. Activate SUB1 (SUB=MEM2-MEM1)
3. Activate INVERT (INVERT inverts subtraction result)

3.2.3. Noise reduction

Applicable for live images.

Last Image Hold:

1. Select a memory (MEM1 or MEM2)
2. Activate LIH and START

NOTE:
For live noise reduction, START must be active. De-activate START to freeze the noise reduced image.

3. Select noise reduction grade:

   NR1: K=1/2
   NR2: K=1/4
   NR3: K=movement defined (K=1/4 -> 1/2)
   NR4: K=movement defined (K=1/8 -> 1/4)

NOTE:
No selection of noise reduction grade will result in: K=1 (live image).

Electronic Radiography:

1. Select a memory
2. Activate ER and START
3. Select number of images for integration:

   NR1: N=2
   NR2: N=4
   NR3: N=8
   NR4: N=16

4. De-activate START after appearence of the frozen image.

3.2.4. Trace

1. Select a memory
2. Activate TRACE and START

NOTE:
For live tracing, START must be active. De-activate START to freeze the traced image.

3. Select trace-white or trace-black:

   NR1: white
   NR2: black

NOTE:
NR3, NR4 or no selection disables the TRACE

4. ADJUSTMENT FACILITIES

AD Converter board / ADNR board (WHD11)

Potentiometer WHD11:R1 adjusts the maximum amplitude for the AD convertor (factory adjusted to video amplitude of 1100 mV).

Measuring points on front of the board:

MEARURING POINT	VALUE
WHD11:-5V	-5V
WHD11:+5V	+5V
WHD11:-12V	-12V
WHD11:0V	0V
WHD11:+12V	+12V

Memory board 1 (WHD15) and Memory board 2 (WHD17)

WHD15/17:R1 : adjustment output amplitude (factory-adjusted to 1100 mV).

WHD15/17:MP1 : measuring point for video output.

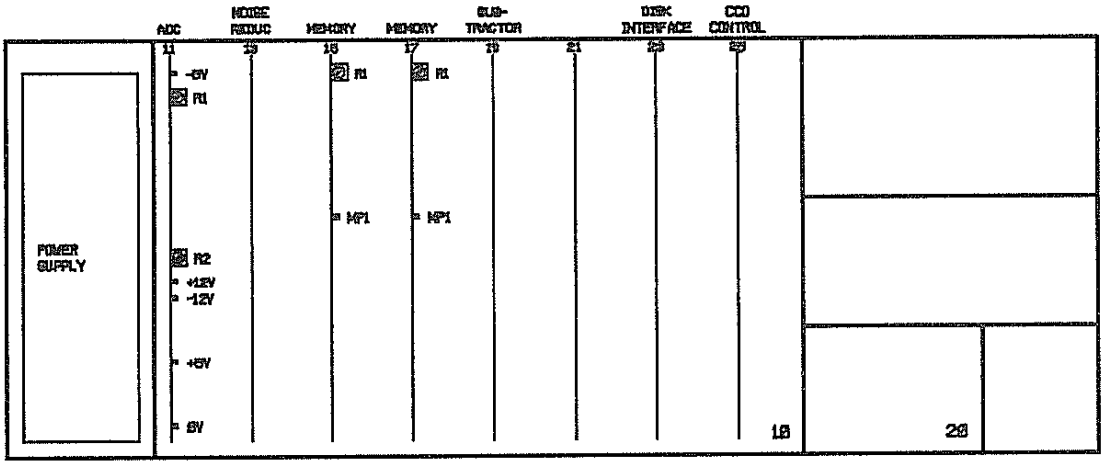

Figure 1: Measuring and adjusting points at the front of the MDP-rack

5. SETTING UP AND TESTING

This paragraph describes the setting up and functional test of an installed unit. Therefore if the related Service Manual-System prescribes other or additional checks, follow these instructions.

The MDP-unit is factory adjusted to an input-to-output ratio of 1 ± 5% (at 1100 mV) and needs no further adjustment.

NOTE
After switching ON (or OFF), wait 30 seconds before switching off (or on) again.

1. Prior to power-on, check the correct settings of jumpers and switches, the proper connection of cables and the unlock position of the shipping security, as described in section B.

2. Switch power on and check:

   a. Power-on lamp WHD:H1 is lighting.
   b. All LED's on Local Control board (WHD20) are lighting up for about 1 second.

3. For a new delivered MDP-unit, the AD/ADNR- and Memory-boards are factory adjusted to an input-to-output ratio of 1:1 (at 1100 mV) and need no further adjustment.

4. Check all the processing functions as mentioned in paragraph "Controls and indicators" of this section.

SECTION F: CORRECTIVE MAINTENANCE

CONTENTS

1. INTRODUCTION

This section gives procedures for adjustments, replacements and identification of a faulty power supply or faulty pcb's. Pcb's are to be replaced and not repaired.

2. EQUIPMENT REQUIRED

- standard toolset
- multimeter (Ri>10 Mohm)
- oscilloscope (dual channel)

3. ADJUSTMENTS

Place jumper WHD11:W1 in position 1-2 (if present).

For the correct adjustment it is necessary to follow the sequence of the procedure:

1. Output gain
2. Input offset
3. Overall gain

During the adjustments the outputs WHD:X4 and WHD:X5 of the unit should be connected to either a 75 ohm impedance or a monitor (75 ohm termination).

IMPORTANT
The remote control connector WHD-X2 must be disconnected.

If the measured video-signal on WHD15/17:MP1 (Memory boards) contains too much noise, use the output connector (WHD:X4 or WHD:X5).

After adjustment, place jumper WHD11:W1 in position 1-3 (if present).

Output gain

1. Switch the power on.

2. Set on the AD Converter/ADNR board the switch WHD11:S1 in position 'test'.

3. Connect measuring point WHD15:MP 1 of Memory 1 or output WHD:X4 to channel A of an oscilloscope.

4. Measure a staircase pattern like the one in fig. 1.

5. Adjust with potentiometer WHD15:R1 on Memory 1 board, the maximum amplitude of the signal to 1100 mV ± 5%.

6. Connect measuring point WHD17:MP 1 of Memory 2 board or output WHD:X5 to channel B of the oscilloscope.

7. The pattern on channel B must be covering the pattern on channel A. This can be accomplished by the adjustment of potentiometer WHD17:R1 on Memory 2.

8. Switch the test-switch WHD11:S1 off.

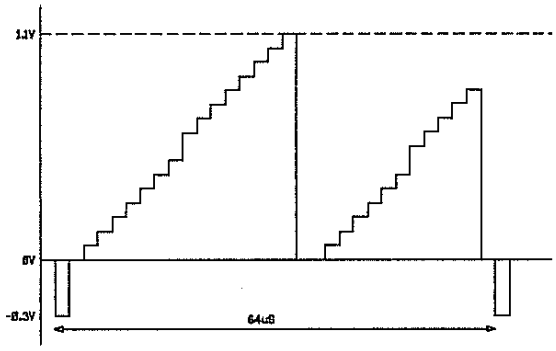

Figure 1: The generated test-pattern

Input offset

1. Disconnect input-signal on connector WHD:X3 of the unit.

2. Turn the potentiometer WHD11:R2 on the AD Converter/ADNR board fully counter clock wise (ccw). On the oscilloscope a DC-level with sync-pulses appears.

3. Turn the potentiometer WHD11:R2 slowly clock wise (cw). The DC-level will decrease with steps of 4 mV. (Can only be seen with a 1:1-probe).

4. Turn the potentiometer WHD11:R2 cw until the DC-level just equals zero.

Overall gain (1:1)

1. Apply on WHD:X3 video (from the system).

2. Measure on WHD:X3 and on WHD17:MP1 of Memory 2 or output WHD:X5 the amplitude of the video-signal.

3. Adjust with potentiometer WHD11:P1 on the AD Converter/ADNR board the input gain. The input/output-ratio must be 1.

4. Check the adjustment procedure as follows.

5. Change the connection of the oscilloscope from Memory 2 to Memory 1 and measure the amplitude of the output video signal from Memory 1.

6. If both ratio's are 1 then the adjustments are correct. If not, then the total adjustment procedure has to be repeated.

4. REPLACEMENTS

Sometimes inserting of the power supply unit in the glider entry causes problems. It is possible to remove the front support (plate) of the power supply unit first. After placing the power supply in the glider, the support can be mounted again.

5. FAULT FINDING PROCEDURE

5.1. INTRODUCTION

IMPORTANT
Disconnect the remote control connector (WHD-X2) to enter TEST-mode.

WARNING
Although the power switch is in the OFF-position, some parts of the unit stil have a 220V tension!!

CAUTION
Before inserting, connecting or disconnecting boards or wiring, always switch OFF the power supply!!

NOTE
The unit does not work properly with PCB's on extender boards because of the high frequency used

5.2. POWER SUPPLY

(see chapter 5.1., IMPORTANT, WARNING, CAUTION and NOTE).

1. Remove front cover and switch the unit on.

2. Check if 220V is present (watch the neon indicator).

3. Measure on the measuring points WHD11: +12V, +5V, -5V and -12V of the AD Converter board if the correct voltages are present (tolerance ± 5%).

4. When the correct voltages are not present, successively disconnect the flatcable connections at the Controller (WHD25) and measure the voltages. When correct, the Local Control Board (WHD20) or the flatcables are defective. Replace or change successively.

5. When still not correct, disconnect with the exception of the AD Converter/ADNR board (WHD11) all the boards. Measure again the voltages. When correct, one of the boards is defect. Replace successively to find out which one.

6. In case of fault change successively the AD Converter/ADNR board and power supply. When no voltages present, the backpanel or wiring is defective.

7. Switch OFF the power.

NOTE
After using a new AD Converter/ADNR board and/or a new power supply, check the adjustments mentioned in chapter 3.

5.3. MDP-FUNCTION

(see chapter 5.1., *IMPORTANT, WARNING, CAUTION* and *NOTE*.

1. Remove the front cover and switch the unit off.

2. Disconnect/remove with the exception of the AD Converter/ADNR board all the boards.

5.3.1. Controller/Local Control-board

Boards connected : AD Converter/ADNR board (WHD11).

1. Insert the Controller-board (WHD25) and connect the Local Control-board (WHD20).

2. Switch the power on. All LED's on the Local Control-board are on for about 10sec. After that time they should ALL be off.

3. If this has not happened, change successively, after the power has been switched off, the AD/ADNR-, Controller- and Local Controller-board and the flat-cable connection.

4. Test again. If the problem is not solved, the backpanel is defective.

5.3.2. Analog Bypass

Boards connected: AD Converter/ADNR board (WHD11)
Controller (WHD25)
Local Control-board (WHD20)

1. Switch the power off.

2. Insert Memory 1 (WHD15) and connect the video-cables between the AD Converter/ADNR board (WHD11) and Memory 1 (WHD15) and between Memory 1 (WHD15) and connector WHD:X4.

3. Apply a video-signal to connector WHD:X3 of the unit.

4. Watch the output-video from connector WHD:X4 on a monitor. If this is not present, it will be caused by one of the following faults:

   . inputrelais AD Converter/ADNR board defective.
   . outputrelais Memory 1 defective. Exchange Memory boards to check.
   . video-cables defective.

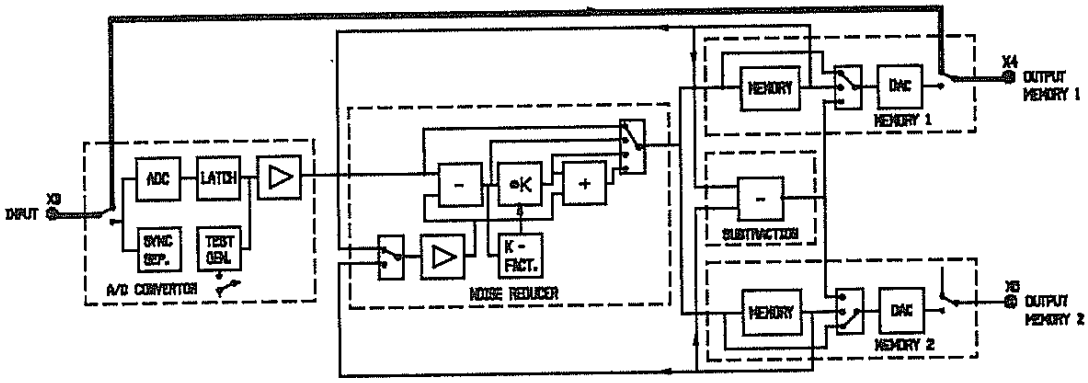

Figure 2: Analog bypass

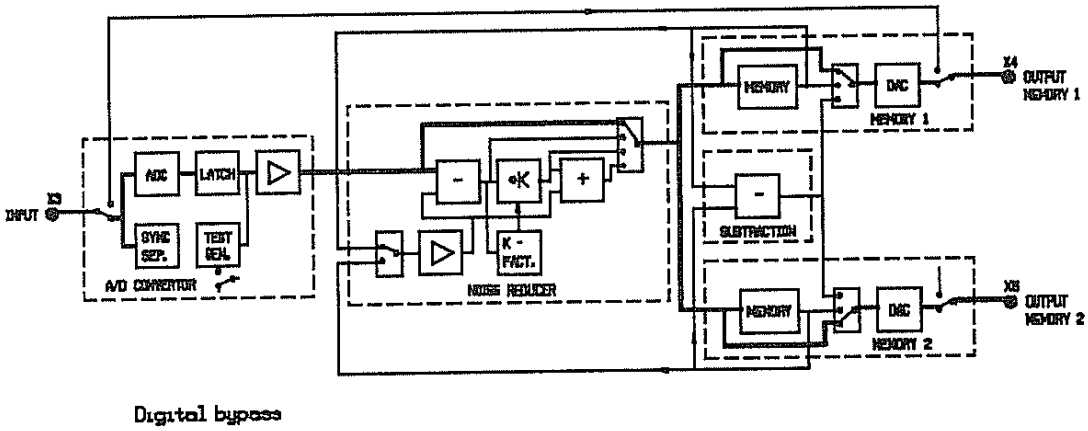

Figure 3: Digital bypass

5.3.3. Digital Bypass

Boards connected: AD Converter/ADNR board (WHD11)
Controller (WHD25)
Local Control-board (WHD20)
Memory 1 (WHD15)

1. Place jumper WHD11:W1 in position 1-2 (if present).

2. Insert the Noise Reducer-board (WHD13), the second Memory board (WHD17) and connect the video-cables between Memory 2 (WHD17) and connector WHD:X5.

3. Switch the power on. Check again if all LED's on the Local Control-board (WHD20) are on for about 10 sec., when not change the AD Converter/ADNR board (WHD11).

4. Video must be again present on connector WHD:X4 and because of the second memory also on connector WHD:X5. If the video is not present a Memory, AD Converter/ADNR or Noise reducer board can be defective.

5. After test, place jumper WHD11:W1 in position 1-3 (if present).

5.3.4. Test Generator

Boards connected: AD Converter/ADNR board (WHD11)
Controller (WHD25)
Local Control-board (WHD20)
Memory 1 (WHD15)
Memory 2 (WHD17)
Noise reducer (WHD13)

1. Place jumper WHD11:W1 in position 1-2 (if present).

2. Switch with the switch WHD11:S1 on the AD Converter/ADNR board the test generator on. A staircase video-signal is generated, resulting in two white-to-black bar patterns on the monitor screen. If not the AD Converter/ADNR board is defective.

3. Place jumper WHD11:W1 in position 1-3 (if present).

5.3.5. Noise Reducer Functions

Boards connected: AD Converter/ADNR board (WHD11)
Controller (WHD25)
Local Control-board (WHD20)
Memory 1 (WHD15)
Memory 2 (WHD17)
Noise reducer (WHD13)

setting: switch WHD11:S1 -> on

In case of AD converter board (up to 4522 107 87053):

1. Press switch LER on the Local Control-board.

2. Press switch LNR1 to select subtract circuit of Noise reducer-board and with a oscilloscope measure the signal on connector WHD:X4 or watch the monitor screen of Memory 1 (WHD15) (fig 4b). A DC-voltage of 550 mV with sync pulses can be measured or on the monitor a grey level can be seen.

3. Press switch LNR2 to select add circuit in addition (fig 4c). Nothing should change.

4. Press switch LNR3 to select multiplication circuit in addition (fig 4.d). The original staircase can be measured or on the monitor the bar pattern can be seen.

5. Press LER and LNR3 again to reset the functions.

6. Repeat the test but instead of pressing key LER use key LLIH. Measure the signal on connector WHD:X5 or watch the monitor screen of Memory 2 (WHD17).

7. When only function LER is faulty, change Memory 1 (WHD15). When only function LLIH is faulty, change Memory 2 (WHD17). When both functions are faulty, or when LNR1 works fine but LNR2 or LNR3 does not, change the Noise Reducer-board (WHD13).

8. Repeat the tests. If there is still something wrong, change the backpanel.

In case of ADNR board (4522 108 1962.):

To test the MDPM noise reducer function, follow the same procedure as descibed by the AD converter board (see above).
On the ADNR PCB an extra noise reduction function (for XTV-8) is available. This extra function can be tested as follows:

1. Place jumper WHD11:W1 in position 1-3

2. Switch OFF the MDPM noise reducer function (Switch off: LNR1, LNR2, LNR3 and LNR4 on local control board).

   The following signals must be active:

   . START
   . LIH
   . MEM1 or MEM2

3. Obtain a moving noisy image (fluoroscopy with moving object)

Results: when the image does not corresponds with one or more of next points, replace ADNR board.

1. The image must contain less noise in case the noise reduction function is activated.
   To compare, change jumper position WHD11:W1 1-2 and 1-3.
2. During fluoroscopy, in the image moving artefacts (smearing) must be visible.
3. The outcoming video image may not contain irregularities.

5.3.6. Subtractor-board

Boards connected and settings : see paragraph "Noise Reducer Functions"

1. Switch the power OFF.

2. Mark the settings of the switches WHD19:S1, S2, S3 and S4.2 of the Subtractor-board.

3. Select "grey-level" (switch WHD19:S4.2 closed) and select 3 for the level with switch S3.

4. Select for LSUB1 a multiplication factor 1 (switch WHD19:S1 position 2) and for LSUB2 a multiplication factor 2 (switch WHD19:S2 position 1).

5. Insert the Subtractor-board.

6. Disconnect the input video from WHD:X3, switch the power on and store the test-pattern in Memory 1 by pressing the keys LLIH, LMEM1 and twice LSTART on the Local Control-board.

7. Switch off the test-pattern and store the black level in Memory 2 by pressing LMEM2 and twice LSTART.

8. Subtract the memory images by pressing key LSUB1.

9. Return to memory 1 (LMEM1). The result is a new bar pattern. If we compare this pattern with the original one we can see that the new one has a much larger white bar which is the result of the addition of the grey level with the test-pattern.

KEYS	CLIPPED BAR
SUB1	white (small)
SUB1, INVERT	black (large)
SUB2	white (medium)
SUB2, INVERT	black (very large)

Figure 4 : Keys on the Local Control-board.

10. Repeat the subtract function. Instead of using LSUB 1 use the keys selections of fig. 4.

11. Switch the power off, pull out the Subtractor-board and exchange it when something was incorrect else reset the original switches settings and insert the board.

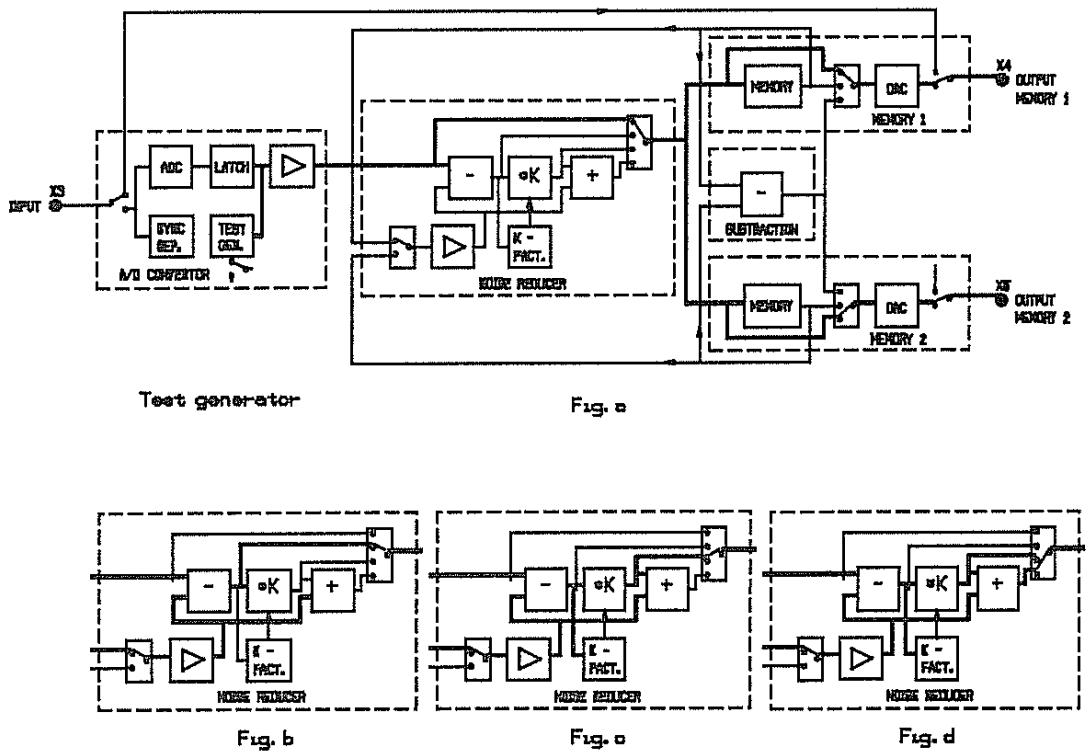

Figure 5: a) Test generator, b) Test mode NR1, c) Test mode NR2, d) Test mode NR3

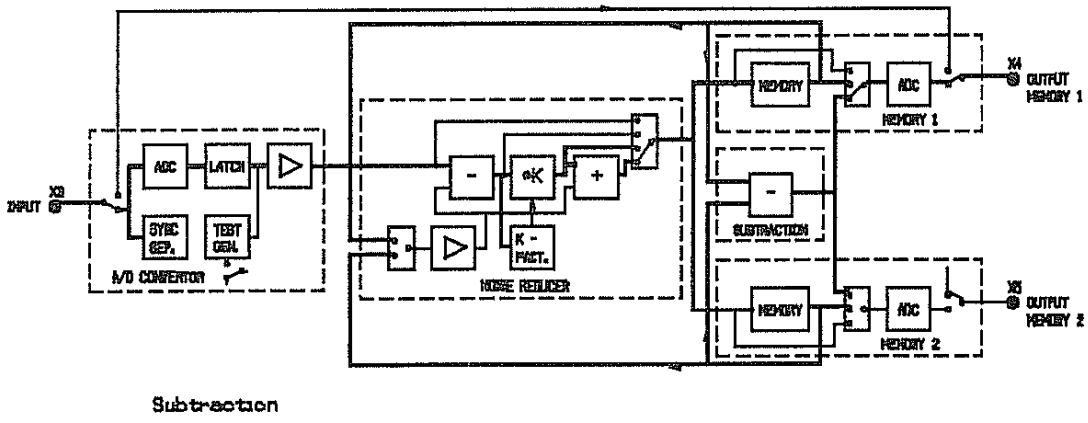

Figure 6: Subtraction

5.3.7. Gamma Corrections

All boards connected
switch WHD11:S1 -> on

1. Switch the power on.
2. Select Memory 1 (LMEM1).
3. Measure with an oscilloscope on connector WHD:X4. If you press one of the two gamma correction keys the level of some steps of the staircase will change.
4. Test both gamma corrections. When incorrect change Memory 1 (WHD15).
5. Repeat the test for Memory 2. Select Memory 2 (LMEM2) and measure on WHD:X5.

SECTION G: EXPLANATIONS

CONTENTS

1. INTRODUCTION

See diagram Z1.2.

In diagram Z1.2. 6 pcb's can be discerned (see also figure 1.). On the AD Converter/ADNR board the applied analog video-signal is converted into an 8 bit digital signal and sent to the Noise Reducer. On the Noise Reducer some noise reduction functions are possible, using the images coming from the AD Converter/ADNR board and from the selection of one of the two Memory boards. The image at the output of the Noise Reducer is saved in the selected memory.
Each memory has a DAC, so the contents of each memory can be displayed on a monitor.
Using the Subtractor and the DAC on one of the two memory boards, the contents of the memories can be subtracted and displayed on a monitor, without effecting the contents of the memories.
On the Controller a micro-processor is used for the mode selection and timing- and control-signals.

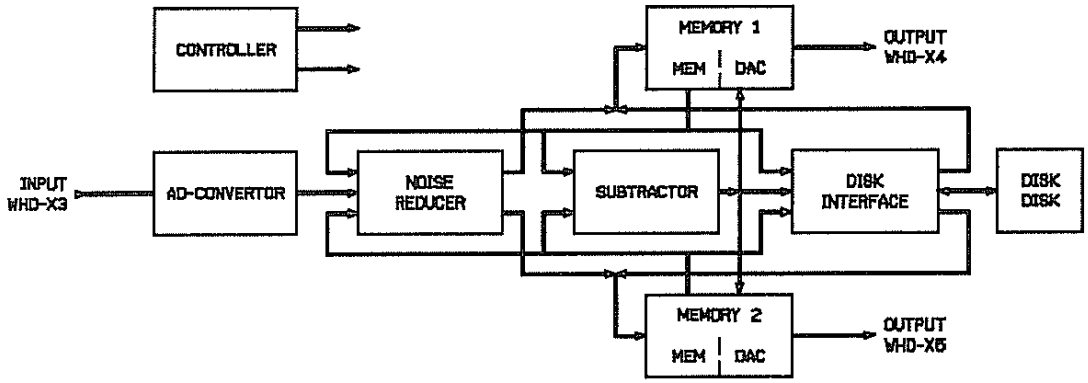

Figure 1: Functional block diagram of the MDP-unit

2. AD CONVERTER- or ADNR- BOARD

The input video is connected to WHD:X3 and via bypass- switch and buffer sent to the clamping circuit. After clamping the video to 0 V, the video is converted into an 8 bit digital signal. Then in case of ADNR-board, recusive filtered and after that buffered (outputbus AD-OUT 0 to 7).
For test purpose a digital staircase is generated (WHD11:S1 on TEST) resulting in two white-to-black bar patterns on the monitor.
The sync pulses from the video are separated into horizontal and vertical sync pulses and buffered (output signals V-pulse and H-pulse).
The sync detector/oscillator detects if no sync pulses are present and then generates X-tal controlled sync pulses.
The PLL-oscillator, locked by the horizontal sync, is running at a frequency of about 40 MHz; after clipping, pulse stretching, dividing by two and buffering we get signals CLOCK and CLOCK-N of 20 MHz.
The clock signals, sent to the processor and the memory boards, are synchronised with the incoming video-syncs.

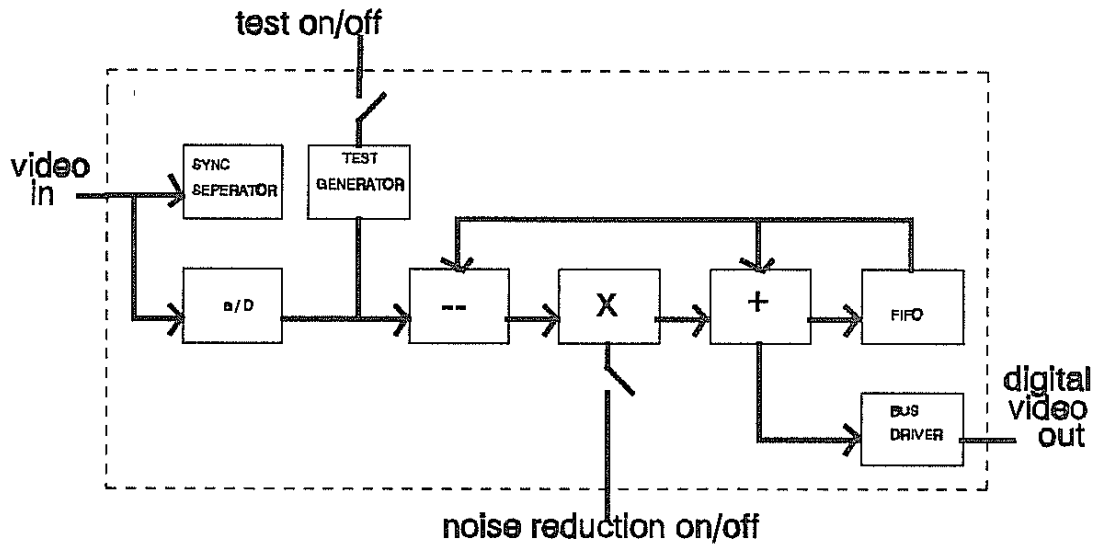

Figure 2: Simplified diagram of the ADNR-board

3. NOISE REDUCER BOARD

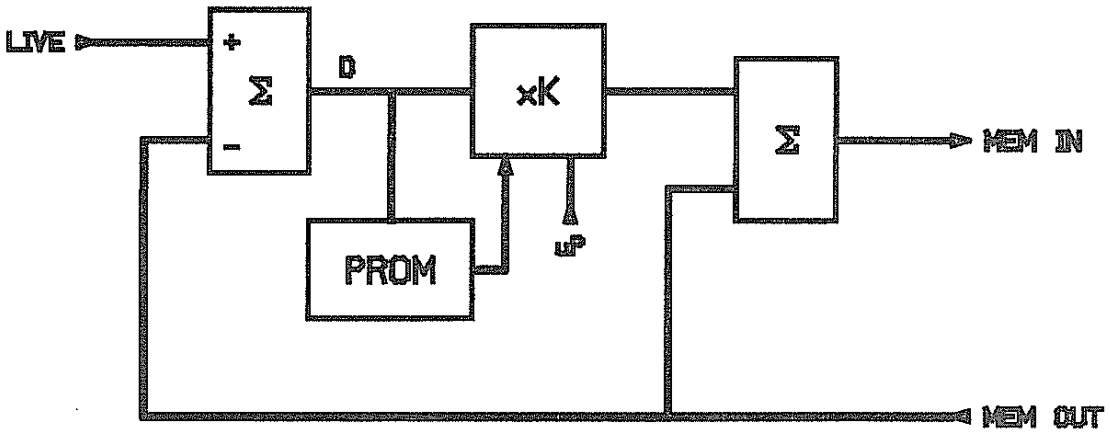

Figure 3: Simplified diagram of the noise reducer

The selected memory signal, from Memory 1 (WHD15) or Memory 2 (WHD17), is subtracted from the live signal and the result is multiplied with a factor K (0<K<1) and then added to the selected memory signal.

The factor K:

Fixed K : Value K is supplied by the processor (K=1/4 or 1/2).
Moving K : Dependent upon the value of the subtracted signal (D) a PROM makes a K-factor (K=1/4 <-> 1/2 or K=1/8 <-> 1/4, application requirments).
Tracing K : The factor K is defined by the selection trace white/trace black and by the value of the subtracted signal D.
This results in storage of the minimum respectively maximum value of each pixel.

	TRACE WHITE	TRACE BLACK
D>0	K=1	K=0
D<0	K=0	K=1

4. MEMORY BOARD (Memory 1 and Memory 2 are identical)

After buffering, the digital video is set in the Charge-Coupled-Device (CCD) memory. Via the output and input switches of the CCD memory (field 1 and 2) the memory is refreshed.
The output of the CCD memory is buffered and sent to the noise reducer and subtractor. The selector switch chooses between the output of the CCD and the output of the subtractor.
The digital to analog convertor (DAC) gets its input from the selector switch which selects:

a. Input-video of memory.
b. Output-video of CCD memory/Output-video of subtractor.
c. Gamma corrected signal as b.

5. SUBTRACTOR BOARD

Figure 4 gives a siplified diagram of the subtractor.

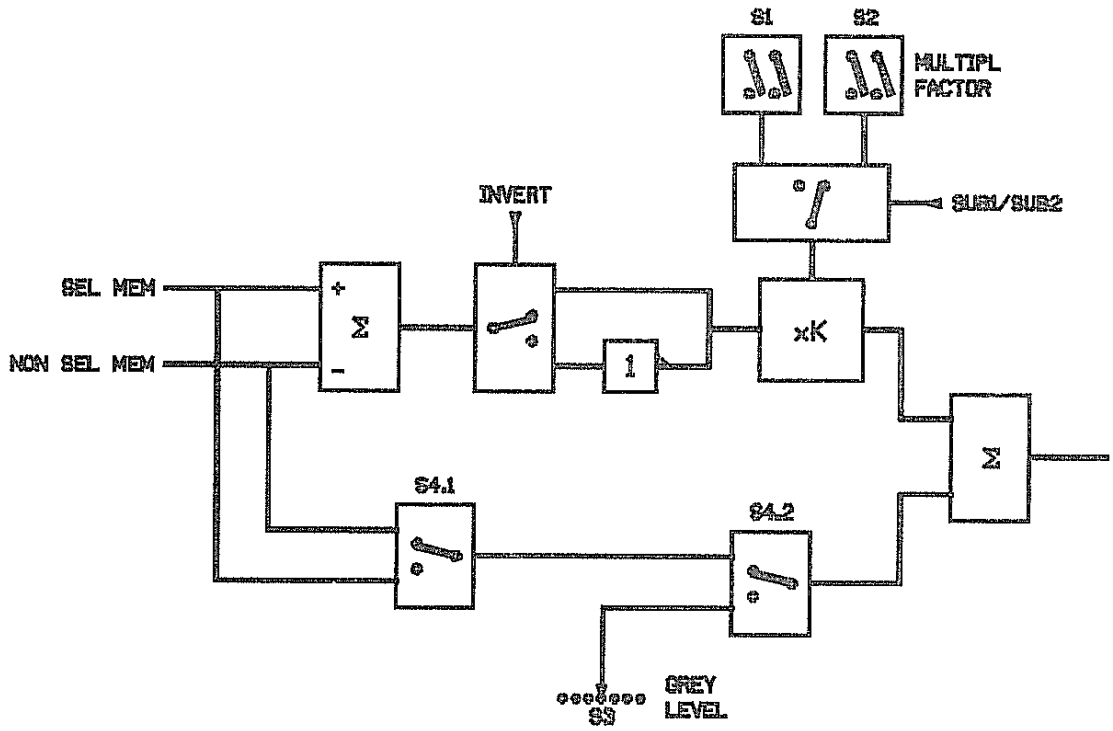

Figure 4: Simplified diagram of the subtractor

With the switches S1 - S4 and the keys LMEM 1, LMEM 2, LSUB 1, LSUB 2 and LINVERT on the Local control-board the next algorithm can be filled in.

INVERT * (SEL - NON SEL) * MULT.FACTOR + ADDITION

Where:

- LMEM 1 or LMEM 2 is the memory which is marked as SEL (SELECTED). (NON SEL=NON SELECTED memory).
- LSUB 1 or LSUB 2 selects the multiplication factor which is set by the switches S1 and S2 (see fig. 3).
- LINVERT: non active= -1; active= +1.
- Addition is filled in by the switches S4.1, S4.2 and S3. (See fig. 3).

After latching memory 1 and 2, one of the memory busses is inverted and added to the other (non-inverted) memory bus resulting in : Memory 1 - Memory 2.
The subtracted digital video-signal is multiplied by a factor 1/2, 1, 2 or 4 and added to a selected background. This selected background is one of the next three possibilities:

a. Image from Memory 1.
b. Image from Memory 2.
c. Grey-level.

If the subtracted and multiplied digital video signal is negative or the amplitude is too high, the signal is limited:
The negative signal is converted to black level and the signal level higher than the maximum amplitude is set to white level.

6. CONTROLLER BOARD

The microprocessor on the Controller board is driven by clock pulses, being generated on the AD Converter/ADNR board. Those pulses have been synchronised to the horizontal and vertical sync pulses of the video-signal. When no video sync pulses are present, then an internal generator on the AD Converter/ADNR board supplies the sync-pulses.
On-board timers generate internal and external timing signals, which are transferred to the data control bus through output X2 A15 : C27.

PHILIPS

Philips Medical Systems

parts list

Philips Medical Systems Nederland B.V. | Technical Service | Best

SERVICE PARTSLIST UNIT

PEI: 9807 721 02001

DESCRIPTION: DIGITAL SCOPOFIX MDP

SERIAL NR:

List of pages and drawings

*printing instructions 4522 983 32261

SCHEME/ PAGE	INDEX	CODENUMBER	DESCRIPTION	DATA
	WHD11X3-WHD15X3	4522 103 73462	coax cable B	
	WHD20X1-WHD25X3	4522 103 73741	flatcable	34p
	WHDX2-WHD25X5	4522 103 73702	flatcable	50p
	WHDX3-WHD11X4	4522 103 73711	coax cable A	
	WHDX4-WHD15X4			
	WHDX5-WHD17X4			
WHD	F1	2432 088 00051	fusebase 250V	
WHD	F1	2432 088 00052	fusecarrier 20	
WHD	F1	2432 088 00053	fusecarrier 32	
WHD	F1	2422 086 01266	UL-fuse time-lag 2x	2A 250V
WHD	H1	2422 475 00026	lampholder	
WHD	M1	2822 031 01195	fan whisper 220V	
WHD	M1	4522 920 47461	vibration damper for fan	4x
WHD	M1	2422 070 98001	cordset for fan	
WHD	S1	2422 126 01029	rocker switch	250Vac
WHD	X1	2422 013 00041	connection block	2p
WHD	Z1	2712 171 00036	mains filter	

SCHEME/ PAGE	INDEX	CODENUMBER	DESCRIPTION	DATA
WHD 9		9415 012 04301	power supply PE1204/30	
WHD10		4522 107 87001	backpanel digital memory	
WHD11		4522 108 19621	pcb ADNR	
WHD13		4522 107 87101	pcb noise reducer	
WHD15-17		4522 107 87156	pcb digital memory	2x
WHD19		4522 107 87201	pcb subtractor	
WHD20		4522 108 10851	local control	
WHD25		4522 107 87253	pcb controller dig. memory	
WHD25	D13	9336 681 10682	SRAM NVR2	
WHD25	D4	4522 103 39801	prom chipselect	
PZ-1	a-b-c-d	4522 103 95662	set proms	
		2422 034 17982	socket housing	48skt

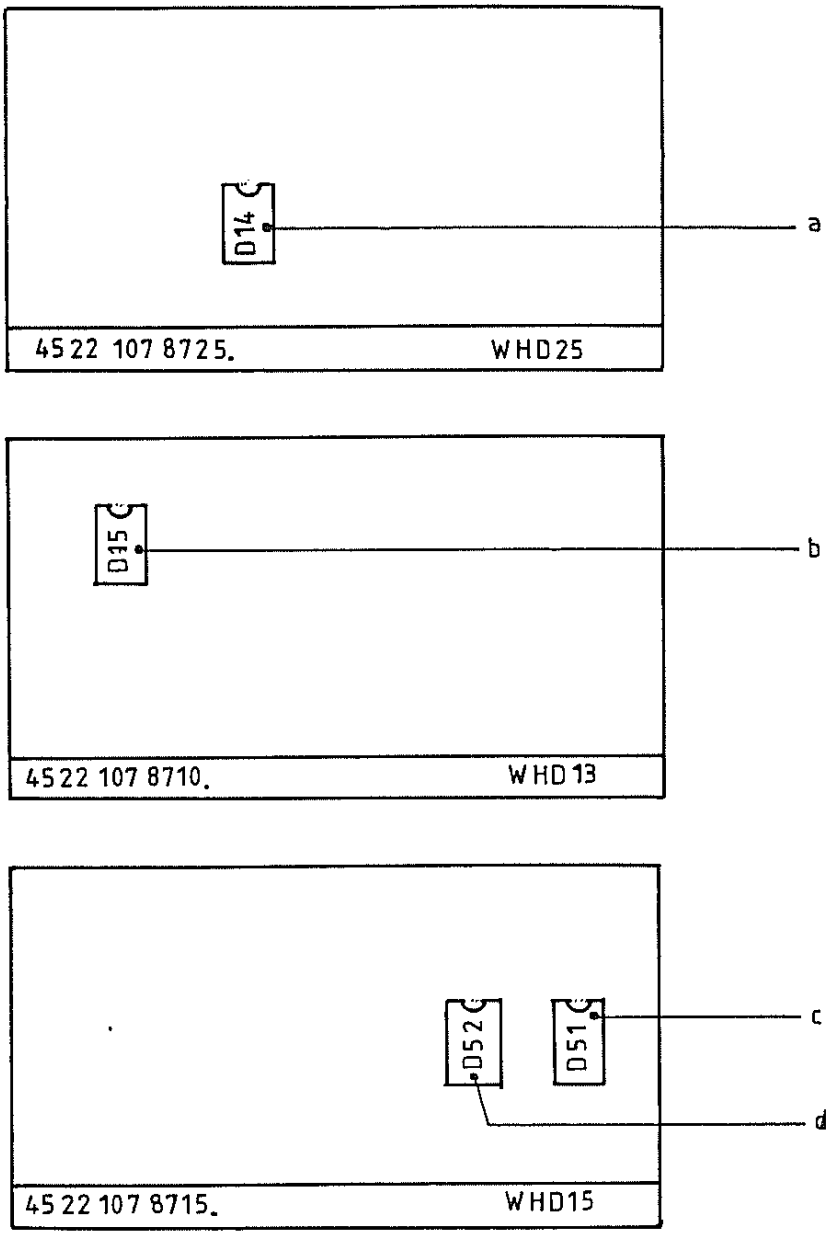

a = 4522 104 7294.
b = 4522 103 3983.
c = 4522 103 3984.
d = 4522 103 3985.

Section Z : DRAWINGS

CONTENTS

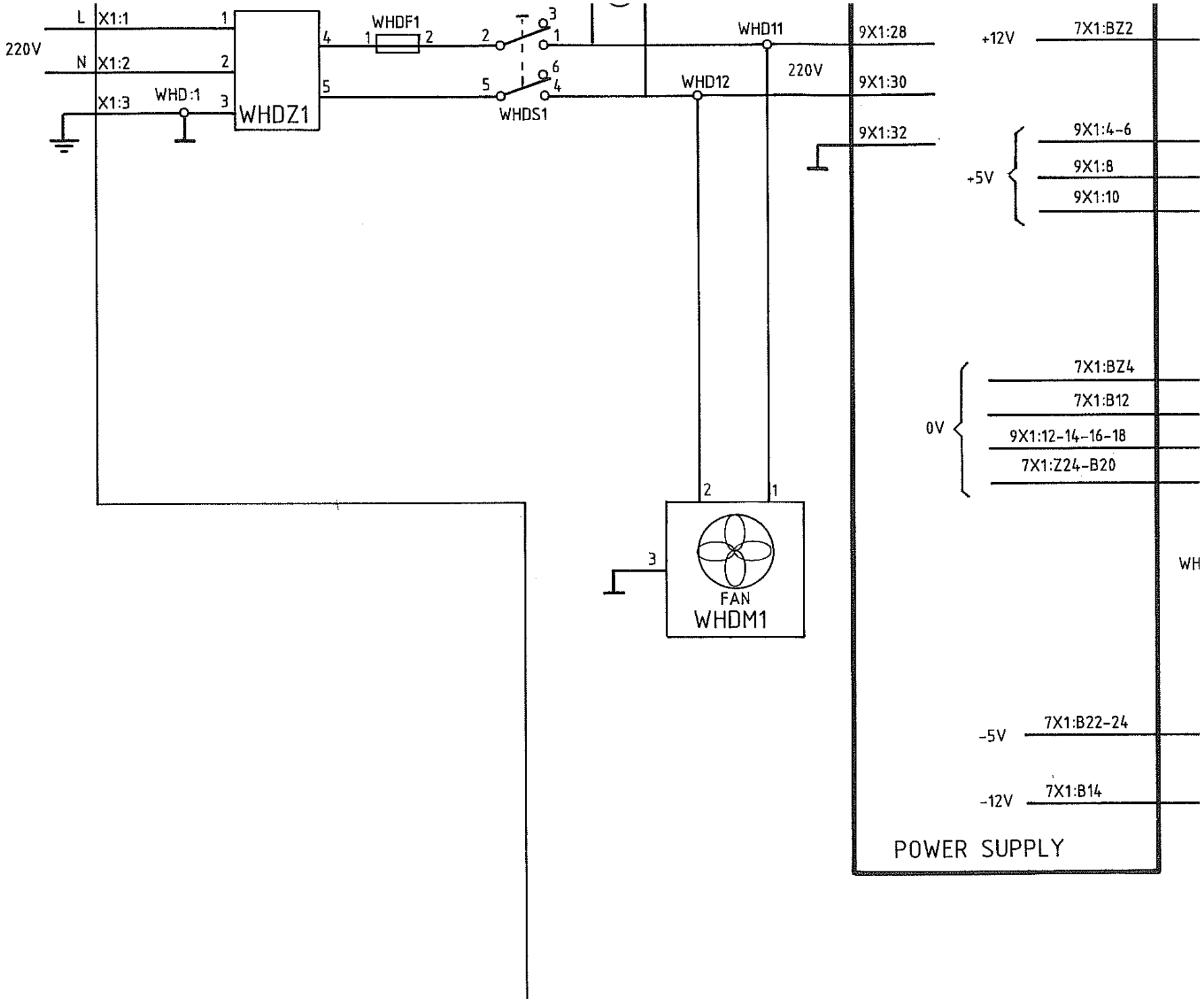
Section Z
Scopofix MDP
220V
L
N
X1:1
X1:2
X1:3
WHD:1
WHDZ1
WHDF1
WHDS1
WHD11
WHD12
220V
9X1:28
9X1:30
9X1:32
+12V
7X1:BZ2
+5V
9X1:4-6
9X1:8
9X1:10
0V
7X1:BZ4
7X1:B12
9X1:12-14-16-18
7X1:Z24-B20
FAN
WHDM1
WH
-5V
7X1:B22-24
-12V
7X1:B14
POWER SUPPLY

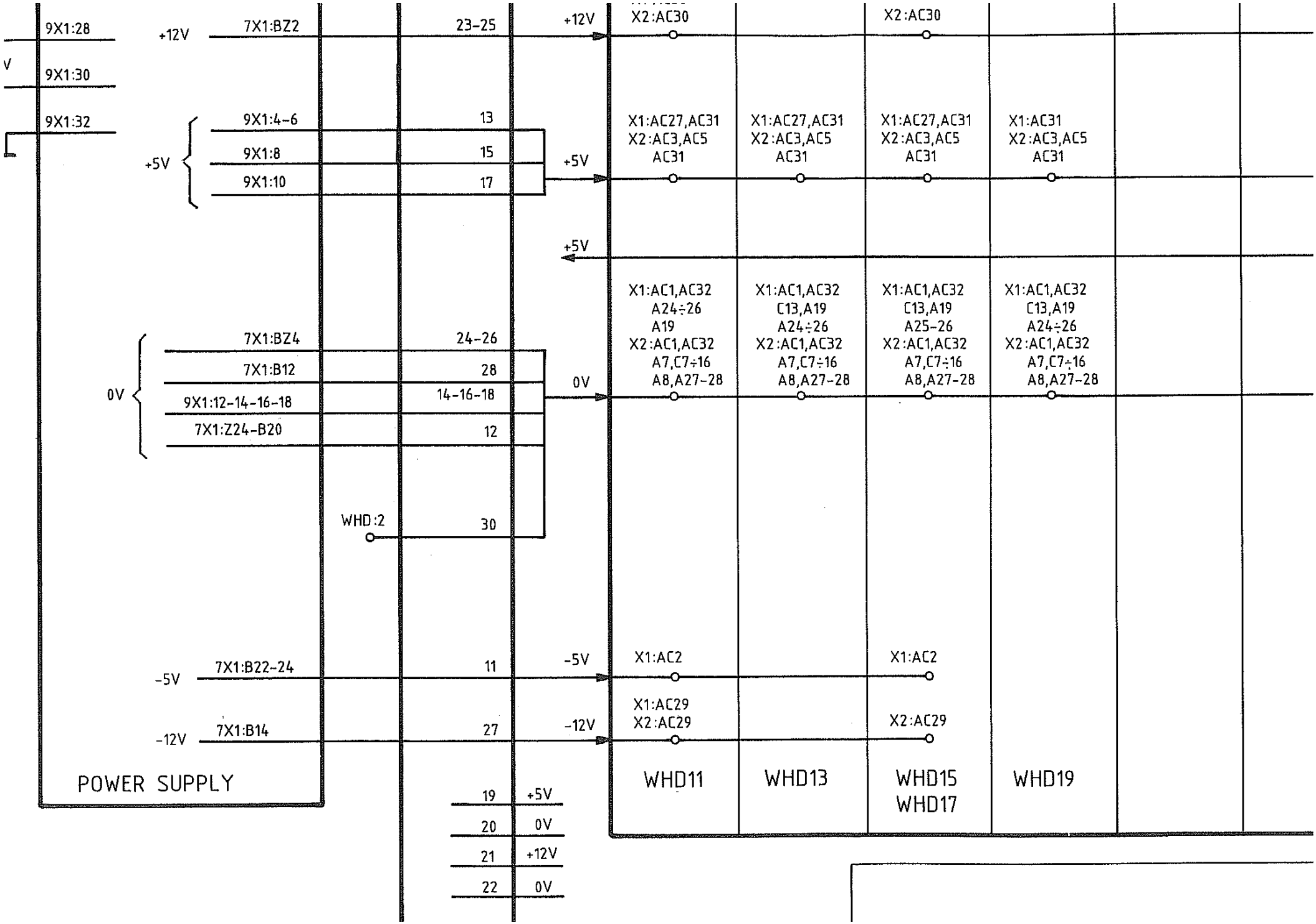
9X1:28
9X1:30
9X1:32
+12V
7X1:BZ2
23-25
+12V
X2:AC30
X2:AC30
+5V
9X1:4-6
9X1:8
9X1:10
13
15
17
+5V
X1:AC27,AC31
X2:AC3,AC5
AC31
X1:AC27,AC31
X2:AC3,AC5
AC31
X1:AC27,AC31
X2:AC3,AC5
AC31
X1:AC31
X2:AC3,AC5
AC31
+5V
0V
7X1:BZ4
7X1:B12
9X1:12-14-16-18
7X1:Z24-B20
24-26
28
14-16-18
12
0V
X1:AC1,AC32
A24÷26
A19
X2:AC1,AC32
A7,C7÷16
A8,A27-28
X1:AC1,AC32
C13,A19
A24÷26
X2:AC1,AC32
A7,C7÷16
A8,A27-28
X1:AC1,AC32
C13,A19
A25-26
X2:AC1,AC32
A7,C7÷16
A8,A27-28
X1:AC1,AC32
C13,A19
A24÷26
X2:AC1,AC32
A7,C7÷16
A8,A27-28
WHD:2
30
-5V
7X1:B22-24
11
-5V
X1:AC2
X1:AC2
-12V
7X1:B14
27
-12V
X1:AC29
X2:AC29
X2:AC29
POWER SUPPLY
WHD11
WHD13
WHD15
WHD17
WHD19
19 +5V
20 0V
21 +12V
22 0V

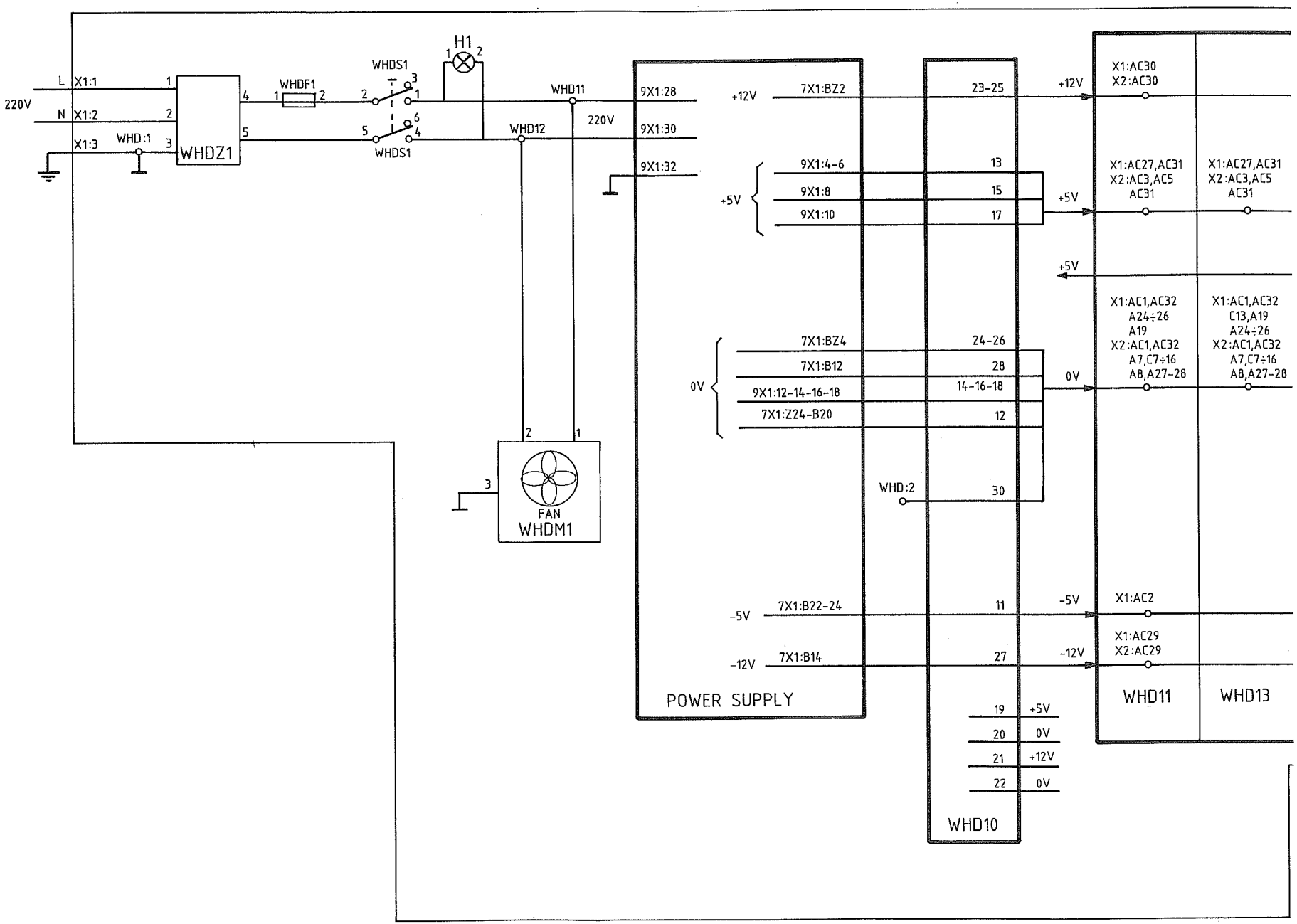
220V
L X1:1
N X1:2
X1:3
WHD:1
WHDZ1
WHDF1
WHDS1
H1
WHD11
WHD12
220V
FAN
WHDM1
9X1:28
9X1:30
9X1:32
+12V
7X1:BZ2
+5V
9X1:4-6
9X1:8
9X1:10
0V
7X1:BZ4
7X1:B12
9X1:12-14-16-18
7X1:Z24-B20
WHD:2
-5V
7X1:B22-24
-12V
7X1:B14
POWER SUPPLY
23-25
13
15
17
24-26
28
14-16-18
12
30
11
27
19 +5V
20 0V
21 +12V
22 0V
WHD10
X1:AC30
X2:AC30
X1:AC27,AC31
X2:AC3,AC5
AC31
X1:AC1,AC32
A24÷26
A19
X2:AC1,AC32
A7,C7÷16
A8,A27-28
X1:AC2
X1:AC29
X2:AC29
WHD11
X1:AC27,AC31
X2:AC3,AC5
AC31
X1:AC1,AC32
C13,A19
A24÷26
X2:AC1,AC32
A7,C7÷16
A8,A27-28
WHD13

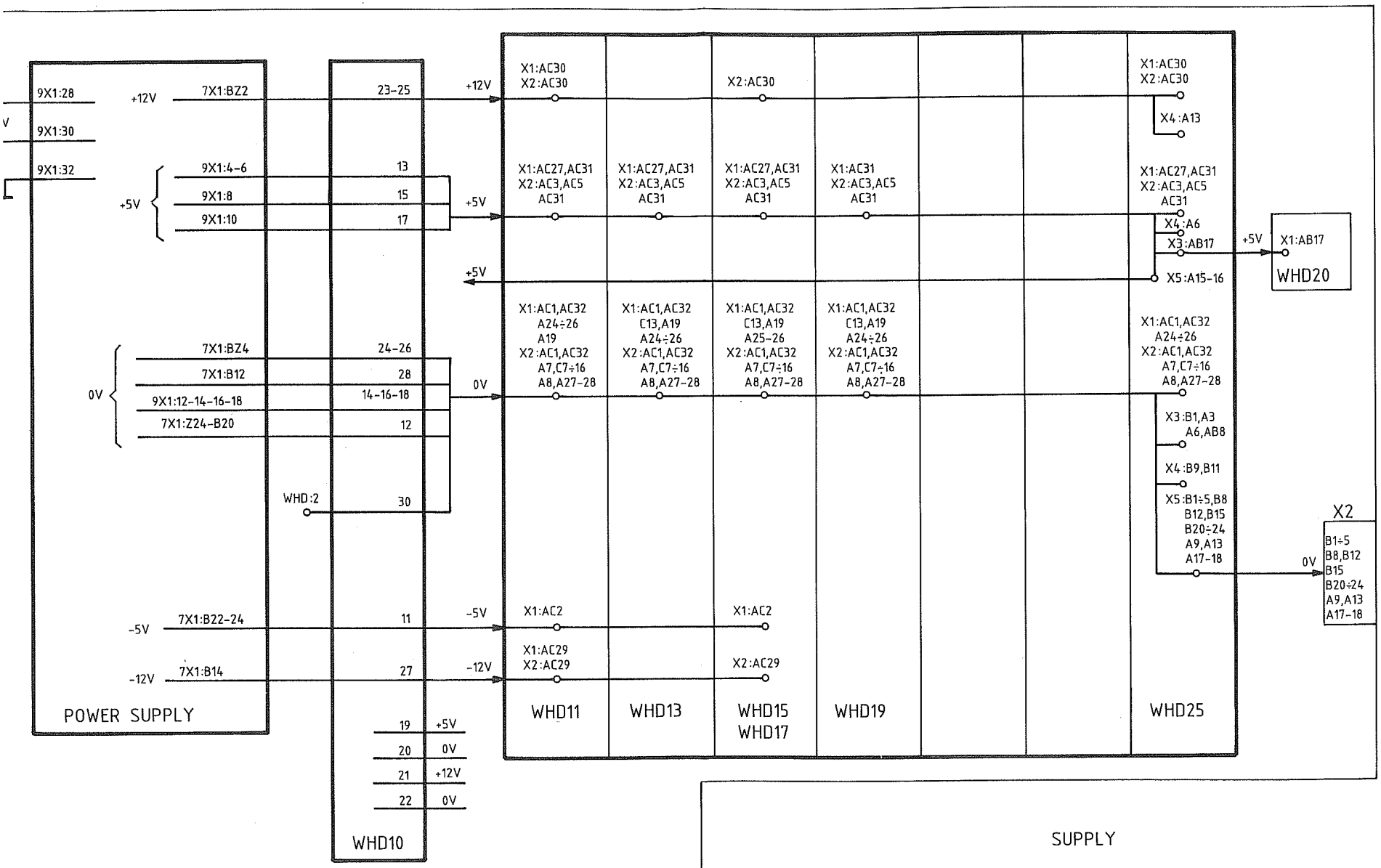
POWER SUPPLY
9X1:28
9X1:30
9X1:32
+12V
7X1:BZ2
+5V
9X1:4-6
9X1:8
9X1:10
0V
7X1:BZ4
7X1:B12
9X1:12-14-16-18
7X1:Z24-B20
-5V
7X1:B22-24
-12V
7X1:B14
WHD:2
WHD10
23-25
13
15
17
24-26
28
14-16-18
12
30
11
27
19 +5V
20 0V
21 +12V
22 0V
X1:AC30
X2:AC30
X2:AC30
X4:A13
X1:AC27,AC31
X2:AC3,AC5
AC31
X4:A6
X3:AB17
X5:A15-16
X1:AB17
WHD20
X1:AC1,AC32
A24÷26
A19
X2:AC1,AC32
A7,C7÷16
A8,A27-28
C13,A19
A25-26
X3:B1,A3
A6,AB8
X4:B9,B11
X5:B1÷5,B8
B12,B15
B20÷24
A9,A13
A17-18
X2
B1÷5
B8,B12
B15
B20÷24
A9,A13
A17-18
X1:AC2
X1:AC29
X2:AC29
WHD11
WHD13
WHD15
WHD17
WHD19
WHD25
SUPPLY

Section z

Scopofix MDPM

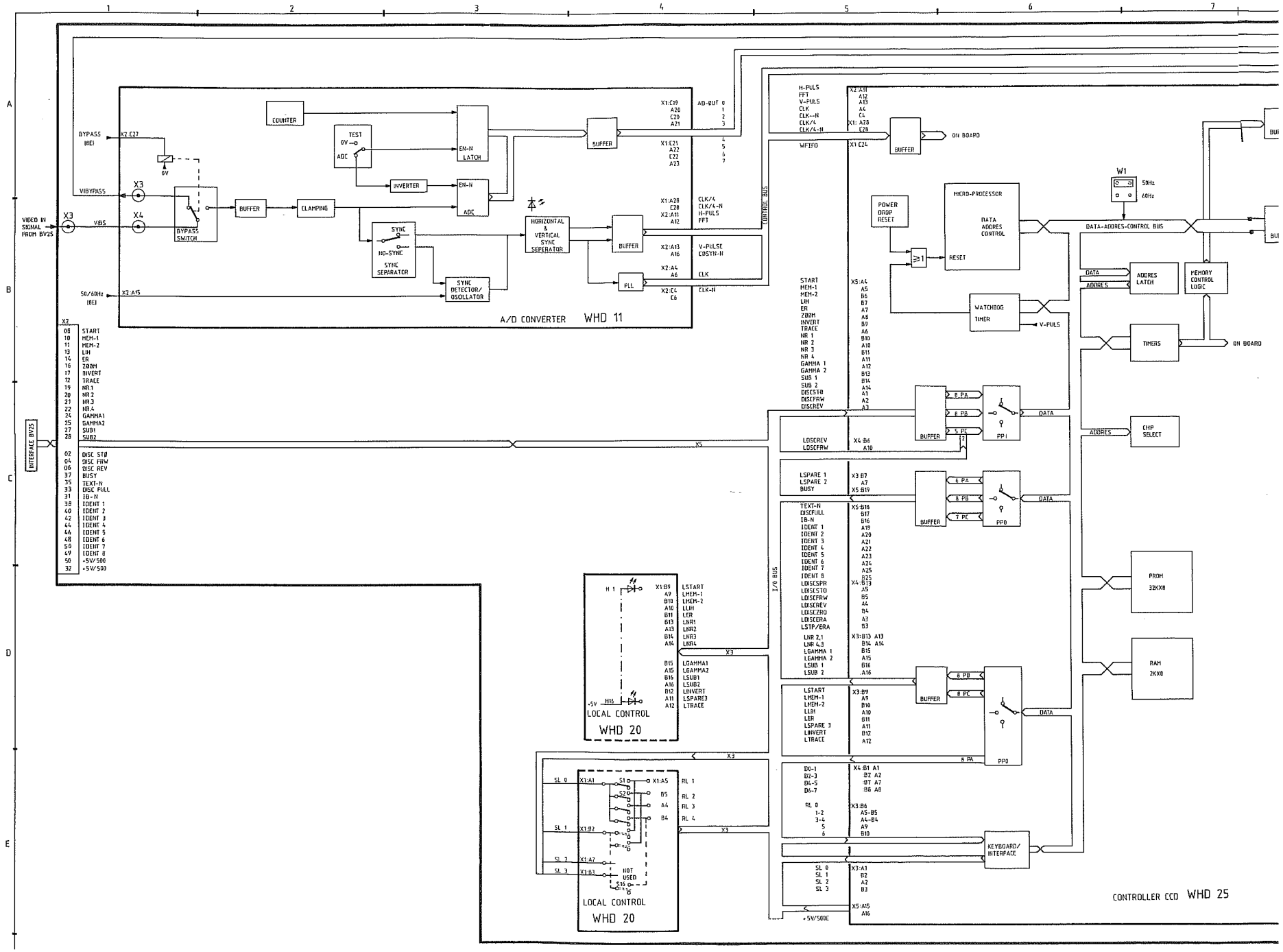

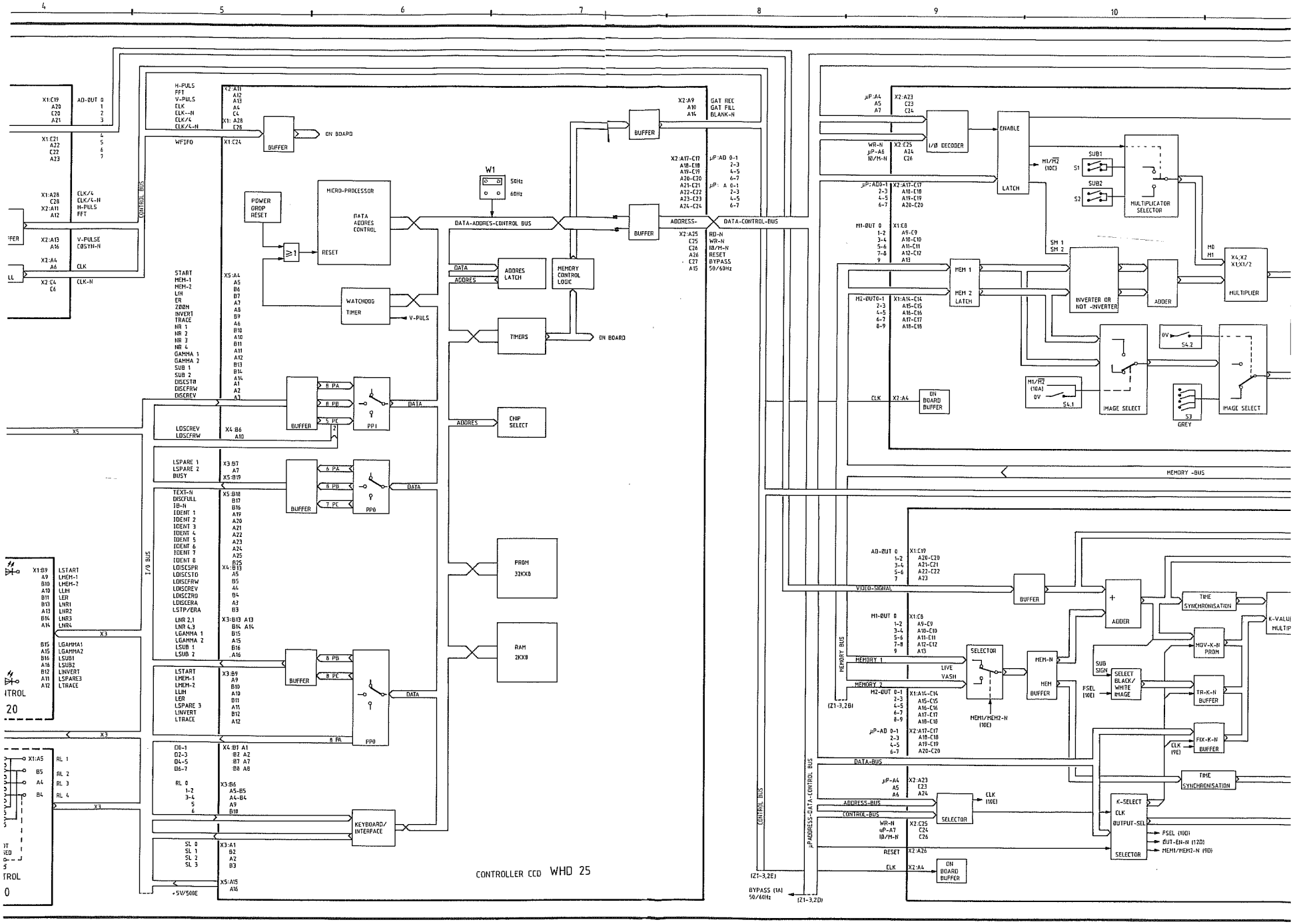
CONTROLLER CCD WHD 25
MICRO-PROCESSOR
DATA ADDRES CONTROL
RESET
POWER DROP RESET
WATCHDOG TIMER
DATA-ADDRES-CONTROL BUS
DATA-CONTROL-BUS
ADDRES LATCH
MEMORY CONTROL LOGIC
TIMERS
CHIP SELECT
PROM 32KX8
RAM 2KX8
PPI
PPO
KEYBOARD/ INTERFACE
BUFFER
ON BOARD
W1
50Hz
60Hz
I/O DECODER
ENABLE
LATCH
MULTIPLICATOR SELECTOR
INVERTER OR NOT -INVERTER
ADDER
MULTIPLIER
IMAGE SELECT
MEM 1
MEM 2 LATCH
ON BOARD BUFFER
MEMORY -BUS
VIDEO-SIGNAL
TIME SYNCHRONISATION
MOV-K-N PROM
TR-K-N BUFFER
FIX-K-N BUFFER
SELECTOR
MEM-N
MEM BUFFER
SELECT BLACK/ WHITE IMAGE
K-SELECT
OUTPUT-SEL
CONTROL BUS
I/O BUS
MEMORY BUS
µP-ADDRESS-DATA-CONTROL BUS
BYPASS (1A) 50/60Hz

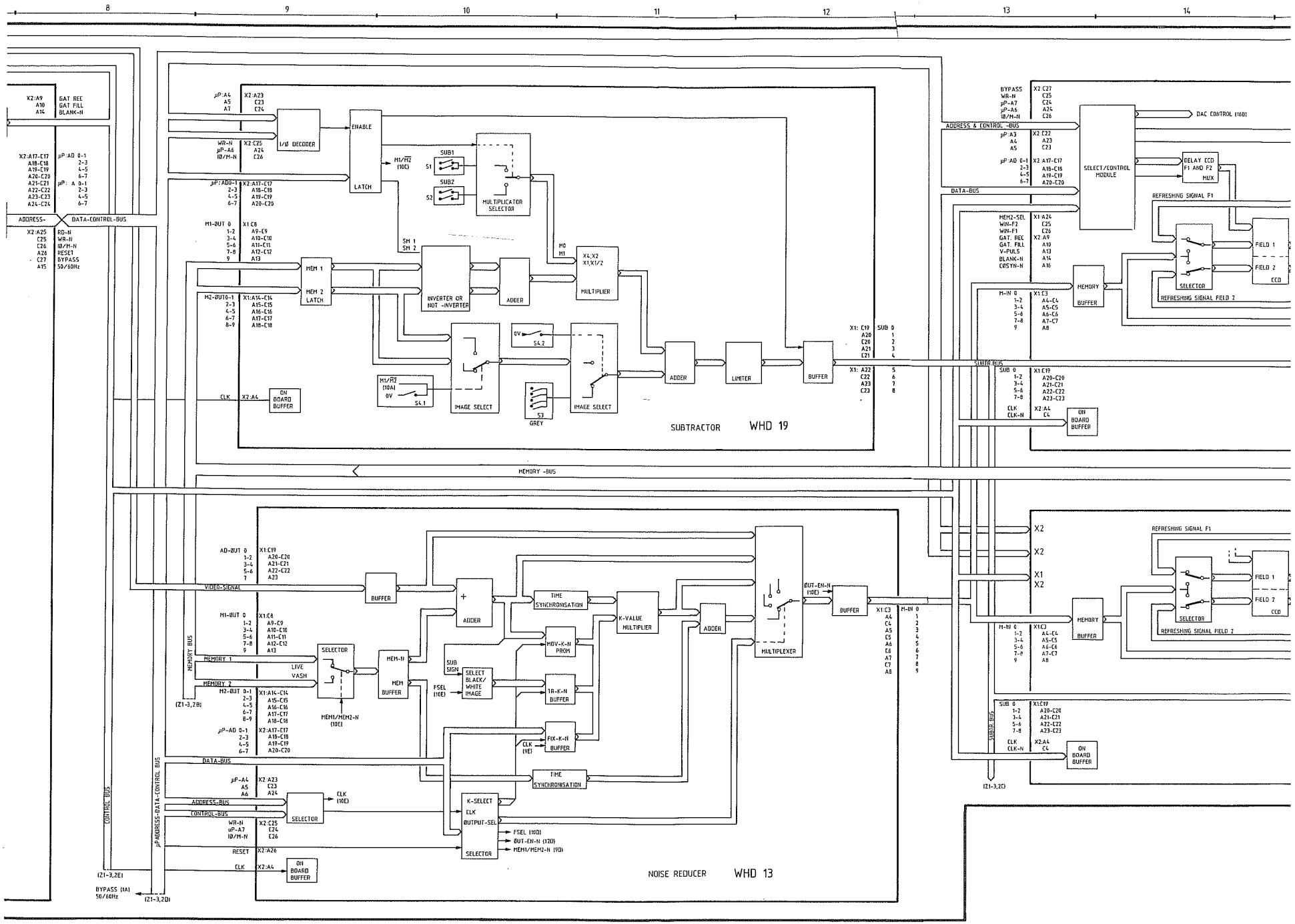
8
9
10
11
12
13
14
SUBTRACTOR WHD 19
NOISE REDUCER WHD 13
I/Ø DECODER
ENABLE
LATCH
MULTIPLICATOR SELECTOR
MEM 1
MEM 2
LATCH
INVERTER OR NOT -INVERTER
ADDER
MULTIPLIER
IMAGE SELECT
LIMITER
BUFFER
ON BOARD BUFFER
SELECT/CONTROL MODULE
DELAY CCD F1 AND F2 MUX
MEMORY BUFFER
SELECTOR
FIELD 1
FIELD 2
CCD
REFRESHING SIGNAL F1
REFRESHING SIGNAL FIELD 2
DAC CONTROL (16B)
ADDRESS & CONTROL -BUS
DATA-BUS
SUBTRACTOR BUS
MEMORY -BUS
VIDEO-SIGNAL
MEMORY 1
MEMORY 2
LIVE
VASH
MEM-N
MEM BUFFER
TIME SYNCHRONISATION
K-VALUE MULTIPLIER
MOV-K-N PROM
TR-K-N BUFFER
FIX-K-N BUFFER
SELECT BLACK/ WHITE IMAGE
MULTIPLEXER
K-SELECT
OUTPUT-SEL
ADDRESS-BUS
CONTROL-BUS
CONTROL BUS
µP-ADDRESS-DATA-CONTROL BUS
BYPASS (1A) 50/60Hz

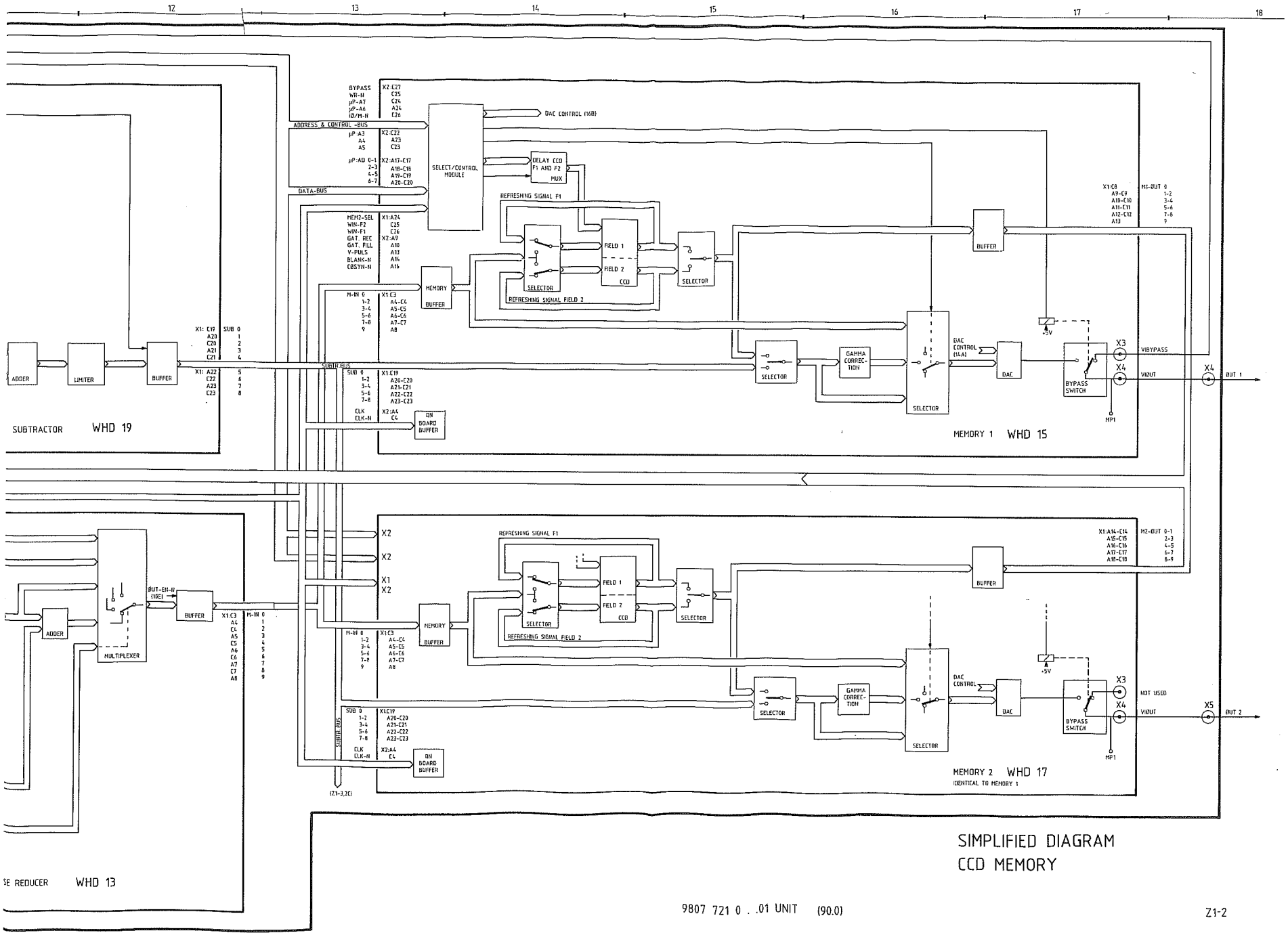

SIMPLIFIED DIAGRAM
CCD MEMORY

Section z

Scopofix MDP

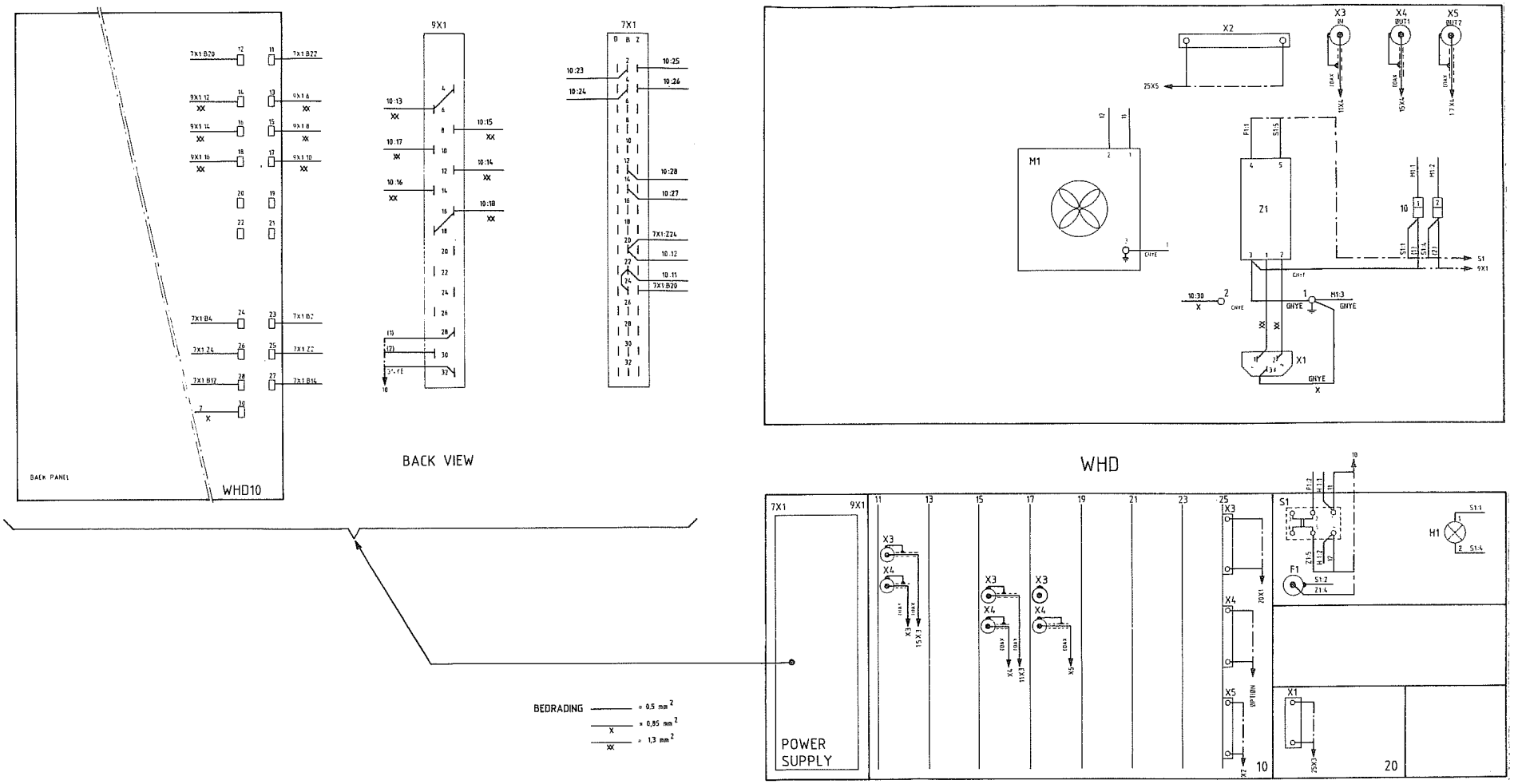

WIRING-RACK+
CONNECTOR LOCATIONS

FRONT VIEW
BACK PANEL

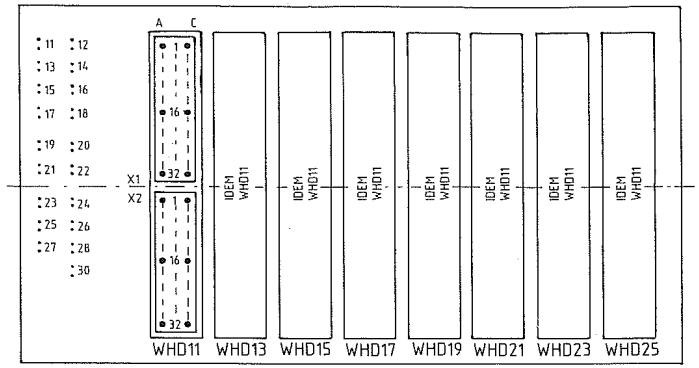

SEQUENCE OF CONNECTORPOINTS

WHD10:11	-5V
WHD10:12	0V
WHD10:13	+5V
WHD10:14	0V
WHD10:15	+5V
WHD10:16	0V
WHD10:17	+5V
WHD10:18	0V
WHD10:19	+5V
WHD10:20	0V
WHD10:21	+12V
WHD10:22	0V
WHD10:23	+12V
WHD10:24	0V
WHD10:25	+12V
WHD10:26	0V
WHD10:27	-12V
WHD10:28	0V
WHD10:30	0V
WHD11X1:A1	0V
WHD11X1:A2	-5V
WHD11X1:A3	SPARE 0
WHD11X1:C1	0V
WHD11X1:C2	-5V
WHD11X1:A20	AD-OUT 1
WHD11X1:A21	AD-OUT 3
WHD11X1:A22	AD-OUT 5
WHD11X1:A23	AD-OUT 7
WHD11X1:A24	0V
WHD11X1:A25	0V
WHD11X1:A26	0V
WHD11X1:A27	+5V
WHD11X1:A28	CLK/4
WHD11X1:A29	-12V
WHD11X1:A30	+12V
WHD11X1:A31	+5V
WHD11X1:A32	0V
WHD11X1:C19	AD-OUT 0
WHD11X1:C20	AD-OUT 2
WHD11X1:C21	AD-OUT 4
WHD11X1:C22	AD-OUT 6
WHD11X1:C24	SPARE 6
WHD11X1:C27	+5V
WHD11X1:C28	CLK/4-N
WHD11X1:C29	-12V
WHD11X1:C30	+12V
WHD11X1:C31	+5V
WHD11X1:C32	0V
WHD11X2:A1	0V
WHD11X2:A2	SPARE 1
WHD11X2:A3	+5V
WHD11X2:A4	CLK
WHD11X2:A5	+5V
WHD11X2:A6	SPARE 3
WHD11X2:A7	0V
WHD11X2:A8	0V
WHD11X2:C1	0V
WHD11X2:C2	SPARE 2
WHD11X2:C3	+5V
WHD11X2:C4	CLK-N
WHD11X2:C5	+5V
WHD11X2:C6	SPARE 4
WHD11X2:C7	0V
WHD11X2:C8	0V
WHD11X2:C9	0V
WHD11X2:A11	H PULS
WHD11X2:A12	FFT
WHD11X2:A13	V PULS
WHD11X2:A15	50HZ
WHD11X2:A16	COSYN-N
WHD11X2:A27	0V
WHD11X2:A28	0V
WHD11X2:A29	-12V
WHD11X2:A30	+12V
WHD11X2:A31	+5V
WHD11X2:A32	0V
WHD11X2:C10	0V
WHD11X2:C11	0V
WHD11X2:C12	0V
WHD11X2:C13	0V
WHD11X2:C14	0V
WHD11X2:C15	0V
WHD11X2:C16	0V
WHD11X2:C27	BYPASS
WHD11X2:C28	SPARE 5
WHD11X2:C29	-12V
WHD11X2:C30	+12V
WHD11X2:C31	+5V
WHD11X2:C32	0V
WHD13X1:A1	0V
WHD13X1:A2	-5V
WHD13X1:A3	SPARE 0
WHD13X1:A4	M-IN 1
WHD13X1:A5	M-IN 3
WHD13X1:A6	M-IN 5
WHD13X1:A7	M-IN 7
WHD13X1:A8	M-IN 9
WHD13X1:A9	M1-OUT 1
WHD13X1:C1	0V
WHD13X1:C2	-5V
WHD13X1:C3	M-IN 0
WHD13X1:C4	M-IN 2
WHD13X1:C5	M-IN 4
WHD13X1:C6	M-IN 6
WHD13X1:C7	M-IN 8
WHD13X1:C8	M1-OUT 0
WHD13X1:C9	M1-OUT 2
WHD13X1:A10	M1-OUT 3
WHD13X1:A11	M1-OUT 5
WHD13X1:A12	M1-OUT 7
WHD13X1:A13	M1-OUT 9
WHD13X1:A14	M2-OUT 0
WHD13X1:A15	M2-OUT 2
WHD13X1:A16	M2-OUT 4
WHD13X1:A17	M2-OUT 6
WHD13X1:A18	M2-OUT 8
WHD13X1:A19	0V
WHD13X1:A20	AD-OUT 1
WHD13X1:A21	AD-OUT 3
WHD13X1:A22	AD-OUT 5
WHD13X1:A23	AD-OUT 7
WHD13X1:A24	0V
WHD13X1:A25	0V
WHD13X1:A26	0V
WHD13X1:A27	+5V
WHD13X1:A28	CLK/4
WHD13X1:A29	-12V
WHD13X1:A30	+12V
WHD13X1:A31	+5V
WHD13X1:A32	0V
WHD13X1:C10	M1-OUT 4
WHD13X1:C11	M1-OUT 6
WHD13X1:C12	M1-OUT 8
WHD13X1:C13	0V
WHD13X1:C14	M2-OUT 1
WHD13X1:C15	M2-OUT 3
WHD13X1:C16	M2-OUT 5
WHD13X1:C17	M2-OUT 7
WHD13X1:C18	M2-OUT 9
WHD13X1:C19	AD-OUT 0
WHD13X1:C20	AD-OUT 2
WHD13X1:C21	AD-OUT 4
WHD13X1:C22	AD-OUT 6
WHD13X1:C24	SPARE 6
WHD13X1:C27	+5V
WHD13X1:C28	CLK/4-N
WHD13X1:C29	-12V
WHD13X1:C30	+12V
WHD13X1:C31	+5V
WHD13X1:C32	0V
WHD13X2:A1	0V
WHD13X2:A2	SPARE 1
WHD13X2:A3	+5V
WHD13X2:A4	CLK
WHD13X2:A5	+5V
WHD13X2:A6	SPARE 3
WHD13X2:A7	0V
WHD13X2:A8	0V
WHD13X2:C1	0V
WHD13X2:C2	SPARE 2
WHD13X2:C3	+5V
WHD13X2:C4	CLK-N
WHD13X2:C5	+5V
WHD13X2:C6	SPARE 4
WHD13X2:C7	0V
WHD13X2:C8	0V
WHD13X2:C9	0V
WHD13X2:A11	H PULS
WHD13X2:A12	FFT
WHD13X2:A13	V PULS
WHD13X2:A15	50HZ
WHD13X2:A16	COSYN-N
WHD13X2:A17	UP-AD 0
WHD13X2:A18	UP-AD 2
WHD13X2:A19	UP-AD 4
WHD13X2:A20	UP-AD 6
WHD13X2:A21	UP-A0
WHD13X2:A22	UP-A2
WHD13X2:A23	UP-A4
WHD13X2:A24	UP-A6
WHD13X2:A25	RD-N
WHD13X2:A26	RESET
WHD13X2:A27	0V
WHD13X2:A28	0V
WHD13X2:A29	-12V
WHD13X2:A30	+12V
WHD13X2:A31	+5V
WHD13X2:A32	0V
WHD13X2:C10	0V
WHD13X2:C11	0V
WHD13X2:C12	0V
WHD13X2:C13	0V
WHD13X2:C14	0V
WHD13X2:C15	0V
WHD13X2:C16	0V
WHD13X2:C17	UP-AD 1
WHD13X2:C18	UP-AD 3
WHD13X2:C19	UP-AD 5
WHD13X2:C20	UP-AD 7
WHD13X2:C21	UP-A1
WHD13X2:C22	UP-A3
WHD13X2:C23	UP-A5
WHD13X2:C24	UP-A7
WHD13X2:C25	WR-N
WHD13X2:C26	IO/M-N
WHD13X2:C27	BYPASS
WHD13X2:C28	SPARE 5
WHD13X2:C29	-12V
WHD13X2:C30	+12V
WHD13X2:C31	+5V
WHD13X2:C32	0V
WHD15X1:A1	0V
WHD15X1:A2	-5V
WHD15X1:A3	SPARE 0
WHD15X1:A4	M-IN 1
WHD15X1:A5	M-IN 3
WHD15X1:A6	M-IN 5
WHD15X1:A7	M-IN 7
WHD15X1:A8	M-IN 9
WHD15X1:A9	M1-OUT 1
WHD15X1:C1	0V
WHD15X1:C2	-5V
WHD15X1:C4	M-IN 2
WHD15X1:C5	M-IN 4
WHD15X1:C6	M-IN 6
WHD15X1:C7	M-IN 8
WHD15X1:C8	M1-OUT 0
WHD15X1:C9	M1-OUT 2
WHD15X1:A10	M1-OUT 3
WHD15X1:A11	M1-OUT 5
WHD15X1:A12	M1-OUT 7
WHD15X1:A13	M1-OUT 9
WHD15X1:A14	M2-OUT 0
WHD15X1:A15	M2-OUT 2
WHD15X1:A16	M2-OUT 4
WHD15X1:A17	M2-OUT 6
WHD15X1:A18	M2-OUT 8
WHD15X1:A19	0V
WHD15X1:A20	SUB 1
WHD15X1:A21	SUB 3
WHD15X1:A22	SUB 5
WHD15X1:A23	SUB 7
WHD15X1:A24	0V
WHD15X1:A25	0V
WHD15X1:A26	0V
WHD15X1:A27	+5V
WHD15X1:A28	CLK/4
WHD15X1:A29	-12V
WHD15X1:A30	+12V
WHD15X1:A31	+5V
WHD15X1:A32	0V
WHD15X1:C10	M1-OUT 4
WHD15X1:C11	M1-OUT 6
WHD15X1:C12	M1-OUT 8
WHD15X1:C13	0V
WHD15X1:C14	M2-OUT 1
WHD15X1:C15	M2-OUT 3
WHD15X1:C16	M2-OUT 5
WHD15X1:C17	M2-OUT 7
WHD15X1:C18	M2-OUT 9
WHD15X1:C19	SUB 0
WHD15X1:C20	SUB 2
WHD15X1:C21	SUB 4
WHD15X1:C22	SUB 6
WHD15X1:C23	SUB 8
WHD15X1:C24	SPARE 6
WHD15X1:C25	WIN-F2
WHD15X1:C26	WIN-F1
WHD15X1:C27	+5V
WHD15X1:C28	CLK/4-N
WHD15X1:C29	-12V
WHD15X1:C30	+12V
WHD15X1:C31	+5V
WHD15X1:C32	0V
WHD15X2:A1	0V
WHD15X2:A2	SPARE 1
WHD15X2:A3	+5V
WHD15X2:A4	CLK
WHD15X2:A5	+5V
WHD15X2:A6	SPARE 3
WHD15X2:A7	0V
WHD15X2:A8	0V
WHD15X2:A9	GAT.REC
WHD15X2:C1	0V
WHD15X2:C2	SPARE 2
WHD15X2:C3	+5V
WHD15X2:C4	CLK-N
WHD15X2:C5	+5V
WHD15X2:C6	SPARE 4
WHD15X2:C7	0V
WHD15X2:C8	0V
WHD15X2:C9	0V
WHD15X2:A10	GAT.FILL
WHD15X2:A11	H PULS
WHD15X2:A12	FFT
WHD15X2:A13	V PULS
WHD15X2:A14	BLANK-N
WHD15X2:A15	50HZ
WHD15X2:A16	COSYN-N
WHD15X2:A17	UP-AD 0
WHD15X2:A18	UP-AD 2
WHD15X2:A19	UP-AD 4
WHD15X2:A20	UP-AD 6
WHD15X2:A21	UP-A0
WHD15X2:A22	UP-A2
WHD15X2:A23	UP-A4
WHD15X2:A24	UP-A6
WHD15X2:A25	RD-N
WHD15X2:A26	RESET
WHD15X2:A27	0V
WHD15X2:A28	0V
WHD15X2:A29	-12V
WHD15X2:A30	+12V
WHD15X2:A31	+5V
WHD15X2:A32	0V
WHD15X2:C10	0V
WHD15X2:C11	0V
WHD15X2:C12	0V
WHD15X2:C13	0V
WHD15X2:C14	0V
WHD15X2:C15	0V
WHD15X2:C16	0V
WHD15X2:C17	UP-AD 1
WHD15X2:C18	UP-AD 3
WHD15X2:C19	UP-AD 5
WHD15X2:C20	UP-AD 7
WHD15X2:C21	UP-A1
WHD15X2:C22	UP-A3
WHD15X2:C23	UP-A5
WHD15X2:C24	UP-A7
WHD15X2:C25	WR-N
WHD15X2:C26	IO/M-N
WHD15X2:C27	BYPASS
WHD15X2:C28	SPARE 5
WHD15X2:C29	-12V
WHD15X2:C30	+12V
WHD15X2:C31	+5V
WHD15X2:C32	0V
WHD17X1:A1	0V
WHD17X1:A2	-5V
WHD17X1:A3	SPARE 0
WHD17X1:A4	M-IN 1
WHD17X1:A5	M-IN 3
WHD17X1:A6	M-IN 5
WHD17X1:A7	M-IN 7
WHD17X1:A8	M-IN 9
WHD17X1:A9	M1-OUT 1
WHD17X1:C1	0V
WHD17X1:C2	-5V
WHD17X1:C3	M-IN 0
WHD17X1:C4	M-IN 2
WHD17X1:C5	M-IN 4
WHD17X1:C6	M-IN 6
WHD17X1:C7	M-IN 8
WHD17X1:C8	M1-OUT 0
WHD17X1:C9	M1-OUT 2
WHD17X1:A10	M1-OUT 3
WHD17X1:A11	M1-OUT 5
WHD17X1:A12	M1-OUT 7
WHD17X1:A13	M1-OUT 9
WHD17X1:A14	M2-OUT 0
WHD17X1:A15	M2-OUT 2
WHD17X1:A16	M2-OUT 4
WHD17X1:A17	M2-OUT 6
WHD17X1:A18	M2-OUT 8
WHD17X1:A19	0V
WHD17X1:A20	SUB 1
WHD17X1:A21	SUB 3
WHD17X1:A22	SUB 5
WHD17X1:A23	SUB 7
WHD17X1:A25	0V
WHD17X1:A26	0V
WHD17X1:A27	+5V
WHD17X1:A28	CLK/4
WHD17X1:A29	-12V
WHD17X1:A30	+12V
WHD17X1:A31	+5V
WHD17X1:A32	0V
WHD17X1:C10	M1-OUT 4
WHD17X1:C11	M1-OUT 6
WHD17X1:C12	M1-OUT 8
WHD17X1:C13	0V
WHD17X1:C14	M2-OUT 1
WHD17X1:C15	M2-OUT 3
WHD17X1:C16	M2-OUT 5
WHD17X1:C17	M2-OUT 7
WHD17X1:C18	M2-OUT 9
WHD17X1:C19	SUB 0
WHD17X1:C20	SUB 2
WHD17X1:C21	SUB 4
WHD17X1:C22	SUB 6
WHD17X1:C23	SUB 8
WHD17X1:C24	SPARE 6
WHD17X1:C25	WIN-F2
WHD17X1:C26	WIN-F1
WHD17X1:C27	+5V
WHD17X1:C28	CLK/4-N
WHD17X1:C29	-12V
WHD17X1:C30	+12V
WHD17X1:C31	+5V
WHD17X1:C32	0V
WHD17X2:A1	0V
WHD17X2:A2	SPARE 1
WHD17X2:A3	+5V
WHD17X2:A4	CLK
WHD17X2:A5	+5V
WHD17X2:A6	SPARE 3
WHD17X2:A7	0V
WHD17X2:A8	0V
WHD17X2:A9	GAT.REC
WHD17X2:C1	0V
WHD17X2:C2	SPARE 2
WHD17X2:C3	+5V
WHD17X2:C4	CLK-N
WHD17X2:C5	+5V
WHD17X2:C6	SPARE 4
WHD17X2:C7	0V
WHD17X2:C8	0V
WHD17X2:C9	0V
WHD17X2:A10	GAT.FILL
WHD17X2:A11	H PULS
WHD17X2:A12	FFT
WHD17X2:A13	V PULS
WHD17X2:A14	BLANK-N
WHD17X2:A15	50HZ
WHD17X2:A16	COSYN-N
WHD17X2:A17	UP-AD 0
WHD17X2:A18	UP-AD 2
WHD17X2:A19	UP-AD 4
WHD17X2:A20	UP-AD 6
WHD17X2:A21	UP-A0
WHD17X2:A22	UP-A2
WHD17X2:A23	UP-A4
WHD17X2:A24	UP-A6
WHD17X2:A25	RD-N
WHD17X2:A26	RESET
WHD17X2:A27	0V
WHD17X2:A28	0V
WHD17X2:A29	-12V
WHD17X2:A30	+12V
WHD17X2:A31	+5V
WHD17X2:A32	0V
WHD17X2:C10	0V
WHD17X2:C11	0V
WHD17X2:C12	0V
WHD17X2:C13	0V
WHD17X2:C14	0V
WHD17X2:C15	0V
WHD17X2:C16	0V
WHD17X2:C17	UP-AD 1
WHD17X2:C18	UP-AD 3
WHD17X2:C19	UP-AD 5
WHD17X2:C20	UP-AD 7
WHD17X2:C21	UP-A1
WHD17X2:C22	UP-A3
WHD17X2:C23	UP-A5
WHD17X2:C24	UP-A7
WHD17X2:C25	WR-N
WHD17X2:C26	IO/M-N
WHD17X2:C27	BYPASS
WHD17X2:C28	SPARE 5
WHD17X2:C29	-12V
WHD17X2:C30	+12V
WHD17X2:C31	+5V
WHD17X2:C32	0V
WHD19X1:A1	0V
WHD19X1:A2	-5V
WHD19X1:A3	SPARE 0
WHD19X1:A4	M-IN 1
WHD19X1:A5	M-IN 3
WHD19X1:A6	M-IN 5
WHD19X1:A7	M-IN 7
WHD19X1:A8	M-IN 9
WHD19X1:A9	M1-OUT 1
WHD19X1:C1	0V
WHD19X1:C2	-5V
WHD19X1:C3	M-IN 0
WHD19X1:C4	M-IN 2
WHD19X1:C5	M-IN 4
WHD19X1:C6	M-IN 6
WHD19X1:C7	M-IN 8
WHD19X1:C8	M1-OUT 0
WHD19X1:C9	M1-OUT 2
WHD19X1:A10	M1-OUT 3
WHD19X1:A11	M1-OUT 5
WHD19X1:A12	M1-OUT 7
WHD19X1:A13	M1-OUT 9
WHD19X1:A14	M2-OUT 0
WHD19X1:A15	M2-OUT 2
WHD19X1:A16	M2-OUT 4
WHD19X1:A17	M2-OUT 6
WHD19X1:A18	M2-OUT 8
WHD19X1:A19	0V
WHD19X1:A20	SUB 1
WHD19X1:A21	SUB 3
WHD19X1:A22	SUB 5
WHD19X1:A23	SUB 7
WHD19X1:A24	0V
WHD19X1:A25	0V
WHD19X1:A26	0V
WHD19X1:A27	+5V
WHD19X1:A28	CLK/4
WHD19X1:A29	-12V
WHD19X1:A30	+12V
WHD19X1:A31	+5V
WHD19X1:A32	0V
WHD19X1:C10	M1-OUT 4
WHD19X1:C11	M1-OUT 6
WHD19X1:C12	M1-OUT 8
WHD19X1:C13	0V
WHD19X1:C14	M2-OUT 1
WHD19X1:C15	M2-OUT 3
WHD19X1:C16	M2-OUT 5
WHD19X1:C17	M2-OUT 7
WHD19X1:C18	M2-OUT 9
WHD19X1:C19	SUB 0
WHD19X1:C20	SUB 2
WHD19X1:C21	SUB 4
WHD19X1:C22	SUB 6
WHD19X1:C23	SUB 8
WHD19X1:C24	SPARE 6
WHD19X1:C25	WIN-F2
WHD19X1:C26	WIN-F1
WHD19X1:C27	+5V
WHD19X1:C28	CLK/4-N
WHD19X1:C29	-12V
WHD19X1:C30	+12V
WHD19X1:C31	+5V
WHD19X1:C32	0V
WHD19X2:A1	0V
WHD19X2:A2	SPARE 1
WHD19X2:A3	+5V
WHD19X2:A4	CLK
WHD19X2:A5	+5V
WHD19X2:A6	SPARE 3
WHD19X2:A7	0V
WHD19X2:A8	0V
WHD19X2:A9	GAT.REC
WHD19X2:C1	0V
WHD19X2:C2	SPARE 2
WHD19X2:C3	+5V
WHD19X2:C4	CLK-N
WHD19X2:C5	+5V
WHD19X2:C6	SPARE 4
WHD19X2:C7	0V
WHD19X2:C8	0V
WHD19X2:C9	0V
WHD19X2:A10	GAT.FILL
WHD19X2:A11	H PULS
WHD19X2:A12	FFT
WHD19X2:A13	V PULS
WHD19X2:A14	BLANK-N
WHD19X2:A15	50HZ
WHD19X2:A17	UP-AD 0
WHD19X2:A18	UP-AD 2
WHD19X2:A19	UP-AD 4
WHD19X2:A20	UP-AD 6
WHD19X2:A21	UP-A0
WHD19X2:A22	UP-A2
WHD19X2:A23	UP-A4
WHD19X2:A24	UP-A6
WHD19X2:A25	RD-N
WHD19X2:A26	RESET
WHD19X2:A27	0V
WHD19X2:A28	0V
WHD19X2:A29	-12V
WHD19X2:A30	+12V
WHD19X2:A31	+5V
WHD19X2:A32	0V
WHD19X2:C10	0V
WHD19X2:C11	0V
WHD19X2:C12	0V
WHD19X2:C13	0V
WHD19X2:C14	0V
WHD19X2:C15	0V
WHD19X2:C16	0V
WHD19X2:C17	UP-AD 1
WHD19X2:C18	UP-AD 3
WHD19X2:C19	UP-AD 5
WHD19X2:C20	UP-AD 7
WHD19X2:C21	UP-A1
WHD19X2:C22	UP-A3
WHD19X2:C23	UP-A5
WHD19X2:C24	UP-A7
WHD19X2:C25	WR-N
WHD19X2:C26	IO/M-N
WHD19X2:C27	BYPASS
WHD19X2:C28	SPARE 5
WHD19X2:C29	-12V
WHD19X2:C30	+12V
WHD19X2:C31	+5V
WHD19X2:C32	0V
WHD21X1:A1	0V
WHD21X1:A2	-5V
WHD21X1:A3	SPARE 0
WHD21X1:A4	M-IN 1
WHD21X1:A5	M-IN 3
WHD21X1:A6	M-IN 5
WHD21X1:A7	M-IN 7
WHD21X1:A8	M-IN 9
WHD21X1:A9	M1-OUT 1
WHD21X1:C1	0V
WHD21X1:C2	-5V
WHD21X1:C3	M-IN 0
WHD21X1:C4	M-IN 2
WHD21X1:C5	M-IN 4
WHD21X1:C6	M-IN 6
WHD21X1:C7	M-IN 8
WHD21X1:C8	M1-OUT 0
WHD21X1:C9	M1-OUT 2
WHD21X1:A10	M1-OUT 3
WHD21X1:A11	M1-OUT 5
WHD21X1:A12	M1-OUT 7
WHD21X1:A13	M1-OUT 9
WHD21X1:A14	M2-OUT 0
WHD21X1:A15	M2-OUT 2
WHD21X1:A16	M2-OUT 4
WHD21X1:A17	M2-OUT 6
WHD21X1:A18	M2-OUT 8
WHD21X1:A19	0V
WHD21X1:A20	SUB 1
WHD21X1:A21	SUB 3
WHD21X1:A22	SUB 5
WHD21X1:A23	SUB 7
WHD21X1:A24	0V
WHD21X1:A25	0V
WHD21X1:A26	0V
WHD21X1:A27	+5V
WHD21X1:A28	CLK/4
WHD21X1:A29	-12V
WHD21X1:A30	+12V
WHD21X1:A31	+5V
WHD21X1:A32	0V
WHD21X1:C10	M1-OUT 4
WHD21X1:C11	M1-OUT 6
WHD21X1:C12	M1-OUT 8
WHD21X1:C13	0V
WHD21X1:C14	M2-OUT 1
WHD21X1:C15	M2-OUT 3
WHD21X1:C16	M2-OUT 5
WHD21X1:C17	M2-OUT 7
WHD21X1:C18	M2-OUT 9
WHD21X1:C19	SUB 0
WHD21X1:C20	SUB 2
WHD21X1:C21	SUB 4
WHD21X1:C22	SUB 6
WHD21X1:C23	SUB 8
WHD21X1:C24	WFIFO-N
WHD21X1:C25	WIN-F2
WHD21X1:C26	WIN-F1
WHD21X1:C27	+5V
WHD21X1:C28	CLK/4-N
WHD21X1:C29	-12V
WHD21X1:C30	+12V
WHD21X1:C31	+5V
WHD21X1:C32	0V
WHD21X2:A1	0V
WHD21X2:A2	SPARE 1
WHD21X2:A3	+5V
WHD21X2:A4	CLK
WHD21X2:A5	+5V
WHD21X2:A6	SPARE 3
WHD21X2:A7	0V
WHD21X2:A8	0V
WHD21X2:A9	GAT.REC
WHD21X2:C1	0V
WHD21X2:C2	SPARE 2
WHD21X2:C3	+5V
WHD21X2:C4	CLK-N
WHD21X2:C5	+5V
WHD21X2:C6	SPARE 4
WHD21X2:C7	0V
WHD21X2:C8	0V
WHD21X2:C9	0V
WHD21X2:A10	GAT.FILL
WHD21X2:A11	H PULS
WHD21X2:A12	FFT
WHD21X2:A13	V PULS
WHD21X2:A14	BLANK-N
WHD21X2:A15	50HZ
WHD21X2:A17	UP-AD 0
WHD21X2:A18	UP-AD 2
WHD21X2:A19	UP-AD 4
WHD21X2:A20	UP-AD 6
WHD21X2:A21	UP-A0
WHD21X2:A22	UP-A2
WHD21X2:A23	UP-A4
WHD21X2:A24	UP-A6
WHD21X2:A25	RD-N
WHD21X2:A26	RESET
WHD21X2:A27	0V
WHD21X2:A28	0V
WHD21X2:A29	-12V
WHD21X2:A30	+12V
WHD21X2:A31	+5V
WHD21X2:A32	0V
WHD21X2:C10	0V
WHD21X2:C11	0V
WHD21X2:C12	0V
WHD21X2:C13	0V
WHD21X2:C14	0V
WHD21X2:C15	0V
WHD21X2:C16	0V
WHD21X2:C17	UP-AD 1
WHD21X2:C18	UP-AD 3
WHD21X2:C19	UP-AD 5
WHD21X2:C20	UP-AD 7
WHD21X2:C21	UP-A1
WHD21X2:C22	UP-A3
WHD21X2:C23	UP-A5
WHD21X2:C24	UP-A7
WHD21X2:C25	WR-N
WHD21X2:C26	IO/M-N
WHD21X2:C27	BYPASS
WHD21X2:C28	SPARE 5
WHD21X2:C29	-12V
WHD21X2:C30	+12V
WHD21X2:C31	+5V
WHD21X2:C32	0V
WHD23X1:A1	0V
WHD23X1:A2	-5V
WHD23X1:A3	SPARE 0
WHD23X1:A4	M-IN 1
WHD23X1:A5	M-IN 3
WHD23X1:A6	M-IN 5
WHD23X1:A7	M-IN 7
WHD23X1:A8	M-IN 9
WHD23X1:A9	M1-OUT 1
WHD23X1:C1	0V
WHD23X1:C2	-5V
WHD23X1:C3	M-IN 0
WHD23X1:C4	M-IN 2
WHD23X1:C5	M-IN 4
WHD23X1:C6	M-IN 6
WHD23X1:C7	M-IN 8
WHD23X1:C8	M1-OUT 0
WHD23X1:C9	M1-OUT 2
WHD23X1:A10	M1-OUT 3
WHD23X1:A11	M1-OUT 5
WHD23X1:A12	M1-OUT 7
WHD23X1:A13	M1-OUT 9
WHD23X1:A14	M2-OUT 0
WHD23X1:A15	M2-OUT 2
WHD23X1:A16	M2-OUT 4
WHD23X1:A17	M2-OUT 6
WHD23X1:A18	M2-OUT 8
WHD23X1:A20	SUB 1
WHD23X1:A21	SUB 3
WHD23X1:A22	SUB 5

```
      | WHD13X2:C21  UP-A1      | WHD15X1:A31  +5V
      | WHD13X2:C22  UP-A3      | WHD15X1:A32  0V
E 1   | WHD13X2:C23  UP-A5      | WHD15X1:C10  M1-OUT 4
      | WHD13X2:C24  UP-A7      | WHD15X1:C11  M1-OUT 6
      | WHD13X2:C25  WR-N       | WHD15X1:C12  M1-OUT 8
      | WHD13X2:C26  IO/M-N     | WHD15X1:C13  0V
E 3   | WHD13X2:C27  BYPASS     | WHD15X1:C14  M2-OUT 1
      | WHD13X2:C28  SPARE 5    | WHD15X1:C15  M2-OUT 3
      | WHD13X2:C29  -12V       | WHD15X1:C16  M2-OUT 5
      | WHD13X2:C30  +12V       | WHD15X1:C17  M2-OUT 7
E 2   | WHD13X2:C31  +5V        | WHD15X1:C18  M2-OUT 9
      | WHD13X2:C32  0V         | WHD15X1:C19  SUB 0
N     | WHD15X1:A1   0V         | WHD15X1:C20  SUB 2
      | WHD15X1:A2   -5V        | WHD15X1:C21  SUB 4
E 4   | WHD15X1:A3   SPARE 0    | WHD15X1:C22  SUB 6
      | WHD15X1:A4   M-IN 1     | WHD15X1:C23  SUB 8
      | WHD15X1:A5   M-IN 3     | WHD15X1:C24  SPARE 6
      | WHD15X1:A6   M-IN 5     | WHD15X1:C25  WIN-F2
L5    | WHD15X1:A7   M-IN 7     | WHD15X1:C26  WIN-F1
      | WHD15X1:A8   M-IN 9     | WHD15X1:C27  +5V
L5    | WHD15X1:A9   M1-OUT 1   | WHD15X1:C28  CLK/4-N
      | WHD15X1:C1   0V         | WHD15X1:C29  -12V
N-N   | WHD15X1:C2   -5V        | WHD15X1:C30  +12V
D 0   | WHD15X1:C4   M-IN 2     | WHD15X1:C31  +5V
D 2   | WHD15X1:C5   M-IN 4     | WHD15X1:C32  0V
D 4   | WHD15X1:C6   M-IN 6     | WHD15X2:A1   0V
D 6   | WHD15X1:C7   M-IN 8     | WHD15X2:A2   SPARE 1
0     | WHD15X1:C8   M1-OUT 0   | WHD15X2:A3   +5V
2     | WHD15X1:C9   M1-OUT 2   | WHD15X2:A4   CLK
4     | WHD15X1:A10  M1-OUT 3   | WHD15X2:A5   +5V
6     | WHD15X1:A11  M1-OUT 5   | WHD15X2:A6   SPARE 3
      | WHD15X1:A12  M1-OUT 7   | WHD15X2:A7   0V
T     | WHD15X1:A13  M1-OUT 9   | WHD15X2:A8   0V
      | WHD15X1:A14  M2-OUT 0   | WHD15X2:A9   GAT.REC
      | WHD15X1:A15  M2-OUT 2   | WHD15X2:C1   0V
      | WHD15X1:A16  M2-OUT 4   | WHD15X2:C2   SPARE 2
      | WHD15X1:A17  M2-OUT 6   | WHD15X2:C3   +5V
      | WHD15X1:A18  M2-OUT 8   | WHD15X2:C4   CLK-N
      | WHD15X1:A19  0V         | WHD15X2:C5   +5V
      | WHD15X1:A20  SUB 1      | WHD15X2:C6   SPARE 4
      | WHD15X1:A21  SUB 3      | WHD15X2:C7   0V
      | WHD15X1:A22  SUB 5      | WHD15X2:C8   0V
      | WHD15X1:A23  SUB 7      | WHD15X2:C9   0V
      | WHD15X1:A24  0V         | WHD15X2:A10  GAT.FILL
      | WHD15X1:A25  0V         | WHD15X2:A11  H PULS
      | WHD15X1:A26  0V         | WHD15X2:A12  FFT
D 1   | WHD15X1:A27  +5V        | WHD15X2:A13  V PULS
D 3   | WHD15X1:A28  CLK/4      | WHD15X2:A14  BLANK-N
D 5   | WHD15X1:A29  -12V       | WHD15X2:A15  50HZ
D 7   | WHD15X1:A30  +12V       | WHD15X2:A16  COSYN-N
```

```
WHD17X2:C17  UP-AD 1   | WHD19X1:A26  0V         | WHD19X2:A12  FFT
WHD17X2:C18  UP-AD 3   | WHD19X1:A27  +5V        | WHD19X2:A13  V PULS
WHD17X2:C19  UP-AD 5   | WHD19X1:A28  CLK/4      | WHD19X2:A14  BLANK-N
WHD17X2:C20  UP-AD 7   | WHD19X1:A29  -12V       | WHD19X2:A15  50HZ
WHD17X2:C21  UP-A1     | WHD19X1:A30  +12V       | WHD19X2:A17  UP-AD 0
WHD17X2:C22  UP-A3     | WHD19X1:A31  +5V        | WHD19X2:A18  UP-AD 2
WHD17X2:C23  UP-A5     | WHD19X1:A32  0V         | WHD19X2:A19  UP-AD 4
WHD17X2:C24  UP-A7     | WHD19X1:C10  M1-OUT 4   | WHD19X2:A20  UP-AD 6
WHD17X2:C25  WR-N      | WHD19X1:C11  M1-OUT 6   | WHD19X2:A21  UP-A0
WHD17X2:C26  IO/M-N    | WHD19X1:C12  M1-OUT 8   | WHD19X2:A22  UP-A2
WHD17X2:C27  BYPASS    | WHD19X1:C13  0V         | WHD19X2:A23  UP-A4
WHD17X2:C28  SPARE 5   | WHD19X1:C14  M2-OUT 1   | WHD19X2:A24  UP-A6
WHD17X2:C29  -12V      | WHD19X1:C15  M2-OUT 3   | WHD19X2:A25  RD-N
WHD17X2:C30  +12V      | WHD19X1:C16  M2-OUT 5   | WHD19X2:A26  RESET
WHD17X2:C31  +5V       | WHD19X1:C17  M2-OUT 7   | WHD19X2:A27  0V
WHD17X2:C32  0V        | WHD19X1:C18  M2-OUT 9   | WHD19X2:A28  0V
WHD19X1:A1   0V        | WHD19X1:C19  SUB 0      | WHD19X2:A29  -12V
WHD19X1:A2   -5V       | WHD19X1:C20  SUB 2      | WHD19X2:A30  +12V
WHD19X1:A3   SPARE 0   | WHD19X1:C21  SUB 4      | WHD19X2:A31  +5V
WHD19X1:A4   M-IN 1    | WHD19X1:C22  SUB 6      | WHD19X2:A32  0V
WHD19X1:A5   M-IN 3    | WHD19X1:C23  SUB 8      | WHD19X2:C10  0V
WHD19X1:A6   M-IN 5    | WHD19X1:C24  SPARE 6    | WHD19X2:C11  0V
WHD19X1:A7   M-IN 7    | WHD19X1:C25  WIN-F2     | WHD19X2:C12  0V
WHD19X1:A8   M-IN 9    | WHD19X1:C26  WIN-F1     | WHD19X2:C13  0V
WHD19X1:A9   M1-OUT 1  | WHD19X1:C27  +5V        | WHD19X2:C14  0V
WHD19X1:C1   0V        | WHD19X1:C28  CLK/4-N    | WHD19X2:C15  0V
WHD19X1:C2   -5V       | WHD19X1:C29  -12V       | WHD19X2:C16  0V
WHD19X1:C3   M-IN 0    | WHD19X1:C30  +12V       | WHD19X2:C17  UP-AD 1
WHD19X1:C4   M-IN 2    | WHD19X1:C31  +5V        | WHD19X2:C18  UP-AD 3
WHD19X1:C5   M-IN 4    | WHD19X1:C32  0V         | WHD19X2:C19  UP-AD 5
WHD19X1:C6   M-IN 6    | WHD19X2:A1   0V         | WHD19X2:C20  UP-AD 7
WHD19X1:C7   M-IN 8    | WHD19X2:A2   SPARE 1    | WHD19X2:C21  UP-A1
WHD19X1:C8   M1-OUT 0  | WHD19X2:A3   +5V        | WHD19X2:C22  UP-A3
WHD19X1:C9   M1-OUT 2  | WHD19X2:A4   CLK        | WHD19X2:C23  UP-A5
WHD19X1:A10  M1-OUT 3  | WHD19X2:A5   +5V        | WHD19X2:C24  UP-A7
WHD19X1:A11  M1-OUT 5  | WHD19X2:A6   SPARE 3    | WHD19X2:C25  WR-N
WHD19X1:A12  M1-OUT 7  | WHD19X2:A7   0V         | WHD19X2:C26  IO/M-N
WHD19X1:A13  M1-OUT 9  | WHD19X2:A8   0V         | WHD19X2:C27  BYPASS
WHD19X1:A14  M2-OUT 0  | WHD19X2:A9   GAT.REC    | WHD19X2:C28  SPARE 5
WHD19X1:A15  M2-OUT 2  | WHD19X2:C1   0V         | WHD19X2:C29  -12V
WHD19X1:A16  M2-OUT 4  | WHD19X2:C2   SPARE 2    | WHD19X2:C30  +12V
WHD19X1:A17  M2-OUT 6  | WHD19X2:C3   +5V        | WHD19X2:C31  +5V
WHD19X1:A18  M2-OUT 8  | WHD19X2:C4   CLK-N      | WHD19X2:C32  0V
WHD19X1:A19  0V        | WHD19X2:C5   +5V        | WHD21X1:A1   0V
WHD19X1:A20  SUB 1     | WHD19X2:C6   SPARE 4    | WHD21X1:A2   -5V
WHD19X1:A21  SUB 3     | WHD19X2:C7   0V         | WHD21X1:A3   SPARE 0
WHD19X1:A22  SUB 5     | WHD19X2:C8   0V         | WHD21X1:A4   M-IN 1
WHD19X1:A23  SUB 7     | WHD19X2:C9   0V         | WHD21X1:A5   M-IN 3
WHD19X1:A24  0V        | WHD19X2:A10  GAT.FILL   | WHD21X1:A6   M-IN 5
WHD19X1:A25  0V        | WHD19X2:A11  H PULS     | WHD21X1:A7   M-IN 7
```

```
WHD23X1:A23  SUB 7     | WHD23X2:A10  GAT.FILL   | WHD25X1:A24  0V
WHD23X1:A24  0V        | WHD23X2:A11  H PULS     | WHD25X1:A25  0V
WHD23X1:A25  0V        | WHD23X2:A12  FFT        | WHD25X1:A26  0V
WHD23X1:A26  0V        | WHD23X2:A13  V PULS     | WHD25X1:A27  +5V
WHD23X1:A27  +5V       | WHD23X2:A14  BLANK-N    | WHD25X1:A28  CLK/4
WHD23X1:A28  CLK/4     | WHD23X2:A15  50HZ       | WHD25X1:A29  -12V
WHD23X1:A29  -12V      | WHD23X2:A17  UP-AD 0    | WHD25X1:A30  +12V
WHD23X1:A30  +12V      | WHD23X2:A18  UP-AD 2    | WHD25X1:A31  +5V
WHD23X1:A31  +5V       | WHD23X2:A19  UP-AD 4    | WHD25X1:A32  0V
WHD23X1:A32  0V        | WHD23X2:A20  UP-AD 6    | WHD25X1:C24  WFIFO-N
WHD23X1:C10  M1-OUT 4  | WHD23X2:A21  UP-A0      | WHD25X1:C25  WIN-F2
WHD23X1:C11  M1-OUT 6  | WHD23X2:A22  UP-A2      | WHD25X1:C26  WIN-F1
WHD23X1:C12  M1-OUT 8  | WHD23X2:A23  UP-A4      | WHD25X1:C27  +5V
WHD23X1:C14  M2-OUT 1  | WHD23X2:A24  UP-A6      | WHD25X1:C28  CLK/4-N
WHD23X1:C15  M2-OUT 3  | WHD23X2:A25  RD-N       | WHD25X1:C29  -12V
WHD23X1:C16  M2-OUT 5  | WHD23X2:A26  RESET      | WHD25X1:C30  +12V
WHD23X1:C17  M2-OUT 7  | WHD23X2:A27  0V         | WHD25X1:C31  +5V
WHD23X1:C18  M2-OUT 9  | WHD23X2:A28  0V         | WHD25X1:C32  0V
WHD23X1:C19  SUB 0     | WHD23X2:A29  -12V       | WHD25X2:A1   0V
WHD23X1:C20  SUB 2     | WHD23X2:A30  +12V       | WHD25X2:A2   SPARE 1
WHD23X1:C21  SUB 4     | WHD23X2:A31  +5V        | WHD25X2:A3   +5V
WHD23X1:C22  SUB 6     | WHD23X2:A32  0V         | WHD25X2:A4   CLK
WHD23X1:C23  SUB 8     | WHD23X2:C10  0V         | WHD25X2:A5   +5V
WHD23X1:C24  WFIFO-N   | WHD23X2:C11  0V         | WHD25X2:A6   SPARE 3
WHD23X1:C25  WIN-F2    | WHD23X2:C12  0V         | WHD25X2:A7   0V
WHD23X1:C26  WIN-F1    | WHD23X2:C13  0V         | WHD25X2:A8   0V
WHD23X1:C27  +5V       | WHD23X2:C14  0V         | WHD25X2:A9   GAT.REC
WHD23X1:C28  CLK/4-N   | WHD23X2:C15  0V         | WHD25X2:C1   0V
WHD23X1:C29  -12V      | WHD23X2:C16  0V         | WHD25X2:C2   SPARE 2
WHD23X1:C30  +12V      | WHD23X2:C17  UP-AD 1    | WHD25X2:C3   +5V
WHD23X1:C31  +5V       | WHD23X2:C18  UP-AD 3    | WHD25X2:C4   CLK-N
WHD23X1:C32  0V        | WHD23X2:C19  UP-AD 5    | WHD25X2:C5   +5V
WHD23X2:A1   0V        | WHD23X2:C20  UP-AD 7    | WHD25X2:C6   SPARE 4
WHD23X2:A2   SPARE 1   | WHD23X2:C21  UP-A1      | WHD25X2:C7   0V
WHD23X2:A3   +5V       | WHD23X2:C22  UP-A3      | WHD25X2:C8   0V
WHD23X2:A4   CLK       | WHD23X2:C23  UP-A5      | WHD25X2:C9   0V
WHD23X2:A5   +5V       | WHD23X2:C24  UP-A7      | WHD25X2:A10  GAT.FILL
WHD23X2:A6   SPARE 3   | WHD23X2:C25  WR-N       | WHD25X2:A11  H PULS
WHD23X2:A7   0V        | WHD23X2:C26  IO/M-N     | WHD25X2:A12  FFT
WHD23X2:A8   0V        | WHD23X2:C27  BYPASS     | WHD25X2:A13  V PULS
WHD23X2:A9   GAT.REC   | WHD23X2:C28  SPARE 5    | WHD25X2:A14  BLANK-N
WHD23X2:C1   0V        | WHD23X2:C29  -12V       | WHD25X2:A15  50HZ
WHD23X2:C2   SPARE 2   | WHD23X2:C30  +12V       | WHD25X2:A17  UP-AD 0
WHD23X2:C3   +5V       | WHD23X2:C31  +5V        | WHD25X2:A18  UP-AD 2
WHD23X2:C4   CLK-N     | WHD23X2:C32  0V         | WHD25X2:A19  UP-AD 4
WHD23X2:C5   +5V       | WHD25X1:A1   0V         | WHD25X2:A20  UP-AD 6
WHD23X2:C6   SPARE 4   | WHD25X1:A2   -5V        | WHD25X2:A21  UP-A0
WHD23X2:C7   0V        | WHD25X1:A3   SPARE 0    | WHD25X2:A22  UP-A2
WHD23X2:C8   0V        | WHD25X1:C1   0V         | WHD25X2:A23  UP-A4
WHD23X2:C9   0V        | WHD25X1:C2   -5V        | WHD25X2:A24  UP-A6
```

```
D 0   | WHD17X1:C3   M-IN 0     | WHD17X1:C31  +5V
D 2   | WHD17X1:C4   M-IN 2     | WHD17X1:C32  0V
D 4   | WHD17X1:C5   M-IN 4     | WHD17X2:A1   0V
D 6   | WHD17X1:C6   M-IN 6     | WHD17X2:A2   SPARE 1
0     | WHD17X1:C7   M-IN 8     | WHD17X2:A3   +5V
2     | WHD17X1:C8   M1-OUT 0   | WHD17X2:A4   CLK
4     | WHD17X1:C9   M1-OUT 2   | WHD17X2:A5   +5V
6     | WHD17X1:A10  M1-OUT 3   | WHD17X2:A6   SPARE 3
      | WHD17X1:A11  M1-OUT 5   | WHD17X2:A7   0V
T     | WHD17X1:A12  M1-OUT 7   | WHD17X2:A8   0V
      | WHD17X1:A13  M1-OUT 9   | WHD17X2:A9   GAT.REC
      | WHD17X1:A14  M2-OUT 0   | WHD17X2:C1   0V
      | WHD17X1:A15  M2-OUT 2   | WHD17X2:C2   SPARE 2
      | WHD17X1:A16  M2-OUT 4   | WHD17X2:C3   +5V
      | WHD17X1:A17  M2-OUT 6   | WHD17X2:C4   CLK-N
      | WHD17X1:A18  M2-OUT 8   | WHD17X2:C5   +5V
      | WHD17X1:A19  0V         | WHD17X2:C6   SPARE 4
      | WHD17X1:A20  SUB 1      | WHD17X2:C7   0V
      | WHD17X1:A21  SUB 3      | WHD17X2:C8   0V
      | WHD17X1:A22  SUB 5      | WHD17X2:C9   0V
      | WHD17X1:A23  SUB 7      | WHD17X2:A10  GAT.FILL
      | WHD17X1:A25  0V         | WHD17X2:A11  H PULS
      | WHD17X1:A26  0V         | WHD17X2:A12  FFT
D 1   | WHD17X1:A27  +5V        | WHD17X2:A13  V PULS
D 3   | WHD17X1:A28  CLK/4      | WHD17X2:A14  BLANK-N
D 5   | WHD17X1:A29  -12V       | WHD17X2:A15  50HZ
D 7   | WHD17X1:A30  +12V       | WHD17X2:A16  COSYN-N
1     | WHD17X1:A31  +5V        | WHD17X2:A17  UP-AD 0
3     | WHD17X1:A32  0V         | WHD17X2:A18  UP-AD 2
5     | WHD17X1:C10  M1-OUT 4   | WHD17X2:A19  UP-AD 4
7     | WHD17X1:C11  M1-OUT 6   | WHD17X2:A20  UP-AD 6
      | WHD17X1:C12  M1-OUT 8   | WHD17X2:A21  UP-A0
-N    | WHD17X1:C13  0V         | WHD17X2:A22  UP-A2
SS    | WHD17X1:C14  M2-OUT 1   | WHD17X2:A23  UP-A4
E 5   | WHD17X1:C15  M2-OUT 3   | WHD17X2:A24  UP-A6
      | WHD17X1:C16  M2-OUT 5   | WHD17X2:A25  RD-N
      | WHD17X1:C17  M2-OUT 7   | WHD17X2:A26  RESET
      | WHD17X1:C18  M2-OUT 9   | WHD17X2:A27  0V
      | WHD17X1:C19  SUB 0      | WHD17X2:A28  0V
      | WHD17X1:C20  SUB 2      | WHD17X2:A29  -12V
      | WHD17X1:C21  SUB 4      | WHD17X2:A30  +12V
E 0   | WHD17X1:C22  SUB 6      | WHD17X2:A31  +5V
1     | WHD17X1:C23  SUB 8      | WHD17X2:A32  0V
3     | WHD17X1:C24  SPARE 6    | WHD17X2:C10  0V
5     | WHD17X1:C25  WIN-F2     | WHD17X2:C11  0V
7     | WHD17X1:C26  WIN-F1     | WHD17X2:C12  0V
9     | WHD17X1:C27  +5V        | WHD17X2:C13  0V
UT 1  | WHD17X1:C28  CLK/4-N    | WHD17X2:C14  0V
      | WHD17X1:C29  -12V       | WHD17X2:C15  0V
      | WHD17X1:C30  +12V       | WHD17X2:C16  0V
```

```
WHD21X1:A8   M-IN 9    | WHD21X1:C26  WIN-F1     | WHD21X2:C13  0V
WHD21X1:A9   M1-OUT 1  | WHD21X1:C27  +5V        | WHD21X2:C14  0V
WHD21X1:C1   0V        | WHD21X1:C28  CLK/4-N    | WHD21X2:C15  0V
WHD21X1:C2   -5V       | WHD21X1:C29  -12V       | WHD21X2:C16  0V
WHD21X1:C3   M-IN 0    | WHD21X1:C30  +12V       | WHD21X2:C17  UP-AD 1
WHD21X1:C4   M-IN 2    | WHD21X1:C31  +5V        | WHD21X2:C18  UP-AD 3
WHD21X1:C5   M-IN 4    | WHD21X1:C32  0V         | WHD21X2:C19  UP-AD 5
WHD21X1:C6   M-IN 6    | WHD21X2:A1   0V         | WHD21X2:C20  UP-AD 7
WHD21X1:C7   M-IN 8    | WHD21X2:A2   SPARE 1    | WHD21X2:C21  UP-A1
WHD21X1:C8   M1-OUT 0  | WHD21X2:A3   +5V        | WHD21X2:C22  UP-A3
WHD21X1:C9   M1-OUT 2  | WHD21X2:A4   CLK        | WHD21X2:C23  UP-A5
WHD21X1:A10  M1-OUT 3  | WHD21X2:A5   +5V        | WHD21X2:C24  UP-A7
WHD21X1:A11  M1-OUT 5  | WHD21X2:A6   SPARE 3    | WHD21X2:C25  WR-N
WHD21X1:A12  M1-OUT 7  | WHD21X2:A7   0V         | WHD21X2:C26  IO/M-N
WHD21X1:A13  M1-OUT 9  | WHD21X2:A8   0V         | WHD21X2:C27  BYPASS
WHD21X1:A14  M2-OUT 0  | WHD21X2:A9   GAT.REC    | WHD21X2:C28  SPARE 5
WHD21X1:A15  M2-OUT 2  | WHD21X2:C1   0V         | WHD21X2:C29  -12V
WHD21X1:A16  M2-OUT 4  | WHD21X2:C2   SPARE 2    | WHD21X2:C30  +12V
WHD21X1:A17  M2-OUT 6  | WHD21X2:C3   +5V        | WHD21X2:C31  +5V
WHD21X1:A18  M2-OUT 8  | WHD21X2:C4   CLK-N      | WHD21X2:C32  0V
WHD21X1:A19  0V        | WHD21X2:C5   +5V        | WHD23X1:A1   0V
WHD21X1:A20  SUB 1     | WHD21X2:C6   SPARE 4    | WHD23X1:A2   -5V
WHD21X1:A21  SUB 3     | WHD21X2:C7   0V         | WHD23X1:A3   SPARE 0
WHD21X1:A22  SUB 5     | WHD21X2:C8   0V         | WHD23X1:A4   M-IN 1
WHD21X1:A23  SUB 7     | WHD21X2:C9   0V         | WHD23X1:A5   M-IN 3
WHD21X1:A24  0V        | WHD21X2:A10  GAT.FILL   | WHD23X1:A6   M-IN 5
WHD21X1:A25  0V        | WHD21X2:A11  H PULS     | WHD23X1:A7   M-IN 7
WHD21X1:A26  0V        | WHD21X2:A12  FFT        | WHD23X1:A8   M-IN 9
WHD21X1:A27  +5V       | WHD21X2:A13  V PULS     | WHD23X1:A9   M1-OUT 1
WHD21X1:A28  CLK/4     | WHD21X2:A14  BLANK-N    | WHD23X1:C1   0V
WHD21X1:A29  -12V      | WHD21X2:A15  50HZ       | WHD23X1:C2   -5V
WHD21X1:A30  +12V      | WHD21X2:A17  UP-AD 0    | WHD23X1:C3   M-IN 0
WHD21X1:A31  +5V       | WHD21X2:A18  UP-AD 2    | WHD23X1:C4   M-IN 2
WHD21X1:A32  0V        | WHD21X2:A19  UP-AD 4    | WHD23X1:C5   M-IN 4
WHD21X1:C10  M1-OUT 4  | WHD21X2:A20  UP-AD 6    | WHD23X1:C6   M-IN 6
WHD21X1:C11  M1-OUT 6  | WHD21X2:A21  UP-A0      | WHD23X1:C7   M-IN 8
WHD21X1:C12  M1-OUT 8  | WHD21X2:A22  UP-A2      | WHD23X1:C8   M1-OUT 0
WHD21X1:C13  0V        | WHD21X2:A23  UP-A4      | WHD23X1:C9   M1-OUT 2
WHD21X1:C14  M2-OUT 1  | WHD21X2:A24  UP-A6      | WHD23X1:A10  M1-OUT 3
WHD21X1:C15  M2-OUT 3  | WHD21X2:A25  RD-N       | WHD23X1:A11  M1-OUT 5
WHD21X1:C16  M2-OUT 5  | WHD21X2:A26  RESET      | WHD23X1:A12  M1-OUT 7
WHD21X1:C17  M2-OUT 7  | WHD21X2:A27  0V         | WHD23X1:A13  M1-OUT 9
WHD21X1:C18  M2-OUT 9  | WHD21X2:A28  0V         | WHD23X1:A14  M2-OUT 0
WHD21X1:C19  SUB 0     | WHD21X2:A29  -12V       | WHD23X1:A15  M2-OUT 2
WHD21X1:C20  SUB 2     | WHD21X2:A30  +12V       | WHD23X1:A16  M2-OUT 4
WHD21X1:C21  SUB 4     | WHD21X2:A31  +5V        | WHD23X1:A17  M2-OUT 6
WHD21X1:C22  SUB 6     | WHD21X2:A32  0V         | WHD23X1:A18  M2-OUT 8
WHD21X1:C23  SUB 8     | WHD21X2:C10  0V         | WHD23X1:A20  SUB 1
WHD21X1:C24  WFIFO-N   | WHD21X2:C11  0V         | WHD23X1:A21  SUB 3
WHD21X1:C25  WIN-F2    | WHD21X2:C12  0V         | WHD23X1:A22  SUB 5
```

```
WHD25X2:A25  RD-N      |
WHD25X2:A26  RESET     |
WHD25X2:A27  0V        |
WHD25X2:A28  0V        |
WHD25X2:A29  -12V      |
WHD25X2:A30  +12V      |
WHD25X2:A31  +5V       |
WHD25X2:A32  0V        |
WHD25X2:C10  0V        |
WHD25X2:C11  0V        |
WHD25X2:C12  0V        |
WHD25X2:C13  0V        |
WHD25X2:C14  0V        |
WHD25X2:C15  0V        |
WHD25X2:C16  0V        |
WHD25X2:C17  UP-AD 1   |
WHD25X2:C18  UP-AD 3   |
WHD25X2:C19  UP-AD 5   |
WHD25X2:C20  UP-AD 7   |
WHD25X2:C21  UP-A1     |
WHD25X2:C22  UP-A3     |
WHD25X2:C23  UP-A5     |
WHD25X2:C24  UP-A7     |
WHD25X2:C25  WR-N      |
WHD25X2:C26  IO/M-N    |
WHD25X2:C27  BYPASS    |
WHD25X2:C28  SPARE 5   |
WHD25X2:C29  -12V      |
WHD25X2:C30  +12V      |
WHD25X2:C31  +5V       |
WHD25X2:C32  0V        |
```

SEQUENCE OF MNEMONICS

```
0V            WHD10:12    - WHD10:14    - WHD10:16    - WHD10:18    -
            - WHD10:20    - WHD10:22    - WHD10:24    - WHD10:26    -
            - WHD10:28    - WHD10:29    - WHD11X1:A1  - WHD13X1:A1  -
            - WHD15X1:A1  - WHD17X1:A1  - WHD19X1:A1  - WHD21X1:A1  -
            - WHD23X1:A1  - WHD11X1:C1  - WHD13X1:C1  - WHD15X1:C1  -
            - WHD17X1:C1  - WHD19X1:C1  - WHD21X1:C1  - WHD23X1:C1  -
            - WHD13X1:C13 - WHD15X1:C13 - WHD17X1:C13 - WHD19X1:C13 -
            - WHD21X1:C13 - WHD13X1:A19 - WHD15X1:A19 - WHD17X1:A19 -
            - WHD19X1:A19 - WHD21X1:A19 - WHD11X1:A24 - WHD13X1:A24 -
            - WHD15X1:A24 - WHD15X1:A24 - WHD21X1:A24 - WHD23X1:A24 -
            - WHD11X1:A25 - WHD13X1:A25 - WHD15X1:A25 - WHD17X1:A25 -
            - WHD19X1:A25 - WHD21X1:A25 - WHD23X1:A25 - WHD11X1:A26 -
            - WHD13X1:A26 - WHD15X1:A26 - WHD17X1:A26 - WHD19X1:A26 -
            - WHD21X1:A26 - WHD23X1:A26 - WHD11X1:A32 - WHD13X1:A32 -
            - WHD15X1:A32 - WHD17X1:A32 - WHD19X1:A32 - WHD21X1:A32 -
            - WHD23X1:A32 - WHD11X1:C32 - WHD13X1:C32 - WHD15X1:C32 -
            - WHD17X1:C32 - WHD19X1:C32 - WHD21X1:C32 - WHD23X1:C32 -
            - WHD11X2:A1  - WHD13X2:A1  - WHD15X2:A1  - WHD17X2:A1  -
            - WHD19X2:A1  - WHD21X2:A1  - WHD23X2:A1  - WHD11X2:C1  -
            - WHD13X2:C1  - WHD15X2:C1  - WHD17X2:C1  - WHD19X2:C1  -
            - WHD21X2:C1  - WHD23X2:C1  - WHD11X2:A7  - WHD13X2:A7  -
            - WHD15X2:A7  - WHD17X2:A7  - WHD19X2:A7  - WHD21X2:A7  -
            - WHD23X2:A7  - WHD11X2:C7  - WHD13X2:C7  - WHD15X2:C7  -
            - WHD17X2:C7  - WHD19X2:C7  - WHD21X2:C7  - WHD23X2:C7  -
            - WHD11X2:A8  - WHD13X2:A8  - WHD15X2:A8  - WHD17X2:A8  -
            - WHD19X2:A8  - WHD21X2:A8  - WHD23X2:A8  - WHD11X2:C8  -
            - WHD13X2:C8  - WHD15X2:C8  - WHD17X2:C8  - WHD19X2:C8  -
            - WHD21X2:C8  - WHD23X2:C8  - WHD11X2:C9  - WHD13X2:C9  -
            - WHD15X2:C9  - WHD17X2:C9  - WHD19X2:C9  - WHD21X2:C9  -
            - WHD23X2:C9  - WHD11X2:C10 - WHD13X2:C10 - WHD15X2:C10 -
            - WHD17X2:C10 - WHD19X2:C10 - WHD21X2:C10 - WHD23X2:C10 -
            - WHD11X2:C11 - WHD13X2:C11 - WHD15X2:C11 - WHD17X2:C11 -
            - WHD19X2:C11 - WHD21X2:C11 - WHD23X2:C11 - WHD11X2:C12 -
            - WHD13X2:C12 - WHD15X2:C12 - WHD17X2:C12 - WHD19X2:C12 -
            - WHD21X2:C12 - WHD23X2:C12 - WHD11X2:C13 - WHD13X2:C13 -
            - WHD15X2:C13 - WHD17X2:C13 - WHD19X2:C13 - WHD21X2:C13 -
            - WHD23X2:C13 - WHD11X2:C14 - WHD13X2:C14 - WHD15X2:C14 -
            - WHD17X2:C14 - WHD19X2:C14 - WHD21X2:C14 - WHD23X2:C14 -
            - WHD13X2:C15 - WHD15X2:C15 - WHD17X2:C15 - WHD19X2:C15 -
            - WHD21X2:C15 - WHD23X2:C15 - WHD11X2:C15 - WHD13X2:C16 -
            - WHD15X2:C16 - WHD17X2:C16 - WHD19X2:C16 - WHD21X2:C16 -
            - WHD23X2:C16 - WHD11X2:A27 - WHD13X2:A27 - WHD15X2:A27 -
            - WHD17X2:A27 - WHD19X2:A27 - WHD21X2:A27 - WHD23X2:A27 -
            - WHD11X2:A28 - WHD13X2:A28 - WHD15X2:A28 - WHD17X2:A28 -
            - WHD19X2:A28 - WHD21X2:A28 - WHD23X2:A28 - WHD11X2:A32 -
            - WHD13X2:A32 - WHD15X2:A32 - WHD17X2:A32 - WHD19X2:A32 -
            - WHD21X2:A32 - WHD23X2:A32 - WHD11X2:C32 - WHD13X2:C32 -
            - WHD15X2:C32 - WHD17X2:C32 - WHD19X2:C32 - WHD21X2:C32 -
            - WHD23X2:C32 - WHD11X2:C16 - WHD25X1:A1  - WHD25X1:C1  -
            - WHD25X1:A24 - WHD25X1:A25 - WHD25X1:A26 - WHD25X1:A32 -
            - WHD25X1:C32 - WHD25X2:A1  - WHD25X2:C1  - WHD25X2:A7  -
            - WHD25X2:C7  - WHD25X2:A8  - WHD25X2:C8  - WHD25X2:C9  -
            - WHD25X2:C10 - WHD25X2:C11 - WHD25X2:C12 - WHD25X2:C13 -
            - WHD25X2:C14 - WHD25X2:C15 - WHD25X2:C16 - WHD25X2:A27 -
            - WHD25X2:A28 - WHD25X2:A32 - WHD25X2:C32

+12V          WHD10:21    - WHD10:23    - WHD10:25    - WHD11X1:A30 -
            - WHD13X1:A30 - WHD15X1:A30 - WHD17X1:A30 - WHD19X1:A30 -
            - WHD21X1:A30 - WHD23X1:A30 - WHD11X1:C30 - WHD13X1:C30 -
            - WHD15X1:C30 - WHD17X1:C30 - WHD19X1:C30 - WHD21X1:C30 -
            - WHD23X1:C30 - WHD11X2:A30 - WHD13X2:A30 - WHD15X2:A30 -
            - WHD17X2:A30 - WHD19X2:A30 - WHD21X2:A30 - WHD23X2:A30 -
            - WHD11X2:C30 - WHD13X2:C30 - WHD15X2:C30 - WHD17X2:C30 -
            - WHD19X2:C30 - WHD21X2:C30 - WHD23X2:C30 - WHD25X1:A30 -
            - WHD25X1:C30 - WHD25X2:A30 - WHD25X2:C30
+5V           WHD10:17    - WHD10:19    - WHD11X1:A27 - WHD13X1:A27 -
            - WHD15X1:A27 - WHD17X1:A27 - WHD19X1:A27 - WHD21X1:A27 -
            - WHD23X1:A27 - WHD11X1:C27 - WHD13X1:C27 - WHD15X1:C27 -
            - WHD17X1:C27 - WHD19X1:C27 - WHD21X1:C27 - WHD23X1:C27 -
            - WHD11X1:A31 - WHD13X1:A31 - WHD15X1:A31 - WHD17X1:A31 -
            - WHD19X1:A31 - WHD21X1:A31 - WHD23X1:A31 - WHD11X1:C31 -
            - WHD13X1:C31 - WHD15X1:C31 - WHD17X1:C31 - WHD19X1:C31 -
            - WHD21X1:C31 - WHD23X1:C31 - WHD11X2:A3  - WHD13X2:A3  -
            - WHD15X2:A3  - WHD17X2:A3  - WHD19X2:A3  - WHD21X2:A3  -
            - WHD23X2:A3  - WHD11X2:C3  - WHD13X2:C3  - WHD15X2:C3  -
            - WHD17X2:C3  - WHD19X2:C3  - WHD21X2:C3  - WHD23X2:C3  -
            - WHD11X2:A5  - WHD13X2:A5  - WHD15X2:A5  - WHD17X2:A5  -
            - WHD19X2:A5  - WHD21X2:A5  - WHD23X2:A5  - WHD11X2:C5  -
            - WHD13X2:C5  - WHD15X2:C5  - WHD17X2:C5  - WHD19X2:C5  -
            - WHD21X2:C5  - WHD23X2:C5  - WHD11X2:A31 - WHD13X2:A31 -
            - WHD15X2:A31 - WHD17X2:A31 - WHD19X2:A31 - WHD21X2:A31 -
            - WHD23X2:A31 - WHD11X2:C31 - WHD13X2:C31 - WHD15X2:C31 -
            - WHD17X2:C31 - WHD19X2:C31 - WHD21X2:C31 - WHD23X2:C31 -
            - WHD10:13    - WHD10:15    - WHD25X1:A27 - WHD25X1:C27 -
            - WHD25X1:A31 - WHD25X1:C31 - WHD25X2:A3  - WHD25X2:C3  -
            - WHD25X2:A5  - WHD25X2:C5  - WHD25X2:A31 - WHD25X2:C31
-12V          WHD10:27    - WHD11X1:A29 - WHD13X1:A29 - WHD15X1:A29 -
            - WHD17X1:A29 - WHD19X1:A29 - WHD21X1:A29 - WHD23X1:A29 -
            - WHD11X1:C29 - WHD13X1:C29 - WHD15X1:C29 - WHD17X1:C29 -
            - WHD19X1:C29 - WHD21X1:C29 - WHD23X1:C29 - WHD11X2:A29 -
            - WHD13X2:A29 - WHD15X2:A29 - WHD17X2:A29 - WHD19X2:A29 -
            - WHD21X2:A29 - WHD23X2:A29 - WHD11X2:C29 - WHD13X2:C29 -
            - WHD15X2:C29 - WHD17X2:C29 - WHD19X2:C29 - WHD21X2:C29 -
            - WHD23X2:C29 - WHD25X1:A29 - WHD25X1:C29 - WHD25X2:A29 -
            - WHD25X2:C29
-5V           WHD10:11    - WHD11X1:A2  - WHD13X1:A2  - WHD15X1:A2  -
            - WHD17X1:A2  - WHD19X1:A2  - WHD21X1:A2  - WHD23X1:A2  -
            - WHD11X1:C2  - WHD13X1:C2  - WHD15X1:C2  - WHD17X1:C2  -
            - WHD19X1:C2  - WHD21X1:C2  - WHD23X1:C2  - WHD25X1:A2  -
            - WHD25X1:C2
AD-OUT 0      WHD11X1:C19 - WHD13X1:C19
AD-OUT 1      WHD11X1:A20 - WHD13X1:A20
AD-OUT 2      WHD11X1:C20 - WHD13X1:C20
AD-OUT 3      WHD11X1:A21 - WHD13X1:A21
AD-OUT 4      WHD11X1:C21 - WHD13X1:C21
AD-OUT 5      WHD11X1:A22 - WHD13X1:A22
AD-OUT 6      WHD11X1:C22 - WHD13X1:C22
AD-OUT 7      WHD11X1:A23 - WHD13X1:A23
BLANK-N       WHD15X2:A14 - WHD17X2:A14 - WHD19X2:A14 - WHD21X2:A14 -
            - WHD23X2:A14 - WHD25X2:A14
```

```
| BYPASS
  CLK
| CLK-N
  CLK/4
| CLK/4-N
  COSYN-N
| FFT
  GAT.FIL
| GAT.REC
  H PULS
| IO/M-N
  M-IN 0
| M-IN 1
  M-IN 2
| M-IN 3
  M-IN 4
| M-IN 5
  M-IN 6
| M-IN 7
  M-IN 8
| M-IN 9
  M1-OUT
| M1-OUT
  M1-OUT
| M1-OUT
  M1-OUT
| M1-OUT
  M1-OUT
| M1-OUT
  M1-OUT
| M1-OUT
  M2-OUT
| M2-OUT
  M2-OUT
| M2-OUT
  M2-OUT
| M2-OUT
  M2-OUT
| M2-OUT
  M2-OUT
| M2-OUT
  RD-N
| RESET
  SPARE
| SPARE
  SPARE
| SPARE
  SPARE
| SPARE
  SPARE
| SUB 0
  SUB 1
| SUB 2
  SUB 3
| SUB 4
```

SEQUENCE OF MNEMONICS

SUB 7	WHD23X2:A10	GAT.FILL	WHD25X1:A24
0V	WHD23X2:A11	H PULS	WHD25X1:A25
0V	WHD23X2:A12	FFT	WHD25X1:A26
0V	WHD23X2:A13	V PULS	WHD25X1:A27
+5V	WHD23X2:A14	BLANK-N	WHD25X1:A28
CLK/4	WHD23X2:A15	50HZ	WHD25X1:A29
-12V	WHD23X2:A17	UP-AD 0	WHD25X1:A30
+12V	WHD23X2:A18	UP-AD 2	WHD25X1:A31
+5V	WHD23X2:A19	UP-AD 4	WHD25X1:A32
0V	WHD23X2:A20	UP-AD 6	WHD25X1:C24
M1-OUT 4	WHD23X2:A21	UP-A0	WHD25X1:C25
M1-OUT 6	WHD23X2:A22	UP-A2	WHD25X1:C26
M1-OUT 8	WHD23X2:A23	UP-A4	WHD25X1:C27
M2-OUT 1	WHD23X2:A24	UP-A6	WHD25X1:C28
M2-OUT 3	WHD23X2:A25	RD-N	WHD25X1:C29
M2-OUT 5	WHD23X2:A26	RESET	WHD25X1:C30
M2-OUT 7	WHD23X2:A27	0V	WHD25X1:C31
M2-OUT 9	WHD23X2:A28	0V	WHD25X1:C32
SUB 0	WHD23X2:A29	-12V	WHD25X2:A1
SUB 2	WHD23X2:A30	+12V	WHD25X2:A2
SUB 4	WHD23X2:A31	+5V	WHD25X2:A3
SUB 6	WHD23X2:A32	0V	WHD25X2:A4
SUB 8	WHD23X2:C10	0V	WHD25X2:A5
WFIFO-N	WHD23X2:C11	0V	WHD25X2:A6
WIN-F2	WHD23X2:C12	0V	WHD25X2:A7
WIN-F1	WHD23X2:C13	0V	WHD25X2:A8
+5V	WHD23X2:C14	0V	WHD25X2:A9
CLK/4-N	WHD23X2:C15	0V	WHD25X2:C1
-12V	WHD23X2:C16	0V	WHD25X2:C2
+12V	WHD23X2:C17	UP-AD 1	WHD25X2:C3
+5V	WHD23X2:C18	UP-AD 3	WHD25X2:C4
0V	WHD23X2:C19	UP-AD 5	WHD25X2:C5
0V	WHD23X2:C20	UP-AD 7	WHD25X2:C6
SPARE 1	WHD23X2:C21	UP-A1	WHD25X2:C7
+5V	WHD23X2:C22	UP-A3	WHD25X2:C8
CLK	WHD23X2:C23	UP-A5	WHD25X2:C9
+5V	WHD23X2:C24	UP-A7	WHD25X2:A10
SPARE 3	WHD23X2:C25	WR-N	WHD25X2:A11
0V	WHD23X2:C26	IO/M-N	WHD25X2:A12
0V	WHD23X2:C27	BYPASS	WHD25X2:A13
GAT.HEC	WHD23X2:C28	SPARE 5	WHD25X2:A14
0V	WHD23X2:C29	-12V	WHD25X2:A15
SPARE 2	WHD23X2:C30	+12V	WHD25X2:A17
+5V	WHD23X2:C31	+5V	WHD25X2:A18
CLK-N	WHD23X2:C32	0V	WHD25X2:A19
+5V	WHD25X1:A1	0V	WHD25X2:A20
SPARE 4	WHD25X1:A2	-5V	WHD25X2:A21
0V	WHD25X1:A3	SPARE 0	WHD25X2:A22
0V	WHD25X1:C1	0V	WHD25X2:A23
0V	WHD25X1:C2	-5V	WHD25X2:A24

RD-N			
RESET			
0V			
0V			
-12V			
+12V			
+5V			
0V			
0V			
0V			
0V			
0V			
0V			
0V			
UP-AD 1			
UP-AD 3			
UP-AD 5			
UP-AD 7			
UP-A1			
UP-A3			
UP-A5			
UP-A7			
WR-N			
IO/M-N			
BYPASS			
SPARE 5			
-12V			
+12V			
+5V			
0V			

0V	WHD10:12	WHD10:14	WHD10:16	WHD10:18
	WHD10:20	WHD10:22	WHD10:24	WHD10:26
	WHD10:28	WHD10:29	WHD11X1:A1	WHD13X1:A1
	WHD15X1:A1	WHD17X1:A1	WHD19X1:A1	WHD21X1:A1
	WHD23X1:A1	WHD11X1:C1	WHD13X1:C1	WHD15X1:C1
	WHD17X1:C1	WHD19X1:C1	WHD21X1:C1	WHD23X1:C1
	WHD13X1:C13	WHD15X1:C13	WHD17X1:C13	WHD19X1:C13
	WHD21X1:C13	WHD13X1:A19	WHD15X1:A19	WHD17X1:A19
	WHD19X1:A19	WHD21X1:A19	WHD11X1:A24	WHD13X1:A24
	WHD15X1:A24	WHD19X1:A24	WHD21X1:A24	WHD23X1:A24
	WHD11X1:A25	WHD13X1:A25	WHD15X1:A25	WHD17X1:A25
	WHD19X1:A25	WHD21X1:A25	WHD23X1:A25	WHD11X1:A26
	WHD13X1:A26	WHD15X1:A26	WHD17X1:A26	WHD19X1:A26
	WHD21X1:A26	WHD23X1:A26	WHD11X1:A32	WHD13X1:A32
	WHD15X1:A32	WHD17X1:A32	WHD19X1:A32	WHD21X1:A32
	WHD23X1:A32	WHD11X1:C32	WHD13X1:C32	WHD15X1:C32
	WHD17X1:C32	WHD19X1:C32	WHD21X1:C32	WHD23X1:C32
	WHD11X2:A1	WHD13X2:A1	WHD15X2:A1	WHD17X2:A1
	WHD19X2:A1	WHD21X2:A1	WHD23X2:A1	WHD11X2:C1
	WHD13X2:C1	WHD15X2:C1	WHD17X2:C1	WHD19X2:C1
	WHD21X2:C1	WHD23X2:C1	WHD11X2:A7	WHD13X2:A7
	WHD15X2:A7	WHD17X2:A7	WHD19X2:A7	WHD21X2:A7
	WHD23X2:A7	WHD11X2:C7	WHD13X2:C7	WHD15X2:C7
	WHD17X2:C7	WHD19X2:C7	WHD21X2:C7	WHD23X2:C7
	WHD11X2:A8	WHD13X2:A8	WHD15X2:A8	WHD17X2:A8
	WHD19X2:A8	WHD21X2:A8	WHD23X2:A8	WHD11X2:C8
	WHD13X2:C8	WHD15X2:C8	WHD17X2:C8	WHD19X2:C8
	WHD21X2:C8	WHD23X2:C8	WHD11X2:C9	WHD13X2:C9
	WHD15X2:C9	WHD17X2:C9	WHD19X2:C9	WHD21X2:C9
	WHD23X2:C9	WHD11X2:C10	WHD13X2:C10	WHD15X2:C10
	WHD17X2:C10	WHD19X2:C10	WHD21X2:C10	WHD23X2:C10
	WHD11X2:C11	WHD13X2:C11	WHD15X2:C11	WHD17X2:C11
	WHD19X2:C11	WHD21X2:C11	WHD23X2:C11	WHD11X2:C12
	WHD13X2:C12	WHD15X2:C12	WHD17X2:C12	WHD19X2:C12
	WHD21X2:C12	WHD23X2:C12	WHD11X2:C13	WHD13X2:C13
	WHD15X2:C13	WHD17X2:C13	WHD19X2:C13	WHD21X2:C13
	WHD23X2:C13	WHD11X2:C14	WHD13X2:C14	WHD15X2:C14
	WHD17X2:C14	WHD19X2:C14	WHD21X2:C14	WHD23X2:C14
	WHD11X2:C15	WHD13X2:C15	WHD15X2:C15	WHD17X2:C15
	WHD19X2:C15	WHD21X2:C15	WHD23X2:C15	WHD11X2:C16
	WHD13X2:C16	WHD15X2:C16	WHD17X2:C16	WHD19X2:C16
	WHD21X2:C16	WHD23X2:C16	WHD11X2:A27	WHD13X2:A27
	WHD15X2:A27	WHD17X2:A27	WHD19X2:A27	WHD21X2:A27
	WHD23X2:A27	WHD11X2:A28	WHD13X2:A28	WHD15X2:A28
	WHD17X2:A28	WHD19X2:A28	WHD21X2:A28	WHD23X2:A28
	WHD11X2:A32	WHD13X2:A32	WHD15X2:A32	WHD17X2:A32
	WHD19X2:A32	WHD21X2:A32	WHD23X2:A32	WHD11X2:C32
	WHD13X2:C32	WHD15X2:C32	WHD17X2:C32	WHD19X2:C32
	WHD21X2:C32	WHD23X2:C32	WHD11X2:C16	WHD25X1:A1
	WHD25X1:C1	WHD25X1:A24	WHD25X1:A25	WHD25X1:A26
	WHD25X1:A27	WHD25X1:A32	WHD25X1:C32	WHD25X2:A1
	WHD25X2:A7	WHD25X2:C1	WHD25X2:C2	WHD25X2:C3
	WHD25X2:C7	WHD25X2:A8	WHD25X2:C8	WHD25X2:C9
	WHD25X2:C10	WHD25X2:C11	WHD25X2:C12	WHD25X2:C13
	WHD25X2:C14	WHD25X2:C15	WHD25X2:C16	WHD25X2:A27
	WHD25X2:A28	WHD25X2:A32	WHD25X2:C32	

+12V	WHD10:21	WHD10:23	WHD10:25	WHD11X1:A30
	WHD13X1:A30	WHD15X1:A30	WHD17X1:A30	WHD19X1:A30
	WHD21X1:A30	WHD23X1:A30	WHD11X1:C30	WHD13X1:C30
	WHD15X1:C30	WHD17X1:C30	WHD19X1:C30	WHD21X1:C30
	WHD23X1:C30	WHD11X2:A30	WHD13X2:A30	WHD15X2:A30
	WHD17X2:A30	WHD19X2:A30	WHD21X2:A30	WHD23X2:A30
	WHD11X2:C30	WHD13X2:C30	WHD15X2:C30	WHD17X2:C30
	WHD19X2:C30	WHD21X2:C30	WHD23X2:C30	WHD25X1:A30
	WHD25X1:C30	WHD25X2:A30	WHD25X2:C30	
+5V	WHD10:17	WHD10:19	WHD11X1:A27	WHD13X1:A27
	WHD15X1:A27	WHD17X1:A27	WHD19X1:A27	WHD21X1:A27
	WHD23X1:A27	WHD11X1:C27	WHD13X1:C27	WHD15X1:C27
	WHD17X1:C27	WHD19X1:C27	WHD21X1:C27	WHD23X1:C27
	WHD11X1:A31	WHD13X1:A31	WHD15X1:A31	WHD17X1:A31
	WHD19X1:A31	WHD21X1:A31	WHD23X1:A31	WHD11X1:C31
	WHD13X1:C31	WHD15X1:C31	WHD17X1:C31	WHD19X1:C31
	WHD21X1:C31	WHD23X1:C31	WHD11X2:A3	WHD13X2:A3
	WHD15X2:A3	WHD17X2:A3	WHD19X2:A3	WHD21X2:A3
	WHD23X2:A3	WHD11X2:C3	WHD13X2:C3	WHD15X2:C3
	WHD17X2:C3	WHD19X2:C3	WHD21X2:C3	WHD23X2:C3
	WHD11X2:A5	WHD13X2:A5	WHD15X2:A5	WHD17X2:A5
	WHD19X2:A5	WHD21X2:A5	WHD23X2:A5	WHD11X2:C5
	WHD13X2:C5	WHD15X2:C5	WHD17X2:C5	WHD19X2:C5
	WHD21X2:C5	WHD23X2:C5	WHD11X2:A31	WHD13X2:A31
	WHD15X2:A31	WHD17X2:A31	WHD19X2:A31	WHD21X2:A31
	WHD23X2:A31	WHD11X2:C31	WHD13X2:C31	WHD15X2:C31
	WHD17X2:C31	WHD19X2:C31	WHD21X2:C31	WHD23X2:C31
	WHD11X1:13	WHD11X1:15	WHD25X1:A27	WHD25X1:C27
	WHD25X1:A31	WHD25X1:C31	WHD25X2:A3	WHD25X2:C3
	WHD25X2:A5	WHD25X2:C5	WHD25X2:A31	WHD25X2:C31
-12V	WHD10:27	WHD11X1:A29	WHD13X1:A29	WHD15X1:A29
	WHD17X1:A29	WHD19X1:A29	WHD21X1:A29	WHD23X1:A29
	WHD11X1:C29	WHD13X1:C29	WHD15X1:C29	WHD17X1:C29
	WHD19X1:C29	WHD21X1:C29	WHD23X1:C29	WHD11X2:A29
	WHD13X2:A29	WHD15X2:A29	WHD17X2:A29	WHD19X2:A29
	WHD21X2:A29	WHD23X2:A29	WHD11X2:C29	WHD13X2:C29
	WHD15X2:C29	WHD17X2:C29	WHD19X2:C29	WHD21X2:C29
	WHD23X2:C29	WHD25X1:A29	WHD25X1:C29	WHD25X2:A29
	WHD25X2:C29			
-5V	WHD10:11	WHD11X1:A2	WHD13X1:A2	WHD15X1:A2
	WHD17X1:A2	WHD19X1:A2	WHD21X1:A2	WHD23X1:A2
	WHD11X1:C2	WHD13X1:C2	WHD15X1:C2	WHD17X1:C2
	WHD19X1:C2	WHD21X1:C2	WHD23X1:C2	WHD25X1:A2
	WHD25X1:C2			
AJ-OUT 0	WHD11X1:C19	WHD13X1:C19		
AJ-OUT 1	WHD11X1:A20	WHD13X1:A20		
AJ-OUT 2	WHD11X1:C20	WHD13X1:C20		
AJ-OUT 3	WHD11X1:A21	WHD13X1:A21		
AJ-OUT 4	WHD11X1:C21	WHD13X1:C21		
AJ-OUT 5	WHD11X1:A22	WHD13X1:A22		
AJ-OUT 6	WHD11X1:C22	WHD13X1:C22		
AJ-OUT 7	WHD11X1:A23	WHD13X1:A23		
BLANK-N	WHD15X2:A14	WHD17X2:A14	WHD19X2:A14	WHD21X2:A14
	WHD23X2:A14	WHD25X2:A14		

BYPASS	WHD11X2:C27	WHD13X2:C27	WHD15X2:C27	WHD17X2:C27
	WHD19X2:C27	WHD21X2:C27	WHD23X2:C27	WHD25X2:C27
CLK	WHD11X2:A4	WHD13X2:A4	WHD15X2:A4	WHD17X2:A4
	WHD19X2:A4	WHD21X2:A4	WHD23X2:A4	WHD25X2:A4
CLK-N	WHD11X2:C4	WHD13X2:C4	WHD15X2:C4	WHD17X2:C4
	WHD19X2:C4	WHD21X2:C4	WHD23X2:C4	WHD25X2:C4
CLK/4	WHD11X1:A28	WHD13X1:A28	WHD15X1:A28	WHD17X1:A28
	WHD19X1:A28	WHD21X1:A28	WHD23X1:A28	WHD25X1:A28
CLK/4-N	WHD11X1:C28	WHD13X1:C28	WHD15X1:C28	WHD17X1:C28
	WHD19X1:C28	WHD21X1:C28	WHD23X1:C28	WHD25X1:C28
COSYN-N	WHD11X2:A16	WHD13X2:A16	WHD15X2:A16	WHD17X2:A16
FFT	WHD11X2:A12	WHD13X2:A12	WHD15X2:A12	WHD17X2:A12
	WHD19X2:A12	WHD21X2:A12	WHD23X2:A12	WHD25X2:A12
GAT.FILL	WHD15X2:A13	WHD17X2:A13	WHD23X2:A10	WHD21X2:A10
	WHD23X2:A10	WHD25X2:A13		
GAT.HEC	WHD15X2:A9	WHD17X2:A9	WHD19X2:A9	WHD21X2:A9
	WHD23X2:A9	WHD25X2:A9		
H PULS	WHD11X2:A11	WHD13X2:A11	WHD15X2:A11	WHD17X2:A11
	WHD19X2:A11	WHD21X2:A11	WHD23X2:A11	WHD25X2:A11
IO/M-N	WHD13X2:C26	WHD15X2:C26	WHD17X2:C26	WHD19X2:C26
	WHD21X2:C26	WHD23X2:C26	WHD25X2:C26	
M-IN 0	WHD13X1:C3	WHD17X1:C3	WHD19X1:C3	
	WHD21X1:C3	WHD23X1:C3		
M-IN 1	WHD13X1:A4	WHD15X1:A4	WHD17X1:A4	WHD19X1:A4
	WHD21X1:A4	WHD23X1:A4		
M-IN 2	WHD13X1:C4	WHD15X1:C4	WHD17X1:C4	WHD19X1:C4
	WHD21X1:C4	WHD23X1:C4		
M-IN 3	WHD13X1:A5	WHD15X1:A5	WHD17X1:A5	WHD19X1:A5
	WHD21X1:A5	WHD23X1:A5		
M-IN 4	WHD17X1:C5	WHD19X1:C5	WHD21X1:C5	WHD13X1:C5
	WHD15X1:C5	WHD23X1:C5		
M-IN 5	WHD13X1:A6	WHD15X1:A6	WHD17X1:A6	WHD19X1:A6
	WHD21X1:A6	WHD23X1:A6		
M-IN 6	WHD13X1:C6	WHD15X1:C6	WHD17X1:C6	WHD19X1:C6
	WHD21X1:C6	WHD23X1:C6		
M-IN 7	WHD13X1:A7	WHD15X1:A7	WHD17X1:A7	WHD19X1:A7
	WHD21X1:A7	WHD23X1:A7		
M-IN 8	WHD13X1:C7	WHD15X1:C7	WHD17X1:C7	WHD19X1:C7
	WHD21X1:C7	WHD23X1:C7		
M-IN 9	WHD13X1:A8	WHD15X1:A8	WHD17X1:A8	WHD19X1:A8
	WHD21X1:A8	WHD23X1:A8		
M1-OUT 0	WHD13X1:C8	WHD15X1:C8	WHD17X1:C8	WHD19X1:C8
	WHD21X1:C8	WHD23X1:C8		
M1-OUT 1	WHD13X1:A9	WHD15X1:A9	WHD17X1:A9	WHD19X1:A9
	WHD21X1:A9	WHD23X1:A9		
M1-OUT 2	WHD13X1:C9	WHD15X1:C9	WHD17X1:C9	WHD19X1:C9
	WHD21X1:C9	WHD23X1:C9		
M1-OUT 3	WHD13X1:A10	WHD15X1:A10	WHD17X1:A10	WHD19X1:A10
	WHD21X1:A10	WHD23X1:A10		
M1-OUT 4	WHD13X1:C10	WHD15X1:C10	WHD17X1:C10	WHD19X1:C10
	WHD21X1:C10	WHD23X1:C10		
M1-OUT 5	WHD13X1:A11	WHD15X1:A11	WHD17X1:A11	WHD19X1:A11
	WHD21X1:A11	WHD23X1:A11		
M1-OUT 6	WHD13X1:C11	WHD15X1:C11	WHD17X1:C11	WHD19X1:C11
	WHD21X1:C11	WHD23X1:C11		

M1-OUT 7	WHD13X1:A12	WHD15X1:A12	WHD17X1:A12	WHD19X1:A12
	WHD21X1:A12	WHD23X1:A12		
M1-OUT 8	WHD13X1:C12	WHD15X1:C12	WHD17X1:C12	WHD19X1:C12
	WHD21X1:C12	WHD23X1:C12		
M1-OUT 9	WHD13X1:A13	WHD15X1:A13	WHD17X1:A13	WHD19X1:A13
	WHD21X1:A13	WHD23X1:A13		
M2-OUT 0	WHD13X1:A14	WHD15X1:A14	WHD17X1:A14	WHD19X1:A14
	WHD21X1:A14	WHD23X1:A14		
M2-OUT 1	WHD13X1:C14	WHD15X1:C14	WHD17X1:C14	WHD19X1:C14
	WHD21X1:C14	WHD23X1:C14		
M2-OUT 2	WHD13X1:A15	WHD15X1:A15	WHD17X1:A15	WHD19X1:A15
	WHD21X1:A15	WHD23X1:A15		
M2-OUT 3	WHD13X1:C15	WHD15X1:C15	WHD17X1:C15	WHD19X1:C15
	WHD21X1:C15	WHD23X1:C15		
M2-OUT 4	WHD13X1:A16	WHD15X1:A16	WHD17X1:A16	WHD19X1:A16
	WHD21X1:A16	WHD23X1:A16		
M2-OUT 5	WHD13X1:C16	WHD15X1:C16	WHD17X1:C16	WHD19X1:C16
	WHD21X1:C16	WHD23X1:C16		
M2-OUT 6	WHD13X1:A17	WHD15X1:A17	WHD17X1:A17	WHD19X1:A17
	WHD21X1:A17	WHD23X1:A17		
M2-OUT 7	WHD13X1:C17	WHD15X1:C17	WHD17X1:C17	WHD19X1:C17
	WHD21X1:C17	WHD23X1:C17		
M2-OUT 8	WHD13X1:A18	WHD15X1:A18	WHD17X1:A18	WHD19X1:A18
	WHD21X1:A18	WHD23X1:A18		
M2-OUT 9	WHD13X1:C18	WHD15X1:C18	WHD17X1:C18	WHD19X1:C18
	WHD21X1:C18	WHD23X1:C18		
RD-N	WHD13X2:A25	WHD15X2:A25	WHD17X2:A25	WHD19X2:A25
	WHD21X2:A25	WHD23X2:A25	WHD25X2:A25	
RESET	WHD13X2:A26	WHD15X2:A26	WHD17X2:A26	WHD19X2:A26
	WHD21X2:A26	WHD23X2:A26	WHD25X2:A26	
SPARE 0	WHD11X1:A3	WHD13X1:A3	WHD15X1:A3	WHD17X1:A3
	WHD19X1:A3	WHD21X1:A3	WHD23X1:A3	WHD25X1:A3
SPARE 1	WHD11X2:A2	WHD13X2:A2	WHD15X2:A2	WHD17X2:A2
	WHD19X2:A2	WHD21X2:A2	WHD23X2:A2	WHD25X2:A2
SPARE 2	WHD11X2:C2	WHD13X2:C2	WHD15X2:C2	WHD17X2:C2
	WHD19X2:C2	WHD21X2:C2	WHD23X2:C2	WHD25X2:C2
SPARE 3	WHD11X2:A6	WHD13X2:A6	WHD15X2:A6	WHD17X2:A6
	WHD19X2:A6	WHD21X2:A6	WHD23X2:A6	WHD25X2:A6
SPARE 4	WHD11X2:C6	WHD13X2:C6	WHD15X2:C6	WHD17X2:C6
	WHD19X2:C6	WHD21X2:C6	WHD23X2:C6	WHD25X2:C6
SPARE 5	WHD11X2:C28	WHD13X2:C28	WHD15X2:C28	WHD17X2:C28
	WHD19X2:C28	WHD21X2:C28	WHD23X2:C28	WHD25X2:C28
SPARE 6	WHD11X1:C24	WHD13X1:C24	WHD15X1:C24	WHD17X1:C24
	WHD19X1:C24			
SUB 1	WHD15X1:C19	WHD17X1:C19	WHD19X1:C19	WHD21X1:C19
	WHD23X1:C19			
SUB 1	WHD15X1:A20	WHD17X1:A20	WHD19X1:A20	WHD21X1:A20
	WHD23X1:A20			
SUB 2	WHD15X1:C20	WHD17X1:C20	WHD19X1:C20	WHD21X1:C20
	WHD23X1:C20			
SUB 3	WHD15X1:A21	WHD17X1:A21	WHD19X1:A21	WHD21X1:A21
	WHD23X1:A21			
SUB 4	WHD15X1:C21	WHD17X1:C21	WHD19X1:C21	WHD21X1:C21
	WHD23X1:C21			

SUB 5	WHD15X1:A22	WHD17X1:A22	WHD19X1:A22	WHD21X1:A22
	WHD23X1:A22			
SUB 6	WHD15X1:C22	WHD17X1:C22	WHD19X1:C22	WHD21X1:C22
	WHD23X1:C22			
SUB 7	WHD15X1:A23	WHD17X1:A23	WHD19X1:A23	WHD21X1:A23
	WHD23X1:A23			
SUB 8	WHD15X1:C23	WHD17X1:C23	WHD19X1:C23	WHD21X1:C23
	WHD23X1:C23			
UP-AD 0	WHD13X2:A17	WHD15X2:A17	WHD17X2:A17	WHD19X2:A17
	WHD21X2:A17	WHD23X2:A17	WHD25X2:A17	
UP-AD 1	WHD13X2:C17	WHD15X2:C17	WHD17X2:C17	WHD19X2:C17
	WHD21X2:C17	WHD23X2:C17	WHD25X2:C17	
UP-AD 2	WHD13X2:A18	WHD15X2:A18	WHD17X2:A18	WHD19X2:A18
	WHD21X2:A18	WHD23X2:A18	WHD25X2:A18	
UP-AD 3	WHD13X2:C18	WHD15X2:C18	WHD17X2:C18	WHD19X2:C18
	WHD21X2:C18	WHD23X2:C18	WHD25X2:C18	
UP-AJ 4	WHD13X2:A19	WHD15X2:A19	WHD17X2:A19	WHD19X2:A19
	WHD21X2:A19	WHD23X2:A19	WHD25X2:A19	
UP-AJ 5	WHD13X2:C19	WHD15X2:C19	WHD17X2:C19	WHD19X2:C19
	WHD21X2:C19	WHD23X2:C19	WHD25X2:C19	
UP-AD 6	WHD13X2:A20	WHD15X2:A20	WHD17X2:A20	WHD19X2:A20
	WHD21X2:A20	WHD23X2:A20	WHD25X2:A20	
UP-AD 7	WHD13X2:C20	WHD15X2:C20	WHD17X2:C20	WHD19X2:C20
	WHD21X2:C20	WHD23X2:C20	WHD25X2:C20	
UP-A0	WHD13X2:A21	WHD15X2:A21	WHD17X2:A21	WHD19X2:A21
	WHD21X2:A21	WHD23X2:A21	WHD25X2:A21	
UP-A1	WHD13X2:C21	WHD15X2:C21	WHD17X2:C21	WHD19X2:C21
	WHD21X2:C21	WHD23X2:C21	WHD25X2:C21	
UP-A2	WHD13X2:A22	WHD15X2:A22	WHD17X2:A22	WHD19X2:A22
	WHD21X2:A22	WHD23X2:A22	WHD25X2:A22	
UP-A3	WHD13X2:C22	WHD15X2:C22	WHD17X2:C22	WHD19X2:C22
	WHD21X2:C22	WHD23X2:C22	WHD25X2:C22	
UP-A4	WHD13X2:A23	WHD15X2:A23	WHD17X2:A23	WHD19X2:A23
	WHD21X2:A23	WHD23X2:A23	WHD25X2:A23	
UP-A5	WHD13X2:C23	WHD15X2:C23	WHD17X2:C23	WHD19X2:C23
	WHD21X2:C23	WHD23X2:C23	WHD25X2:C23	
UP-A6	WHD13X2:A24	WHD15X2:A24	WHD17X2:A24	WHD19X2:A24
	WHD21X2:A24	WHD23X2:A24	WHD25X2:A24	
UP-A7	WHD13X2:C24	WHD15X2:C24	WHD17X2:C24	WHD19X2:C24
	WHD21X2:C24	WHD23X2:C24	WHD25X2:C24	
V PULS	WHD11X2:A13	WHD13X2:A13	WHD15X2:A13	WHD17X2:A13
	WHD19X2:A13	WHD21X2:A13	WHD23X2:A13	WHD25X2:A13
WFIFO-N	WHD21X1:C24	WHD23X1:C24	WHD25X1:C24	
WIN-F1	WHD15X1:C26	WHD17X1:C26	WHD19X1:C26	WHD21X1:C26
	WHD23X1:C26	WHD25X1:C26		
WIN-F2	WHD15X1:C25	WHD17X1:C25	WHD19X1:C25	WHD21X1:C25
	WHD23X1:C25	WHD25X1:C25		
WR-N	WHD13X2:C25	WHD15X2:C25	WHD17X2:C25	WHD19X2:C25
	WHD21X2:C25	WHD23X2:C25	WHD25X2:C25	

50HZ	WHD11X2:A15	WHD13X2:A15	WHD15X2:A15	WHD17X2:A15
	WHD19X2:A15	WHD21X2:A15	WHD23X2:A15	WHD25X2:A15

LAY-OUT + WIRING LIST