Rafale EV 30

Mobile Radiographic Unit

Service Manual

Parc Scientifique G.Besse, 175 allée Von Neumann ◆ 30035 Nimes cedex 1
+33 (0)4 66 29 09 07 ◆ **FAX** +33 (0)4 66 29 71 23
e-mail export@apelem.com
Site web: www.apelem.com

Original version of this manual is in Italian language therefore, for further information and clarification, please refer to the Italian one.

COD. 04.02.007.005 – REV.1 VALID FROM 01ST APRIL 2011

DOCUMENT REVISION STATUS

Document code: 04.02.007.005
Revision 1 – Valid from 01st April 2011 • Doc. 10551 - Valid from 01st April 2011 • Doc. 7819 - Valid from 01st July 2004

Index

General index (doc. 10551)

Valid from 01st April 2011

Section 0 - Index

Section 1 – Installation

Section 2 – Maintenance

Section 3 – X-ray settings

Section 4 – Drawings

Annex – 115Vac Power supply (optional)

White Page

Installation

1 INTRODUCTION

The installation procedure consists of different operations to be carried out in the order shown in the *flow chart* below.

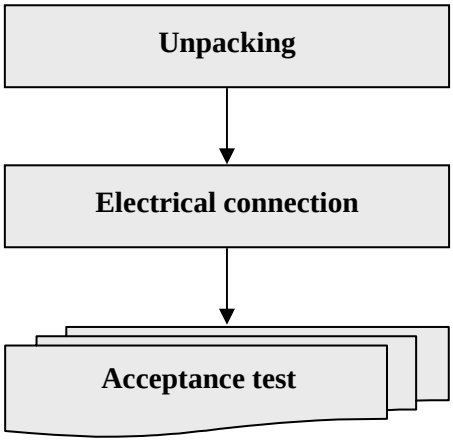

The various operations indicated are described in detail in the following paragraphs.

***NOTE**: the radiological system is normally pre-installed and configured in the factory according to the specific requirements of the customer. Certain adjustments may, however, be necessary when components are replaced.*
The whole machine parameter adjustment procedure is described in detail in this manual.

After 30 minutes of non-use, the equipment automatically switches into stand-by mode, that means the capacitors battery is unloaded; the words "Stand By" appears on the display of control console and the value of the battery voltage is zero. Pressing any key of control console, the battery reloads to the maximum value and it is possible to make X-Ray exposure. During capacitors battery loading the words "Waiting" will appear on control console display.

2 UNPACKING

The radiological system is packed in a single case containing all the parts of the apparatus. To unpack the unit, proceed as described on the following paragraph, according to the type of packing:

- simple pallet with cellophane – SEE § 2.1
- pallet with carton – SEE § 2.2
- wood packing crate – SEE § 2.3

If necessary, follow the unpacking procedure backwards to pack the unit again.

2.1 PACKING WITH CELLOPHANE

1. Cut the tape (**4**) and remove the slide (**5**) – SEE **FIGURE 1**
2. remove the protective bag (**6**)
3. unscrew the four self-threading screws (**7**) which fix the pedal fixing bracket (**8**) to the bottom of the crate
4. unscrew the four screws (**9**) which fix the pedal fixing bracket (**8**) to the mobile unit
5. mount the tilting pedal (**10**), located inside the cassette holder (**11**), by means of the screws and washers previously disassembled from the bracket (**8**)
6. free the X-ray Tube Head fixing brackets (**12**) from the tie-rod (**17**) - SEE **FIGURE 2** - working on nuts (**13**)
7. unscrew the self-threading screws (**14**) and remove the X-ray Tube Head fixing brackets (**12**)
8. put the slide (**5**) on the floor, as shown in **FIGURE 1**
9. slowly move the mobile unit towards the slide (**5**), keeping the "Dead-Man-Control" brake lever (**18**) pressed. Note that the front wheel (**15**) of the unit must come out of its packing housing (**16**)
10. let the unit move slowly from the slide (**5**) till its complete positioning on the floor and release the brake lever (**18**).

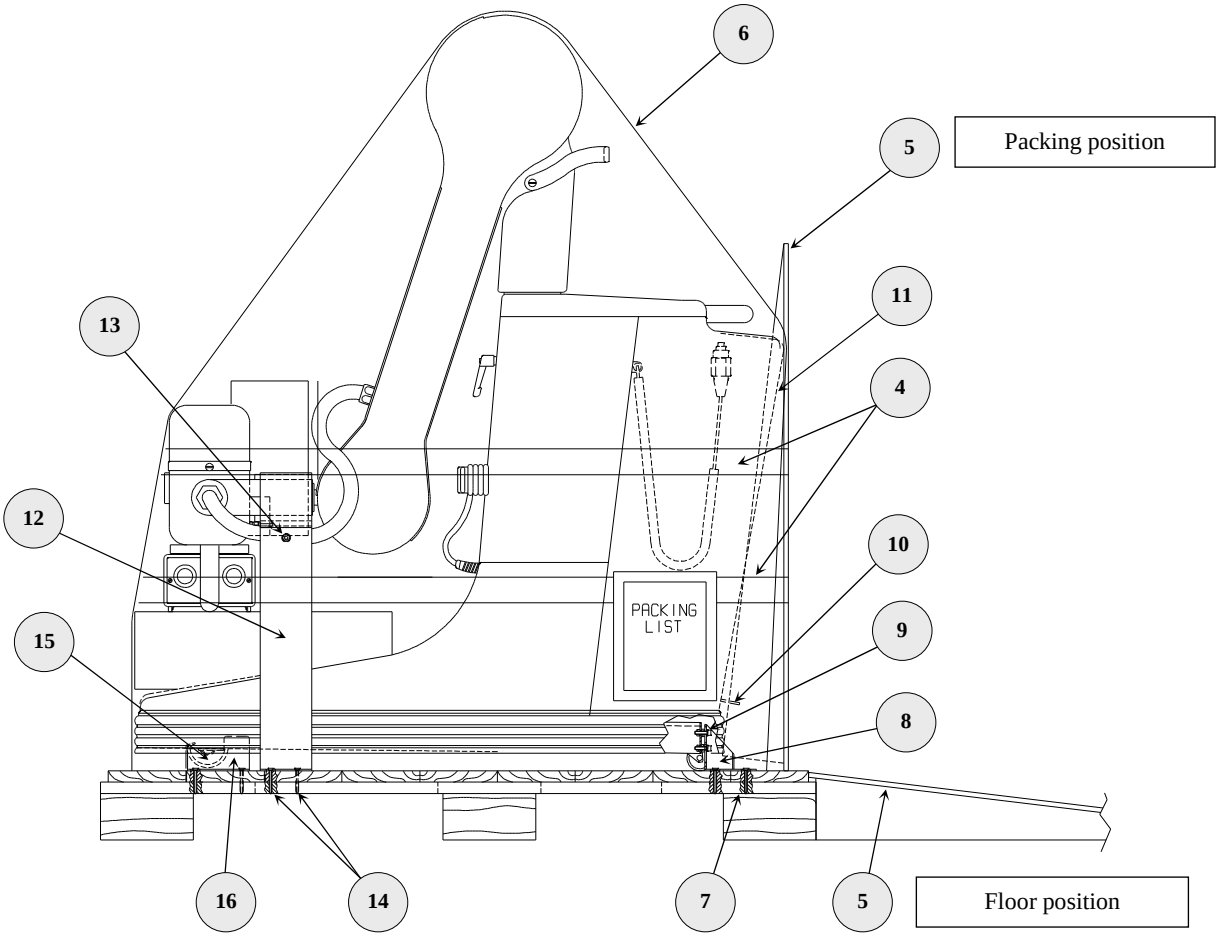

FIGURE 1 - LATERAL VIEW

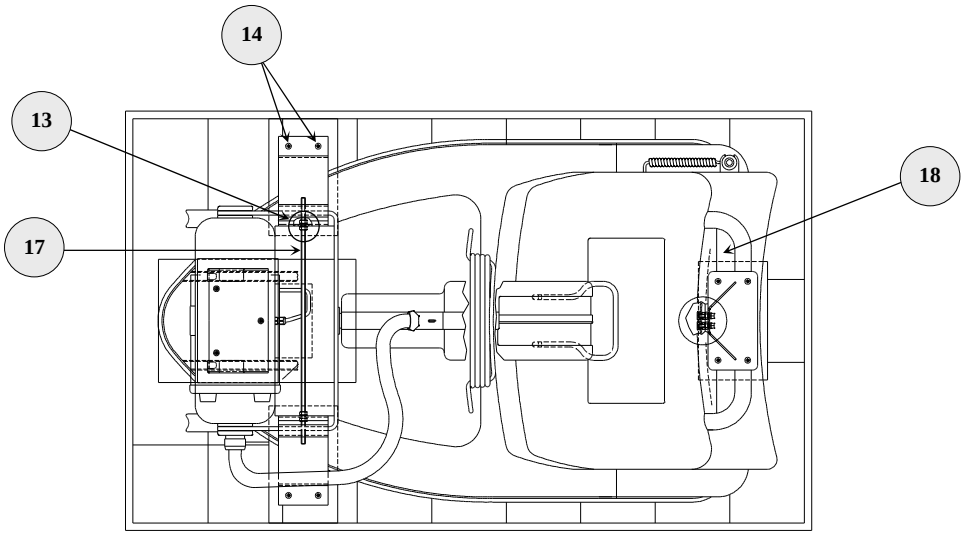

FIGURE 2 - VIEW FROM ABOVE

2.2 PACKING WITH CARTON

1. Remove the screws (**1**) - SEE **FIGURE 3** - which fix the packing carton to the crate pallet (**2**)
2. cut the band (**3**)
3. remove the carton packing from its housing; the mobile unit is as shown in **FIGURE 1**
4. proceed according to the packing with cellophane procedure (§ 2.1).

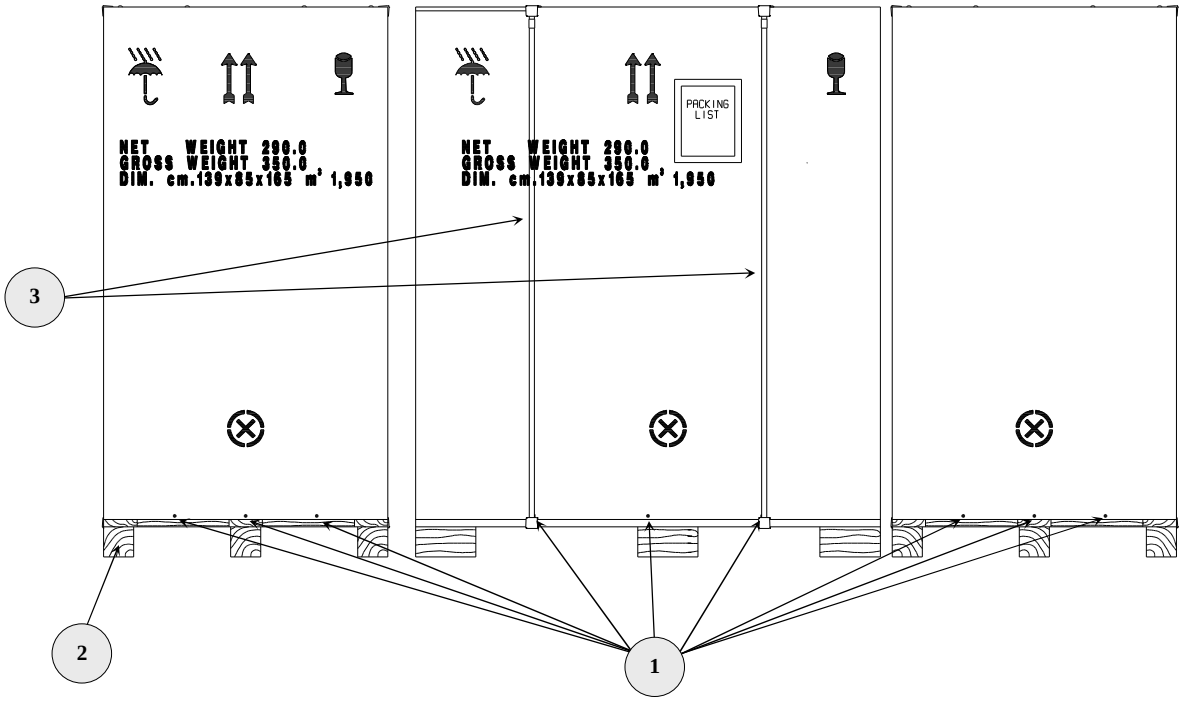

FIGURE 3 - PALLET WITH CARTON

2.3 PACKING WITH WOOD CRATE

1. Dismantle the crate cover (**1**) – SEE **FIGURE 4**
2. remove the crate walls: be careful not to ruin the wall (**5**) that has to be used as slide; the mobile unit is as shown in **FIGURE 1**

   Note: in the wood packing case, the slide (5) is not mounted as shown in* FIGURE 1, *because it is substituted by the wall (5), previously mentioned

3. proceed according to the packing with cellophane procedure (§ 2.1).

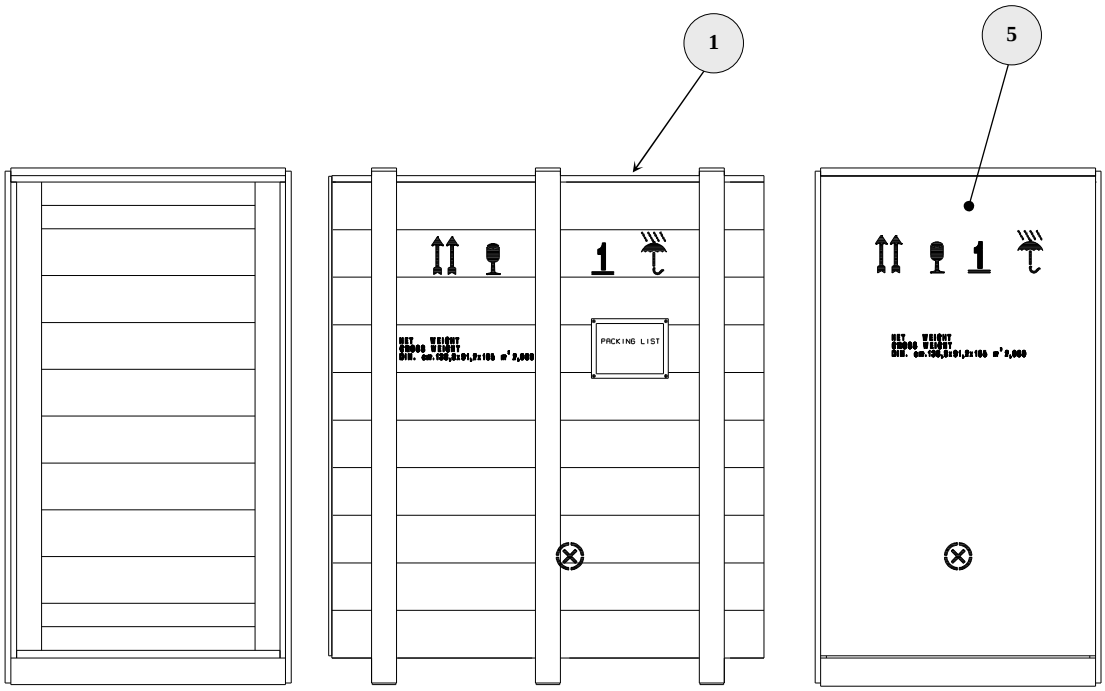

FIGURE 4 - WOOD CRATE

3 ELECTRICAL CONNECTIONS

The power supply single-phase alternate voltage and maximum absorbed current values are reported both on the unit label and on the technical data in the user manual.

Make sure that the power supply socket is approved for the values reported on the unit label

4 ACCEPTANCE TEST

The **ACCEPTANCE TEST** includes three main kinds of operations:

- checking cables and connectors
- mechanical checks
- electrical checks

4.1 CHECKING CABLES AND CONNECTORS

Visually control each cable and each connector, checking that there are no interruptions and/or crushing.

A.1 Power supply cable of the unit

A.2 Radiography control pushbutton cable

A.3 Connection cable between unit/X-ray Tube Head

4.2 MECHANICAL CHECKS

The mechanical checks include the following operations:

- **MOVEMENTS:** all the movements foreseen must be possible without excessive force or jerks
- **BRAKES:** all the movement locking brakes must be operating and easily applied

- **SOUNDNESS:** check that there are no breakages and/or damage which might have jeopardised operation and safety of the apparatus.

Follow the procedure below:

B.1 Parking brake of the radiological unit: push the unit without activating the parking brake on "dead-man control" (**21**) and check that the unit does not move

B.2 Turning the wheels of the radiological unit: release the parking brakes of the unit by pressing the "dead-man" lever (**21**). Move it a few metres and check that there are no movement imperfections and that there are no noises due to the wheels turning.

B.3 Correct operation of the anti-tilting assemblies:

- Tilting: place the unit on an horizontal surface in the transport position, carry out the tilting operation (SEE THE USER'S MANUAL) and check that the unit lowers over the rear but with slight friction due to the anti-tilting system.
- Flag movement: loosen the arm brake by means of the handle (**4**), lift the arm/X-ray tube head assembly into the horizontal position and turn it 90° onto one side. Then check that the unit does not tilt onto the side in question. Repeat the procedure on the opposite side.

B.4 Soundness of the control console: check that there are no scratches or breakages on the surface

B.5 Soundness and fixing of the casings: check that there are no scratches or breakages on the casings and that these are coupled correctly without any visible openings.

B.6 Balancing the pantograph arm: move the arm/X-ray Tube Head assembly vertically and check that it remains blocked for release by the operator in all the positions.

4.3 ELECTRICAL CHECKS

With regard to the electrical part, correct operation of the following must be checked:

- **SAFETY DEVICES**
- **SIGNALS**

NOTE: Remove the carters to carry out the electrical checks (SEE SECTION 2 - §2.1).

The procedure is described below:

C.1 POWER SUPPLY: connect the unit to the mains power supply;

C.2 INITIAL TEST: check that the initial automatic test is correct of the unit;

C.3 SOFTWARE: check that the visualization of installed software;

C.4 LOADING: check that the switching on the unit appears the increment of voltage on display until 320 V. The complete loading of the capacitors battery is ready in about 40/45 sec;

C.5 DISCHARGING: switch the unit off and check the complete discharging of the capacitors battery by means the switching off the **LD3** led mounted on **S25** board;

Do not carry out switching the unit On and Off

C.6 SET-UP DATA IN MEMORY**:** enter on SET-UP (SEE SECTION 3 - § 3) and check that the SET-UP data are in according with data selected (SEE SECTION 3 - § 3 – **TABLE 5***)*;

C.7 X-RAY TUBE FORMATION: when not in use the unit for a long time, before to use the unit normally, carry out the "formation" of the X-ray tube with a serial of exposures using the following data (carry out for each value of **kV** and **mAs** 10 exposures and keep a pause of 1 minute between an exposure and another one):

40 kV	➢	100 mAs
50 kV	➢	80 mAs
60 kV	➢	63 mAs
70 kV	➢	63 mAs
80 kV	➢	50 mAs
90 kV	➢	50 mAs
100 kV	➢	40 mAs
110 kV	➢	40 mAs
120 kV	➢	40 mAs

During this formation check with oscilloscope the value of **kV** [**S19** board **Tp11 (-)**; **Tp3 (+)**] and mA [**S19** board: **Tp11 (-)**; **Tp6 (+)**] on inverter. Select the oscilloscope in the following way:

CHANNEL A: 1 V/DIV (1V read is equal to 50 mA)

CHANNEL B: 1 V/DIV (1V read is equal to 20 KV)

BASE TIME: 25ms/DIV

In case kV wave form presents high voltage discharge or you hear discharge inside X-ray tube interrupt the sequence, wait few minutes before starting again; repeat the initial formation checking that the fuse **F7** is not interrupted (100A) (SEE. ELECTRICAL DRAW);

Warning: presence of 320 Vdc voltage!

C.8 EXPOSURE TIME: check that during exposure time the X-ray passage led until the end of exposure the display shows the real exposure time in seconds.

C.9 STAND BY: let the equipment switched on in “Stand by” mode, that means without make X-Ray exposure, and verify that after 30 minutes the capacitors battery is unloaded, as explained in § 1. Press any key of control console to restore the capacitors loading and repeat the whole procedure for a total time of at least 4 hour.

Maintenance

1 ROUTINE MAINTENANCE

1.1 GENERAL RECOMMENDATIONS

The radiological system requires regular checks and maintenance. The following recommendations have the aim of helping the operator to keep the apparatus in good working and safe conditions during service.

The system contains mechanical parts subject to wear according to use: following prolonged use, wear on parts may decrease safety during use. For this reason, it is essential for the checking and maintenance operations indicated below to be carried out consistently to protect the operators and patients against any damage caused by mechanical breakdowns.

Correct adjustment of the electrical and electronic systems has a direct influence on the operation of the system, on the quality of the image and on the electrical safety of the system, as well as on the level of exposure to radiation the operators and patients are subjected to.

The **MAINTENANCE PROGRAMME**, described in the following paragraphs, consists of controls and interventions to be carried out by specialised personnel authorised by the manufacturer. All maintenance operations are charged to the owner of the apparatus.

Should it be necessary to replace components or parts which may in any way condition the safety of the machine, only use original spare parts.

1.2 FREQUENT CHECKS AND INSPECTIONS

The operating personnel must be suitably trained to be able to carry out the daily and weekly checks indicated in **TABLE 1**.

The other 6-monthly and annual controls described in this chapter and the interventions described in the following chapters are reserved for qualified and authorised personnel of the technical assistance service.

TABLE 1

INTERVAL	CHECK	REFERENCE
DAILY CHECKS	Operation of the signals, displays and LEDs	
	Operation of the stationary brake	SERVICE MAN. – SECTION 2 - § 4.2
	Check that the warning and danger labels are intact	USER'S MAN. – SECTION 2 - § 1.7.1
WEEKLY CHECKS	Absence of oil leaks from the X-ray tube head	
	Absence of unusual noises in the X-ray tube head during X-ray emission	
6-MONTHLY CHECKS	General checks and inspections	SERVICE MAN. – SECTION 2 - § 1.3
ANNUAL CHECKS	Efficiency of the unit as described in the extraordinary mechanical maintenance	SERVICE MAN. – SECTION 2 - § 2.2

1.3 GENERAL CHECKS AND INSPECTIONS

Every six months, and in any case **according to local legislation in force**, the procedures indicated in the **ACCEPTANCE TEST** must be carried out completely.

Moreover the checks listed below must be added:

D.1 AC and DC power supply

D.2 Protection earth

D.3 Fixing and general state (dust and corrosion) of the boards and of the connectors

D.4 Centering of the X-ray tube head/collimator assembly (SEE SECTION 2 - § 2.3.6)

1.4 CLEANING AND DISINFECTION

Products with an high content of alcohol, corrosive and/or abrasive detergents or solvents must not be used to clean the surfaces of the apparatus.

To disinfect the system, only use methods in compliance with the laws in force regarding disinfection and protection procedures against explosion.

To carry out the cleaning and disinfection operations, take the following precautions:

- turn the system off and disconnect the mains power supply cable
- make sure that no liquid gets into the apparatus so as to avoid any short-circuits or corrosion of the electrical and electromechanical parts.

The unit has not to be used in presence of anaesthetic and/or infiammable disinfectant and cleaning products.

If, producing explosive gaseous, mixture, are used, make sure that gases are dispersed before switching on the unit.

2 SPECIAL MAINTENANCE

2.1 DISMANTLING THE UNIT CASINGS

Any maintenance operation requires the external casings of the unit to be dismantled as indicated below (SEE **FIGURE 5**):

- dismantle the cassette-holder basket (**1**):
  - open the basket, releasing it from the relative locking jacks (**2**)
  - release the respective hinges (**3**) located under the basket, by means of the pins on them
  - to completely remove the basket, it is necessary to release the earthing cable fixed to the sheet of the basket
- dismantle the plastic nuts (**4**) which lock the assembly casing to the keyboard (**5**).
- loosen and completely dismantle the release handle (**6**) of the arm/X-ray tube head rotation

ATTENTION: from this moment, the arm can rotate freely so do not move the unit because a sudden movement of the arm might occur, endangering people in the vicinity

- release the two casings (**7**) and (**8**) of the arm
- unscrew the screws (**9**) and (**10**) and dismantle the relative shaft casings (**11**) and (**12**)
- dismantle the tilting handle (**13**), if provided
- release the assembly casing with the keyboard (**5**), which was released previously (see instruction n°2). To remove the assembly completely, disconnect the cables connected to the keyboard
- dismantle the casing with the cable support (**14**). To remove the casing completely, it is necessary to release the earthing cable fixed to the aluminium cable support
- dismantle the remaining casings (**15**) and (**16**) from the rubber strip section of the base.

At this point the unit is completely accessible for any maintenance operations.

To remount the casings, repeat the procedure described above in reverse order, taking care to couple the casings correctly in their relative seats and grooves.

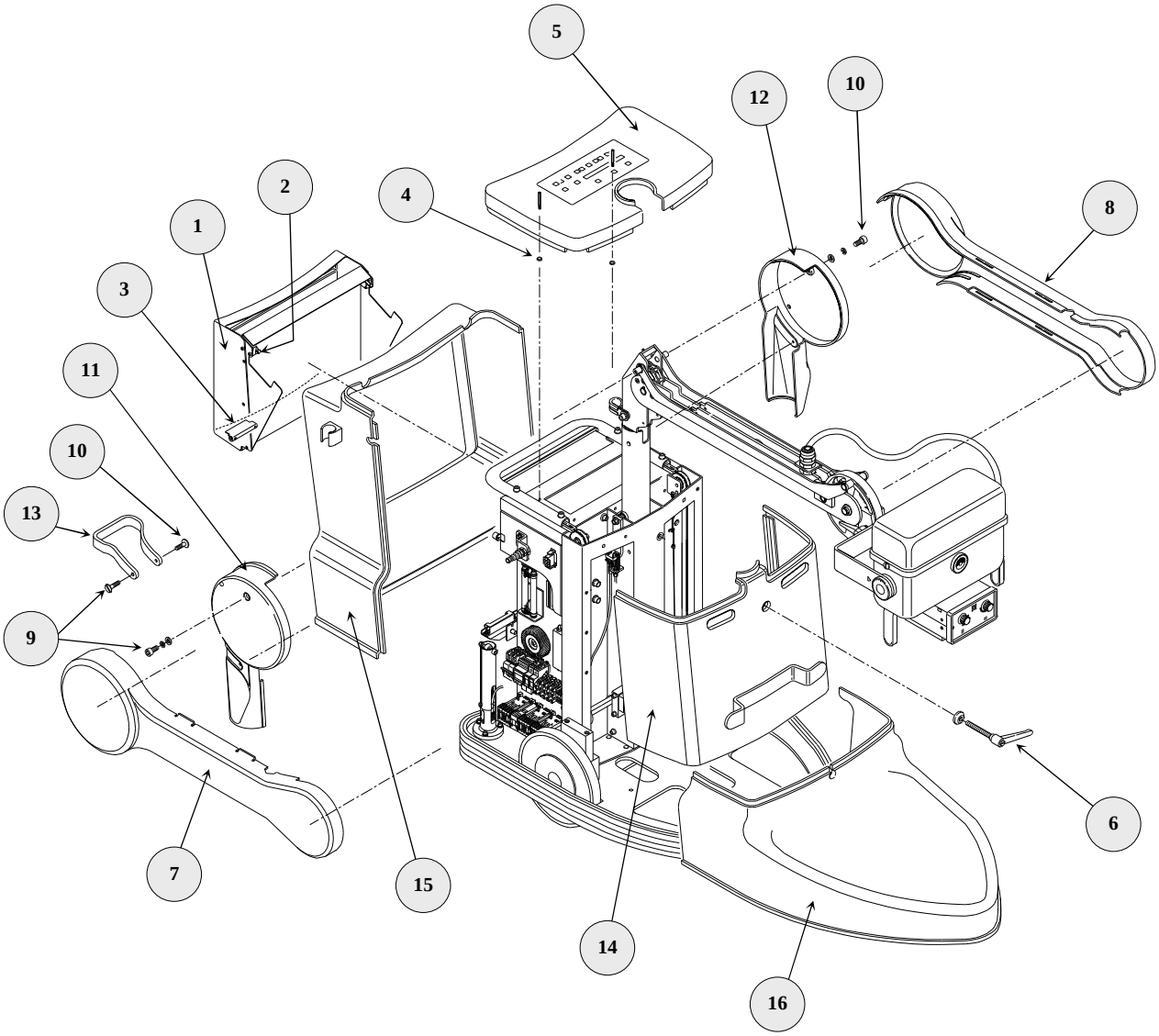

FIGURE 5 – EXPLODED VIEW OF COMPACT

2.2 EXTRAORDINARY MECHANICAL MAINTENANCE

Apart from the ordinary maintenance procedures (SEE § 1), it is advisable to carry out the checks indicated below (SEE **FIGURE 6**) annually, or following heavy use of the apparatus and, if necessary, adjust/replace the component (SEE § 2.3 and § 2.6).

Before starting, dismantle the unit casings as explained in § 2.1.

- Pantograph arm: check that there is grease in the moving parts. When there is any dirt or dust, remove the remaining grease and add some new grease as explained below:
  - in the rotation points of the tie-rods (**1**) and (**2**) of the pantograph system: Loctite 8150 (**A**) type grease
  - in the chain supporting part (**3**) on the cam (**4**): common C2 type grease (**B**)

  Also check that there are no worn or broken parts which need replacement
- X-ray tube head cables: check that the connection cables to the X-ray tube head have no cuts or stripping, particularly in the points corresponding with rotation of the shaft and with vertical arm movement
- vulcanized wheels: clean the internal surface of the 2 wheels (**5**) and (**6**) and the contact surface of the pads (**7**) and (**8**) with degreasers to guarantee better locking of the unit
- general check: check correct fixing of the parts mechanically assembled and screwed up.

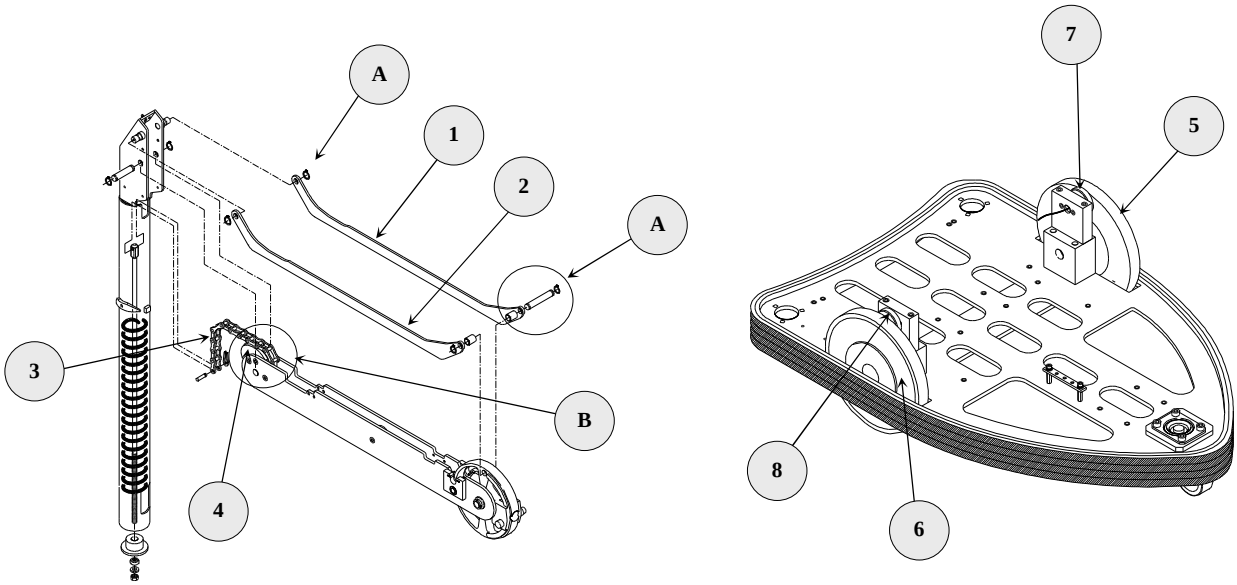

FIGURE 6 - SHAFT WITH ARM – BASE WHEELS

2.3 MECHANICAL ADJUSTMENTS

2.3.1 PARKING BRAKE (SEE FIGURE 7)

- The mobile unit remains braked:
  - the tension of the rope (**1**) is not sufficient: adjust it by means of the tensiometer (**2**)
  - the connection rod (**3**) to the pad (**13**) is not released or adjusted correctly: unscrew/screw up the rod, position the pad correctly (the space between the pad and wheel must be between 0.5 and 1 mm) and then lock using the relative counter nut (**4**)
- the mobile unit does not remain braked:
  - the two thrust dowels (**14**) of the springs (**15**) are not adjusted correctly and the pad (**13**) does not press correctly against the wheel (**10**): adjust by means of the dowels; if the spring (**15**) is lacking grease (common C2 type), add the amount needed
- when the wheels of the unit turn, there are noises or intermittent jerks:
  - carry out the adjustments indicated in the two previous points.

2.3.2 ANTI-TILTING SYSTEM (SEE FIGURE 7)

- In the flag position 90° to the side, the gas spring is not released and the machine is unstable, attempting to tilt over:
  - the tension of the spring control ropes (**11**) is insufficient: adjust by means of the tie-rods (**9**)
  - the cam/bearing system (**5**) controlled by rotation of the shaft (**8**) does not move correctly: grease the parts if necessary, or replace the return spring (**6**) or the bearing (**7**) activated by the cam anchored to the shaft
- it is not possible to carry out the Tilting function:
  - the gas spring control rope (**11**) is broken: replace it
  - the gas spring (**12**) is faulty: replace it.

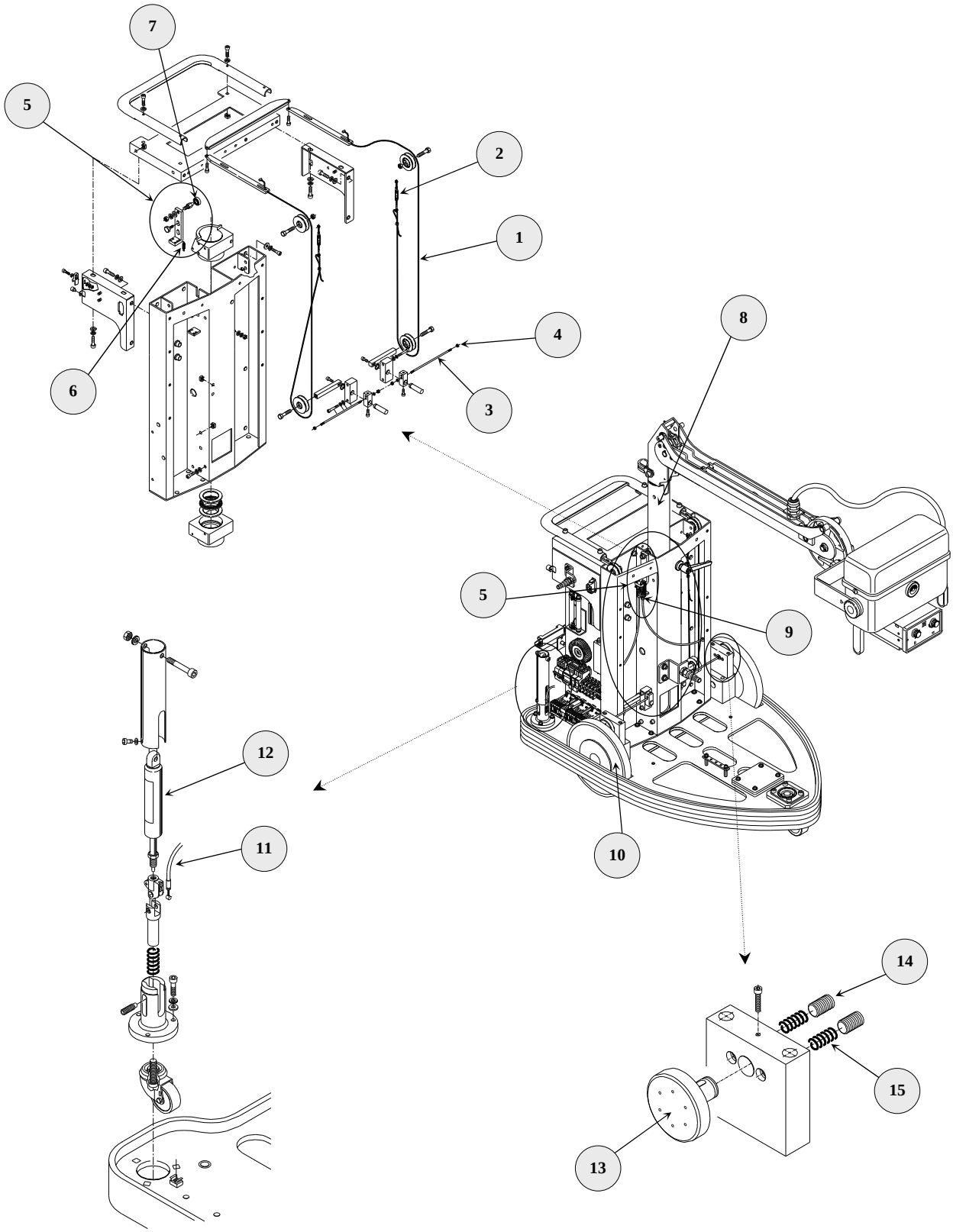

FIGURE 7 - EXPLODED VIEW OF MACHINE

2.3.3 ARM-X-RAY TUBE HEAD BALANCING SYSTEM (SEE FIGURE 8)

➠ Adjustment of the arm clutch

The balanced suspension system of the mobile unit allows smooth vertical movement of the arm and therefore of the x-ray assembly. This system has been studied and realised to reduce the need for maintenance to a minimum.

However, as time passes and due to continual stresses, the balancing system may lose a minimum amount of its efficiency. It is usually sufficient to adjust the boom pin (**2**) which acts directly on the clutch plates (**1**)

➠ Adjustment of the counterweight spring force

If the previous operation is not sufficient to restore the optimal balancing condition, it is necessary to carry out an adjustment of the spring thrust (**5**) as described below:

- with a setscrew spanner, loosen the boom pin (**2**), watching out for sudden and undesired movements of the arm and of the x-ray assembly which takes the arm to the highest possible position
- just for device with 115V power supply, disassemble the 115V power supply group (SEE SECTION 4 - EXPLODED DRAWINGS)
- with the help of a second person, lower the arm until the nut (**7**) in the window (**6**) is accessible
- using a spanner (mm 12), screw up or loosen the nut (**7**) through the window (**6**) present on the shaft with the spring (**4**). This operations modifies the pre-load applied to the compression spring (**5**)
- to check correct balancing of the spring, make sure that the arm can stay in the horizontal position without any support
- on completion of balancing, tighten the boom pin (**2**) to take the clutch back to a compression value which, although keeping the arm stopped in any position in a stable way, allows its movement without difficulty (balancing to be checked with the arm casing mounted)
- on completion of the operations, put the casings back into their original position.

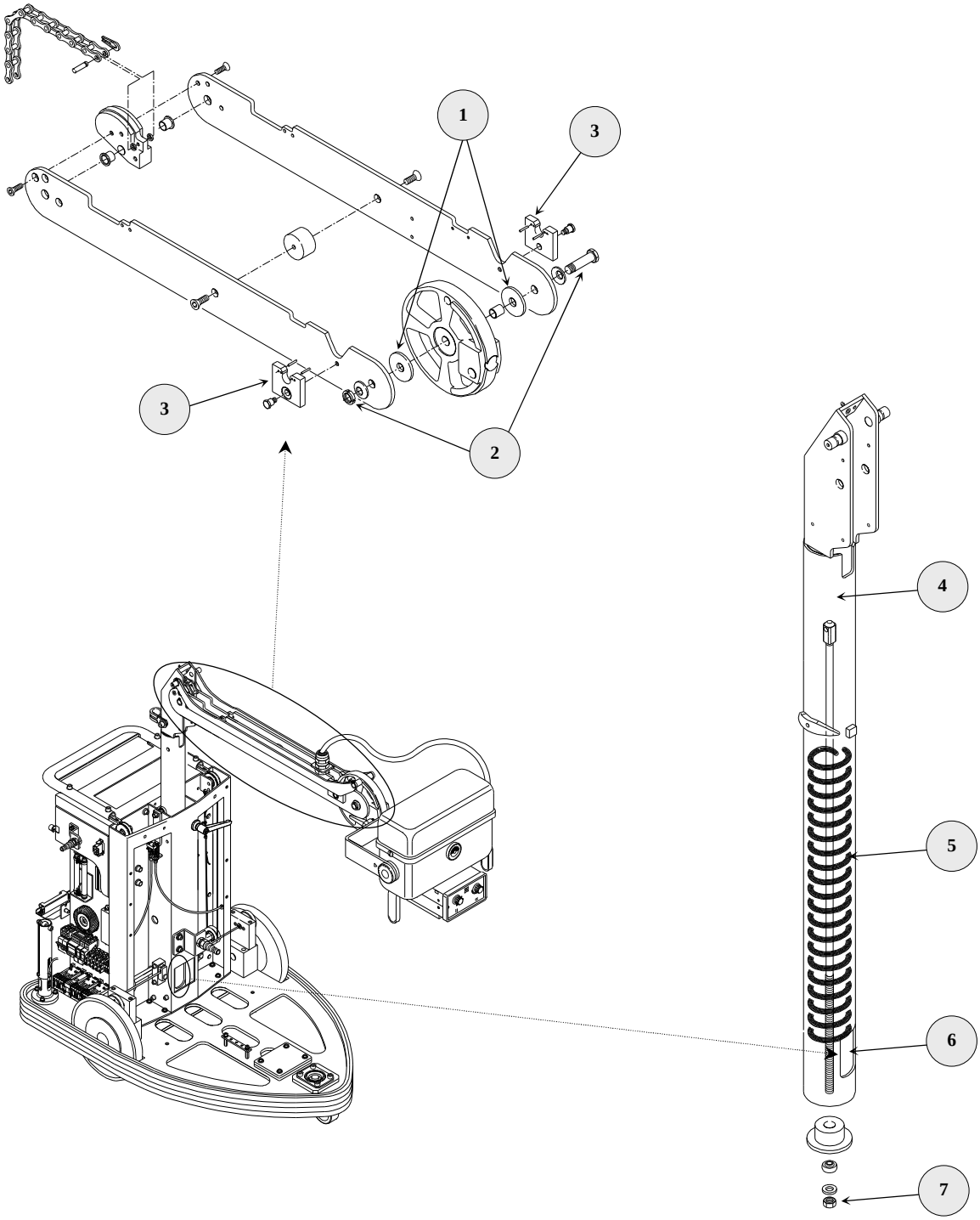

FIGURE 8 - EXPLODED VIEW OF THE PANTOGRAPH ARM

2.3.4 LOCKING THE ARM IN THE TRANSPORT POSITION (SEE FIGURE 8)

➠ If no lock is noticed or the arm tends to rise during the movement stage when putting the unit into the transport position (SEE USER'S MANUAL) with the arm completely retracted downwards, the arm stops (**3**) are worn, and must therefore be replaced.

2.3.5 X-RAY TUBE HEAD-COLLIMATOR ASSEMBLY ROTATION (SEE FIGURE 9)

ATTENTION – In cases where dismantling components of the X-ray tube head assembly or the assembly itself are foreseen, make sure the arm is locked so as to prevent any sudden and involuntary movements of the arm which would endanger the technician.

➠ 360° rotation is difficult or not correctly adjusted:

- inside the hole where the pin of the chrome-plated bracket (**1**) is housed dirt has accumulated due to wear on the parts in contact with the system of clamps (**2**) and (**3**): dismantle, clean carefully and lightly grease. (If this is not sufficient, replace the clamps). Then remount and lock using the correct force – just enough to make rotation of the bracket possible.

➠ X-ray tube head inclination (-15° ÷ +105°) is difficult or not correctly adjusted, or the X-ray tube head does not remain blocked in the position for operator release:

- dismantle the lateral goniometer (**4**) and clean it of any dirt caused by wear on the clutch plate (**5**), then remount it locking the screws (**6**) with the correct force to prevent rotation movement blocking.
- to guarantee correct pressure of the Belleville washers (**7**) which press on the clutch plate, it is also possible to increase or decrease the number of Belleville washers (**7**)
- if cleaning is not sufficient, the clutch plate (**5**) may be worn, and must therefore be replaced.

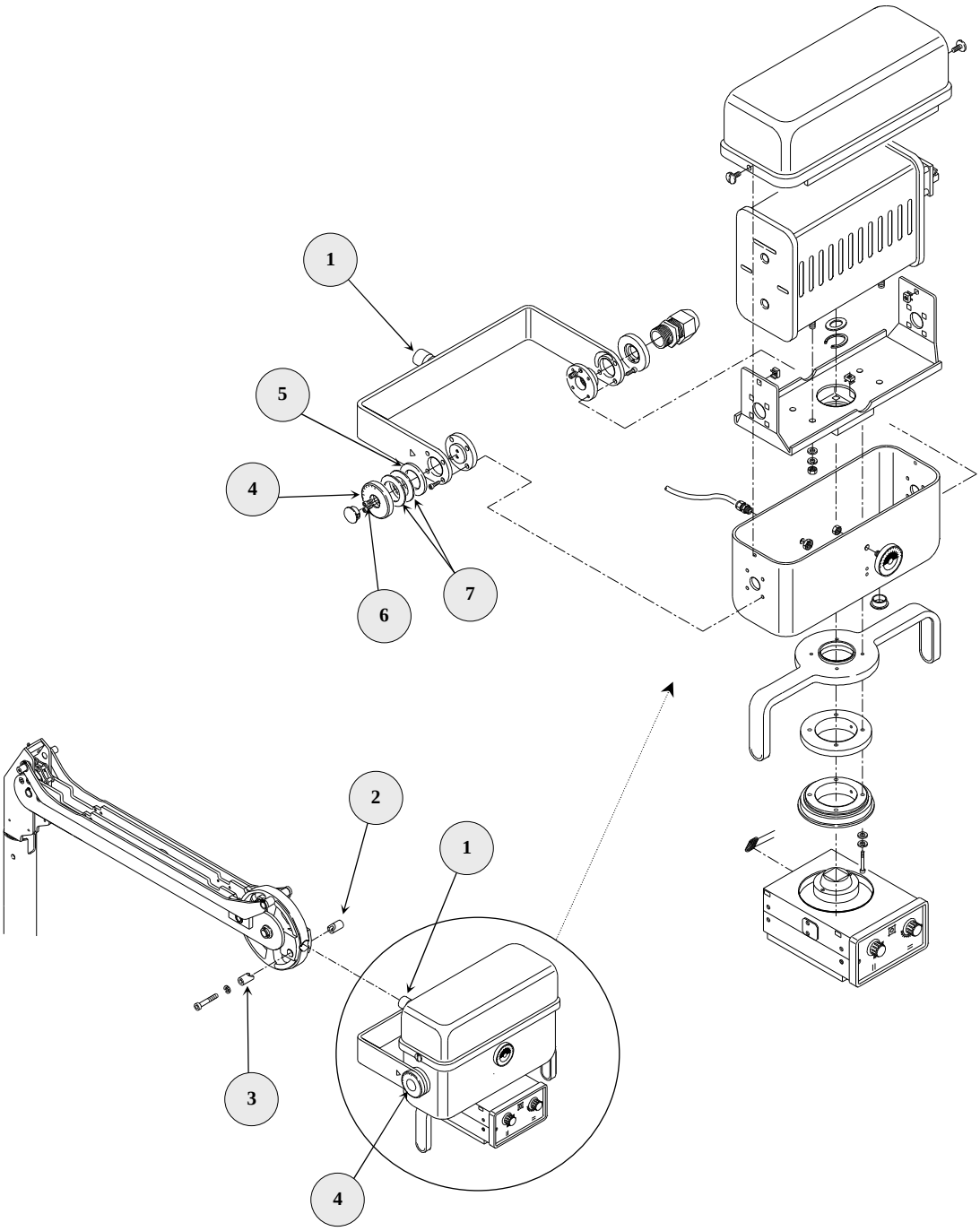

FIGURE 9 - X-RAY TUBE HEAD

2.3.6 CENTRING THE X-RAY TUBE HEAD – COLLIMATOR ASSEMBLY

➠ Preliminary centring:

- turn the x-ray assembly so that the x-ray output is turned upwards
- position the adapter ring of the collimator and screw it onto the x-ray assembly, without tightening the fixing screws completely so that the ring itself can make small movements
- position the adapter and the centring device inside the ring
- position the x-ray assembly behind a glass sheet sealed with lead so that the graded part of the centring device can be seen
- carry out an exposure and check the position of the luminous dot which appears on the graded circular scale of the centring device
- adjust the adapter ring of the collimator so that the luminous dot is exactly in the centre of the graded circular scale of the centring device
- lock the ring in question, fully tightening the four screws which fix it to the x-ray assembly.

➠ Final centring:

- position a washer at the centre of the collimator and, by means of the collimator light, position the “Fluorescent Screen” so that its centre coincides with the centre of the washer
- carry out an exposure and check that the washer has been impressed on the fluorescent screen.

Note: For any other centring operations of the collimator, please refer to the TECHNICAL MANUAL of the collimator.

2.4 ELECTRICAL TROUBLESHOOTING

Troubleshooting can be facilitated by the indications given in **TABLE 2**, which illustrates the most common incorrect operating conditions, showing their probable causes. In the presence of the following alarms visualized on the display, the X-ray exposition is disqualified and the console's alarm red led light up. In case it is also present after the execution of the suggested intervention, please contact the service assistance department.

TABLE 2

N°	NOTED FAULT	LIKELY CAUSE	RECOMMENDED INTERVENTION
1	The unit doesn't switch on (on key LED switched on)	No power supply on input	Check / Replace the S22-F2 or TR2-F24V fuse
	The unit doesn't switch on (on key LED switched off)	No power supply on input	Check / Replace the S22-F1 or F1 fuse (on input)
2	The apparatus works but does not emit rays – No alarm on the unit display	Radiography pushbutton fault	Check the Radiography pushbutton cable and connector
3	Alarm: "SUPPLY FAULT"	+15V or –15V fault of the S22 board supply	Check power supply (+15VA/-15VA/+24VA voltage on S22 voltage)
4	Alarm: "FILAMENT FAULT"	400 Hz power supply absent	Check / Replace TR2-F130V0 fuse
		X-ray tube filament interrupted	Replace the X-ray tube head
		S15 board fault	Replace the board
5	Alarm: "INVERTER FAULT"	If the indication appears on stand-by: P1 Set-Up on S22 board faulty	Carry out set-up as in Section 3 - § 4.2
		If the indication appears while carrying out X-ray: faulty on X-ray power circuit	Switching the unit off, switching it on and repeat the X-ray
		F2 and F3 fuses blown	Replace F2 and F3 fuses
		F6 and F7 fuses blown on the Power circuit	Replace F6 and F7 fuses
6	Alarm: "kV FAULT"	During a radiograph the effective kV are less than 85% of those set: fault on the power circuit	Switching the unit off, switching it on and repeat the X-ray
7	Alarm: "mA FAULT"	During an exposure the mA value is lower than the allowed limit	Switching the unit off, switching it on and repeat the X-ray
8	Alarm: "THERMIC SAFETY"	X-ray tube head overheated	Do not carry out any X-rays and wait for the X-ray tube head to cool down
		Breakage of the thermal sensor	Replace the thermal sensor located on the X-ray tube head and/or check the relevant wiring on S22 board
9	Alarm: "MAN STOP RX"	During a radiograph with cassette, the control pushbutton for X-ray command has been released early	Repeat the radiography
10	Alarm: "X-RAY LACKING"	Error in the high voltage generation circuit	Switching the unit off, switching it on and repeat exposure
11	Alarm: "MAX TIME"	The radiography time has exceeded the concurred limit	Check that the mA are correct Check the mA reading on board S22-Tp1 or S19-Tp6
12	Alarm: "STARTER FAULT"	During the anode preparation was not put into rotation	Check the fuses on board S21. Check the stator winding of the X-ray tube head

N°	NOTED FAULT	LIKELY CAUSE	RECOMMENDED INTERVENTION
		Fault on board S21 Fault on board S20	Replace board S21 Replace board S20
13	Alarm: "SWITCH OFF FOR 1 MIN"	Capacitors bank still loads	With the unit off wait 1 minute before switching it on
14	Alarm: "BATTERY FAULT"	Power Circuit Fault	Contact technical service
15	Alarm: "OVERVOLTAGE BATTERY"	Battery Circuit Fault	Contact technical service
16	Alarm: "X-RAY COMMAND ACTIVE"	The operator has pressed the radiography command before the system had finished the initial control stage	Release the radiography pushbutton and wait until the system is ready
17	Alarm: "X-RAY TUBE TOO HOT"	It is not possible to begin exposure since the remaining thermal units available are too few	Wait for the X-ray tube to cool down.
18	Alarm: "WAIT CONNECTION"	The keyboard does not communicate with the unit	Switching the unit off, switching it on and repeat exposure
19	Alarm: "POTTER FAULT" (only with Potter installed)	Potter Fault	Check the F4 - F5 fuses of the Potter power supply and the K3 relè

2.5 THERMOMAGNETIC CIRCUIT-BREAKER (SEE FIGURE 10)

The system is protected on the power supply circuit by a thermomagnetic circuit-breaker located inside the machine. Should this circuit-breaker trip, dismantle the cassette-holder basket (**1**) as explained in the first point of § 2.1 and reset the circuit-breaker (**2**) which is accessible at the back of the right-hand side of the machine.

Take special care not to touch the resistances placed above the thermomagnetic circuit-breaker because they may be very hot.

Any trip of the thermomagnetic circuit-breaker immediately after resetting can be an indication of incorrect operation of the system: contact the technical service assistance immediately.

In case of device with 115V power supply, another termomagnetic circuit-breaker is provided in the 115V power supply assembly (SEE ANNEX - § 1).

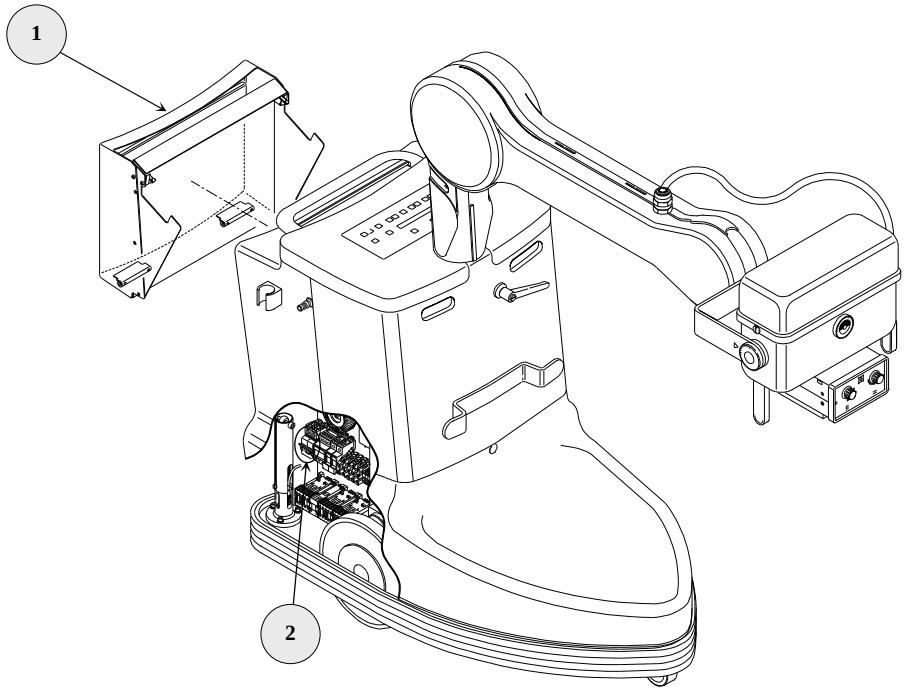

FIGURE 10 - THERMOMAGNETIC CIRCUIT-BREAKER

2.6 REPLACEMENT OF COMPONENTS

To dismantle the unit and for the list of spare parts, please refer to SECTION 4 – EXPLODED DRAWINGS and to § 2.1. If necessary, repeat the checks for the Acceptance Test regarding the component replaced (SEE SECTION 1 - § 4). Furthermore, remember that replacement of a component may require checks and adjustments to restore correct operation of the radiological unit. For this purpose, please see § 2.3 for the mechanical parts, and **TABLE 3** and SECTION 3 of this manual for the electrical parts.

TABLE 3

COMPONENT REPLACED	ADJUSTMENT AND CHECKS	REFERENCE
15 BOARD	Verify **mA** set up in SET UP	SECTION 3 - § 5
S19 BOARD	Check of **kV** e **mA**	SECTION 3 - § 5.1 and 8
S20 BOARD	Check Run voltage	SECTION 3 - § 2
	Check start 800 ms	
S22 BOARD	Check max Set kV (P1)	SECTION 3 - § 4.3
	Check max exposure time (P2)	SECTION 3 - § 4.1 and 4.2
S25 BOARD	Check max voltage of battery	SECTION 3 - § 7
S62 BOARD	Check LCD Display contrast (P1)	

Before replacing any component it is necessary to make the unit safe in order to prevent dismantling of the parts causing sudden and involuntary movements, which endanger personnel in the vicinity. In particular, pay attention to the following:

- dismantling the X-ray tube head-collimator assembly
  - add the counter-weight on the pivoting wheel of the unit or under the tilting pedal to prevent the unit itself tilting over
  - secure the pantograph arm to the base of the unit (using the ropes) to prevent the arm from making undesired movements caused by the lack of weight which occurs when the X-ray tube head is removed
- anti-tilting assembly system
- rotation of shaft with arm–X-ray tube head
- vertical movement of the pantograph arm
- parking brake system.

2.7 LIST POTENTIOMETERS

BOARD	POTENTIOMETER	VALUE	NAME	NOTE
S15	P1	5K	MANUAL SET I FIL (ONLY FOR TEST)	Only factory adjustment
	P2	5K	MAX I FG	Only factory adjustment
	P3	5K	MAX I FP	Only factory adjustment
S17	P1	10K	FEEDBACK KV+	Only factory adjustment
	P2	10K		Only factory adjustment
	P3	10K	FEEDBACK KV-	Only factory adjustment
	P4	10K		Only factory adjustment
S19	P1	2K	MAX CURRENT	Only factory adjustment
	P2	2K	FREQUENCY SET	Only factory adjustment
	P3	2K	MA FLUORO OFFSET ADJ.	N.U.
	R66		FEEDBACK MA ADJ	Only factory adjustment
S20	P1	1K	RUN VOLTAGE	Only factory adjustment
	P2	1M	START 800MS	Only factory adjustment
S22	P1	2K	MAX SET KV	Only factory adjustment
	P2	100K	MAX TIME RAD	Only factory adjustment
S25	P1	5K	MAX V CAPACITORS BANK	Only factory adjustment
S62	P1	20K	LCD CONTRAST	Only factory adjustment

2.8 LIST LEDS

BOARD	LED	COLOR	NAME	NOTE
S15	LD1	YELLOW	+24V	
	LD2	GREEN	+15VA	
	LD3	RED	SAFETY MAX I FIL	
S19	LD1	YELLOW	COM-RX	
	LD2	RED	KV MAX	
	LD3	RED	KV > 110%	
	LD4	RED	KV MIN	
	LD5	RED	I MAX	
	LD6	YELLOW	COM. 1	
	LD7	YELLOW	COM. 2	
	LD8	YELLOW	PRE-RX	
	LD9	GREEN	+15V	
	LD10	GREEN	-15V	
S20	LD1	YELLOW	STARTER ON	
	LD2	GREEN	STARTER OK	
	LD3	YELLOW	FLUORO PREP (N.U.)	
S22	DL1	YELLOW	N.U.	
	DL2	YELLOW	N.U.	
	DL3	YELLOW	N.U.	
	DL4	YELLOW	N.U.	
	DL5	YELLOW	N.U.	
	DL6	YELLOW	N.U.	
	DL7	YELLOW	N.U.	
	DL8	YELLOW	N.U.	
	DL9	YELLOW	STARTER OK	
	DL10	YELLOW	PREP K1A	
	DL11	YELLOW	RAD	
	DL12	YELLOW	KV 85%	
	DL13	YELLOW	POTTER OK	
	DL14	GREEN	THERMIC	
	DL15	YELLOW	KV OK	
	DL16	GREEN	FIL OK	
	DL17	YELLOW	PRE RX	
	DL18	YELLOW	RX	
	DL19	YELLOW	PREP K1A	
	DL20	YELLOW	START POTTER	
	DL21	GREEN	+24VA	
	DL22	GREEN	+24VA	
	DL23	YELLOW	ON/OFF	
	DL25	GREEN	+24VA	
	DL26	YELLOW	CAPACITORS BANK CHANGE	
	DL27	YELLOW	CAPACITORS BANK CHARGE	
	DL28	YELLOW	OUT_WD	
	DL29	YELLOW	PREP STARTER	
	DL30	YELLOW	FP	
	DL31	YELLOW	CORR MA	

2.9 LIST FUSES

BOARD	NAME	TYPE	NOTE
LOADING BATTERY	F2	16A	Input power supply protection
	F3	16A	
INVERTER	F6	63A	Inverter protection
	F7	63A	
TR1 TRANSFORMER	F1	200MA-T	TR1 Transformer protection
TR2 TRANSFORMER	F230V	2A-T	TR2 Transformer protection
	F115V	3.15A-T	
	F135V	1A-T	
	F24V	2A-T	
	F12V	10A-T	
POTTER BUCKY	F4V	2A-T	Potter Bucky protection(Optional)
	F5V	2A-T	
AUTOTRANSFORMER	F10	2A-T	115Vac power supply protection(Optional)
S21	F1	10A-T	S21 Board Input power supply protection
	F2	10A-T	
	F3	500MA-T	S21 Board TR1 Transformer protection
S22	F1	1A-T	Bridge Rectifier protection (24Vac)
	F2	2A-T	
S25	F1	80mA-T	Input power supply protection S25 Board
S81	F1	200mA-T	Group 1Bridge Rectifier protection (24Vac)
	F2	200mA-T	
	F3	200mA-T	Group 2 Bridge Rectifier protection (24Vac)
	F4	200mA-T	
	F5	200mA-T	Group 3 Bridge Rectifier protection (24Vac)
	F6	200mA-T	
	F7	200mA-T	Group 4 Bridge Rectifier protection(24Vac)
	F8	200mA-T	
	F9	315mA-T	S81 Board Input power supply protection

3 SPARE PARTS

In case of replacing of parts that can be negative for the safety of the machine, use only original parts. For the list of the spare parts and relative codes make reference to the SECTION 4 – EXPLODED DRAWINGS.

NOTE: When you require spare parts, it is necessary to tell the code of the piece and the serial number of the unit too.

X-ray settings

1 INTRODUCTION

The radiological system is fully regulated in the factory: it is therefore only necessary to install it in order to use it.

All the information contained in this section and SECTION 2 of this manual must be used when extraordinary maintenance is necessary.

In the case of any intervention, it is essential for the adjustment operations to be carried out in the sequence indicated.

In Table 4 indicates the potentiometers which do not require any further adjustments since they have already been regulated and sealed in the factory.

TABLE 4

BOARD	POTENTIOMETER	DESCRIPTION
S15	P1	Manual Setting of the filament current
	P2	Maximum current of large focus
	P3	Maximum current of small focus
S17 (X-ray tube head)	P1	Return of the kV+
	P2	
	P3	Return of the kV-
	P4	
S19	P1	Maximum current
	P2	Frequency setting
S22	P1	Maximum kV setting
	P2	Maximum exposure time
S25	P1	Maximum battery voltage

NOTE : Jumper S19-J2A and J2B ON: safety kV_{max} set up for rotating anode

Jumper S19-J2A and J2B OFF: safety kV_{max} set up for stationary anode

1.1 DIP SWITCH

Here follows the function of the dip-switch **S22-SW1** pins:

1 – Only factory adjustment

2 – Only factory adjustment

3 – ON – It doesn't display the name when switched on

4 – Only factory adjustment

5 – ON – Small Focus when switched on

6 – Only factory adjustment

7 – Only factory adjustment

8 – Only factory adjustment

2 ROTATING ANODE STATOR POWER SUPPLY ADJUSTMENT

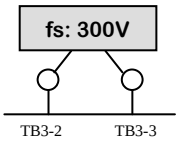

- Connect an **AC** voltmeter (*true* RMS if possible) with full-scale set at **300 V** between the **TB3-2** and **TB3-3** test points of board **S21** (power supply of the main winding);
- connect the probe of an oscilloscope between **IC2-8 (+)** and **Dz1 Anode (-)** of board **S20** and prepare the instrument to read a time of **800 ms**;
- take the **RADIOGRAPHY COMMAND PUSHBUTTON.**

For maximum operator safety, at this point it is advisable to temporarily disable the X-ray command signal by disconnecting the wire coming from S22-X4-3.

- only press the **first click** of the **RADIOGRAPHY COMMAND PUSHBUTTON** (*preparation pushbutton*);
- check that the stator is supplied with a voltage of about **230 Vac** for approximately **0,8 seconds**. If necessary, adjust this time interval using potentiometer **P2** of board **S20**;
- check that once the 0,8 seconds have passed the stator is supplied with a voltage of about **70 Vac**. If necessary, adjust this value by using potentiometer **P1** of board **S20**.

3 SET-UP PROCEDURE

To access the modality of SET-UP procedure to follow what underneath reported:

- press the keys of the console indicated to side at the same time

- the wording **"SET-UP PROCEDURE ?"** will appear on the display; to confirm selection, press the key indicated at the side marked with "**YES**", whereas to cancel the procedure, press the key marked "**NO**".

YES

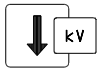

NO

NOTE: In the Set-up procedure, the functions for editing the content of the fields shown on the display have been assigned to the keys as indicated below.

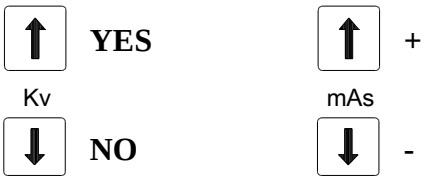

TABLE 5 – MINIMUM, MAXIMUM AND OF DEFAULT VALUES OF SET-UP ADJUSTMENT

FUNCTION			VALUE		
DIRECTORY		FILE	MINIMUM	MAXIMUM	DEFAULT
kV ADJUSTMENT		KV40	300	600	380
		kV120	1000	1500	1190
SMALL FIL. ADJ	7.5 kW	150 mA (40 kV)	1000	2000	1600
		75 mA (100 kV)	900	2000	1360
LARGE FIL. ADJ	30 kW	425 mA (40 kV)	1000	2000	1750
		300 mA (100 kV)	900	2000	1560
MAS ADJ		kV 050 (50 mAs)	250	1000	530
BATTERY		V = 320			

3.1 SERVICE MENU

When the unit is off, pushing both the keys underneath you enter the SERVICE MENU of the unit which subsequently visualizes the following data:

- name of the device and software version
- chosen anatomical program
- X-ray tube model
- total number of radiographic exposures
- total mAs accumulated.

4 kV ADJUSTMENT

4.1 ADJUSTMENT "SET-UP" VOLTAGE

The **SET KV** voltage is supplied by the microcomputer and must be adjusted according to the relationship **kV/20** (i.e.: ***1V = 20kV***).

- First of all, enter the **SET-UP** procedure, following the instructions indicated in the previous paragraph;
- On board **S19** connect the probes of a **Vdc** digital multimeter between **CP1-10 (+)** and **TP11 (-)**;
- in Set-up select "**kV ADJ at 40 kV**";
- adjust the value until a reading of **2,00 V** is obtained on the voltmeter;

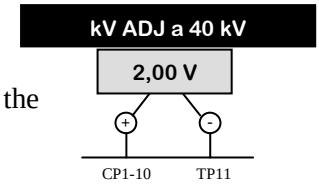

- in SET-UP select "**kV ADJ at 120 kV**";
- adjust the value until a reading of **6,00 V** is obtained on the voltmeter;
- exit the **SET-UP** procedure by using the key;
- then select **100 kV**, **80 kV** and **60 kV**, checking that the voltage read on the voltmeter is $V_{read} = (Kv_{SET}/20) \pm 25\ mV$.

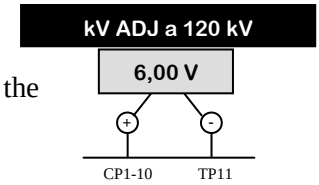

4.2 ADJUSTMENT OF MAXIMUM KV SETTING SAFETY

The maximum parameter value of **SET KV** under operating conditions must be **6 V**, corresponding to **120 kV**. The **MAX SET KV** safety device intervention is normally set to **130 KV**.

- connect the probes of a **Vdc** digital voltmeter between test points **TP10 (+)** and **TP9 (-)** of board **S22**;
- turn the system on and use potentiometer **P1** until a reading of **6,5 V ± 0,1 V** is obtained.

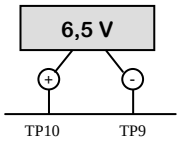

4.3 CHECKING MAXIMUM KV SETTING SAFETY

- Connect the voltmeter to test points **TP10 (+)** and **TP9 (-)** of board **S22**
- lower the **MAX SET KV** safety intervention to **100 kV** adjusting potentiometer **P1** until a reading of **5 V ± 0,1 V** is obtained on the voltmeter;
- checking that by setting the **kV** to a higher value than **100 kV** the "**KV FAULT**" alarm goes off;
- put the **MAX SET KV** safety intervention back to **130 kV** using potentiometer **P1** again until a reading of **6.5 kV ± 0,1 V** is obtained.

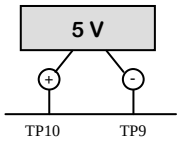

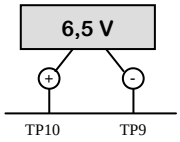

5 ADJUSTMENT OF THE FILAMENT CURRENT

The following tables indicate the **mA** anode values associated with the **kV** and the typical **FILAMENT CURRENTS** determined on a sample **X-RAY TUBE HEAD** for **30 kW** and **7.5 kW** power.

TABLE 6

		RADIOGRAPHY – 30 KW	
Set kV	**kV**	**mA**	**$I_{Filament}$**
S22: TP10 – TP9 [V]	on display [kV]	S19: TP6 - TP11 [1V=10mA]	S15: CP6-2 [mA]
2	40	425	870
2,5	50	400	817
3	60	375	822
3,5	70	355	803
4	80	337	814
4,5	90	320	806
5	100	300	795
5,5	110	204	769
6	120	141	753
		Pre-switching:	466

TABLE 7

		RADIOGRAPHY – 7.5 KW	
Set kV	**kV**	**mA**	**$I_{Filament}$**
S22: TP10 – TP9 [V]	on display [kV]	S19: TP6 - TP11 [1V=10mA]	S15: CP6-2 [mA]
2	40	150	826
2,5	50	150	777
3	60	125	757
3,5	70	107	747
4	80	93	737
4,5	90	83	727
5	100	75	716
5,5	110	68	706
6	120	62	696
		Pre-switching:	471

5.1 ADJUSTMENT OF FILAMENT CURRENT

NOTE: by Filament Current the current which runs through the primary winding of the transformer supplying the power to the filament itself is intended (Coolidge Transformer).

➠ **MEASUREMENTS**

- To measure the Filament Current, connect an ammeter with *true RMS* reading in series with terminal **CP6-2** of board **S15**. Set the full-scale to **1A** in **AC**.

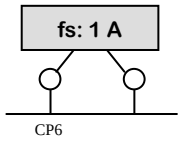

- to measure the anode **mA** in **RADIOGRAPHY**, connect the probe of an oscilloscope between test points **TP6 (+)** and **TP11 (-)** of board **S19** to display the wave form of the mA (reading correspondence is ***1V = 50 mA***) and between test points **TP3 (+)** and **TP11 (-)** of board **S19** to display the wave form of the **kV** (reading correspondence is ***1V = 20 kV***).

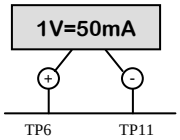

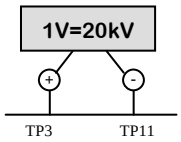

➠ **PROCEDURE** (example with Small focus LP 7,5 kW)

- activate the **SET-UP** procedure;
- select "**SMALL FIL ADJ**";
- adjust the "**DAC**" value set until a filament current, displayed on the digital voltmeter, equal to the one indicated in **TABLE 7** for **40 kV (826)** is obtained – Typical **DAC 1600** – **FIGURE 11**;
- give the **X-ray** command and check that the **anode mA** are **150**. If necessary, adjust the SET-UP until the desired value is obtained;
- proceed with SET-UP;
- adjust the set value of the "**DAC**" until a **filament current**, displayed on the digital voltmeter, equal to the one indicated in **TABLE 7** for **100 kV (716)** is obtained – Typical **DAC 1360** – **FIGURE 12**;

- give the **X-ray** command and check that the **anode mA** are **75**; if necessary, adjust the **SET-UP** until the desired value is obtained;
- proceed with SET-UP by selecting "**LARGE FIL ADJ**";
- Repeat the same operations described for "**SMALL FIL ADJ**" with **40 kV** and **100 kV**. For the anode and filament current mA values, refer to **TABLE 6**.
- Exit **SET-UP**.

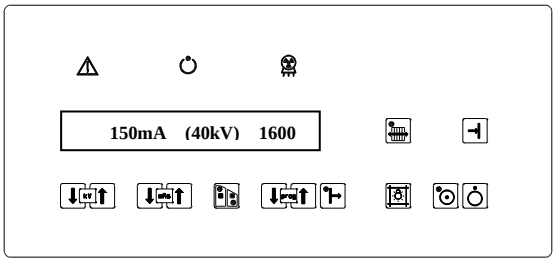

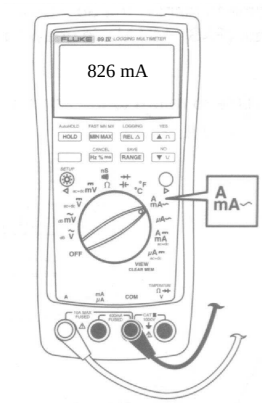

FIGURE 11 – DAC (40 KV) ADJUSTMENT

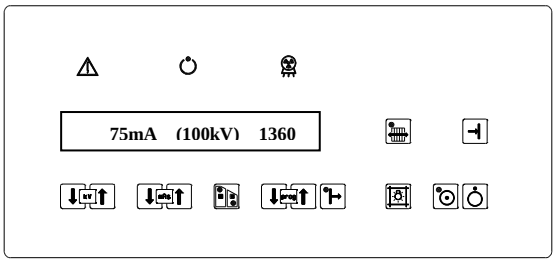

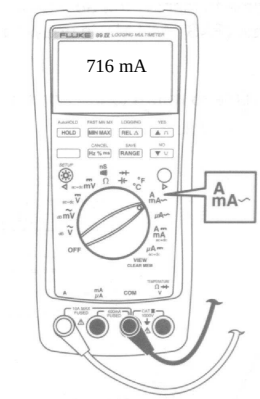

FIGURE 12 – DAC (100 KV) ADJUSTMENT

6 mAS ADJUSTMENT

➠ **MEASUREMENTS**

- Remove the bridge between terminals **CP3-1** and **CP3-3** of board **S19**
- connect a mAsmeter between the above-mentioned terminals.

➠ **PROCEDURE**

- activate the **SET-UP** procedure
- select "**mAS ADJ**" and give the **X-ray** command
- check that the **mAs** value on the instrument is really the one set (**50 mAs** – Typical **DAC 0530**); If necessary, adjust the SET-UP until the desired value is obtained
- exit **SET-UP**.

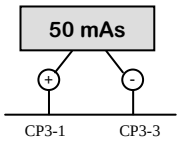

7 ADJUSTMENT OF THE BATTERY VOLTAGE

➠ **MEASUREMENTS**

- To measure the battery voltage, connect a voltmeter with true RMS reading between terminals **CP2-1 (+)** and **CP2-3 (-)** of board **S25**.

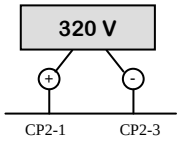

Warning: presence of 320 Vdc voltage

➠ **PROCEDURE**

- activate the **SET-UP** procedure;
- select "**V BATTERI ADJ**";
- Adjust the Set-up until the point in which the battery voltage measure value, reaches the battery voltage set value (tip. **320V**);
- exit **SET-UP**.

8 CHECKING THE RADIOGRAPHIC PARAMETER

After having completed the operations indicated in the previous paragraphs (§ 2, § 4, § 5), it is necessary to check the values of the signals proportional to the **kV** and to the **mA** which come from the **INVERTER**. The tolerance for the **kV** signal is **± 5%** whereas for the **mA** it is **± 15%.**

NOTE: If the kV value is not correct, it is necessary to repeat the SET kV adjustment.

NOTE: An oscilloscope with two channels is required for the checks below.

8.1 CHECKING KV AND MAS DURING RADIOGRAPHY

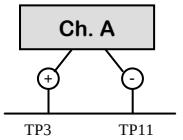

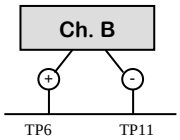

- Connect the probe of the oscilloscope as indicated below:

  CHANNEL A: **TP3 (+) – TP11 (-)** of board **S19** (**REAL kV**);

  TIME BASE: 10 ms
- If necessary, connect the probe of the oscilloscope as indicated below:

  CHANNEL B: **TP6 (+) – TP11 (-)** of board **S19** (**mA**);

  TIME BASE: 10 ms
- set the minimum value of the **kV (40 kV – 425 mA)**
- give the X-RAY command and check that the values read on the oscilloscope correspond with those indicated in **TABLE 8**; (**FIGURE 13** shows an example of a 100 kV wave form)
- repeat the previous operations, setting the **kV** values to **80 kV** and **120 kV** for **7.5 kW** power.

TABLE 8 – 30KW

kV		mAs		mA	Time (s)
Set	*Acceptance range* S19: TP3 - TP11 [1V = 20 kV]	*Set*	*Acceptance range* (±10%)	*Theoretical*	*Theoretical*
40	38 ÷ 42	16	14.5 ÷ 17.5	425	0.037
80	76 ÷ 84	16	14.5 ÷ 17.5	337	0.047
120	114 ÷ 126	16	14.5 ÷ 17.5	141	0.113

TABLE 9 – 7.5KW

kV		mAs		mA	Time (s)
Set	*Acceptance range* S19: TP3 - TP11 [1V = 20 kV]	*Set*	*Acceptance range* (±10%)	*Theoretical*	*Theoretical*
40	38 ÷ 42	8	7.2 ÷ 8.8	150	0.053
80	76 ÷ 84	8	7.2 ÷ 8.8	93	0.086
120	114 ÷ 126	8	7.2 ÷ 8.8	62	0.129

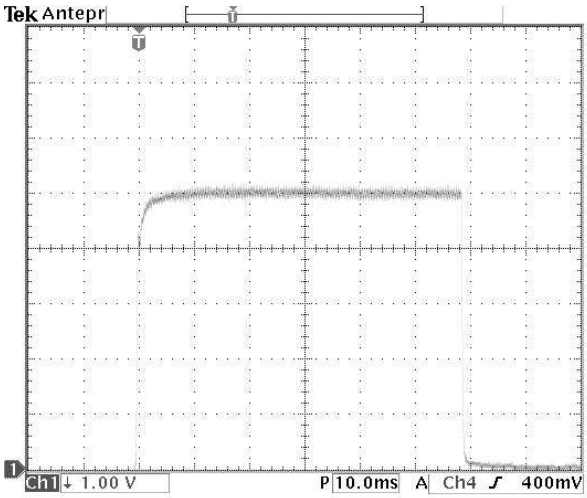

FIGURE 13 – ACQUISITION OF THE KV WAVE FORMS DURING RADIOGRAPHY [100 KV – 16 MAS – 30 KW]

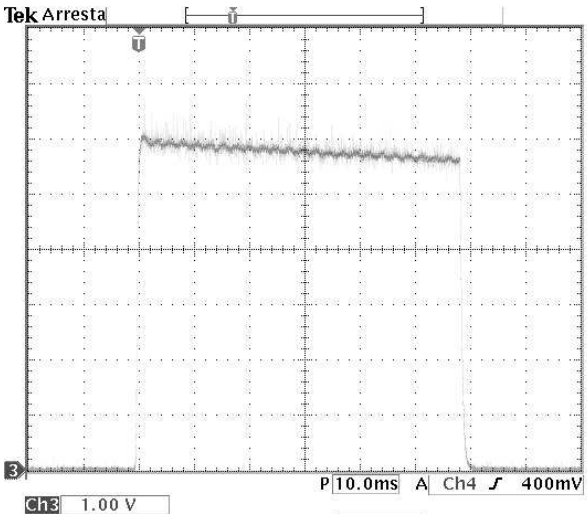

FIGURE 14 – ACQUISITION OF THE MA WAVE FORMS DURING RADIOGRAPHY [100 KV – 16 MAS – 30 KW]

White Page

Drawings

Index

Document n°

Exploded views

Electrical diagrams

Topographic diagrams

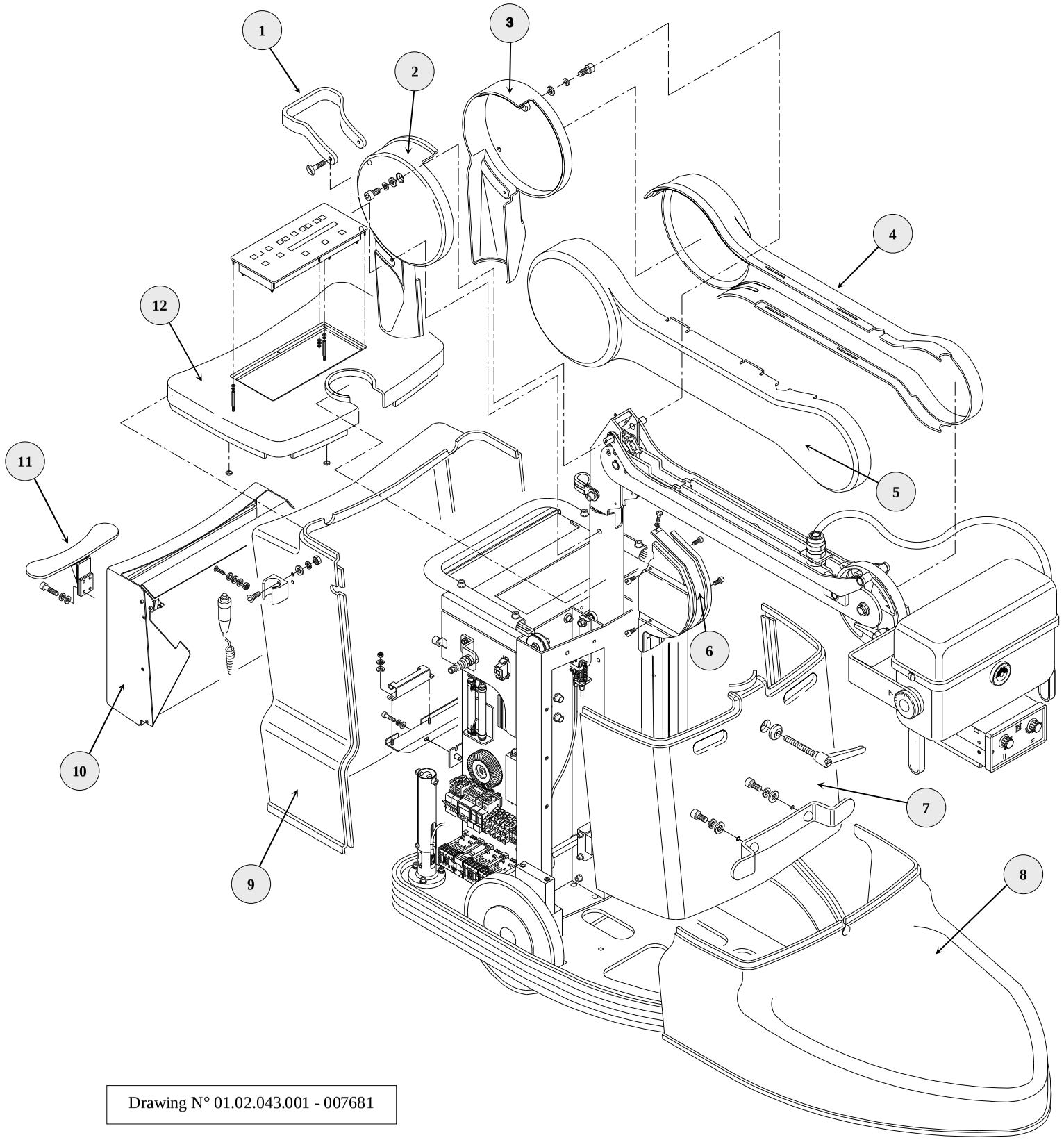

Drawing N° 01.02.043.001 - 007681

N°	DESCRIPTION		CODE	NOTE
MOBILE UNIT			01.02.043.001	
1	Handle for tilting polished	grey	01.02.052.006	
		green	01.02.052.004	
2	Carter with flat band stock		01.02.010.143	
3	Carter without flat band stock		01.02.010.144	
4	Carter with flat band arm		01.02.018.014	
5	Carter without flat band arm		01.02.018.015	
6	Carter prot. inf. articulated Arm		01.02.010.085	
7	Carter back		01.02.010.140	
8	Carter basement		01.02.010.141	
9	Carter front		01.02.010.139	
10	Cassette holder basket		01.02.043.003	
11	Pedal for tilting		01.02.010.052	
12	Carter control panel		01.02.010.142	

MECHANICAL EXPLODED VIEW

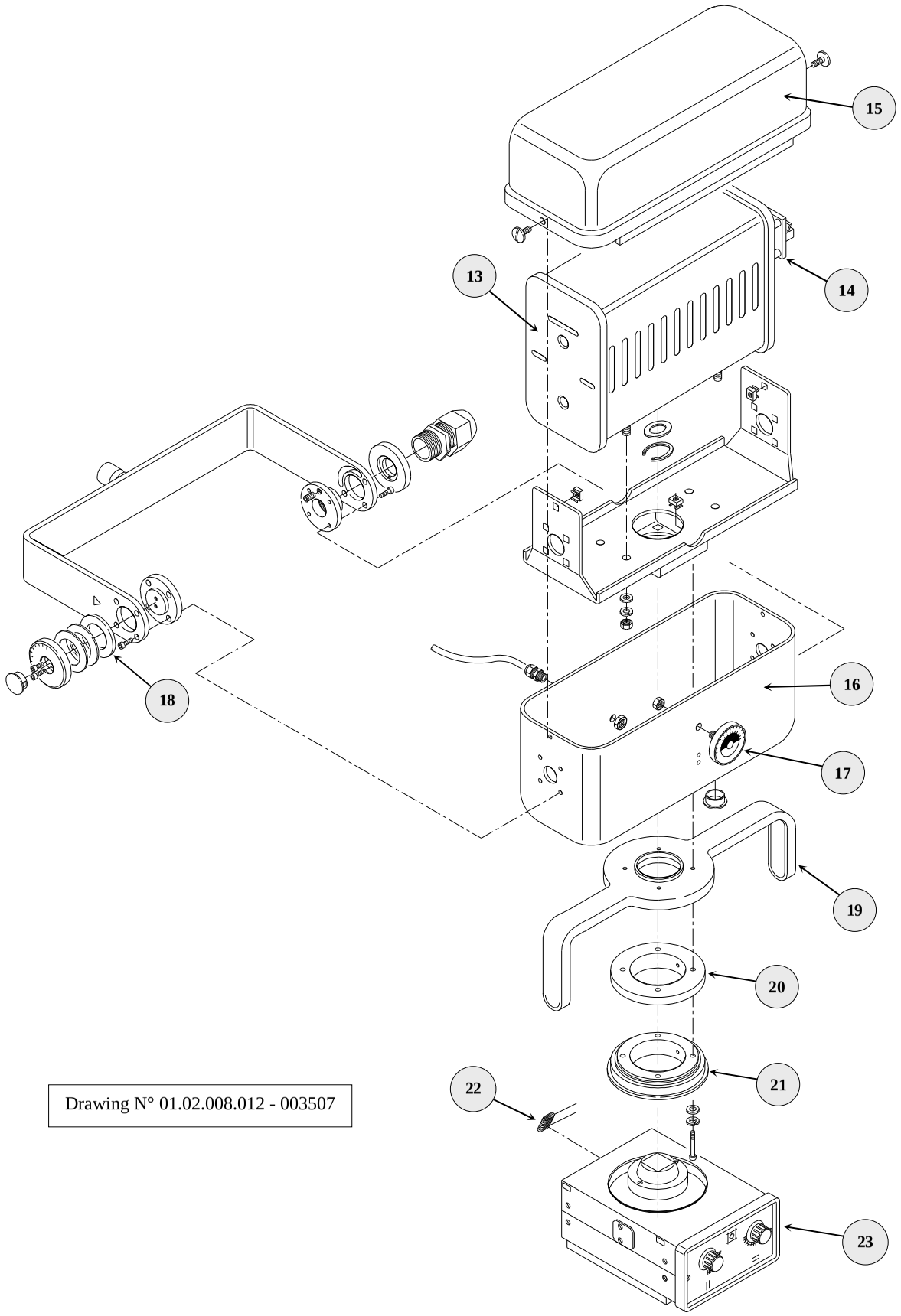

Drawing N° 01.02.008.012 - 003507

N°	DESCRIPTION		CODE	NOTE
X-RAY TUBE HEAD SUPPORT GROUP			01.02.008.012	
13	X-ray tube head 100KHz		Depends on the customer	
14	S17/A X-ray tube head board		01.17.008.025	
15	Sup. carter with flat band		01.02.008.002	
16	Inf. carter without flat band		01.02.008.003	
17	Goniometer	light blue	01.02.014.009	
		light green	01.02.010.148	
18	Brake disk Ø 62.5		01.02.001.108	
19	Small X-ray tube head handle	grey	01.02.008.006	
		green	01.02.025.058	
20	Distance ring for rotating group		01.02.025.065	
21	Rotating adaptor Ralco mm. 18		49.18.002.001	
22	Lamp for centering 12V 100W		49.05.012.001	
23	Collimator R105 12V		49.18.006.001	

MECHANICAL EXPLODED VIEW

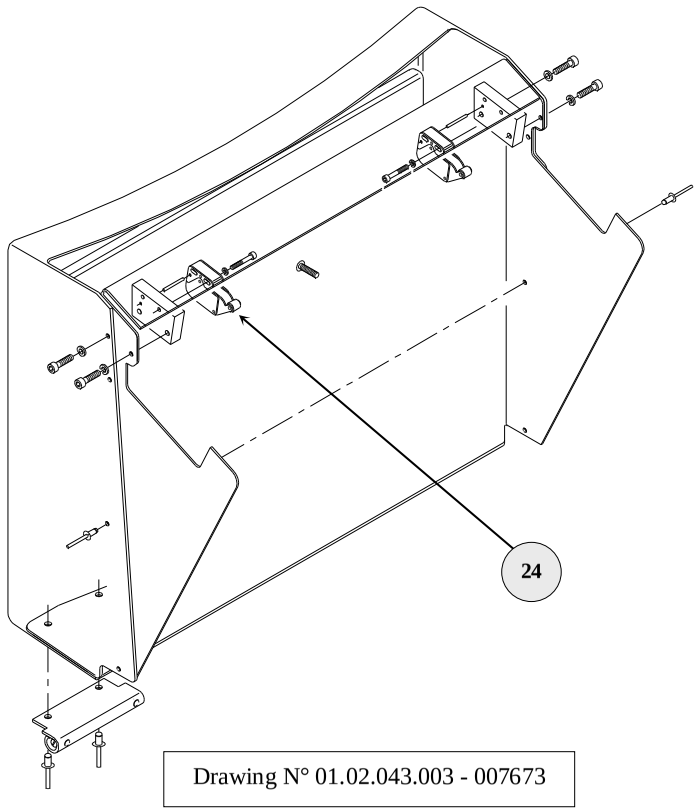

Drawing N° 01.02.043.003 - 007673

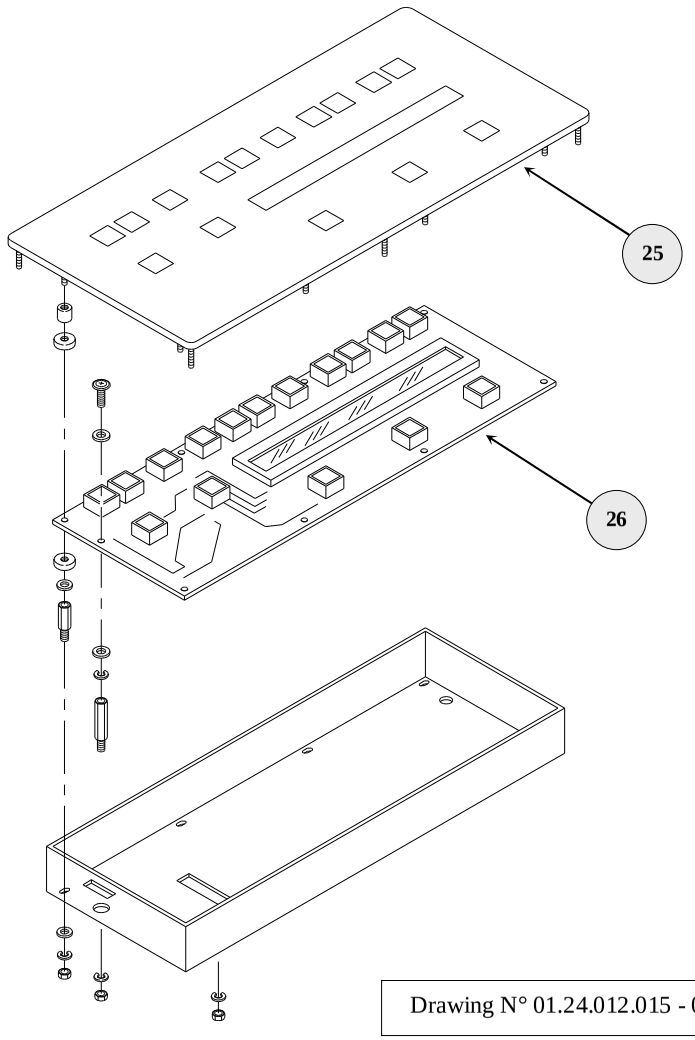

Drawing N° 01.24.012.015 - 003304

N°	DESCRIPTION	CODE	NOTE
CASSETTE HOLDER BASKET		01.02.043.003	
24	Cassette holder pushlock system	49.07.038.001	
KEYBOARD GROUP		01.24.012.015	
25	Control Panel	Depends on the customer	
26	S62/A Serial keyboard card	01.17.037.002	

MECHANICAL EXPLODED VIEW

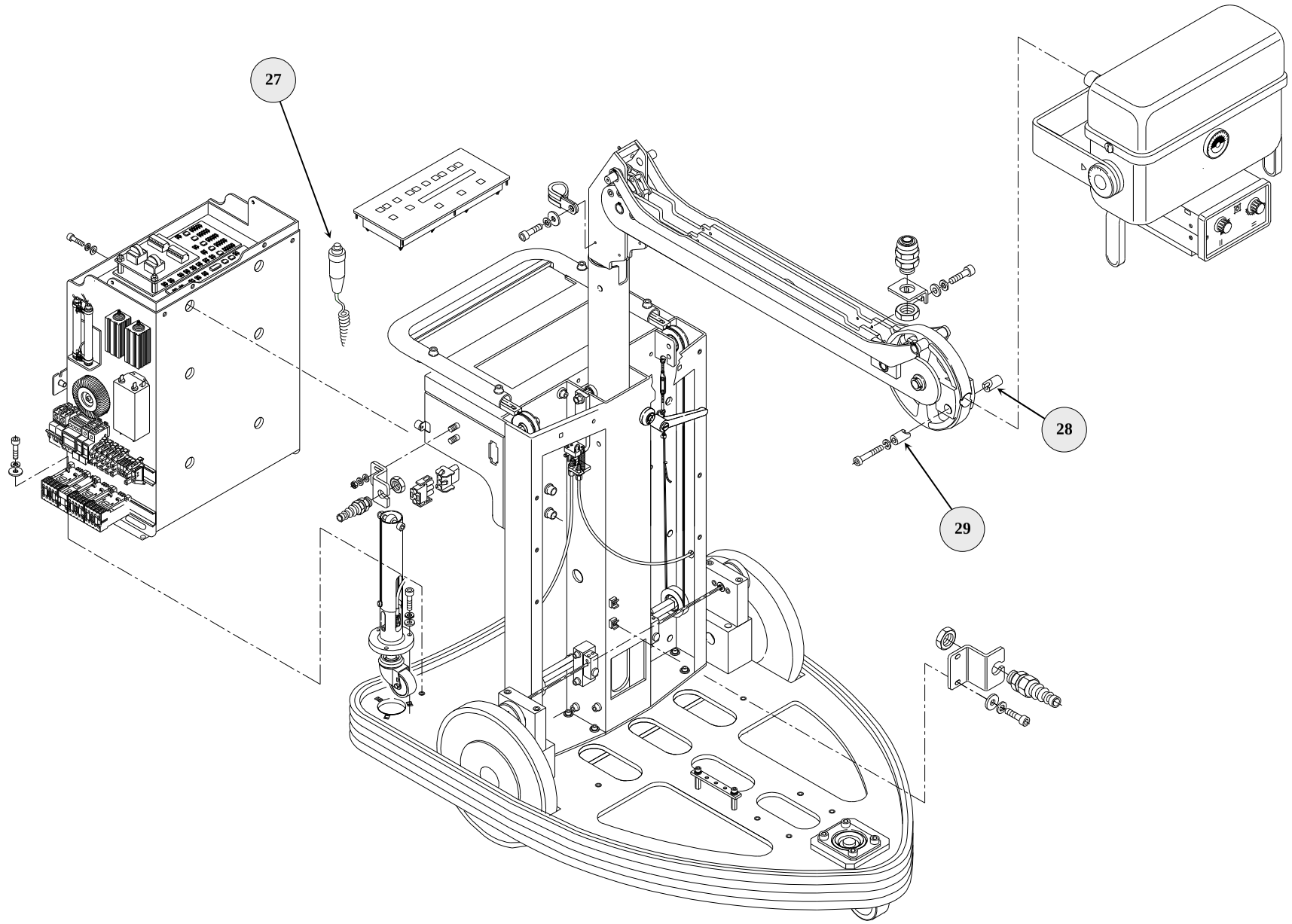

Drawing N° 01.02.043.002 - 007680

N°	DESCRIPTION	CODE	NOTE
MECHANICS/ELECTRONIC GROUP		01.02.043.002	
27	Double-click pushbutton	01.02.010.229	
28	Holdfast with thread	01.02.001.170	
29	Holdfast with through hole	01.02.001.169	

MECHANICAL EXPLODED VIEW

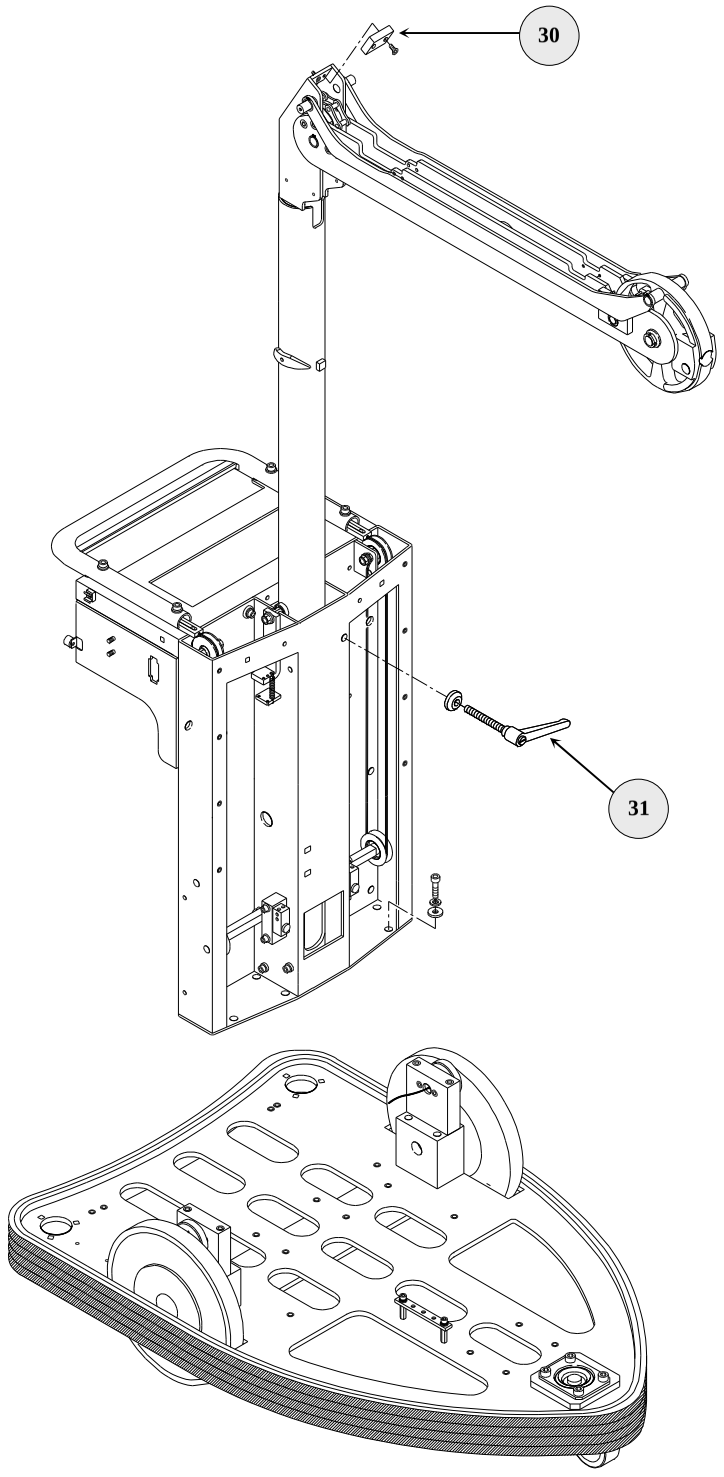

Drawing N° 01.02.043.004 - 007671

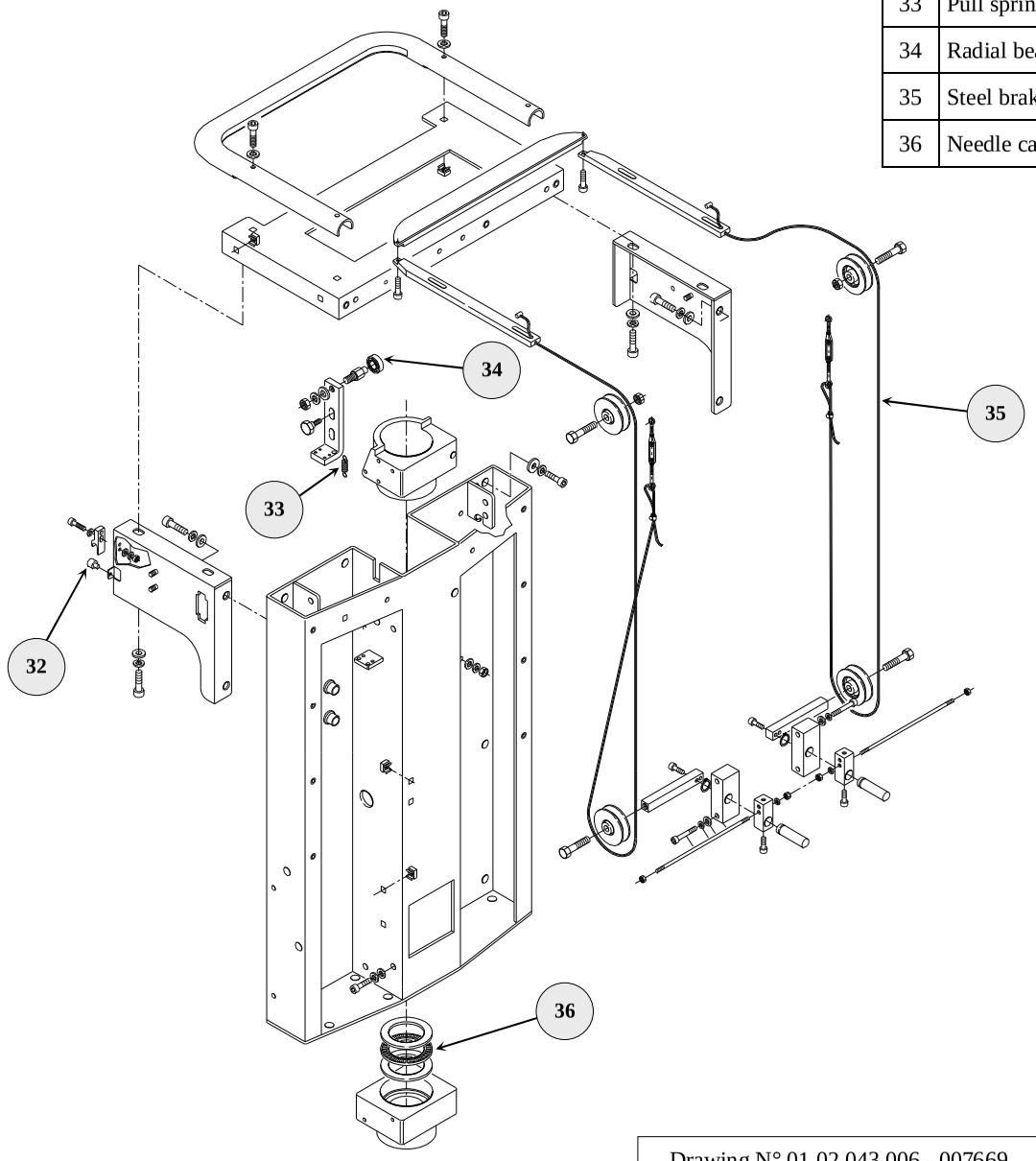

Drawing N° 01.02.043.006 - 007669

N°	DESCRIPTION	CODE	NOTE
BASEMENT/CASING/COLUMN		01.02.043.004	
30	Rubber buffer	01.02.001.111	
31	Column move lock pull knob	49.07.018.005	
CASING GROUP		01.02.043.006	
32	Miniplast foot MP 68-10	49.13.018.001	
33	Pull spring T31620	49.07.021.007	
34	Radial bearing D.8x22x7 608-2Z	49.07.019.005	
35	Steel brakes rope with pawl	49.07.033.001	
36	Needle cage 55x78x3 AXK-5578	49.07.019.006	

MECHANICAL EXPLODED VIEW

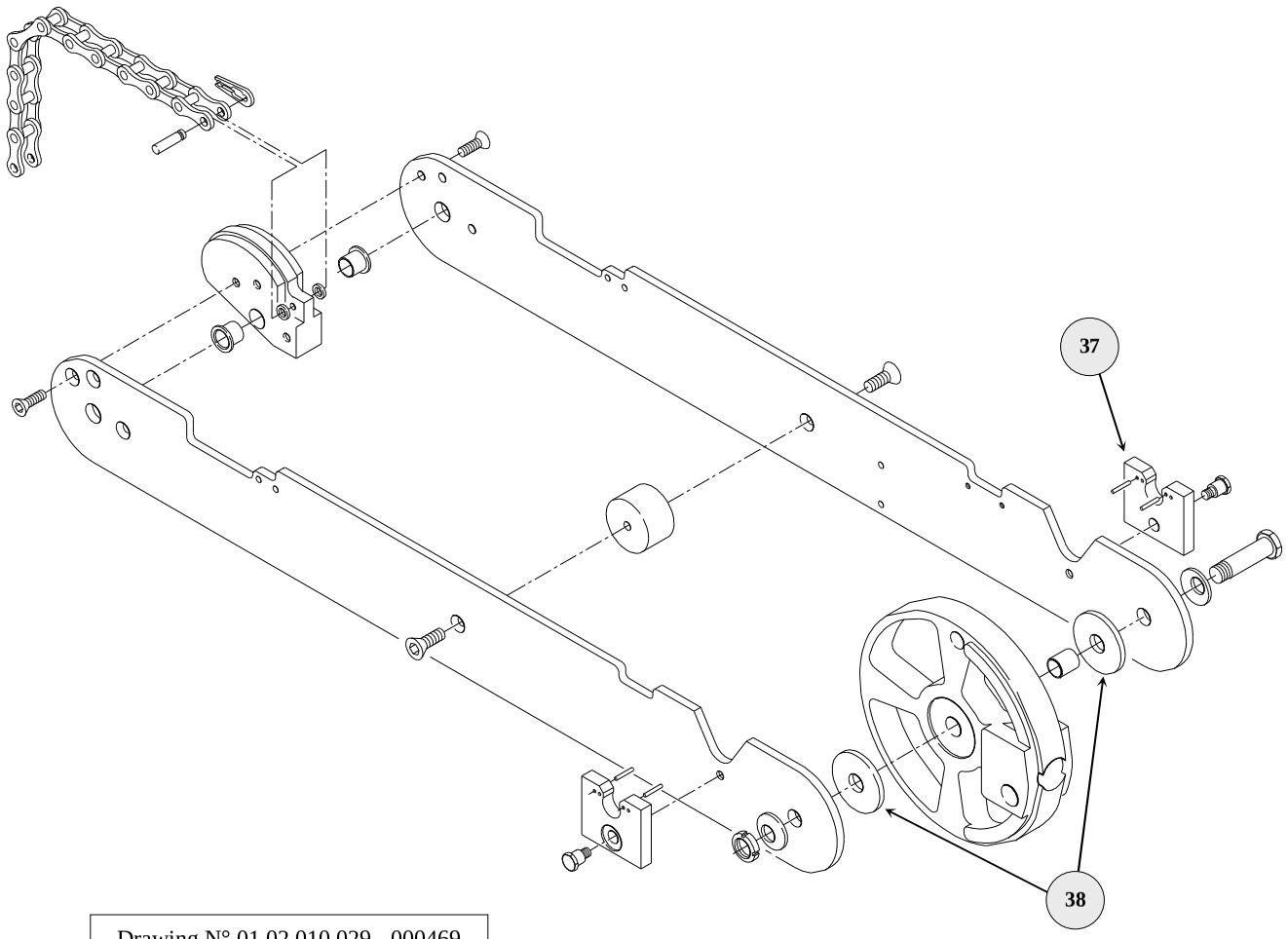

Drawing N° 01.02.010.029 - 000469

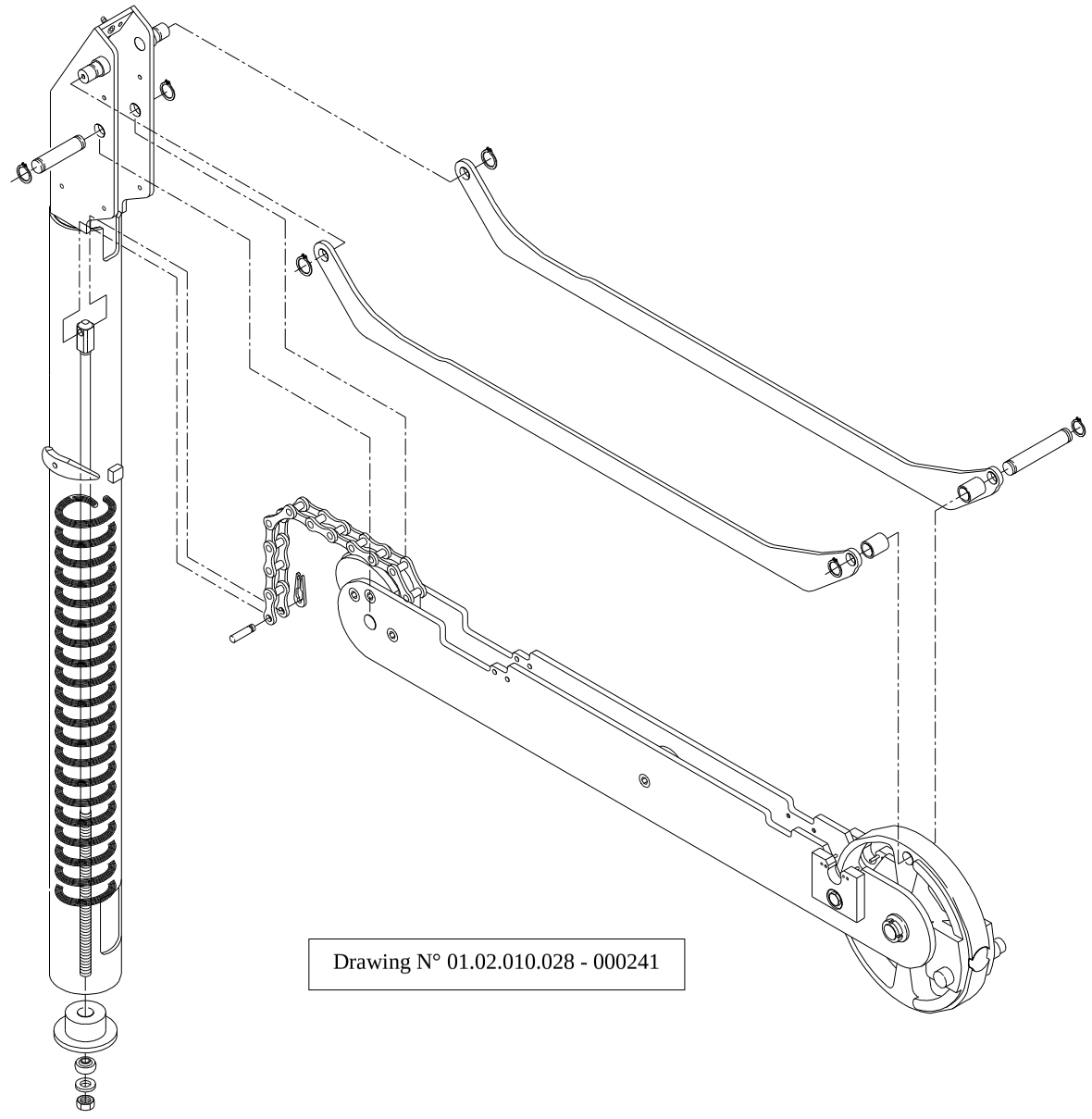

Drawing N° 01.02.010.028 - 000241

N°	DESCRIPTION	CODE	NOTE
ARM GROUP		01.02.010.029	
37	Lock for arm-transport mode	01.02.010.123	
38	Plate brake Ø 55	01.02.001.106	
COLUMN GROUP		01.02.010.028	

MECHANICAL EXPLODED VIEW

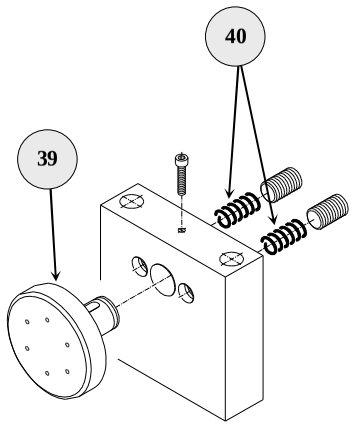

Drawing N° 01.02.010.206 - 000640

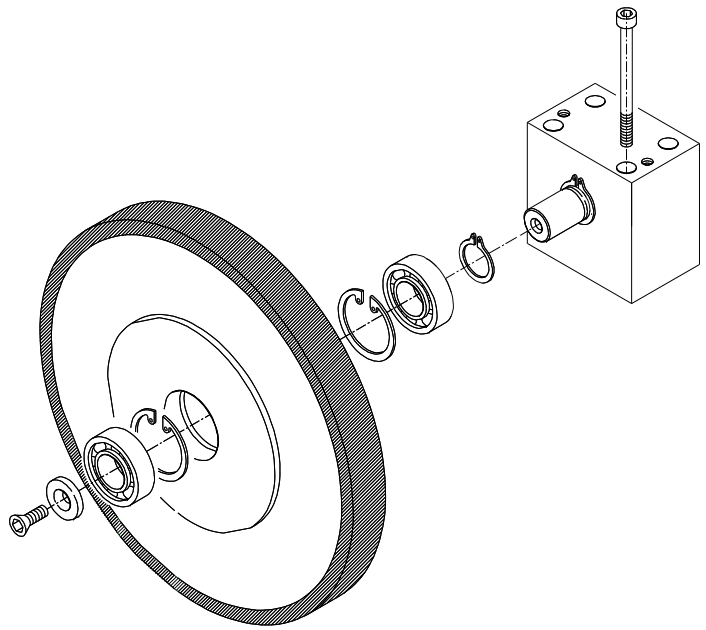

Drawing N° 01.02.006.083 - 000765

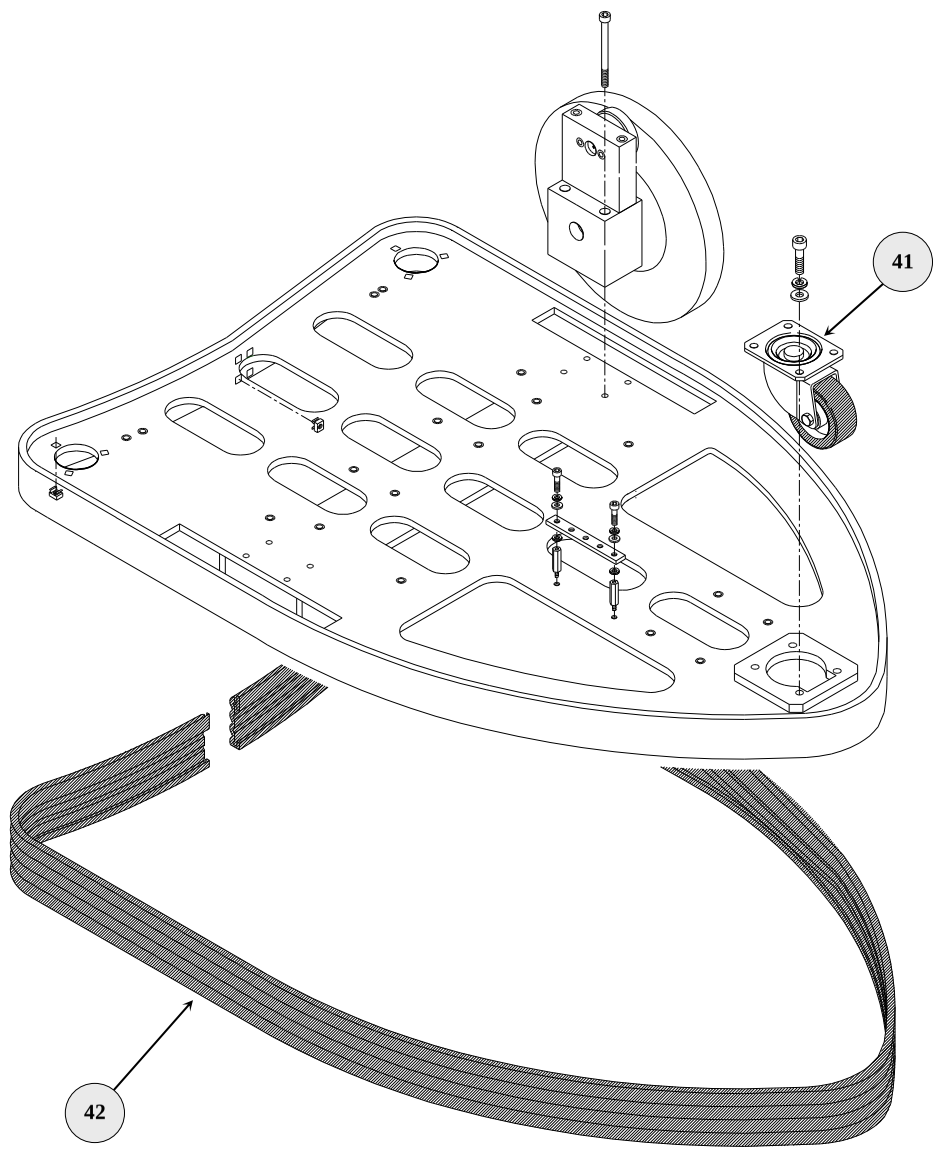

Drawing N° 01.02.043.005 - 007668

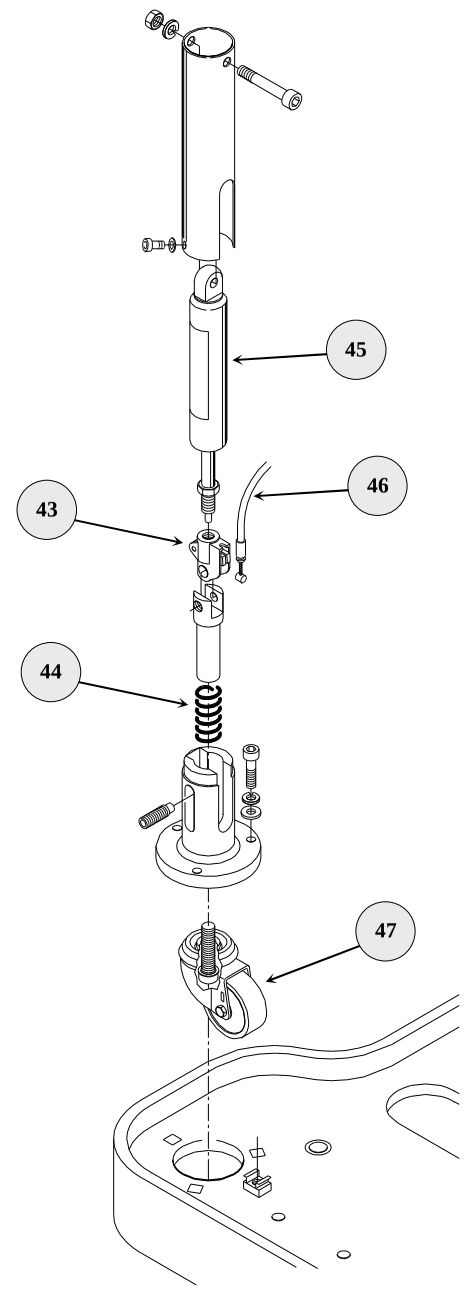

Drawing N° 01.02.006.116 - 000742

N°	DESCRIPTION		CODE	NOTE
SLIDING BLOCK GROUP			01.02.010.206	
39	Pin with sliding block		01.02.010.204	
40	Brake pin spring D12400		49.07.021.004	
BASEMENT/WHEEL GROUP			01.02.043.005	
41	Pivoting wheel 80x30 64-4551		49.07.016.023	
42	Rubber protection	light-blue	01.02.014.007	
		light-green	01.02.025.060	
COMPLETE ANTI-OVERTURN ASSEMBLY			01.02.006.116	
43	Spring head-attachment		49.13.019.002	
44	Compression spring D12550		49.07.021.008	
45	Block spring K0-B1-K-3-030		49.13.019.001	
46	1 mt. cable		49.13.019.003	
47	Pivoting wheel 2470 UOK 050 S70		49.07.016.007	

MECHANICAL EXPLODED VIEW

ELECTRICAL EXPLODED VIEW

Drawing N° 007823

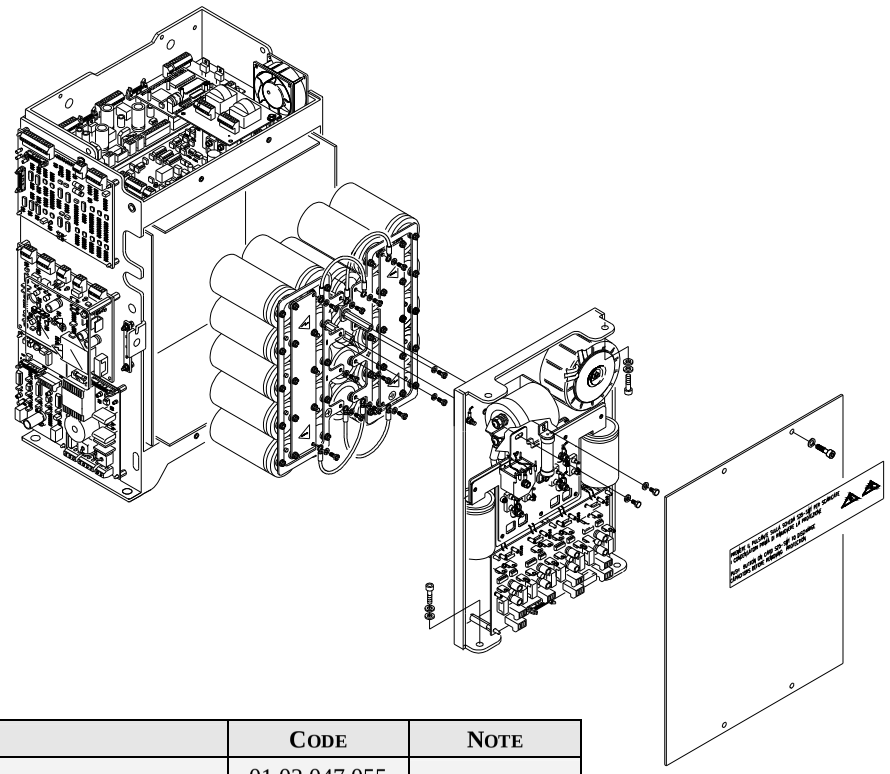

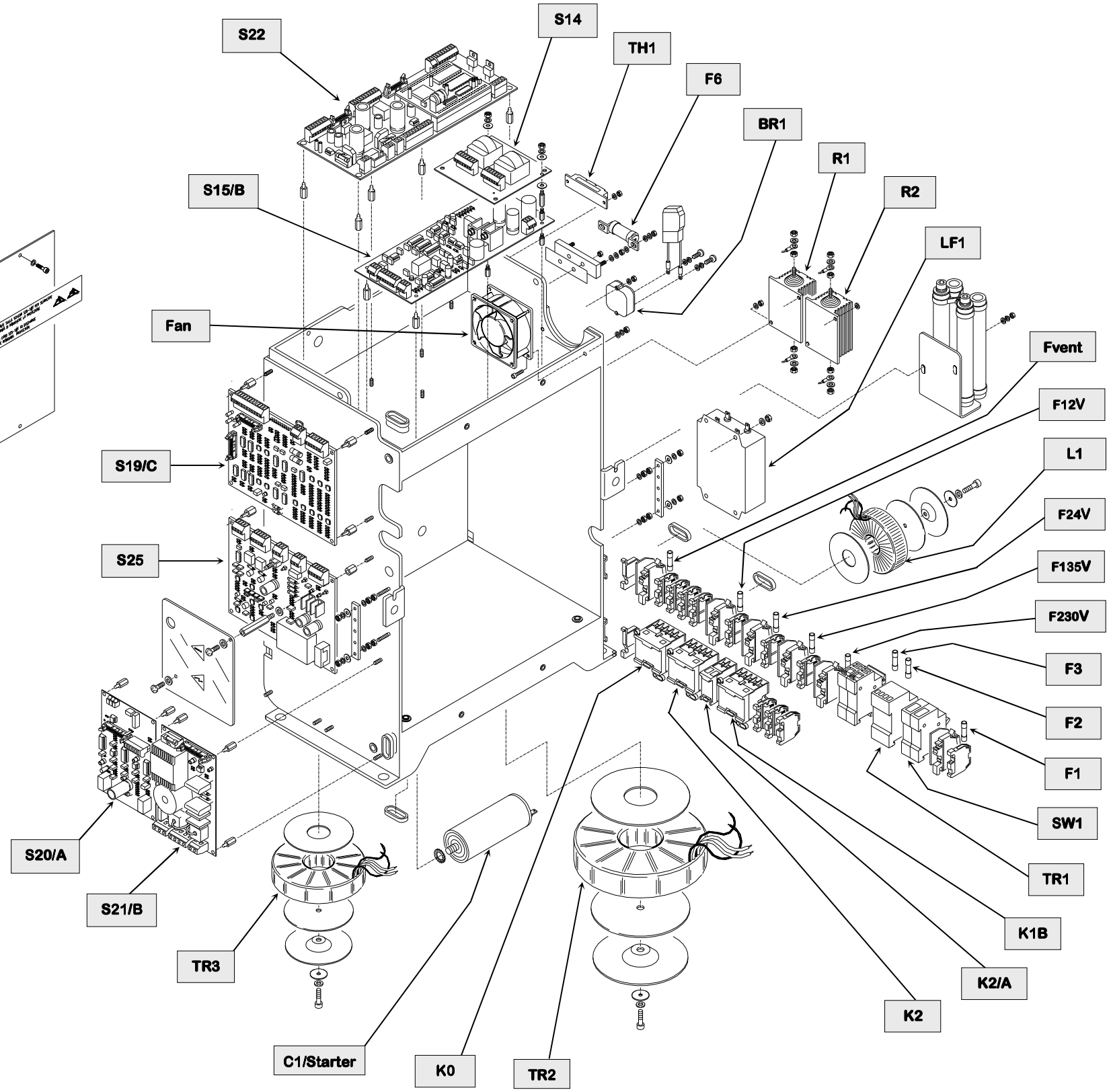

Drawing N° 01.02.047.012 - 007824

N°	DESCRIPTION	CODE	NOTE
ELECTRONICS GROUP		01.02.047.055	
BR1	Graetz bridge Semikron SKB 30/16A1	49.06.018.015	
C1/Starter	30 µF 450 Vdc Power capacitor	49.06.012.035	
FAN	Fan 80x80x25 230Vac 50Hz	49.06.023.008	
F1- Fvent	Fuse 5x20 200mA 250V	49.06.022.025	
F2-F3	Fuse 10x38 16A 500V GL	49.06.022.003	
F6	Fuse Brush 63FE (63A 660V)	49.06.022.001	
F12V	Fuse 5x20 10A 250V	49.06.022.022	
F24V-F230V	Fuse 5x20 2A 250V	46.06.022.013	
F135V	Fuse 5x20 1A 250V	49.06.022.011	
K1B-K2-K0	BC6-30-01 24Vdc 4kW Contactor	49.06.015.017	
K2/A	CA6-11M Auxiliary contactor	49.06.015.021	
L1	2,5 mm^2 Filter inductor	01.02.010.195	
LF1	EPCOS B84112-B-B120 Filter	49.06.030.006	
R1-R2	ATE RB 106 25E Resister	49.06.011.080	
S14	S14 Filter board	01.17.005.005	
S15/B	S15/B Filament board	01.17.001.029	
S19/C	S19/C Inverter board	01.17.008.040	
S20/A	S20/A Starter board	01.17.006.003	
S21/B	S21/B Rotation board	01.17.003.006	
S22	S22 Micro board	01.17.010.004	
S25	S25 Capacitors bank loading board	01.17.005.009	
SW1	Int. Aut. Multi 9 C60N C16A 2P	49.05.008.002	
TH1	Powerblock TT61 N 12 KOF	49.06.021.013	
TR1	TM 15/24 Module transformer	01.05.001.017	
TR2	300VA Tor. transformer	01.05.001.026	
TR3	230-250/330 600VA Tor. transformer	01.05.001.016	

ELECTRICAL EXPLODED VIEW

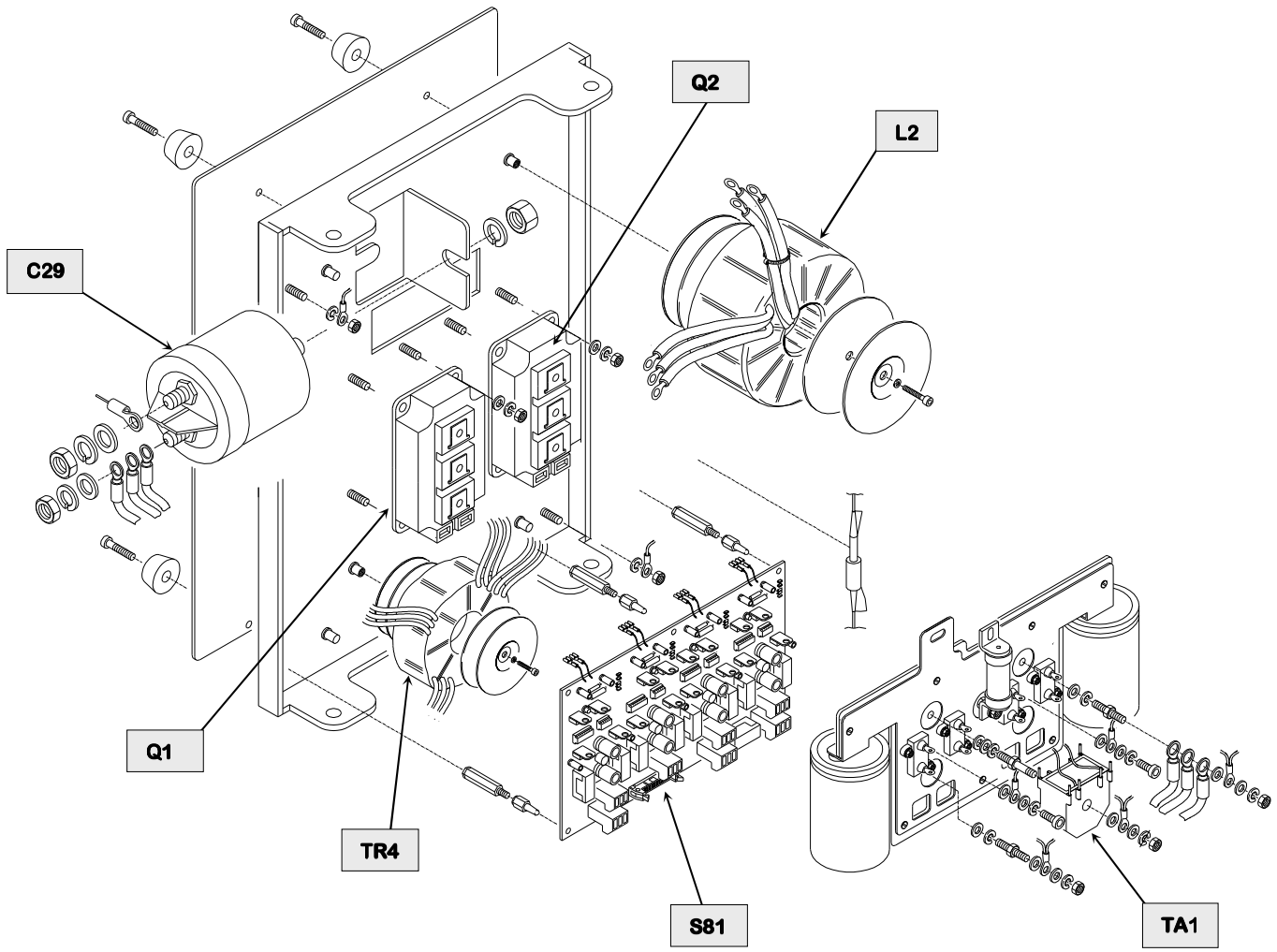

Drawing N° 01.02.047.015 - 007830

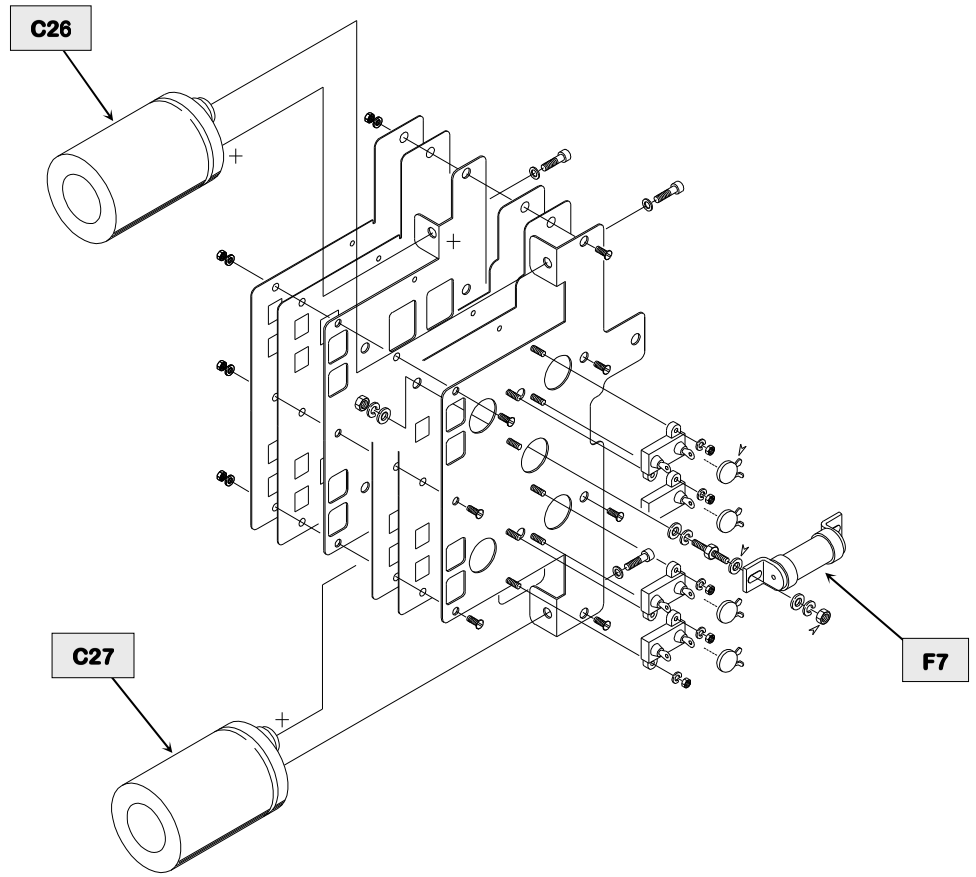

Drawing N° 01.02.025.018 - 003302

N°	DESCRIPTION	CODE	NOTE
C26-C27	1500 µF 400Vdc Elect. capacitor	49.06.012.079	
C29	(80A) 2 µF 1700 Vdc mkV capacitor	49.06.012.078	
F7	Fuse Brush 100 FE (100A 660V)	49.06.022.010	
L2	5,1 µH 45112 Tor. inductor	01.05.003.006	
Q1-Q2	Tr. IGBT Siemens BSM 300GB 120 DLC	49.06.017.025	
S81	S81 Driver board	01.17.081.001	
TR4	100kHz Driver tor. transformer	01.05.001.018	
TA1	ENCO 10701 1/500 Amper transformer	01.05.004.002	

ELECTRICAL EXPLODED VIEW

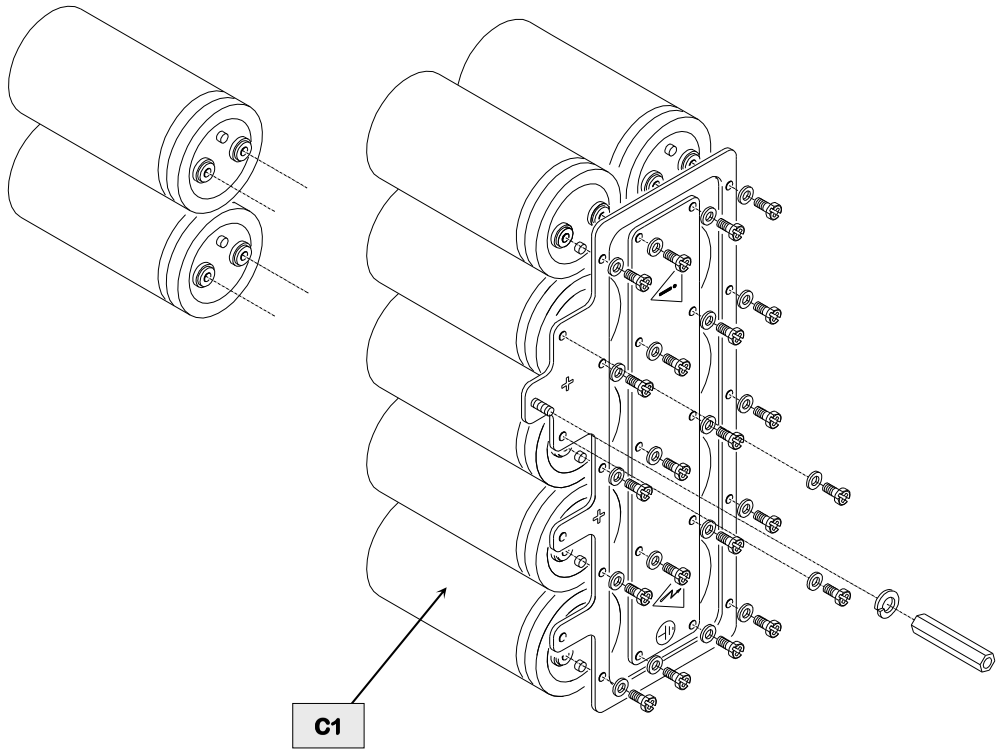

Drawing N° 01.02.047.016 - 007831

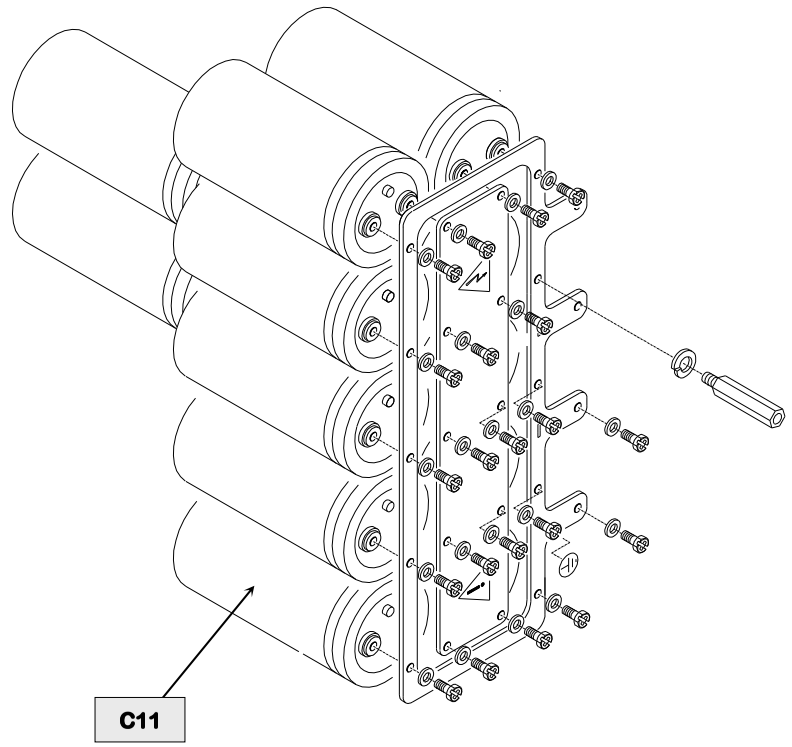

Drawing N° 01.02.047.017 - 007832

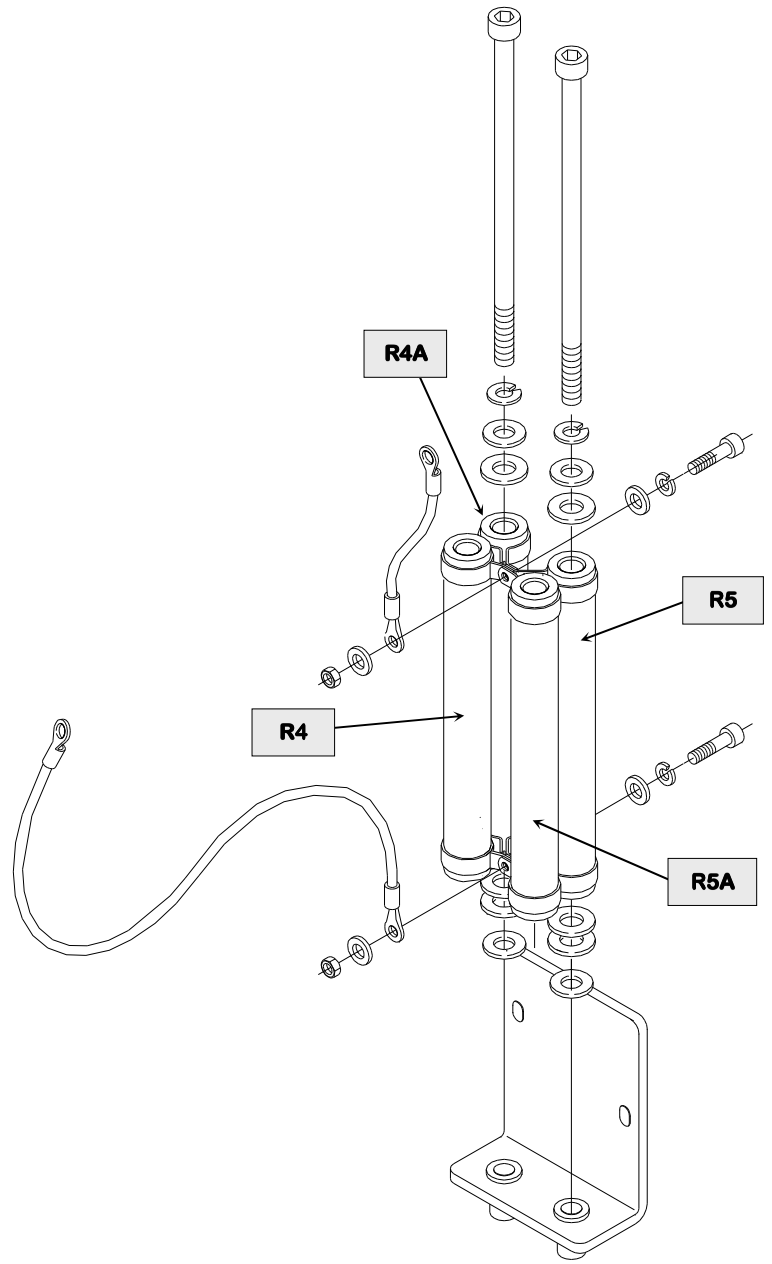

Drawing N° 01.02.025.027 - 003259

N°	DESCRIPTION	CODE	NOTE
C1÷C20B	V 16000 µF 350Vdc Itelcond Elect. capacitor	49.06.012.076	
R4-R4A-R5-R5A	IRE RCC 47 Ω Resister	49.06.011.088	

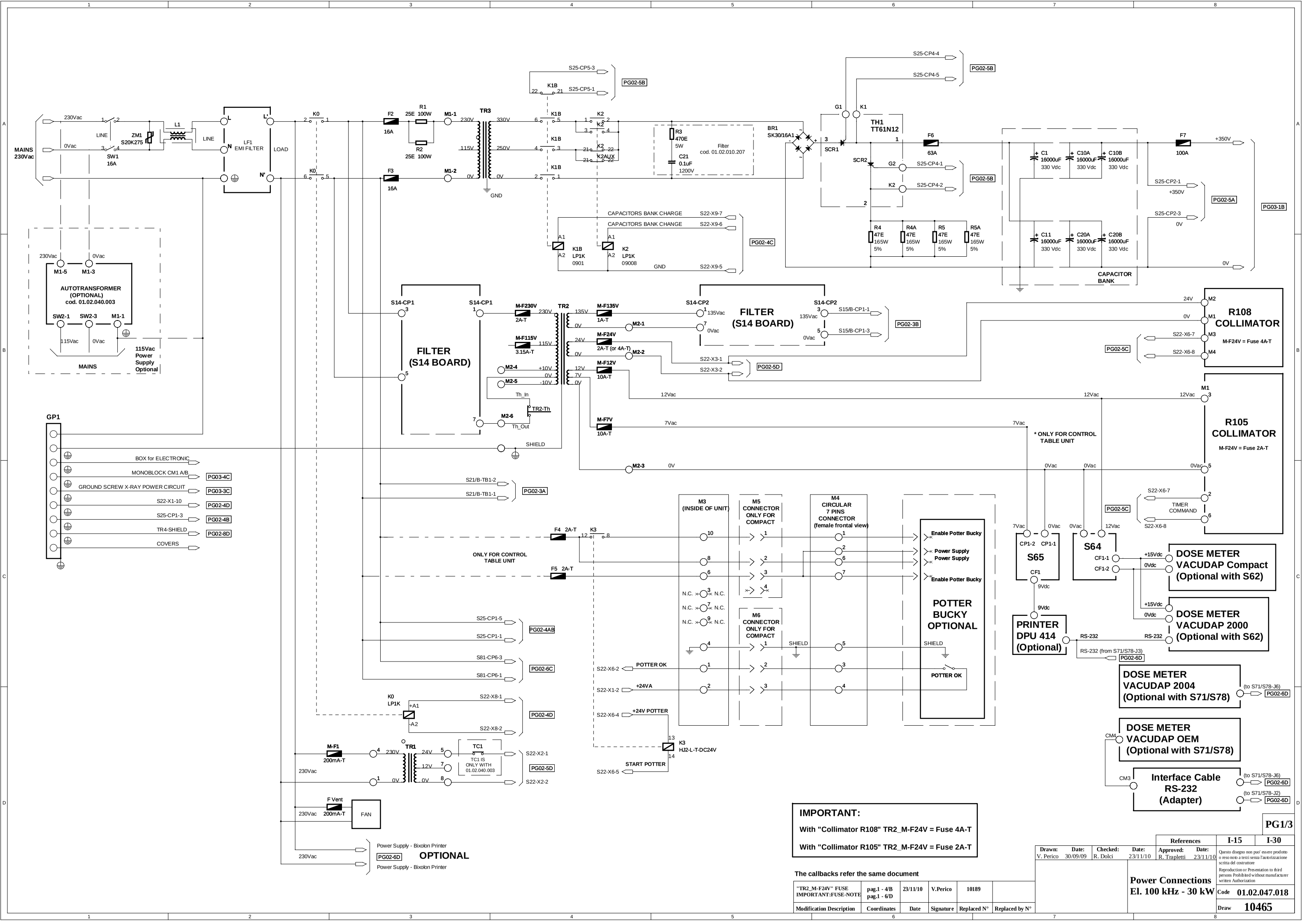

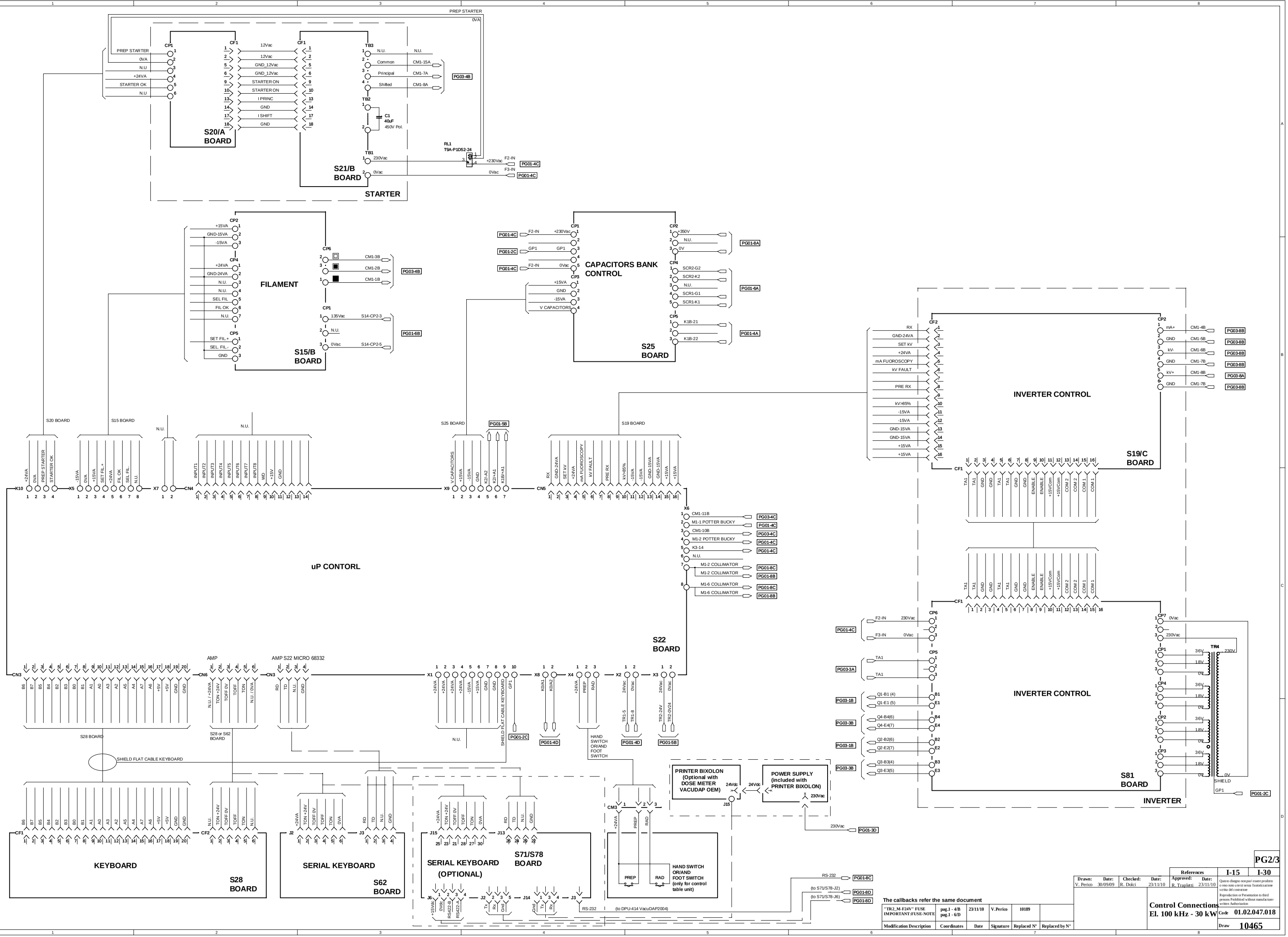
PREP STARTER
0VA
S20/A BOARD
S21/B BOARD
STARTER
RL1
T9A-P1D52-24
PG03-4B
PG01-4C
PG01-2C
PG01-4D
PG01-5B
PG01-6B
PG01-8A
PG01-6A
PG01-4A
PG03-4C
PG01-8C
PG01-8B
PG03-3A
PG03-1B
PG03-3B
PG03-3D
PG03-8B
PG03-6A
FILAMENT
S15/B BOARD
CAPACITORS BANK CONTROL
S25 BOARD
INVERTER CONTROL
S19/C BOARD
S20 BOARD
S15 BOARD
S25 BOARD
S19 BOARD
uP CONTORL
S22 BOARD
AMP
AMP S22 MICRO 68332
S28 BOARD
S28 or S62 BOARD
SHIELD FLAT CABLE KEYBOARD
HAND SWITCH OR/AND FOOT SWITCH
PRINTER BIXOLON (Optional with DOSE METER VACUDAP OEM)
POWER SUPPLY (included with PRINTER BIXOLON)
S81 BOARD
INVERTER
KEYBOARD
S28 BOARD
SERIAL KEYBOARD
S62 BOARD
SERIAL KEYBOARD (OPTIONAL)
S71/S78 BOARD
HAND SWITCH OR/AND FOOT SWITCH (only for control table unit)
(to DPU-414 VacuDAP2004)
(to S71/S78-J2)
(to S71/S78-J6)
The callbacks refer the same document
"TR2_M-F24V" FUSE IMPORTANT!FUSE-NOTE
pag.1 - 4/B
pag.1 - 6/D
23/11/10
V.Perico
10189
Modification Description
Coordinates
Date
Signature
Replaced N°
Replaced by N°
Drawn: V. Perico 30/09/09
Checked: R. Dolci 23/11/10
Approved: R. Trapletti 23/11/10
Control Connections
El. 100 kHz - 30 kW
Code 01.02.047.018
Draw 10465
PG2/3
References I-15 I-30
Questo disegno non puo' essere prodotto o reso noto a terzi senza l'autorizzazione scritta del costruttore
Reproduction or Presentation to third persons Prohibited without manufacturer written Authorization

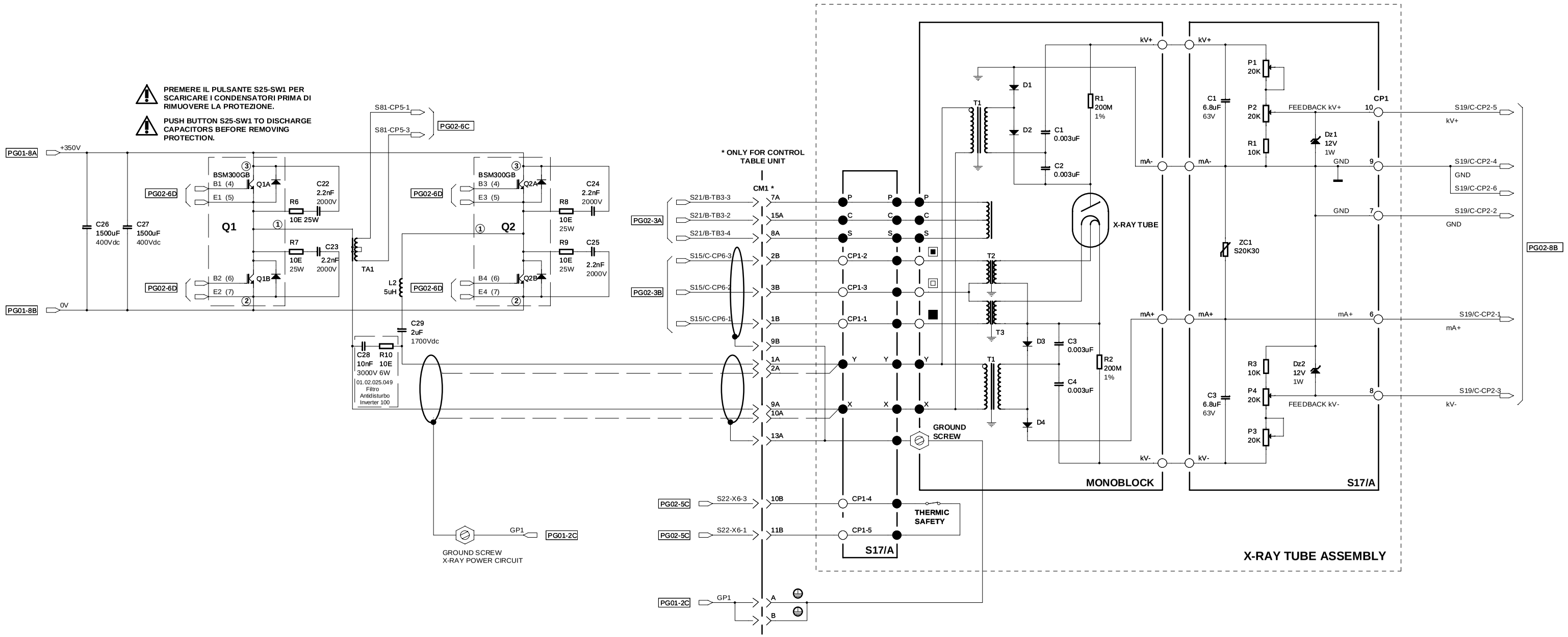

PG3/3

References		I-15	I-30
Drawn: V. Perico	Date: 30/09/09	Checked: R. Dolci	Date: 23/11/10
Approved: R. Trapletti	Date: 23/11/10		

The callbacks refer the same document

Modification Description	Coordinates	Date	Signature	Replaced N°	Replaced by N°
"TR2_M-F24V" FUSE IMPORTANT:FUSE-NOTE	pag.1 - 4/B pag.1 - 6/D	23/11/10	V.Perico	10189	

X-Ray Power Circuit El. 100 kHz - 30 kW

Code **01.02.047.018**

Draw **10465**

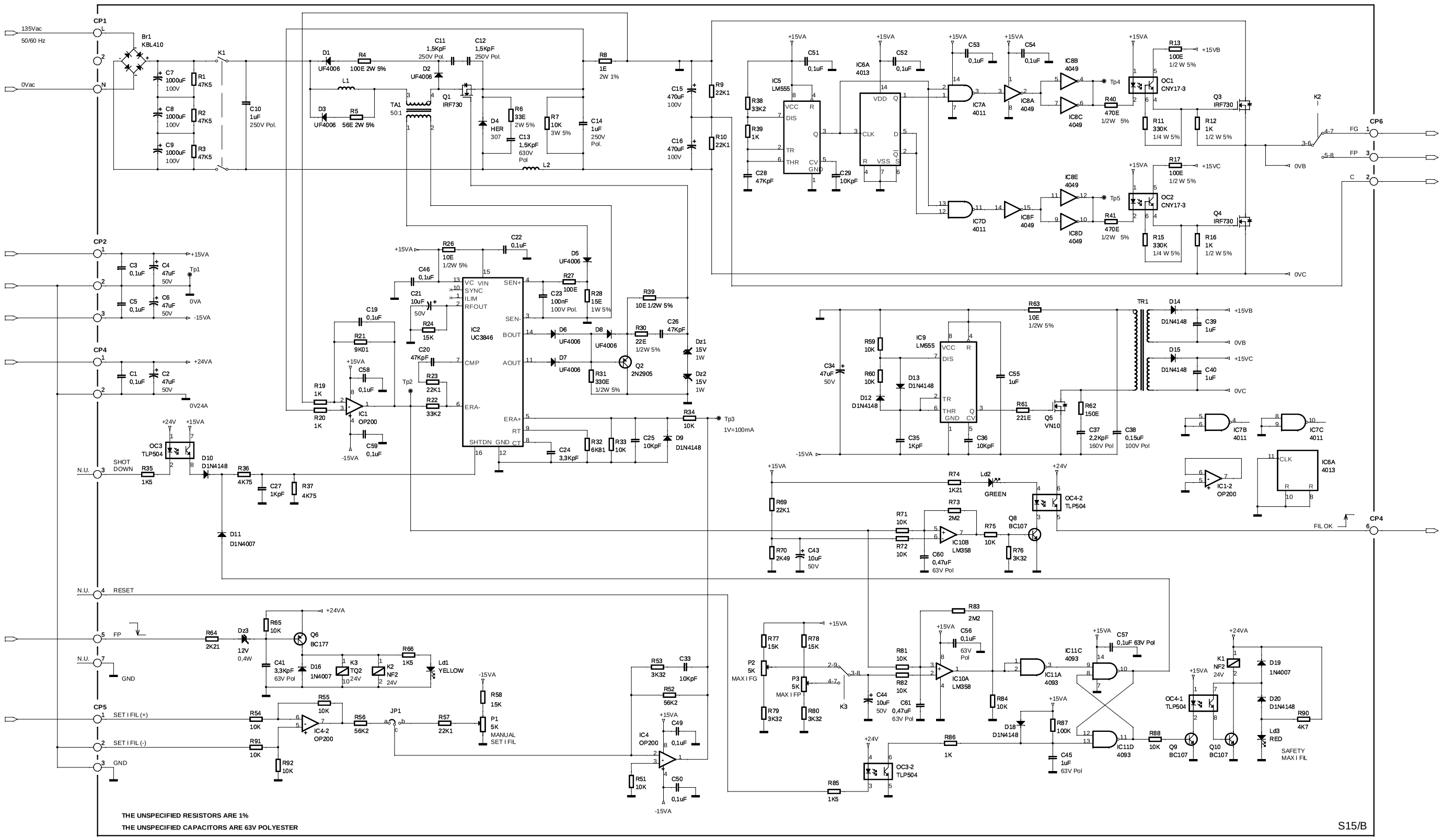

PG1/1

Drawn:	Date:	Checked:	Date:	Approved:	Date:
V. Perico	13-05-09	Ing Dolci	13-05-09	R. Trapletti	13-05-09

References

S15/B
Filament Supply

Code **01.17.001.029**

Draw **9678**

Modification Description	Coordinates	Date	Signature	Replaced N°	Replaced by N°

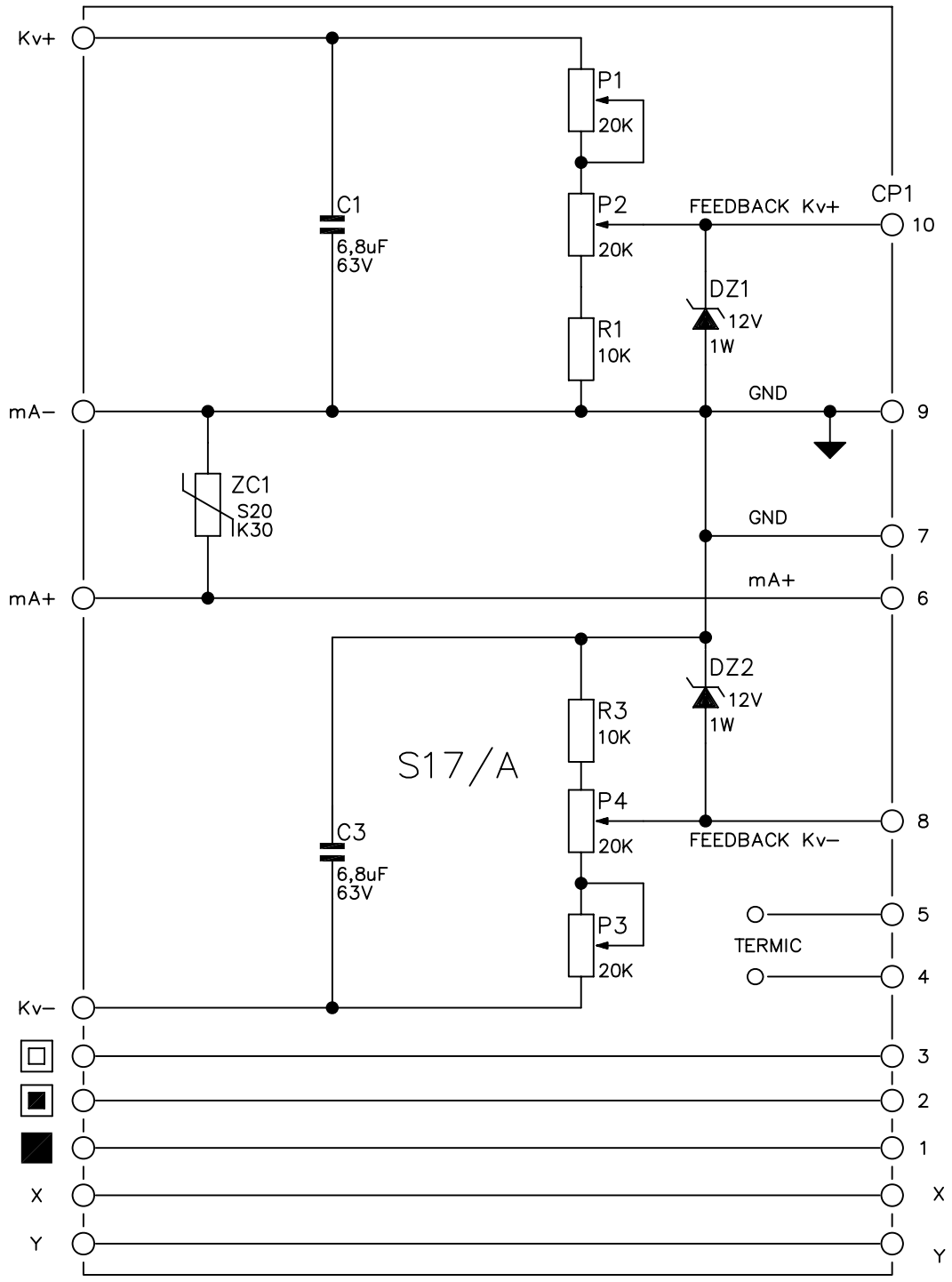

Drawn	Checked	Approved	Weight (kg)	Scale
V. Perico	R. Sala	/	/	/
DATE 30-01-2004	DATE 30-01-2004	DATE /	Code Art. 01.17.008.025	

UNI | CEI | IEC

PREVIOUS CODE /

NEXT CODE /

Monoblocco
Scheda S17/A
Monoblock
S17/A Board

Needed quantities for drawn groups

CARTOUCHE A3-E

Doc. N° DOC. 7548

Foglio N° Sheet 1/1

MODIFICATION DESCRIPTION	Coordinates	Date	Signature	Replaced Draw N°	Replaced by Draw N°
Eliminato rinvii e ridotto dimensioni		30-01-04		5684	

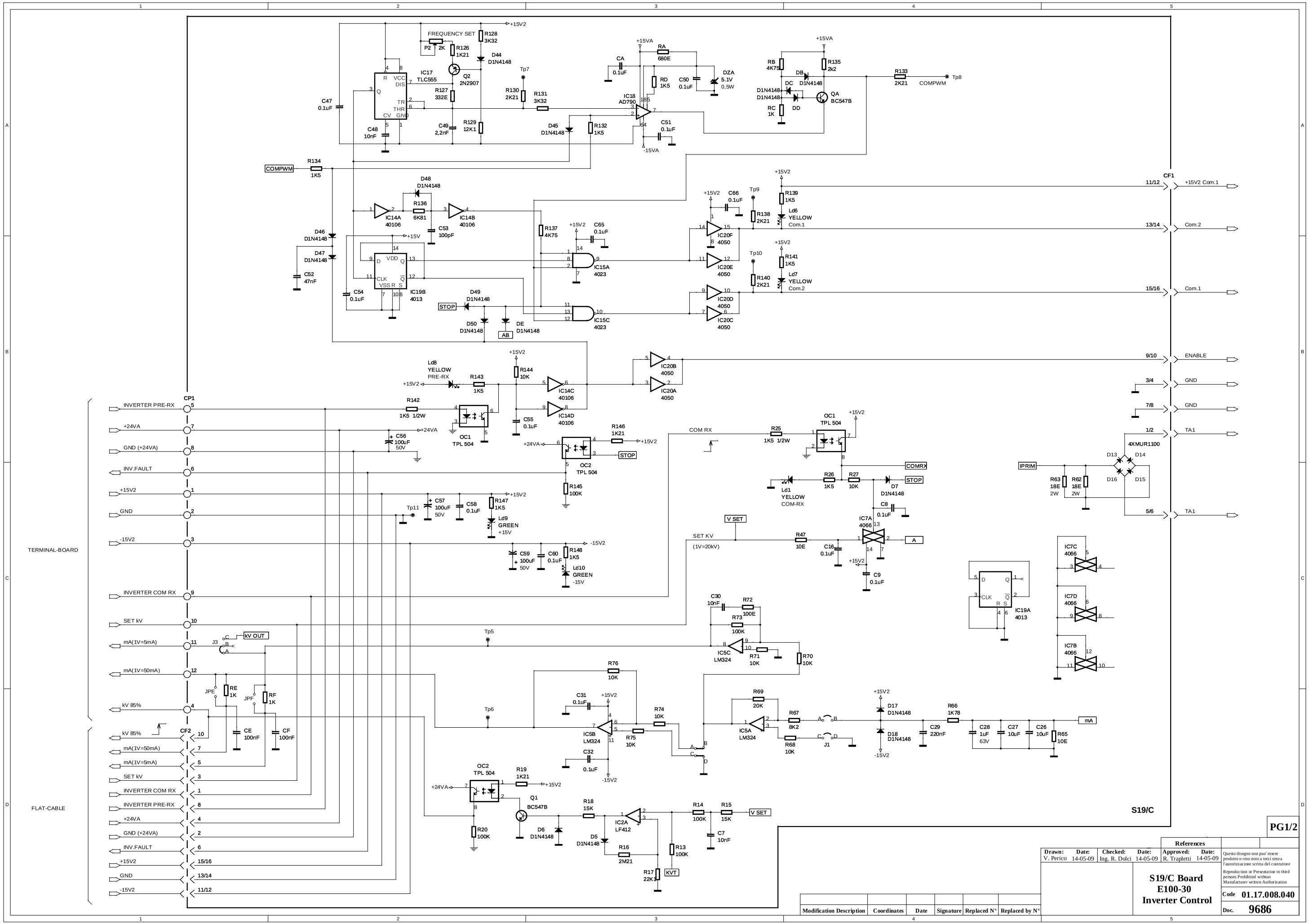
FREQUENCY SET
P2 2K
R126 1K21
R128 3K32
D44 D1N4148
IC17 TLC555
Q2 2N2907
R127 332E
C47 0.1uF
C48 10nF
C49 2,2nF
R129 12K1
R130 2K21
R131 3K32
Tp7
D45 D1N4148
R132 1K5
IC18 AD790
CA 0.1uF
RA 680E
RD 1K5
C50 0.1uF
DZA 5.1V 0,5W
C51 0.1uF
RB 4K75
RC 1K
DB D1N4148
DC D1N4148
DD
QA BC547B
R135 2k2
R133 2K21
COMPWM
Tp8
R134 1K5
D48 D1N4148
IC14A 40106
R136 6K81
IC14B 40106
C53 100pF
D46 D1N4148
D47 D1N4148
C52 47nF
C54 0.1uF
IC19B 4013
R137 4K75
C65 0.1uF
IC15A 4023
D49 D1N4148
STOP
D50 D1N4148
DE D1N4148
AB
IC15C 4023
C66 0.1uF
Tp9
R138 2K21
R139 1K5
Ld6 YELLOW Com.1
IC20F 4050
IC20E 4050
Tp10
R140 2K21
R141 1K5
Ld7 YELLOW Com.2
IC20D 4050
IC20C 4050
CF1
11/12 +15V2 Com.1
13/14 Com.2
15/16 Com.1
9/10 ENABLE
3/4 GND
7/8 GND
1/2 TA1
5/6 TA1
Ld8 YELLOW PRE-RX
R143 1K5
R144 10K
IC14C 40106
IC14D 40106
IC20B 4050
IC20A 4050
C55 0.1uF
CP1
INVERTER PRE-RX
+24VA
GND (+24VA)
INV.FAULT
+15V2
GND
-15V2
R142 1K5 1/2W
OC1 TPL 504
C56 100uF 50V
R146 1K21
OC2 TPL 504
R145 100K
COM RX
R25 1K5 1/2W
OC1 TPL 504
COMRX
R26 1K5
R27 10K
STOP
D7 D1N4148
Ld1 YELLOW COM-RX
C8 0.1uF
C57 100uF 50V
C58 0.1uF
R147 1K5
Ld9 GREEN +15V
Tp11
C59 100uF 50V
C60 0.1uF
R148 1K5
Ld10 GREEN -15V
V SET
SET KV
(1V=20kV)
R47 10E
C16 0.1uF
IC7A 4066
A
C9 0.1uF
IPRIM
R63 18E 2W
R62 18E 2W
D13 D14 D15 D16
4XMUR1100
IC7C 4066
IC7D 4066
IC7B 4066
IC19A 4013
TERMINAL-BOARD
INVERTER COM RX
SET kV
mA(1V=5mA)
mA(1V=50mA)
kV 85%
kV OUT
J3
C30 10nF
R72 100E
R73 100K
IC5C LM324
R71 10K
R70 10K
Tp5
R76 10K
C31 0.1uF
IC5B LM324
R75 10K
R74 10K
C32 0.1uF
Tp6
JPE
RE 1K
JPF
RF 1K
CE 100nF
CF 100nF
CF2
FLAT-CABLE
R69 20K
R67 8K2
R68 10K
IC5A LM324
J1
D17 D1N4148
D18 D1N4148
R66 1K78
C29 220nF
C28 1uF 63V
C27 10uF
C26 10uF
R65 10E
mA
OC2 TPL 504
R19 1K21
Q1 BC547B
R20 100K
R18 15K
D6 D1N4148
D5 D1N4148
IC2A LF412
R16 2M21
R17 22K1
KVT
R13 100K
R14 100K
R15 15K
C7 10nF
S19/C
PG1/2
Drawn: V. Perico Date: 14-05-09
Checked: Ing. R. Dolci Date: 14-05-09
Approved: R. Trapletti Date: 14-05-09
References
Modification Description
Coordinates
Date
Signature
Replaced N°
Replaced by N°
S19/C Board
E100-30
Inverter Control
Code 01.17.008.040
Doc. 9686
Questo disegno non puo' essere prodotto o reso noto a terzi senza l'autorizzazione scritta del costruttore
Reproduction or Presentation to third persons Prohibited without Manufacturer written Authorization

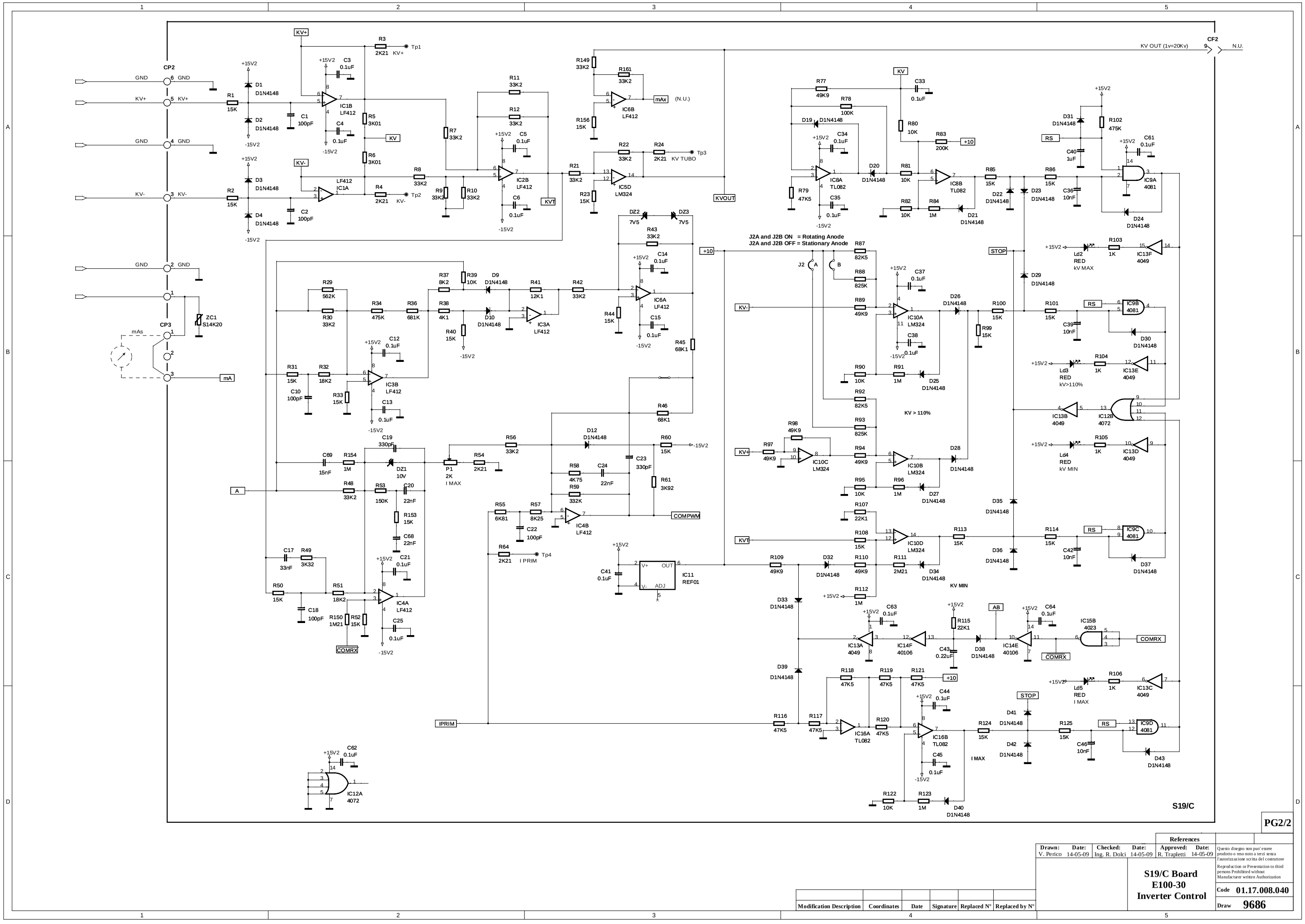

PG2/2

Drawn:	Date:	Checked:	Date:	Approved:	Date:
V. Perico	14-05-09	Ing. R. Dolci	14-05-09	R. Trapletti	14-05-09

References

S19/C Board
E100-30
Inverter Control

Questo disegno non puo' essere prodotto o reso noto a terzi senza l'autorizzazione scritta del costruttore

Reproduction or Presentation to third persons Prohibited without Manufacturer written Authorization

Code **01.17.008.040**

Draw **9686**

Modification Description	Coordinates	Date	Signature	Replaced N°	Replaced by N°

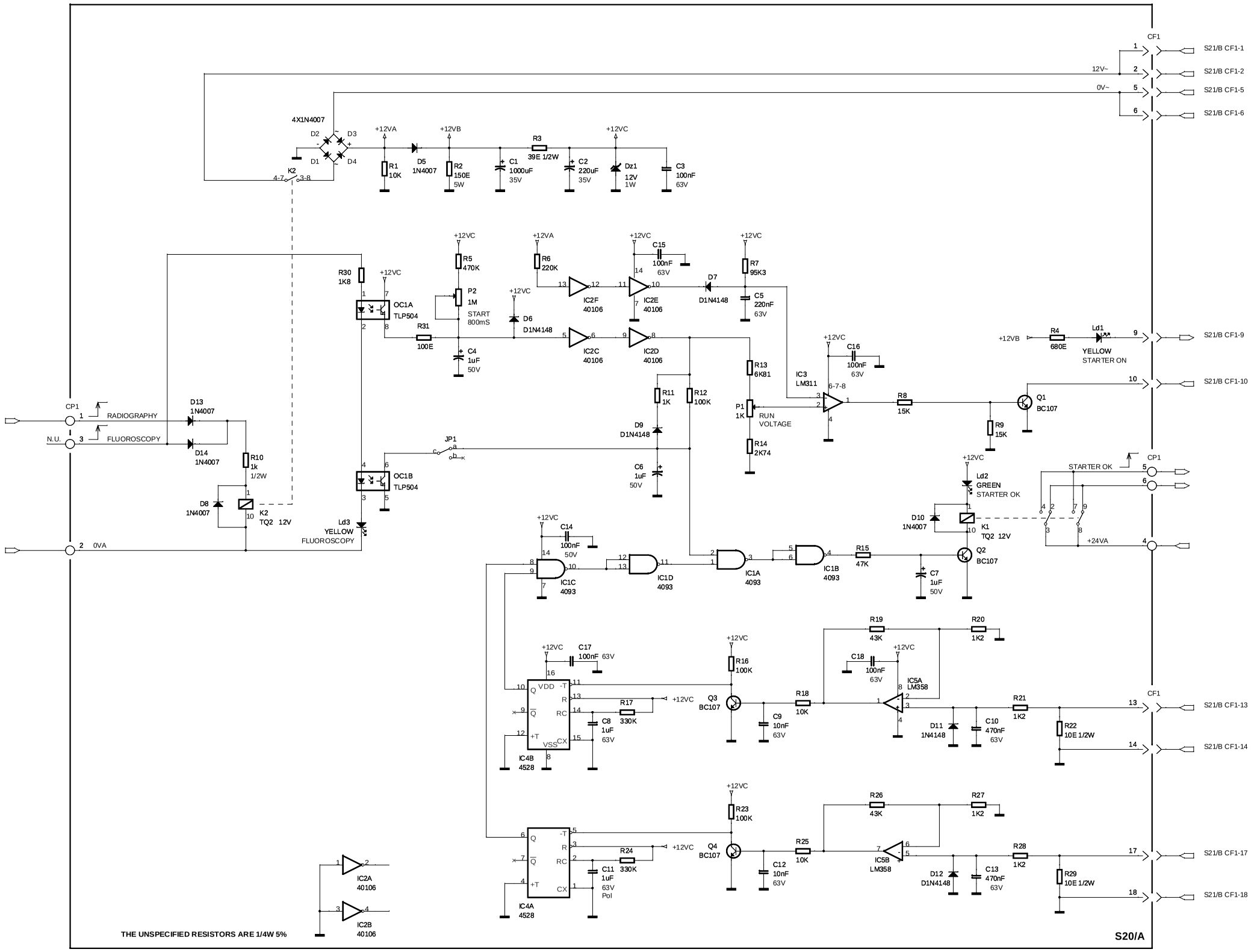

PG1 / 1

	Drawn:	Date:	Checked:	Date:	Approved:	Date:
References	V. Perico	13-05-09	Ing. Dolci	13-05-09	R. Trapletti	13-05-09

S20/A
X-Ray Tube Stator Supply

Code 01.17.006.003
Draw 9674

Modification Description	Coordinates	Date	Signature	Replaced N°	Replaced by N°

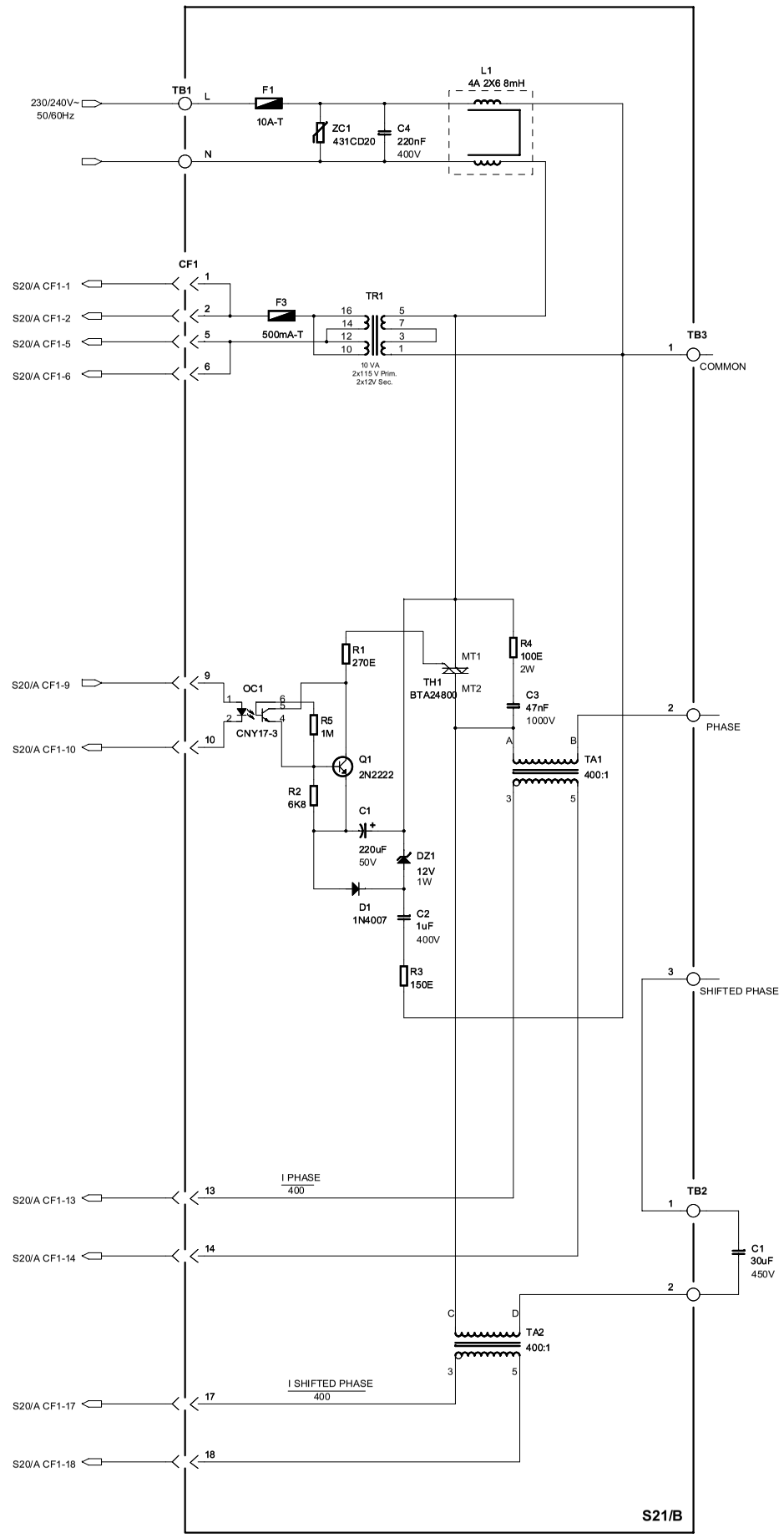

PG1 / 1

Drawn:	Date:	Checked:	Date:	Approved:	Date:
V. Perico	13-05-09	Ing.Dolci	27-01-10	R. Trapletti	27-01-10

References

S21/B
X-Ray Tube Stator Supply

Code **01.17.003.006**
Draw **10192**

Modification Description	Coordinates	Date	Signature	Replaced N°	Replaced by N°
TH1 changed	4B	27-01-10	V. Perico	9675	

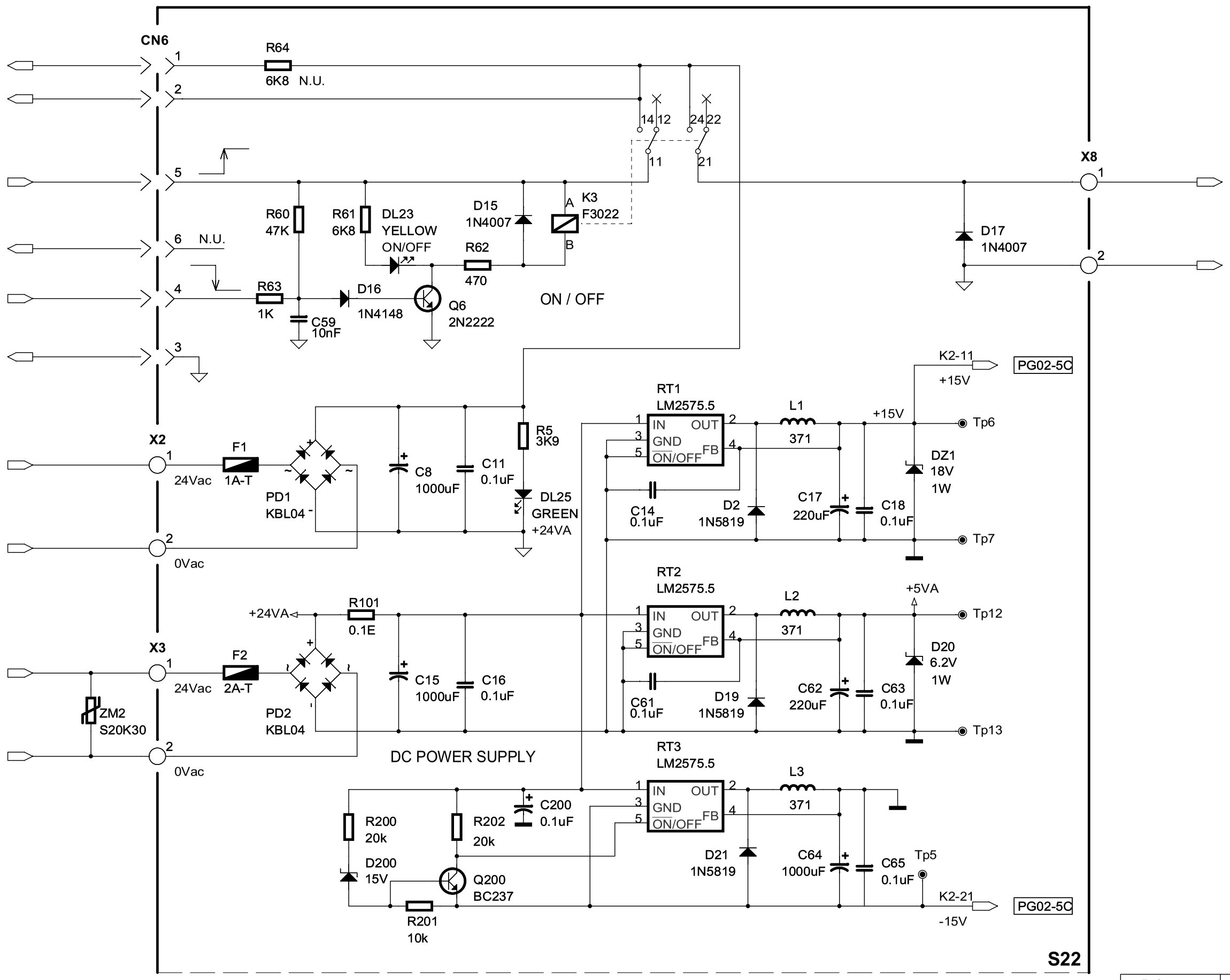

PG1/5

Drawn:	Date:	Checked:	Date:	References Approved:	Date:
V. Perico	29/05/09	R. Dolci	29/05/09	R. Trapletti	29/05/09

The callbacks refer to the same document

Modification Description	Coordinates	Date	Signature	Replaced N°	Replaced by N°

ON/OFF Circuit
DC Power Supply

Code 01.17.010.004

Draw 9706

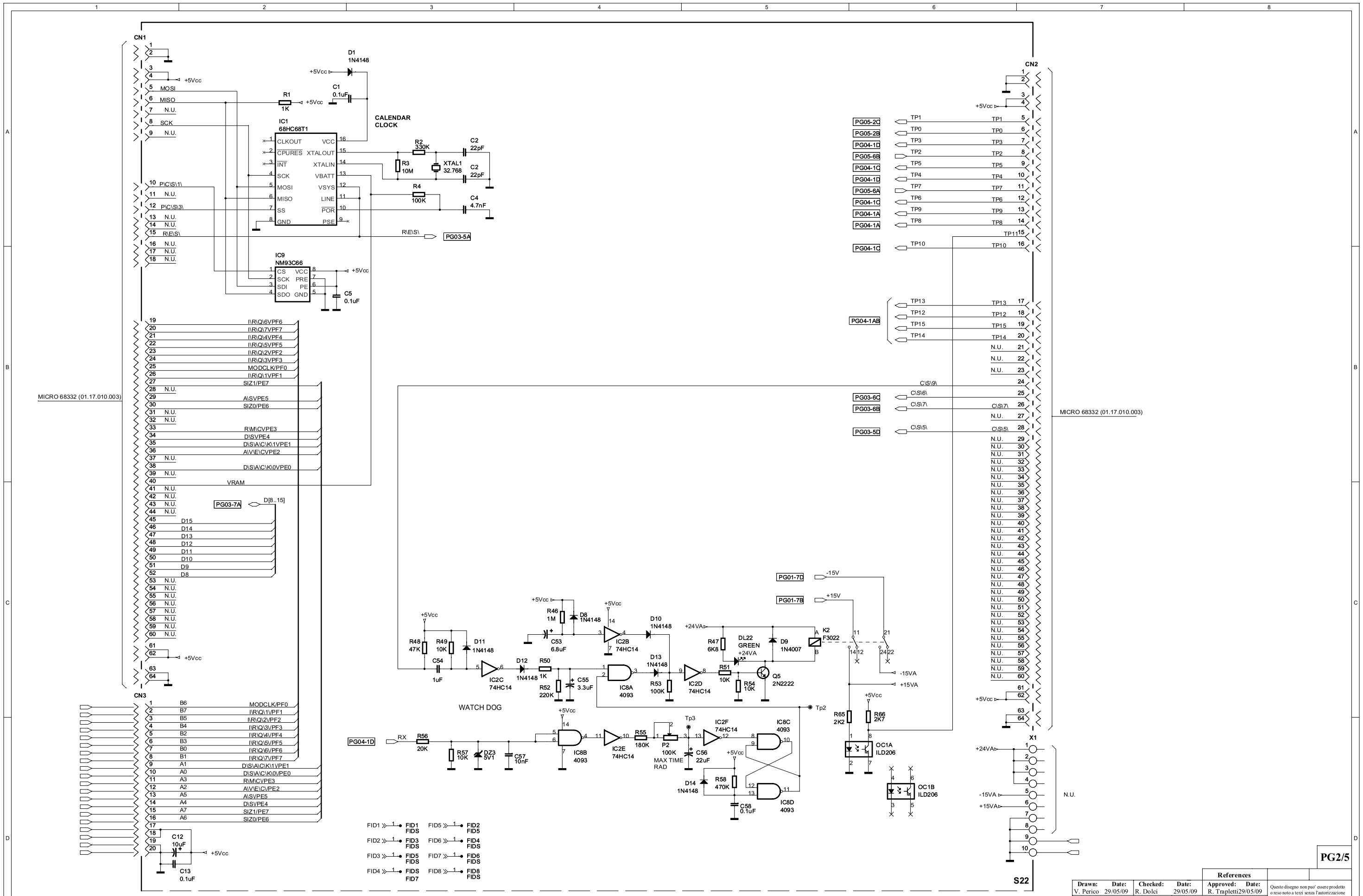
CN1
CN2
CN3
MICRO 68332 (01.17.010.003)
CALENDAR CLOCK
IC1 68HC68T1
IC9 NM93C66
D1 1N4148
R1 1K
C1 0.1uF
R2 330K
R3 10M
R4 100K
C2 22pF
C4 4.7nF
XTAL1 32.768
C5 0.1uF
PG03-5A
PG03-7A
D[8..15]
WATCH DOG
IC2C 74HC14
IC8A 4093
IC2B 74HC14
IC2D 74HC14
IC8B 4093
IC2E 74HC14
IC2F 74HC14
IC8C 4093
IC8D 4093
Q5 2N2222
K2 F3022
DL22 GREEN
OC1A ILD206
OC1B ILD206
P2 100K MAX TIME RAD
PG01-7D
PG01-7B
PG04-1D
X1
S22
N.U.
PG2/5
Drawn: V. Perico Date: 29/05/09
Checked: R. Dolci Date: 29/05/09
References
Approved: R. Trapletti Date: 29/05/09
Microprocessor Connections
Code 01.17.010.004
Draw 9706
Modification Description
Coordinates
Date
Signature
Replaced N°
Replaced by N°

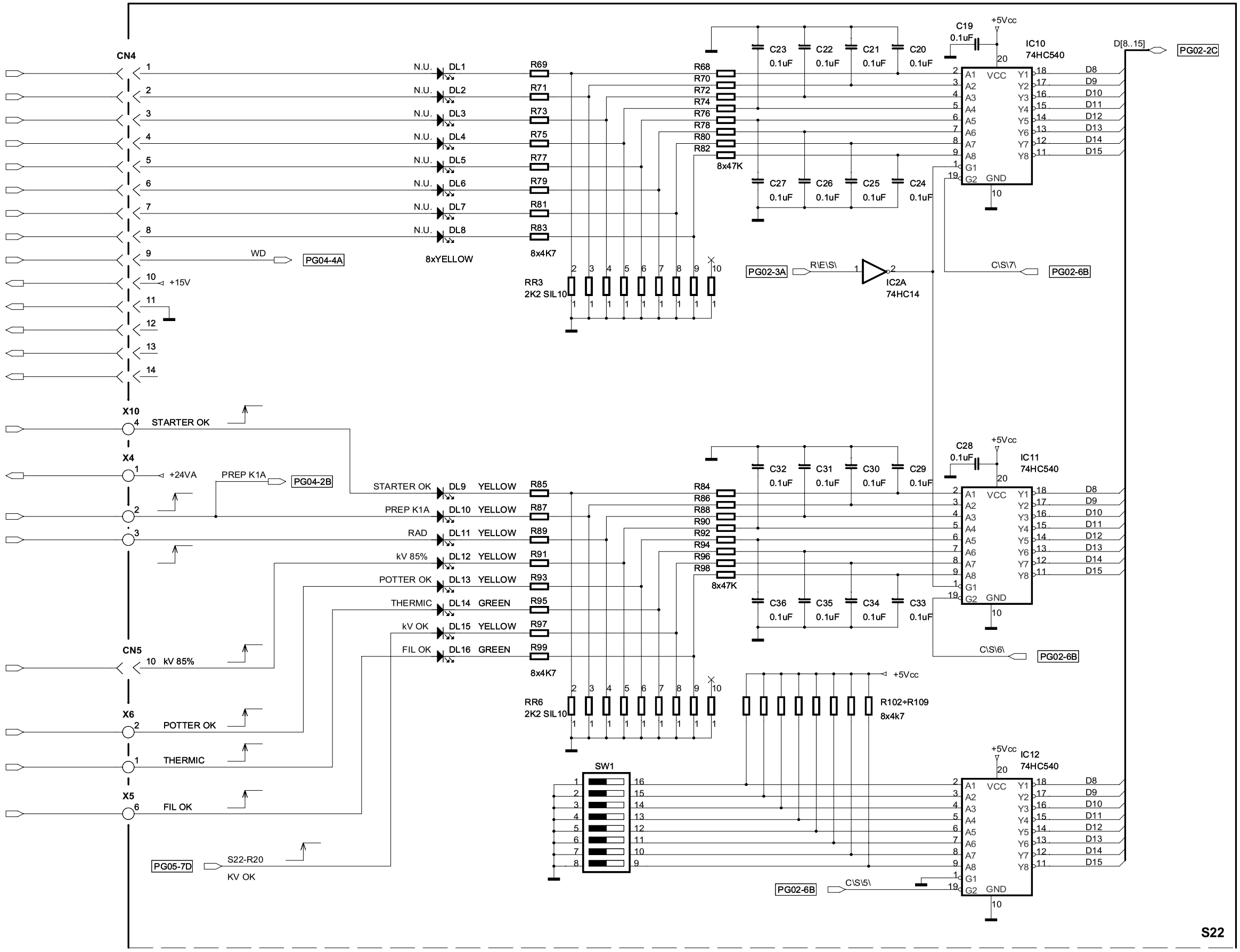

PG3/5

Drawn:	Date:	Checked:	Date:	References Approved:	Date:
V. Perico	29/05/09	R. Dolci	29/05/09	R. Trapletti	29/05/09

Input

Code **01.17.010.004**

Draw **9706**

Modification Description	Coordinates	Date	Signature	Replaced N°	Replaced by N°

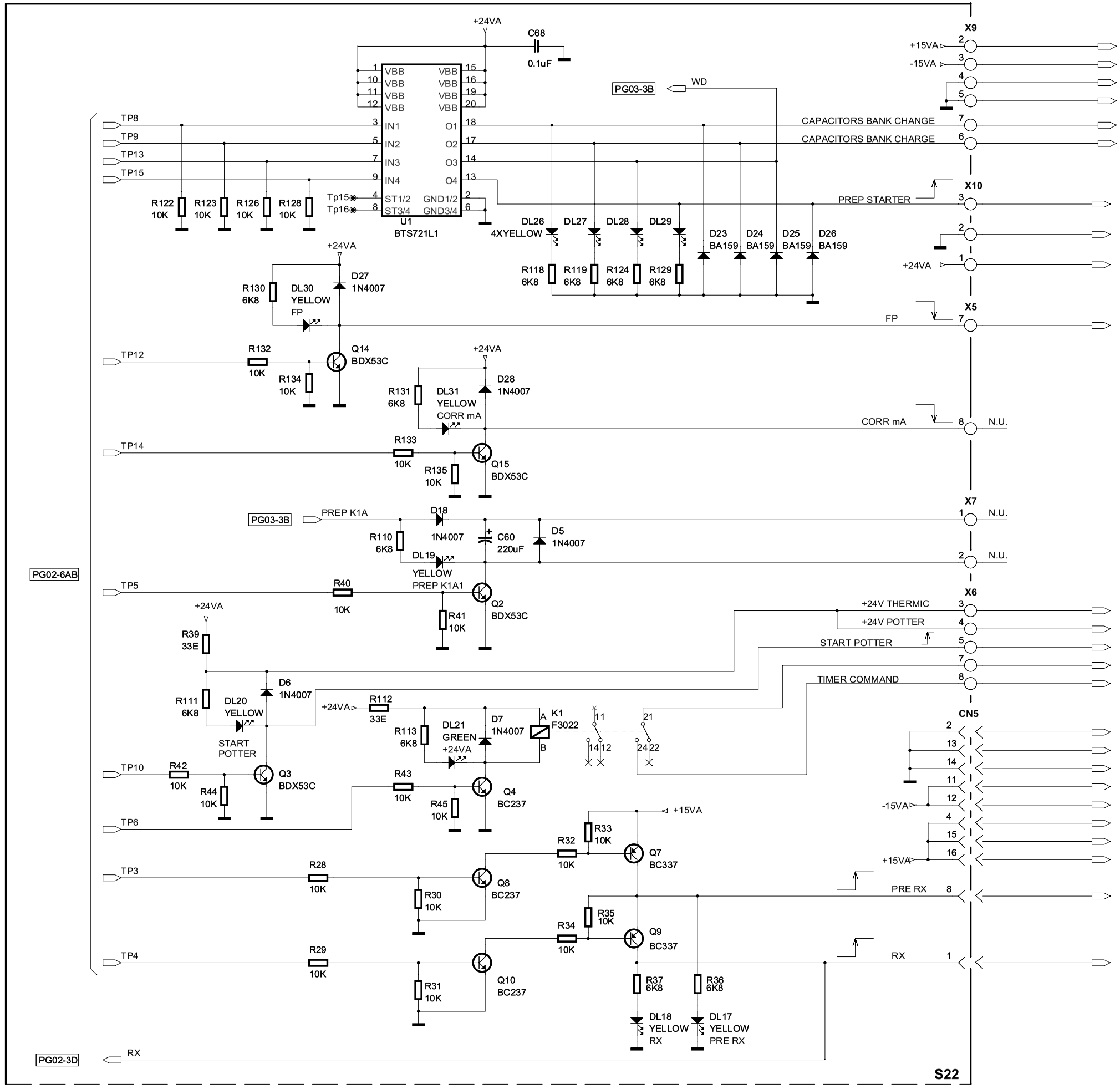

PG4/5

Modification Description	Coordinates	Date	Signature	Replaced N°	Replaced by N°

Drawn:	Date:	Checked:	Date:	References Approved:	Date:
V. Perico	29/05/09	R. Dolci	29/05/09	R. Trapletti	29/05/09

Output

Code **01.17.010.004**

Draw **9706**

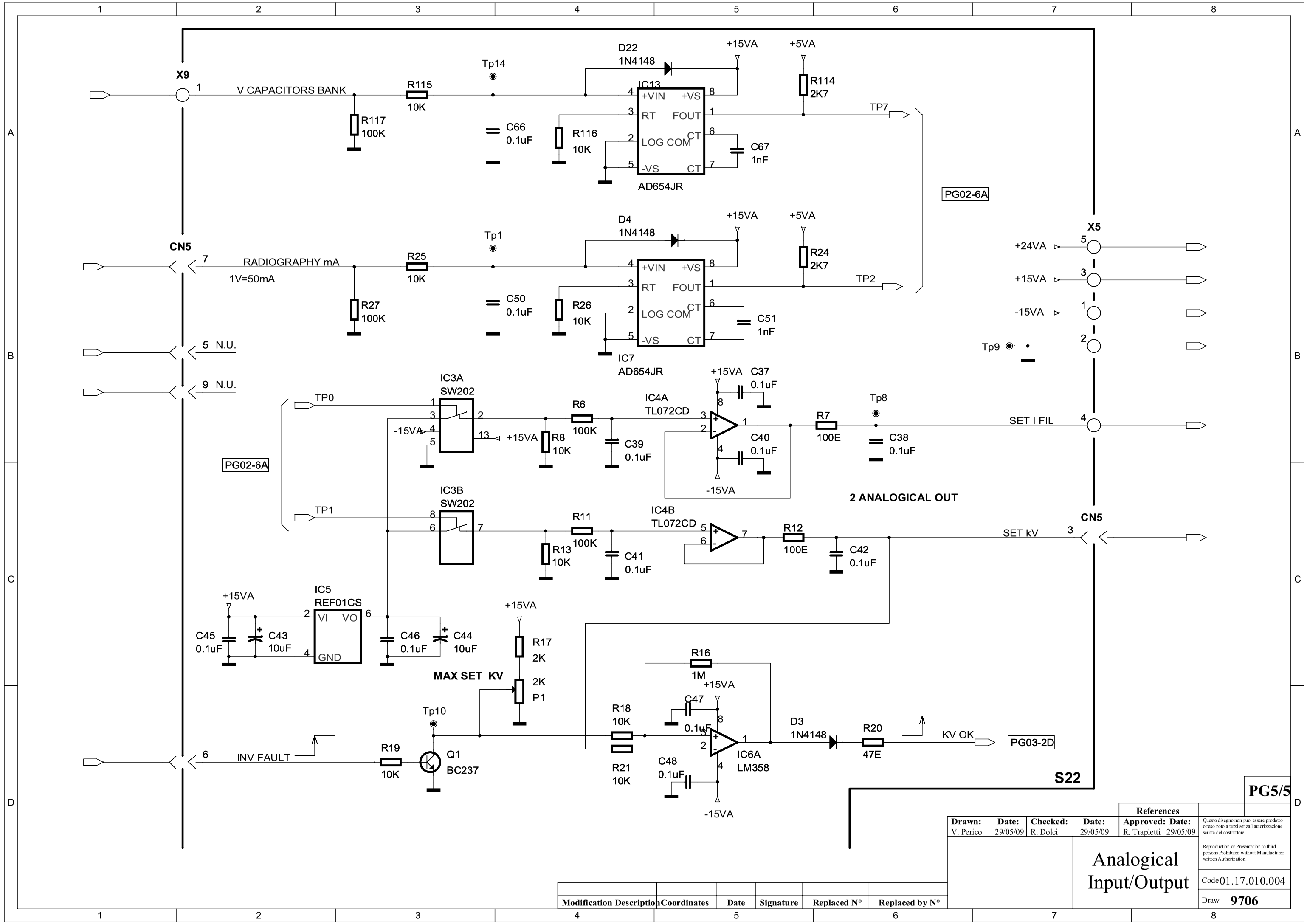
X9
V CAPACITORS BANK
R115
10K
R117
100K
Tp14
C66
0.1uF
D22
1N4148
+15VA
+5VA
IC13
+VIN
+VS
RT
FOUT
LOG COM
CT
-VS
CT
AD654JR
R116
10K
C67
1nF
R114
2K7
TP7
PG02-6A
CN5
RADIOGRAPHY mA
1V=50mA
R25
10K
R27
100K
Tp1
C50
0.1uF
D4
1N4148
IC7
AD654JR
R26
10K
C51
1nF
R24
2K7
TP2
5 N.U.
9 N.U.
X5
+24VA
+15VA
-15VA
Tp9
TP0
IC3A
SW202
-15VA
+15VA
R8
10K
R6
100K
C39
0.1uF
IC4A
TL072CD
C37
0.1uF
C40
0.1uF
R7
100E
Tp8
C38
0.1uF
SET I FIL
PG02-6A
TP1
IC3B
SW202
R11
100K
R13
10K
C41
0.1uF
IC4B
TL072CD
R12
100E
C42
0.1uF
SET kV
2 ANALOGICAL OUT
CN5
IC5
REF01CS
VI
VO
GND
C45
0.1uF
C43
10uF
C46
0.1uF
C44
10uF
R17
2K
MAX SET KV
2K
P1
R16
1M
C47
0.1uF
R18
10K
R21
10K
C48
0.1uF
IC6A
LM358
D3
1N4148
R20
47E
KV OK
PG03-2D
Tp10
INV FAULT
R19
10K
Q1
BC237
S22
PG5/5
Drawn: V. Perico Date: 29/05/09
Checked: R. Dolci Date: 29/05/09
References
Approved: R. Trapletti Date: 29/05/09
Questo disegno non puo' essere prodotto o reso noto a terzi senza l'autorizzazione scritta del costruttore.
Reproduction or Presentation to third persons Prohibited without Manufacturer written Authorization.
Analogical Input/Output
Code 01.17.010.004
Draw 9706
Modification Description
Coordinates
Date
Signature
Replaced N°
Replaced by N°

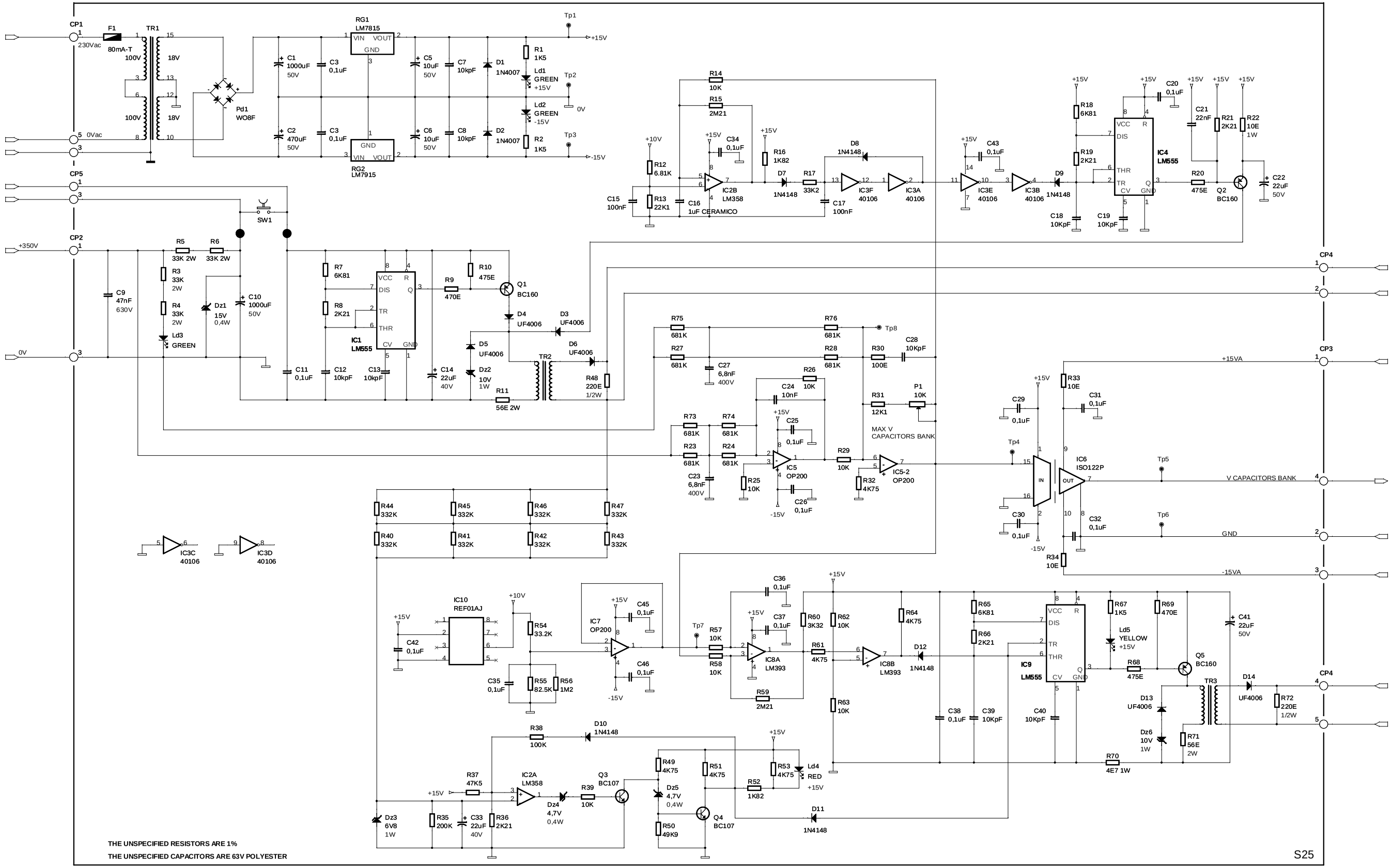

PG1/1

Drawn:	Date:	Checked:	Date:	References Approved:	Date:
V. Perico	22-01-04	R. Sala	22-01-04	//	22-01-04

S25
Capacitors Bank Control

Code **01.17.005.009**
Draw **9680**

Modification Description	Coordinates	Date	Signature	Replaced N°	Replaced by N°
C16 from 10nF to 1uF	4A	13/05/09	V. Perico	7621	

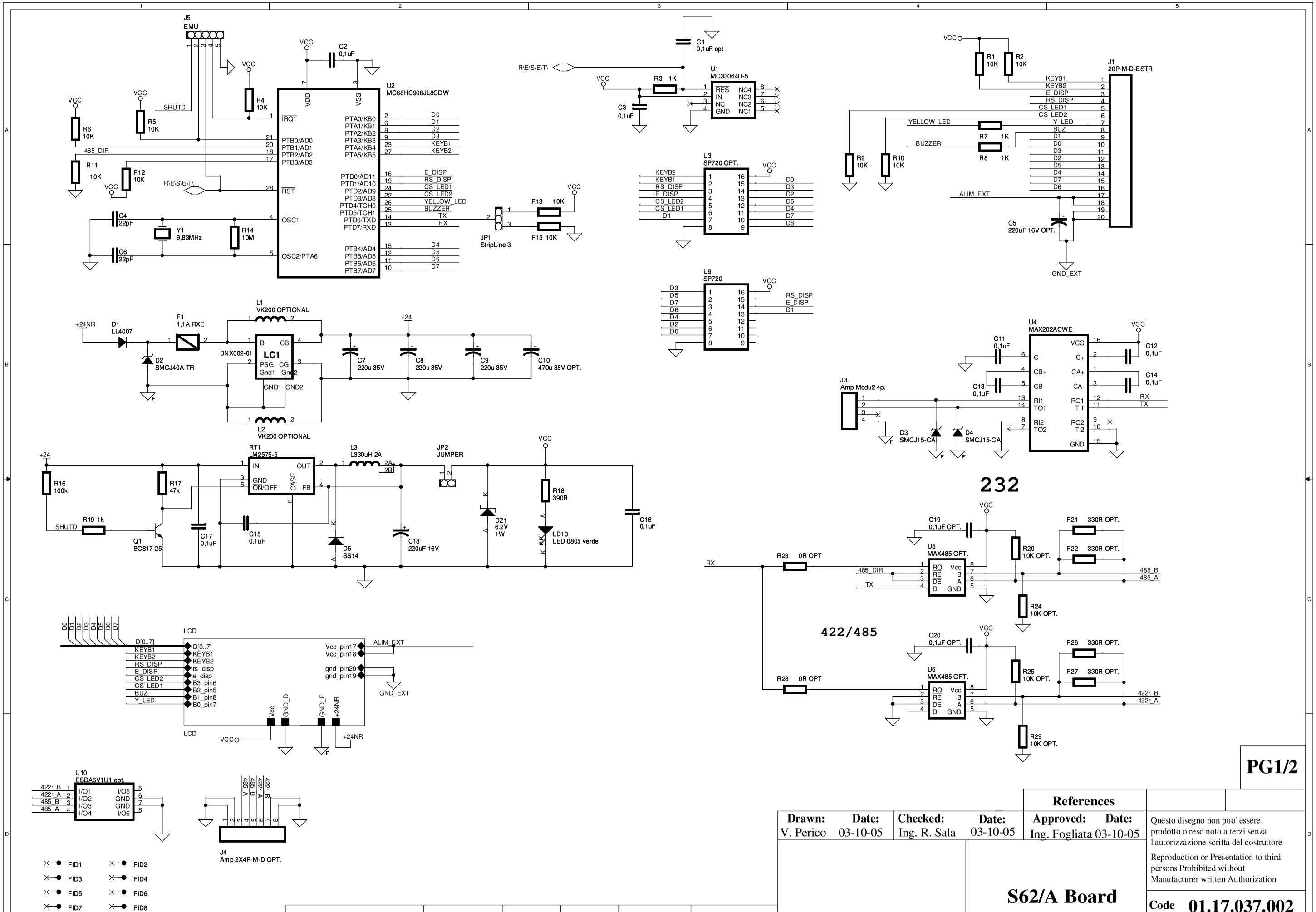

PG1/2

Drawn:	Date:	Checked:	Date:	Approved:	Date:
V. Perico	03-10-05	Ing. R. Sala	03-10-05	Ing. Fogliata	03-10-05

References

S62/A Board

Code 01.17.037.002

Doc. 8202

Modification Description	Coordinates	Date	Signature	Replaced N°	Replaced by N°

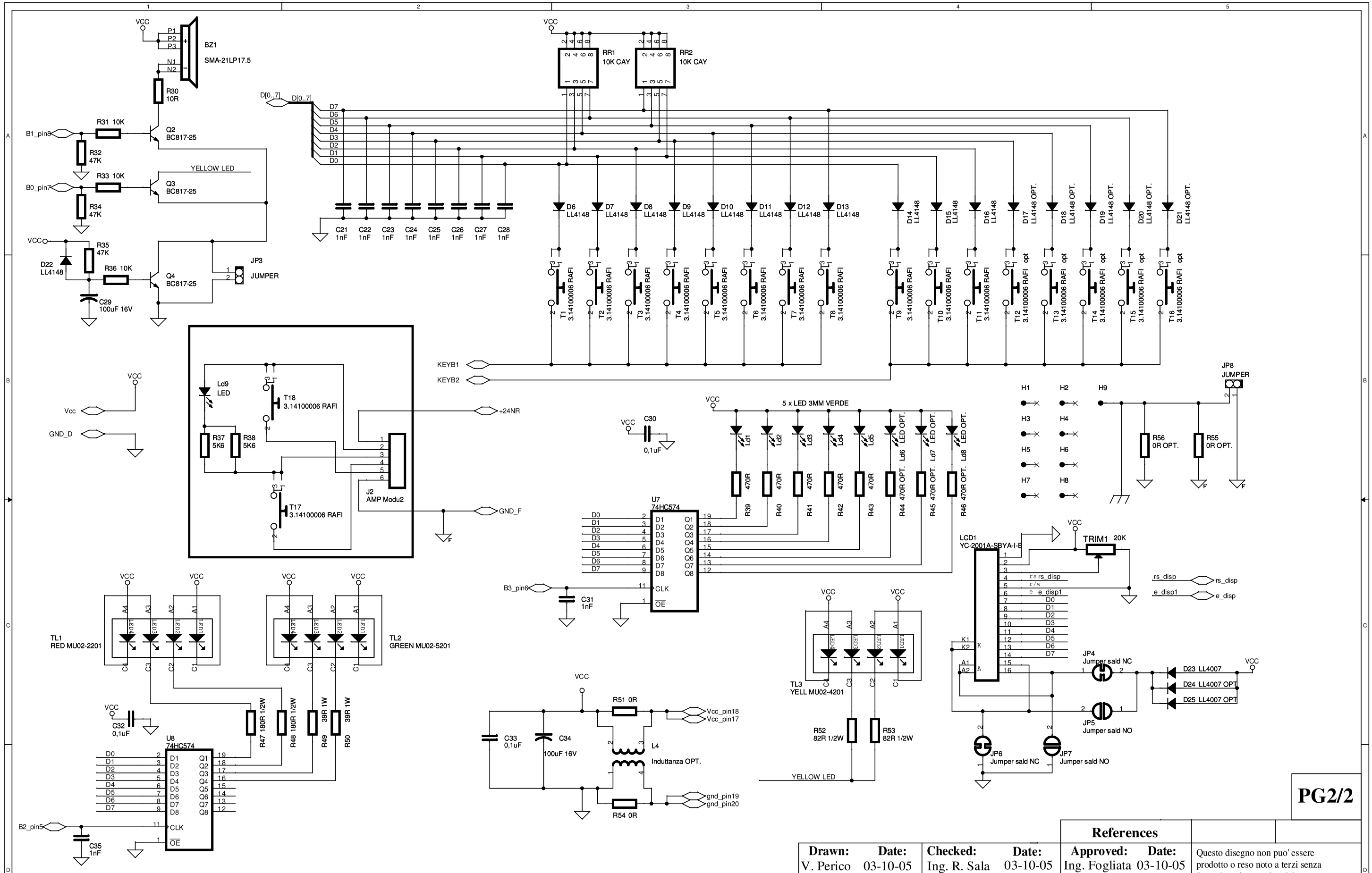

PG2/2

Drawn:	Date:	Checked:	Date:	References Approved:	Date:
V. Perico	03-10-05	Ing. R. Sala	03-10-05	Ing. Fogliata	03-10-05

S62/A Board

Code **01.17.037.002**

Doc. **8202**

Modification Description	Coordinates	Date	Signature	Replaced N°	Replaced by N°

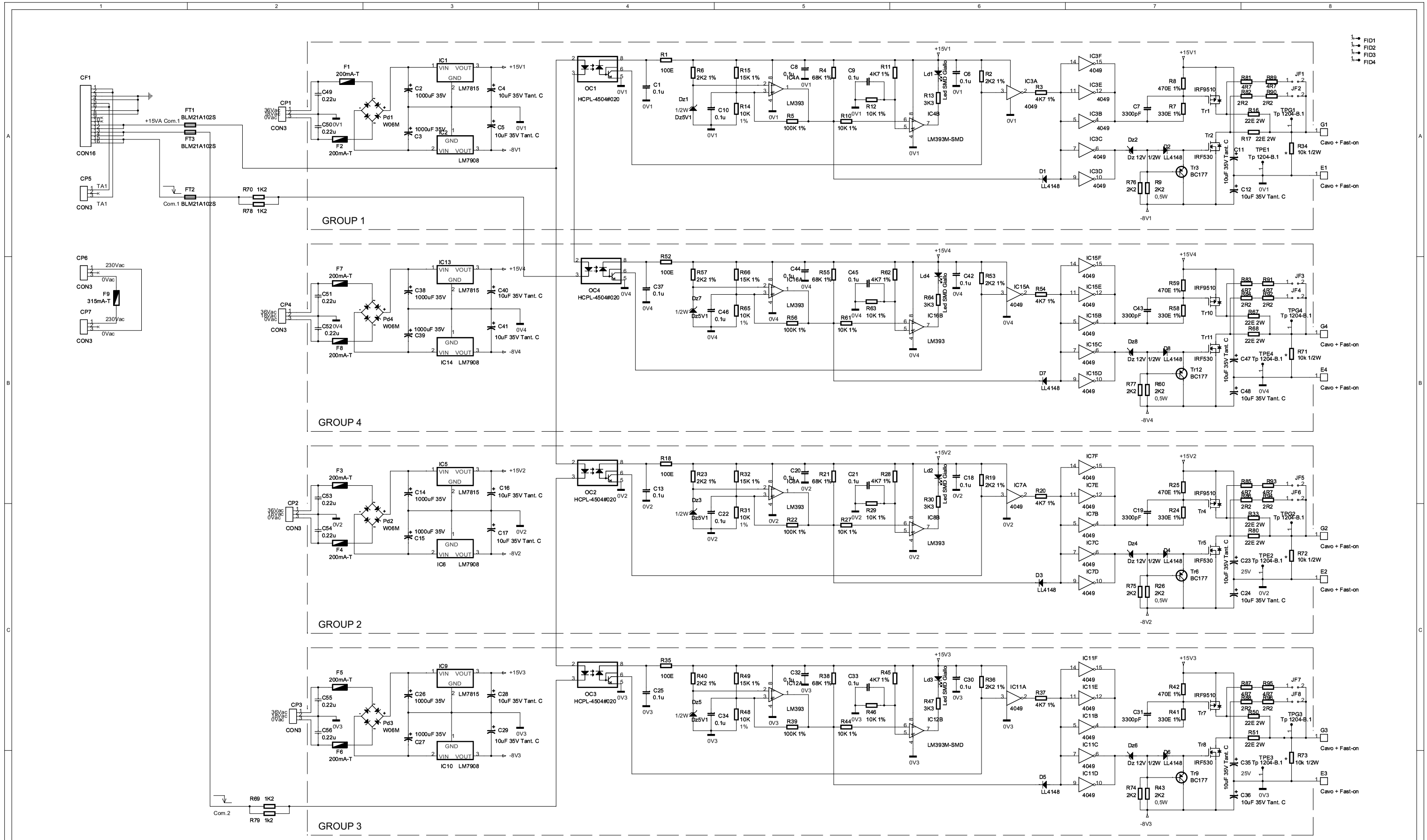

* Montaggio opzionale

Montare dissipatore su regolatori

Sotto gli opto prevedere cava di almeno
2mm per tutta la lunghezza dell'OC

S81

PG1/1

Drawn:	Date:	Checked:	Date:	References Approved:	Date:
V. Perico	21-04-08	D. Mainetti	10-04-09	R. Trapletti	10-04-09

S81 Driver Board

Code **01.17.081.001**

Draw **9331**

Modification Description	Coordinates	Date	Signature	Replaced N°	Replaced by N°

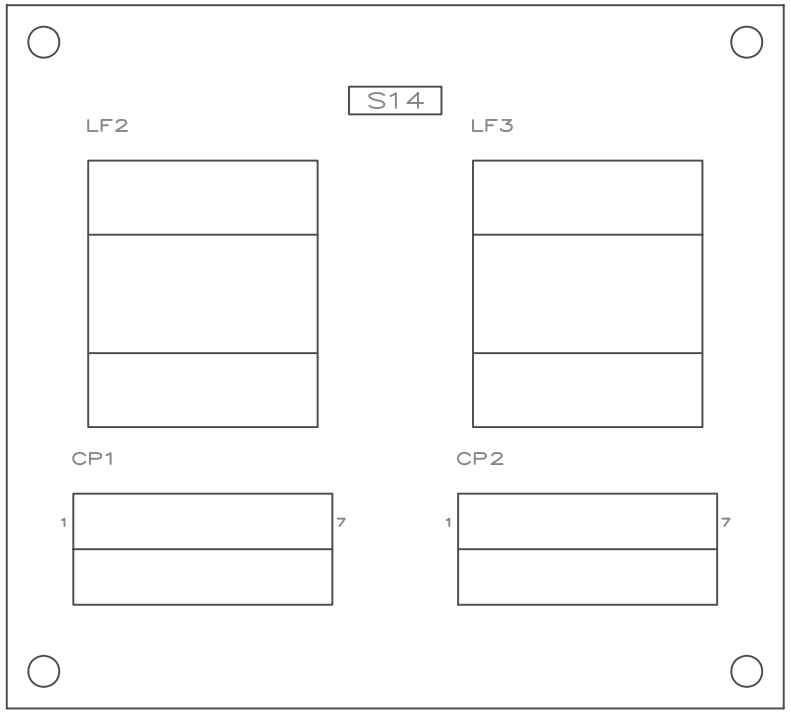

Drawn	Checked	Approved	Weight (kg)	Scale
M.Farina	C.Bonazzi	A. Mariani	/	1:1
DATE 01-01-1999	DATE 01-01-1999	DATE 01-01-1999	Code Art. 01.17.005.005	

TOPOGRAFIC
S14 CARD
LINE FILTER

UNI | CEI | IEC

PREVIOUS CODE /

NEXT CODE /

Needed quantities for drawn groups

CARTOUCHE A3-E

Doc. N° DOC. 5040

Foglio N° Sheet 1/1

MODIFICATION DESCRIPTION	Coordinates	Date	Signature	Replaced Draw N°	Replaced by Draw N°

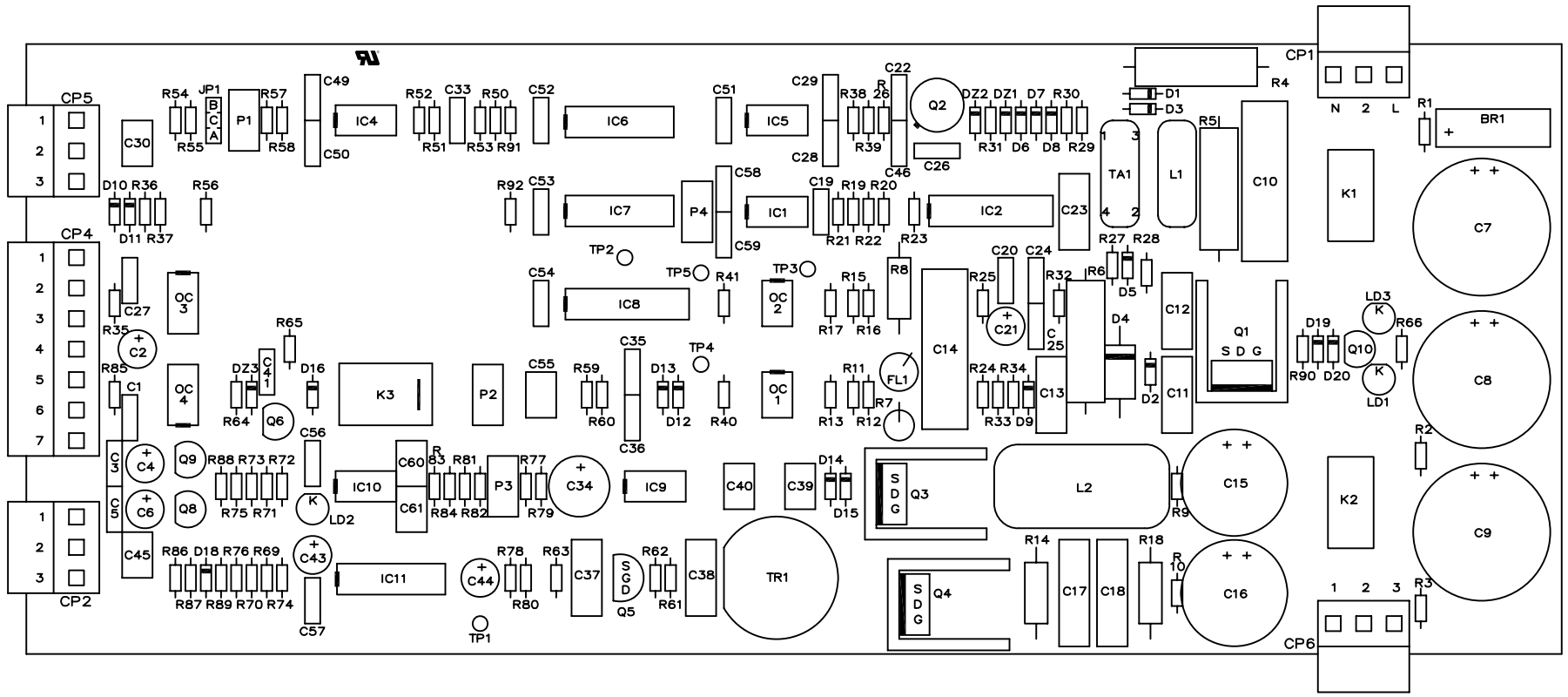

Drawn	Checked	Approved	Weight (kg)	Scale
V. Perico	Ing. R. Dolci	R. Trapletti	/	/
DATE 13-05-09	DATE 13-05-09	DATE 13-05-09	Code Art. 01.17.001.029	

UNI | CEI | IEC

PREVIOUS CODE /

NEXT CODE /

Filament 400Hz Basic S15/B BOARD

Needed quantities for drawn groups

CARTOUCHE A3-E

Doc. N° DOC. 9677

Foglio N° Sheet 1/1

MODIFICATION DESCRIPTION	Coordinates	Date	Signature	Replaced Draw N°	Replaced by Draw N°

DESCRIZIONE MODIFICA	Coordinate	Data	Firma	Sost. il dis. N°	Sost. dal dis. N°
Aggiornato cartiglio		30-01-04		5685	

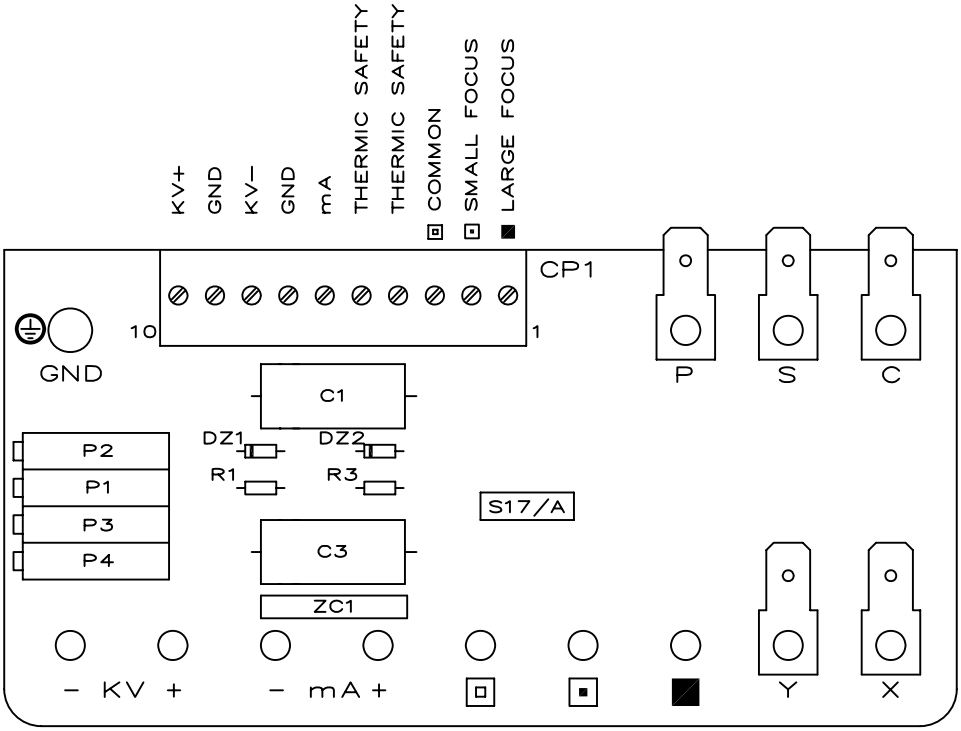

Pos.	Provenienza	Modello	Codice	Lung.(cm) Toll.+1cm	Colore	Ø Est. mm	Codice	Destinazione	Modello	Codice
		Capicorda							Capicorda	
ESTREMITA' DI COLLEGAMENTO				MEZZO TRASMISSIVO / CAVO				ESTREMITA' DI COLLEGAMENTO		

Disegnato	Controllato	Approvato	Peso (kg)	Scala
V. Perico	M. Gotti	/	/	/
DATA 30-01-2004	DATA 30-01-2004	DATA /	Codice Art. Code 01.17.008.025	

VEDI IMPLOSIONI

UNI | CEI | IEC

COD. PRECEDENTE

COD. SUCESSIVO

Quant. necessaria per gruppi a dis.

CARTIGLIO A4-E

Dis. N° Draw 7547

Foglio N° Sheet 1/1

international medical devices s.p.a.
via A. Moro 5/7
Scanzorosciate (Bg) ITALIA
Tel. 035-668163/4 fax 035-668166

Monoblocco Scheda S17/A Monoblock S17/A Board

SCHEDA S19/C

E100-30

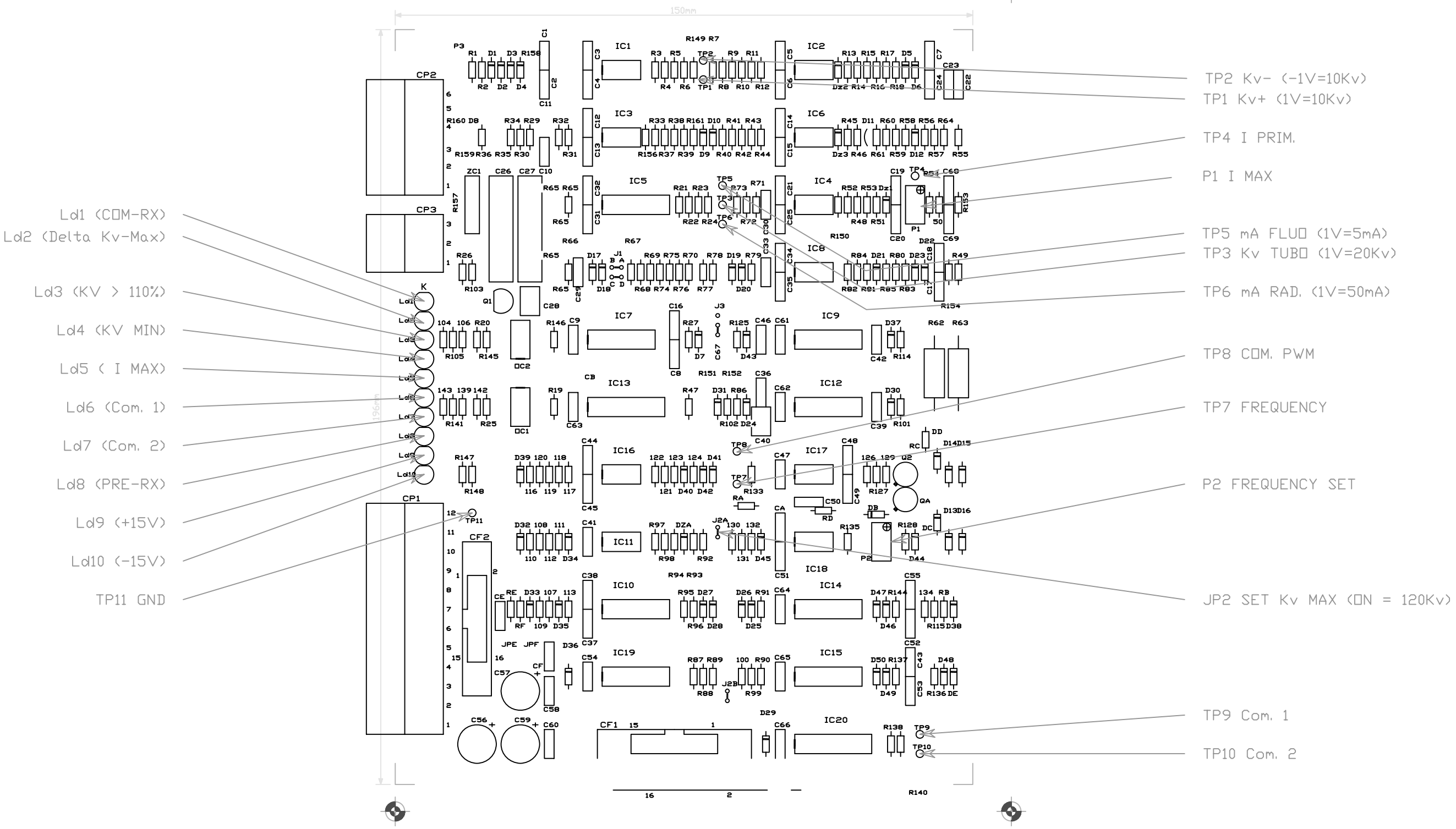

Disegnato	Controllato	Approvato	Peso (kg)	Scala
V. Perico	Ing. R. Dolci	R. Trapletti	0,00	1 : 1
DATA 15-07-2004	DATA 15-07-2004	DATA /	Codice Art. Code 01.17.008.040	

UNI | CEI | IEC

COD. PRECEDENTE /

COD. SUCESSIVO /

S19/C Board
E-100 30 KW
TP e LED

Quant. necessaria per gruppi a dis.

CARTIGLIO A3-E

Doc. N° DOC. 9685

Foglio N° Sheet 1/1

DESCRIZIONE MODIFICA	Coordinate	Data	Firma	Sost. il dis. N°	Sost. dal dis. N°

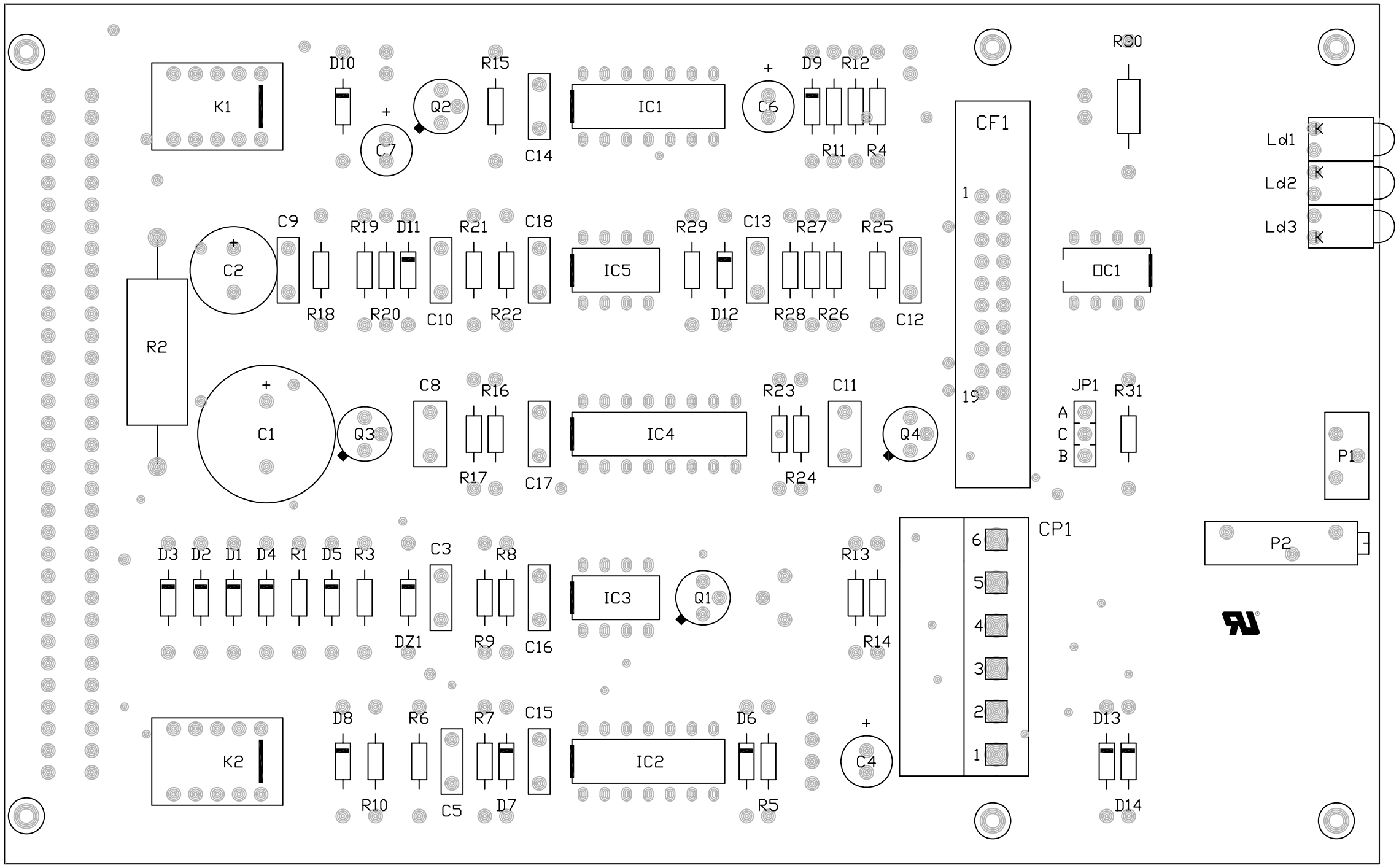

Drawn	Checked	Approved	Weight (kg)	Scale
V. Perico	Ing. Dolci	R. Trapletti		
DATE 12-05-09	DATE 12-05-09	DATE 12-05-09	Code Art. 01.17.006.003	

S20/A BOARD
SCHEDA S20/A

UNI | CEI | IEC

PREVIOUS CODE

NEXT CODE

Needed quantities for drawn groups

CARTOUCHE A3-E

Doc. N° DOC. 9669

Foglio N° Sheet 1/1

MODIFICATION DESCRIPTION	Coordinates	Date	Signature	Replaced Draw N°	Replaced by Draw N°

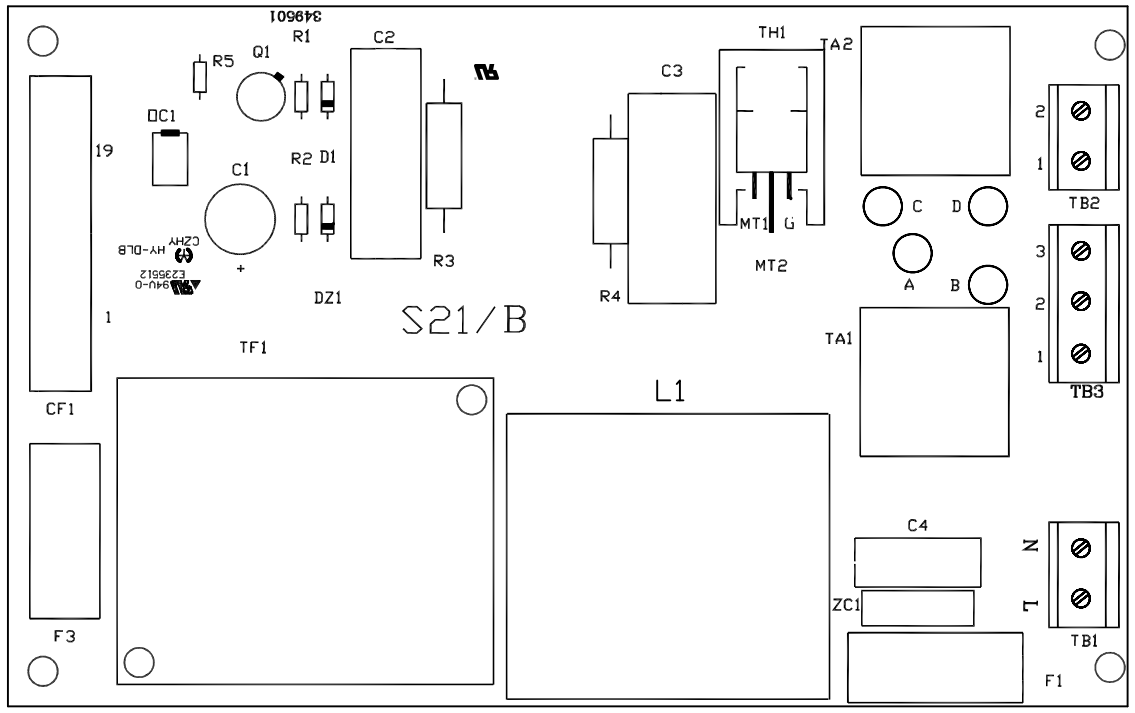

Drawn	Checked	Approved	Weight (kg)	Scale
V. Perico	Ing. R. Dolci	R. Trapletti	/	/
DATE 12-05-2009	DATE 12-05-2009	DATE 12-05-2009	Code Art. 01.17.003.006	

UNI | CEI | IEC

PREVIOUS CODE

NEXT CODE

S21/B BOARD LAYOUT

Needed quantities for drawn groups

CARTOUCHE A3-E

Doc. N° DOC. 9670

Foglio N° Sheet 1/1

MODIFICATION DESCRIPTION	Coordinates	Date	Signature	Replaced Draw N°	Replaced by Draw N°

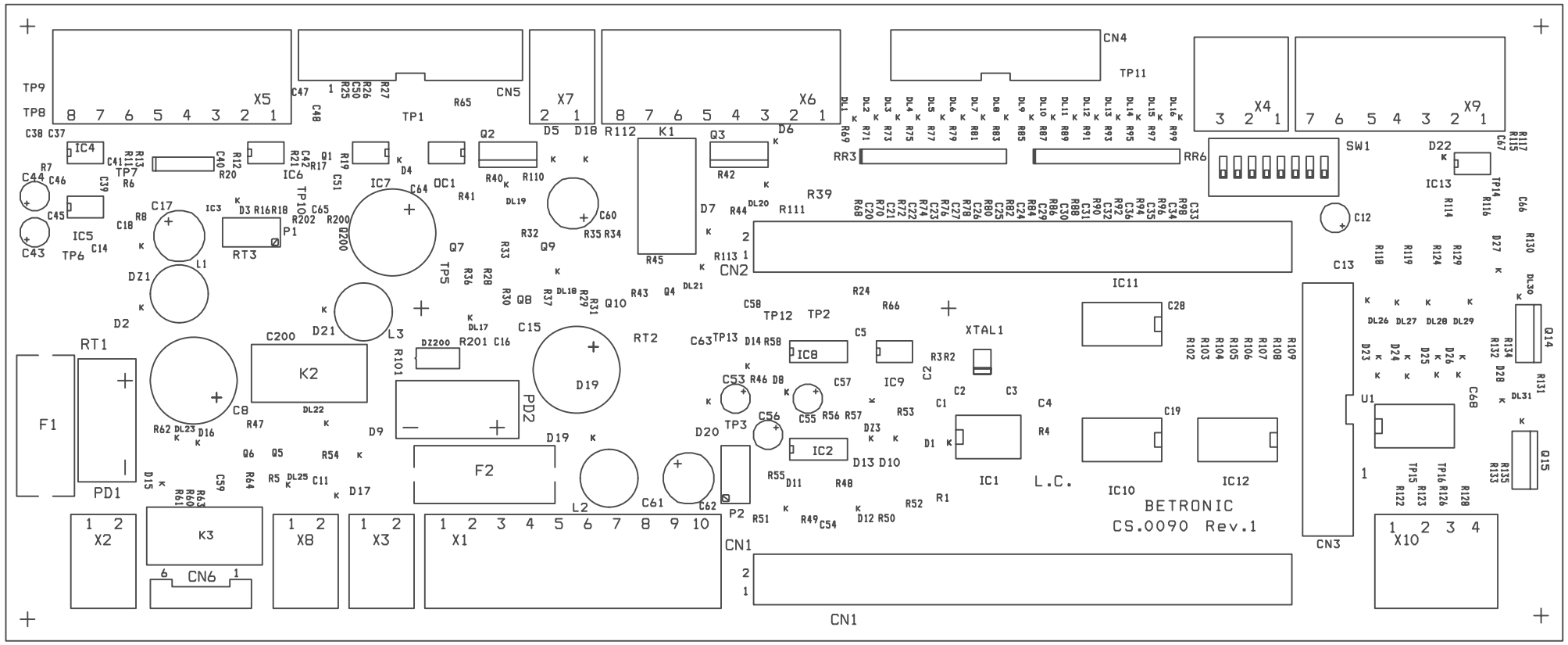

Drawn	Checked	Approved	Weight (kg)	Scale	
V. Perico	R. Dolci	R. Trapletti	/	1:1	
DATE 29-05-2009	DATE 29-05-2009	DATE 29-05-2009	Code Art.	01.17.010.004	

UNI | CEI | IEC

PREVIOUS CODE /

NEXT CODE /

S22uP Base Board

Needed quantities for drawn groups

CARTOUCHE A3-E

Doc. N° DOC. 9705

Foglio N° Sheet 1/1

MODIFICATION DESCRIPTION	Coordinates	Date	Signature	Replaced Draw N°	Replaced by Draw N°

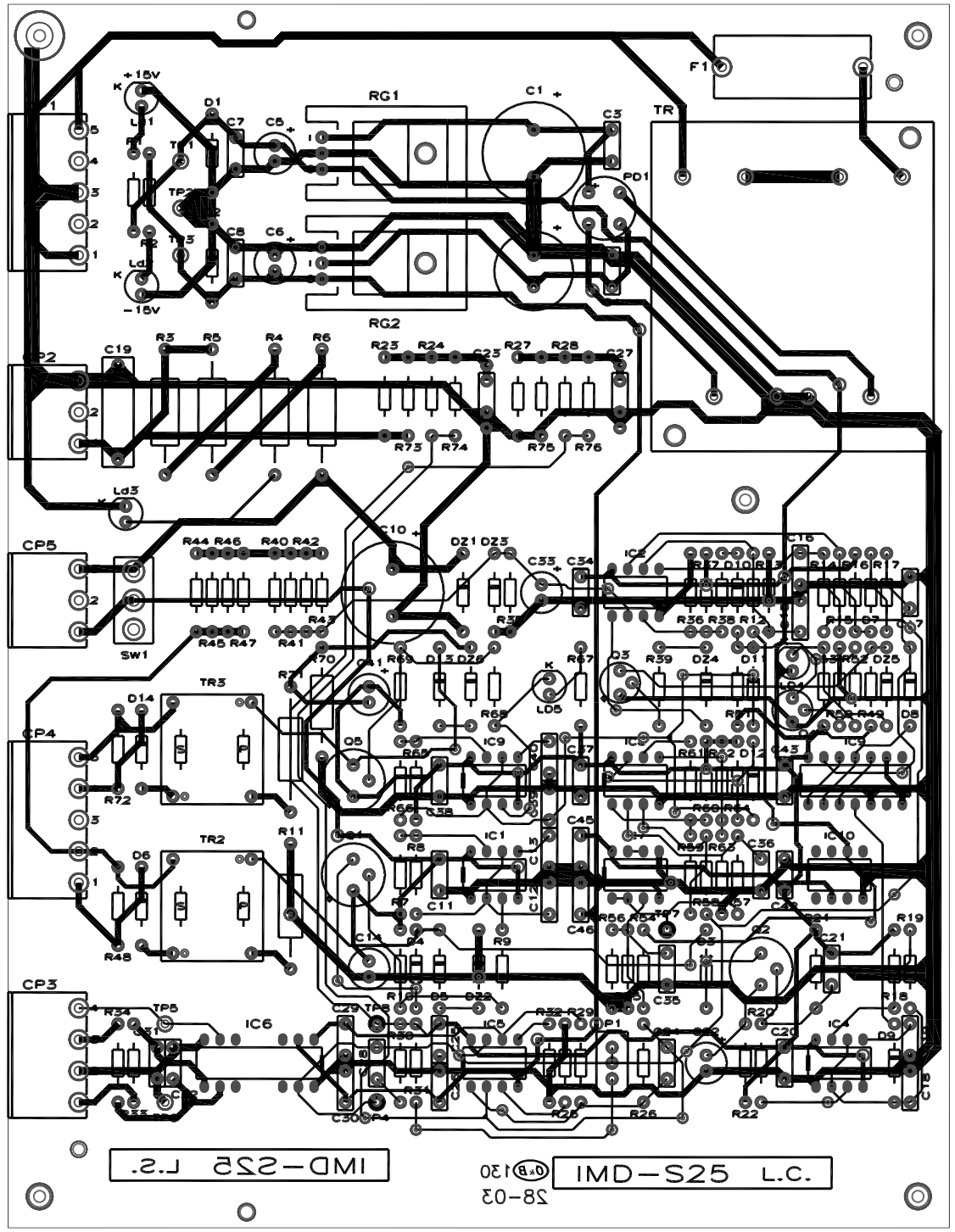

Drawn	Checked	Approved	Weight (kg)	Scale
V. Perico	R. Sala	/	/	/
DATE 15-04-03	DATE 15-04-03	DATE /	Code Art. 01.17.005.009	

S25 BOARD
SCHEDA S25

01.02.005.071
01.02.025.031
01.02.047.018

UNI	CEI	IEC

PREVIOUS CODE /

NEXT CODE /

Needed quantities for drawn groups

CARTOUCHE A3-E

Doc. N° DOC. 7613

Foglio N° Sheet 1/1

MODIFICATION DESCRIPTION	Coordinates	Date	Signature	Replaced Draw N°	Replaced by Draw N°

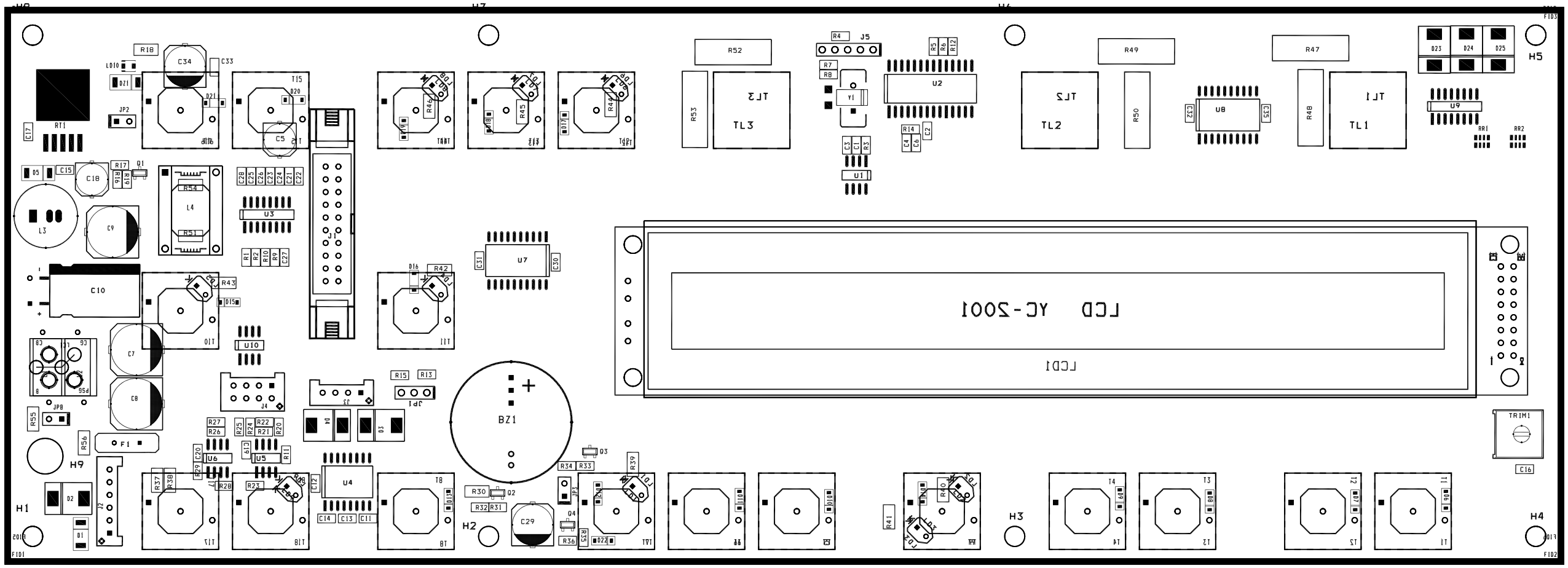

CHANGED DISPLAY 20x1 BT12009 WITH				7632	
THE NEW DISPLAY YC-2001A-SBYA-I-B					
MODIFICATION DESCRIPTION	Coordinates	Date	Signature	Replaced Draw N°	Replaced by Draw N°

Drawn	Checked	Approved	Weight (kg)	Scale
V. Perico	R. Sala	E. Fogliata	/	/
DATE 03-10-05	DATE 03-10-05	DATE 03-10-05	Code Art. 01.17.037.002	

S62/A BOARD
SCHEDA S62/A

UNI | CEI | IEC

PREVIOUS CODE /

NEXT CODE /

Needed quantities for drawn groups

CARTOUCHE A3-E

Doc. N° DOC. 8203

Foglio N° Sheet 1/1

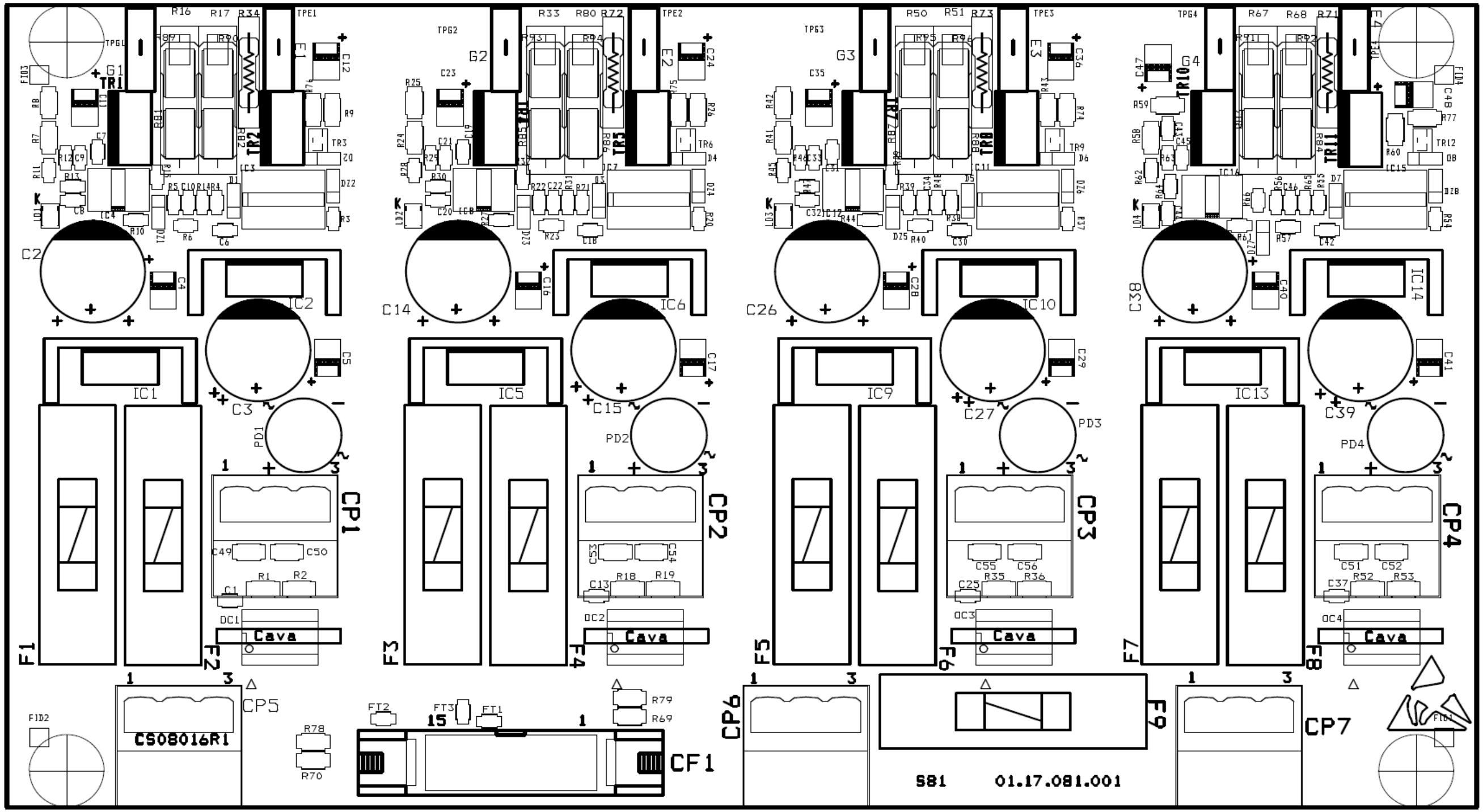

PG1/1

Modification Description	Coordinates	Date	Signature	Replaced N°	Replaced by N°

Drawn:	Date:	Checked:	Date:	References Approved:	Date:
V. Perico	27-01-09	D. Mainetti	10-04-09	R. Trapletti	10-04-09

S81 Driver Board layout

Code 01.17.081.001

Draw 9574

115Vac

Power supply

1 THERMOMAGNETIC CIRCUIT-BREAKER

The 115V power supply circuit (SEE FIGURE 1) is protected by a thermomagnetic circuit-breaker (1); should this circuit-breaker trip, disassembly all the unit casings, as explained in the SERVICE MANUAL – MAINTENANCE SECTION, and reset the circuit-breaker.

Any trip of the thermomagnetic circuit-breaker immediately after resetting can be an indication of incorrect operation of the system: contact the technical service assistance immediately.

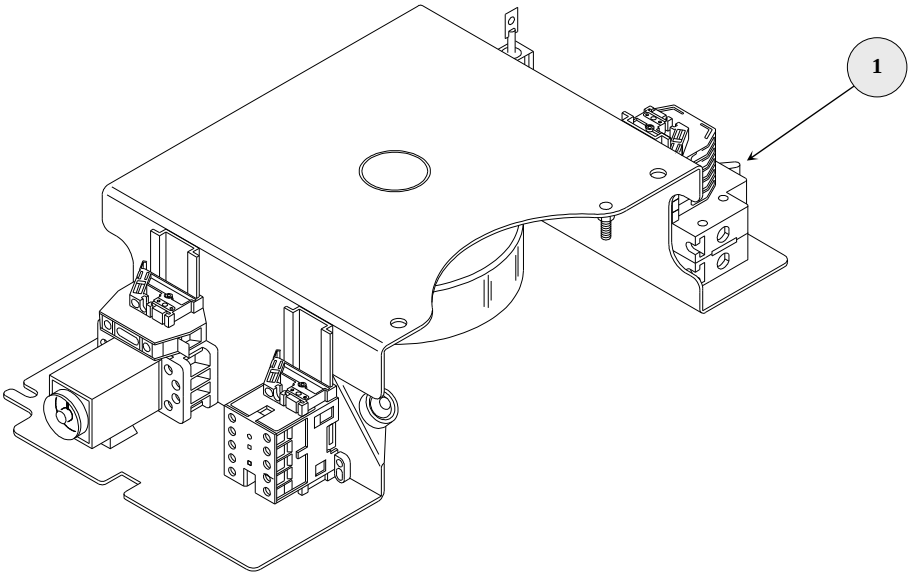

FIGURE 1 - THERMOMAGNETIC CIRCUIT-BREAKER

2 COMPONENTS REPLACEMENT

For the 115V power supply assembly dismantling and relative list of spare parts make reference to the EXPLODED DRAWINGS.

NOTE: *When you require spare part, it is necessary to tell the code of the piece and the* ***serial number of the unit*** *too.*

3 INDEX DRAWINGS

Electrical

- 9250 Supply Autotransformer 115Vac

Exploded

- 7856 115Vac Power Supply assembly

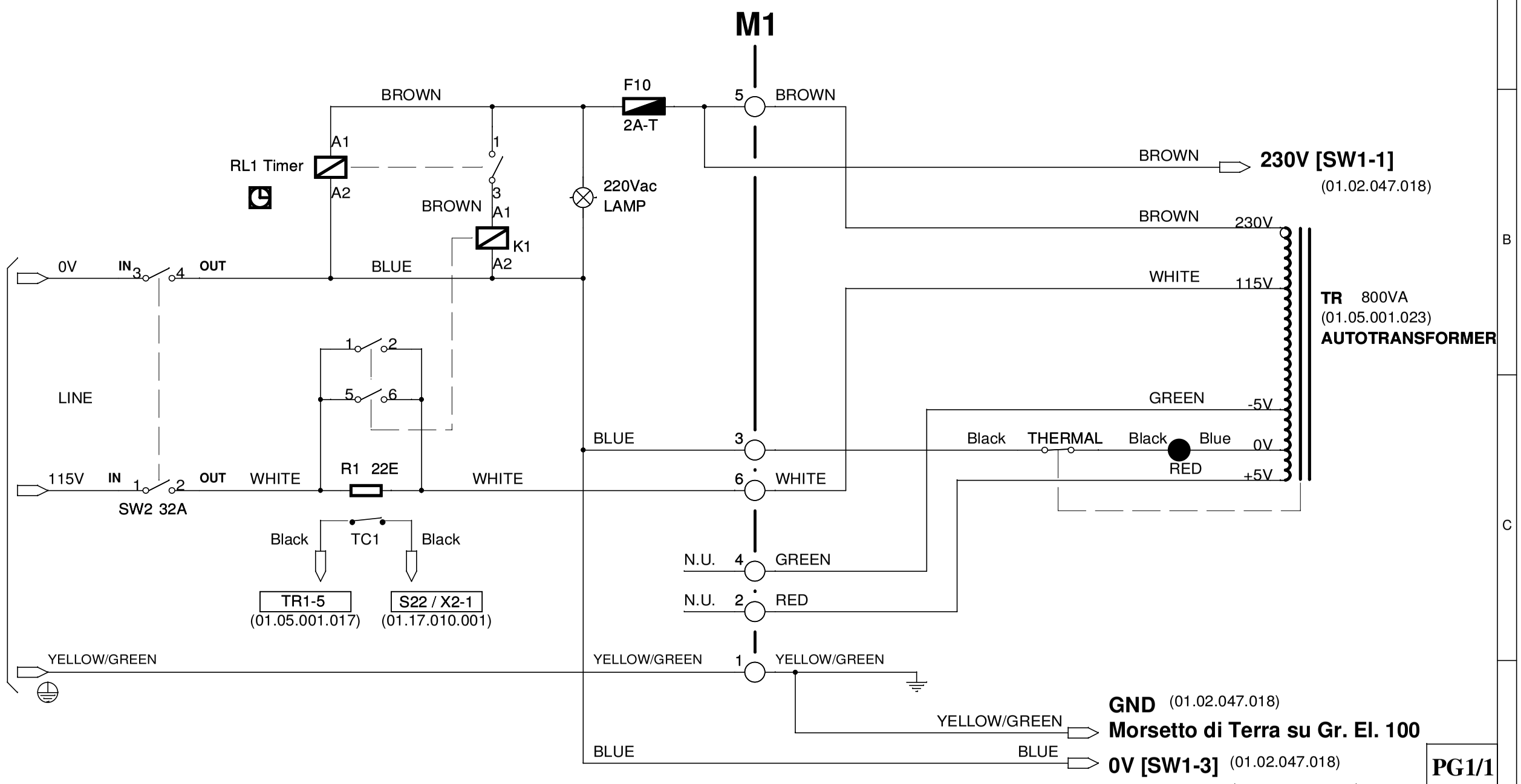

PG1/1

Drawn:	Date:	Checked:	Date:	References Approved:	Date:
V. Perico	28-01-08	R. Dolci	28-01-08	E. Fogliata	28-01-08

SUPPLY AUTOTRANSFORMER 0V-115V/230V 800 VA

Code 01.02.040.003

Draw **9250**

Modification Description	Coordinates	Date	Signature	Replaced N°	Replaced by N°
YG cable added		28-01-08	V. Perico	7662	

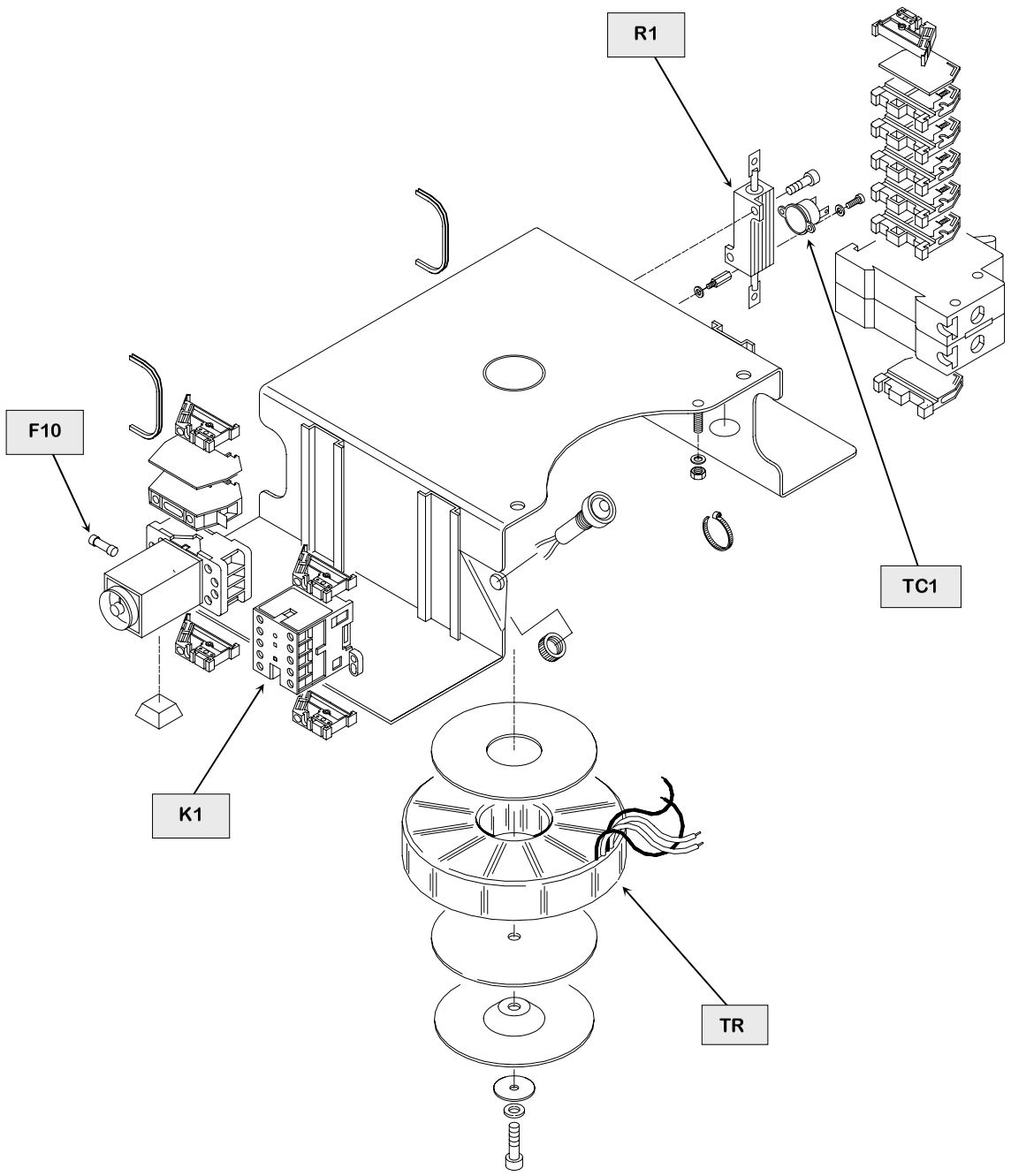

Drawing N° 01.02.040.003 - 007841

N°	DESCRIPTION	CODE	NOTE
115V POWER SUPPLY ASSEMBLY - 15/30KW MODEL		01.02.040.003	
F10	5x20 2A 250V delayed fuse	49.06.022.013	
K1	B6-30-01 220V contactor	49.06.015.016	
R1	22E 50W potentiometric resister	49.06.011.094	
TC1	SM2070 N.C. bimetallic thermostat	49.06.006.003	
TR	115-230 800VA tor. autotransformer	01.05.001.023	