nassetti

BHPN

Compressed Air Panel

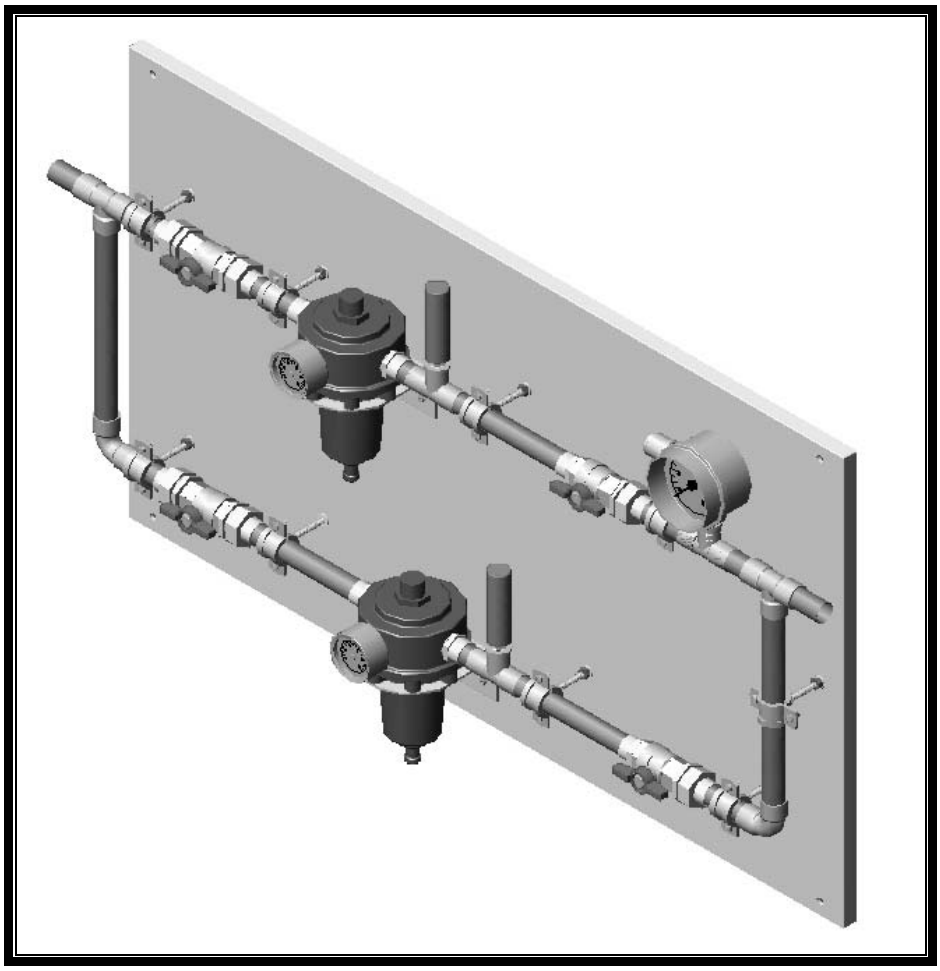

Planning and Installation Instructions

CE
0120

BHPN

Compressed Air Panel

BHPN

Compressed Air Panel

Contents **Page**

BHPN

Compressed Air Panel

1. Notes On These Instructions

The preparatory measures described here ensure the safe planning of the main requirements for the installation and operation of compressed air panel.

- Our rights for making any technical modifications in order to improve the product are reserved.
- Please read these instructions carefully and observe the safety notes and installation specifications in these instructions.
- The contents of these instructions can be altered without prior warning.
- Where there are translations into foreign languages, the English version of these instructions is binding.

Trademarks:
- BHPN is a registered trademark of Nassetti.
- All other trademarks mentioned in these instructions are the sole property of the manufacturers concerned.

1.1. Explanation of Symbols

Symbols are used to alert you on possible operational or installation faults or give you useful tips on how to use the equipment.

IMPORTANT!
The safety symbol alerts you on critical safety information and information necessary to obtain approval.

NOTE!
The note symbol gives you tips and useful information.

2. Safety Instructions

2.1. Positioning Requirements

- The options and the conditions for fixing compressed air panels are described in the following sections.
- The methods described for the fixation, gas and electrical supply are general recommendations these are complying with standards and their implementation is to be planned and designed for each individual case by qualified experts.
- The compressed air panel is not suitable for use in potentially explosive areas.
- An ambient temperature of -20°C and +60°C must be maintained during operation.
- The relative humidity must not exceed 75%.

2.2. Intended Use

- The compressed air panel is individually equipped with special equipment; depending on the types and versions, the unit is for the below purposes:
    - Compressed air panel is used in single stage medical gas systems to reduce and to regulate the output pressure of compressed air central to network pressure suitable to supply medical equipment via connections to terminal units or to be applied directly to the patient.
    - To provide the necessary pressure status data via the integrated contact manometer to the audible-visible alarm unit monitoring this unit.

- The compressed air panel is suitable for continuous use.

2.3. Instructions For Installation and Operation

Installation, testing and operation of compressed air panels must be carried out in accordance with EN 60601-1, EN 737-3 and in accordance with the manufacturer's instructions.

3. Site Preparation

The site preparation should be carried out according to the final version of medical gas system design drawings approved by the end user. Low voltage electrical installations between central medical gas system network pipes and compressed air panel-audible-visible alarm outlet should be laid according to these drawings.

4. Modes Of Fixation

The fixation of compressed air panel is done as surface mounted type. Fixation is done by using the types of anchors and screws suitable for the type of wall structure (concrete, hollow brick wall, etc.). If required suitable side support should be prepared by the authorized application staff.

No fixing materials, such as anchors, screws, threaded rods, etc., are provided by Nassetti, as the types are dependent on the actual structure of the construction onto which the compressed air panels will be mounted.

5. Installation of Units

Each unit is delivered individually packed with care, in order to prevent any scratching or denting on the compressed air panels or bending of medical gas pipes during transport.

Please store the compressed air panel in a clean, dry area, and do not remove packing until the unit is carried to the area where it will be installed. Avoid stacking units on top of each other if unpacked. Be careful not to scratch while opening the package.

The pressure reducers in the unit are in compliance with EN 738-2 standard. They are surface mounted, and installed in electrostatic powder coated (RAL 9016) 1,5mm thick DKP steel case panel. The manometers are in compliance with EN 837-1 standard; allowing easy monitoring of the pressure value. The units are installed on the panel in such a way that adjustments can be made easily. All parts of the system are connected to each other and to the copper pipe network by easily dismounting connections.

Standard production for compressed air panels is 110 and 240Nm3/h capacity with double pressure reducers with 4bar output pressure and 110 and 240Nm3/h capacity with single pressure reducer with 8bar output pressure. The panels are equipped with contact manometers transmitting pressure data to audible-visible alarm units, for which low and high pressure set values can be adjusted.

In the general design of the unit, EN 737-3, EN ISO 11197 standards, ease of use and servicing have been taken as basis; and unit types suitable for different system capacities have been developed.

The compressed air panels should be mounted at a height that would allow easy reading of the manometers.

BHPN

Compressed Air Panel

Fig 1:

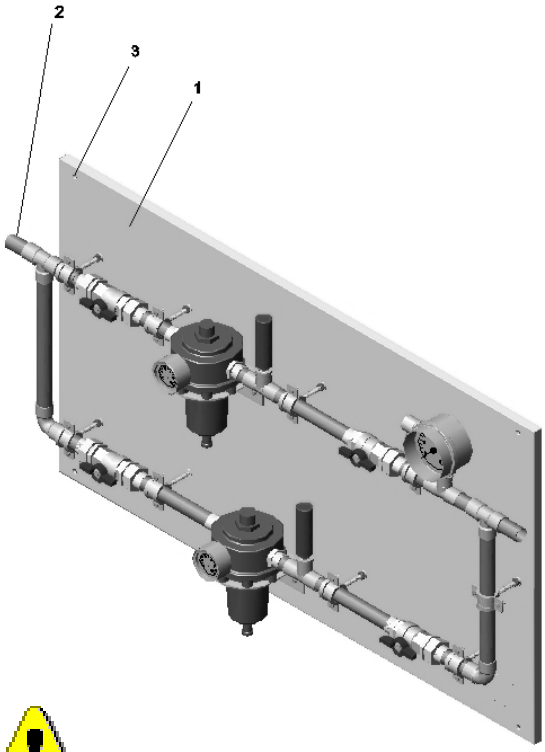

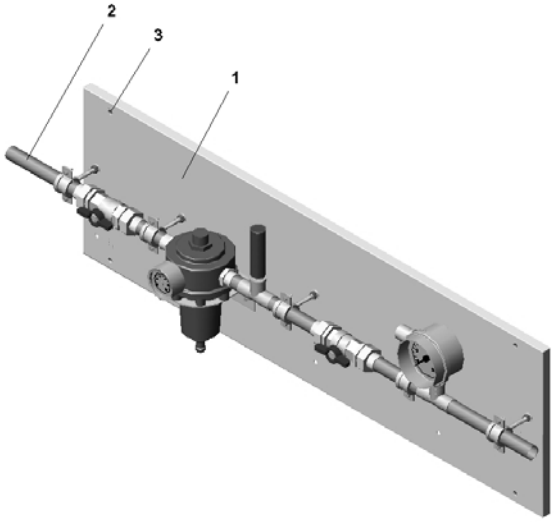

Process:

- Place the unit (1) to the place marked on the wall and fix with relevant fixation elements by using the holes (3) on the panel.
- Provide the connection of the unit to central medical gas system by using the relevant inlet and outlet gas pipes (2) and finalize the welding.
- Perform the tests according to EN 737-3 standard.

Central medical gas copper pipe installation and compressed air panel installation, testing and operation should be done according to EN 737-3 standard and manufacturer's instructions. Check the correctness of the connection of the copper pipes to feeding line. The staff in charge of the central medical gas system should make a test to control the gas type.

6. Electrical Installations

On site electrical installation of the compressed air panel is just the connection of previously installed cables of the audible-visible alarm connection cables to the contact manometer.

Electrical installations should be according to the ruling local legislations.

Installation cables should be laid considering the length that would be necessary to reach the connection point in the unit.

Only an authorized electrical technician can perform electrical connections of the liquid oxygen supply panels. Multi-core connections must be provided with end sleeves for the strands.

BHPN

Compressed Air Panel

BHPN

Compressed Air Panel

005

Nassetti Tıbbi Cihazlar San. ve Tic. Ltd. Şti.

- Merkez Mahallesi, Köyaltı Mevkii, Oruç Reis Sokak No: 6
- Yenibosna 34197 İstanbul / Turkey
- Tel: +90 (212) 451 04 50 Fax: +90 (212) 451 44 90
- Web: www.nassetti.com.tr
- E-mail: info@nassetti.com.tr / service@nassetti.com.tr

- **EU Authorized Representative:**
- **SENMED International bv**
  - Middenwetering 1, 3543 AR Utrecht
  - P.O. Box 9486, 3506 GL Utrecht
  - the Netherlands
  - Tel: +31 (30) 265 22 50 Fax: +31 (30) 262 67 37