Tram® 100-850 A and SL Modules Service Manual

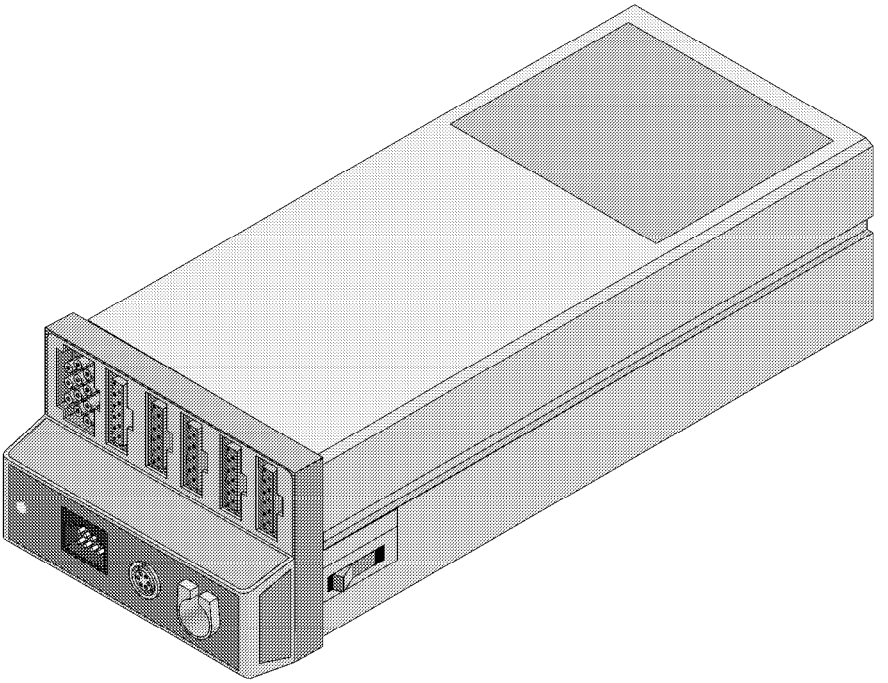

marquette®

Note:

Due to continuing product innovation, specifications in this manual are subject to change without notice.

Trademarks

Trademarked names appear throughout this document. Rather than list the names and entities that own the trademarks or insert a trademark symbol with each mention of the trademarked name, the publisher states that it is using the names only for editorial purposes and to the benefit of the trademark owner with no intention of improperly using that trademark.

APEX, AQUA-KNOT, ARCHIVIST, BABY MAC, CASE, CD TELEMETRY, CENTRA, CRG PLUS, EAGLE, LASER SXP, LASER-LINK, MAC, MAC-LAB, MACTRODE, MARQUETTE, MARQUETTE UNITY NETWORK, MAX, MEI, MEI in the circle logo, MINNOWS, MUSE, PRESSURE-SCRIBE, RAMS, SEER, SOLAR, ST GUARD, TRAM, TRAM-NET, TRAM-RAC, TRAMSCOPE, TRIM KNOB, UNITY NETWORK, and UNITY NETWORK twist are trademarks of Marquette Electronics, registered in the United States Patent and Trademark Office.

12SL, 15SL, ADVANTAGE, AUTOSEQ, BODYTRODE, CARDIOSERV, CARDIOSMART, CARDIOSYS, CD TELEMETRY®-LAN, CENTRALSCOPE, EDIC, FLEX, HI-RES, IMAGE VAULT, INTER-LEAD, LIFEWATCH, MARQUETTE® RESPONDER, MARS, MENTOR, MRT-II, MULTI-LINK, O_2SENSOR, OnlineABG, PRES-R-CUFF, SAM, SILVERTRACE, SMART-PAC, and SMARTLOOK are trademarks of Marquette Electronics.

© 1996 Marquette Electronics, Inc. All rights reserved.

CONTENTS

1 **INTRODUCTION 1-1**

Manual Information 1-2
- Revision History 1-2
- Manual Purpose 1-3
- Chapter Content 1-3
  - Introduction 1-3
  - General Information 1-3
  - Troubleshooting 1-3
  - Calibration 1-3
  - Preventive Maintenance 1-3
  - Connections 1-3
  - Upper Assemblies 1-3
  - Acquisition Modules 1-3
  - NBP Assembly 1-3
  - PCB Assemblies 1-3
- Related Manuals 1-4
- Tech Memos 1-4
- BBS Tech Memo Service 1-4

Safety Information 1-5
- Responsibility of the Manufacturer 1-5
- Intended Use 1-5
- Equipment Symbols 1-6
- Notes, Cautions, and Warnings 1-7

Service Information 1-8
- Service Requirements 1-8
- Equipment Identification 1-8
- Warranty 1-8

How to Reach Us... 1-9
- Ordering Supply Items 1-9
- Ordering Service Parts 1-9
- Service Calls 1-9
  - Service Contracts 1-9
- Technical Support 1-10
  - For All Hardware 1-10
  - Telemetry 1-10
  - Series 3000, 7000/7010 1-10
  - 48-Hour Turnaround Repair 1-10
  - Service Address 1-10
- For Additional Information 1-10

2

GENERAL INFORMATION..... 2-1

Module Identification Chart 2-2
Tram 100A Module 2-2
Tram 200A & SL Modules 2-2
Tram 250SL Module 2-2
Tram 400A Module 2-3
Tram 450SL Module 2-3
Tram 500A Module 2-3
Tram 600A & SL Modules 2-3
Tram 650SL Module 2-4
Tram 800A & SL Module.....2-4
Tram 850A & SL Module.....2-4

System Components 2-5
What are Tram modules?.....2-5
What makes each module different from each other? 2-6
What monitors and displays connect to my Tram module? 2-7
What is a Series 70XX-Type Patient Monitor? 2-7
What is a Solar 7000 Patient Monitor?..... 2-8
What is a Solar 8000 Patient Monitor?.....2-8
What is a Tram-rac Housing? 2-9

Technical Specifications 2-10

Power Up 2-17
Insert Module 2-17
Identification 2-17
Preparation for Use.....2-17

3

TROUBLESHOOTING..... 3-1

General Fault Isolation 3-2
First Things to Ask 3-2
Visual Inspection.....3-2
Calibration 3-2

Considerations for Special Components 3-4
CMOS Components 3-4
Surface Mounted Components..... 3-5
Plastic Leaded Chip Carriers.....3-5
Flex Circuits.....3-5

Troubleshooting Procedure 3-6

Service Messages 3-9

Theory of Operation 3-10
Overall Theory 3-10
DAS Module 3-10
Acquisition Processor PCB 3-10
Isolated Power Supply PCB 3-10
Power Supply PCB 3-10
Non-Isolated Input PCB 3-11
Power Indicator PCB 3-11
Fan PCB 3-11
NBP Valve Assembly 3-11
NBP PCB 3-11
Pulse Oximetry PCB 3-12
Module Processor PCB 3-13
Versions 3-13
Overview 3-13
Main Microprocessor 3-13
Communication Controller 3-16
DEFIB SYNC Interface 3-17

4

CALIBRATION 4-1

Adjustments, Jumpers, and Switches 4-2

Power Supply PN 401309 4-3
Clock Frequency Calibration 4-3

Isolated Power Supply PCB PN 402329 4-4
+5-Volt Isolated Output Calibration 4-4

Module Processor PCB PN 800210 4-5
Switches and Jumpers 4-5
Switches for Versions 001/002 4-6
Switches for Versions 005 Only 4-7
Real-Time Clock Calibration 4-8
Battery Low Voltage Trip-Point Calibration 4-9

Acquisition Processor PCB PN 800330 4-10
Analog-to-Digital Converter Calibration 4-10

Acquisition Processor PCB PN 801040 4-11
Analog-to-Digital Converter Calibration 4-11

NBP Calibration 4-12
Accuracy 4-12
Frequency 4-12
Special Equipment/Tools 4-12
Preparation 4-13
Two Procedures 4-13
NBP Test for Tram Critical Care Monitors 4-15
NBP Test for Series 70XX Monitors 4-21

Software Update Procedure 4-22
Required Special Tools/Equipment 4-22
Interconnection 4-22
PC Setup 4-23
Generic Procedure 4-23
Completion 4-25

5

PREVENTIVE MAINTENANCE 5-1

Equipment Maintenance Program 5-3
Recommended Maintenance Schedule 5-3
Recommended Frequency 5-3

Inspection and Cleaning 5-4
Visual Inspection 5-4
Cleaning Precautions 5-4
Exterior Cleaning 5-4

Checkout Procedure 5-5
Test Frequency 5-5
Required Tools/Special Equipment 5-5
General Test 5-8
Parameter Tests 5-8
ECG Test 5-9
12SL ECG Test 5-11
Respiration Test 5-12
Blood Pressure Test 5-13
Temperature Test 5-14
Cardiac Output Test 5-15
SpO_2 Test 5-16
NBP Tests 5-18
NBP Test for Tram Critical Care Monitors 5-20
NBP Test for Series 70XX Monitors 5-24
DEFIB SYNC Test 5-25
Fan Test 5-26
Transport Test 5-26
Completion 5-26

Domestic Electrical Safety Tests 5-27
Test Frequency 5-27
Required Tests 5-27
Test Conditions 5-27

AC Line Voltage Test 5-28
120 VAC, 50/60 Hz 5-28
240 VAC, 50/60 Hz 5-28

Ground Continuity Test 5-29

Current Leakage Tests 5-30
Preparation 5-30
Required Tools/Equipment 5-30
Current Limits 5-31
Patient-Cable-Leakage to-Ground Test 5-31
Patient-Cable-Leakage-into-Patient Leads Test 5-33
Completion 5-34

Hi-Pot Tests 5-35
Preparation 5-35
Test Frequency 5-35
Required Tools/Equipment 5-35
Generator Setup 5-36
Ground Connection 5-36
High Voltage Connection 5-36
AC Hi-Pot Test 5-37
DC Hi-Pot Test 5-38

Repair Log/PM Inspection Form 5-39

6 **CONNECTIONS 6-1**

External Connectors 6-2
Blood Pressure Connector 6-2
DEFIB SYNC Signals 6-3
Display Connector 6-4
ECG/RESP Connector 6-5
Rear Connector 6-5
MEI/Nellcor SpO_2 Connector 6-7
Ohmeda SpO_2 Connector 6-8
TEMP/CO Connector 6-9

7 **TRAM 100A MODULE PN 408000 ..... 7-1**

General 7-2
Circuit Boards 7-2
Tram 100A Configurations 7-2

Exploded View PN 408000C 7-3

Schematic Diagram PN 408000C 7-5

Parts List PN 408000C 7-7

Assembly Revisions PN 408000 7-9

8 **TRAM 200A/SL MODULE PN 408001/411160 ..... 8-1**

General 8-2
Circuit Boards 8-2
Tram 200A Configurations.....8-2

Exploded View PN 408001C 8-3

Schematic Diagram PN 408001C 8-5

Parts List PN 408001C 8-8

Assembly Revisions PN 408001.....8-11

Exploded View PN 411160-001H 8-12

Schematic Diagram PN 411160-001H 8-14

Parts List PN 411160-001H 8-17

Assembly Revisions PN 411160.....8-20

9 **TRAM 250SL MODULE PN 412651 ..... 9-1**

General 9-2
Circuit Boards 9-2

Exploded View PN 412651-001H 9-3

Schematic Diagram PN 412651-001H 9-5

Parts List PN 412651-001H 9-7

Assembly Revisions PN 412651 9-10

10 **TRAM 400A/SL MODULE PN 410496/411161 ..... 10-1**

General 10-2
Circuit Boards 10-2

Exploded View PN 410496-001D 10-3

Schematic Diagram PN 410496-001D 10-4

Parts List PN 410496-001D 10-7

Tram 400A Module Assembly Revisions 10-9

Exploded View PN 411161-001J 10-10

Schematic Diagram PN 411161-001J 10-12

Parts List PN 411161-001J 10-14

Assembly Revisions PN 411161 10-17

11 **TRAM 450SL MODULE PN 412654 ..... 11-1**

General 11-2
Circuit Boards 11-2

Exploded View PN 412654-001H 11-3

Schematic Diagram PN 412654-001H 11-5

Parts List PN 412654-001H 11-7

Assembly Revisions PN 412654 11-10

12 **TRAM 500A MODULE PN 408003 ..... 12-1**

General 12-2
Circuit Boards 12-2
Tram 500A Configurations 12-2

Exploded View PN 408003C 12-3

Schematic Diagram PN 408003C 12-5

Parts List PN 408003C 12-7

Assembly Revisions PN 408003 12-9

13 **TRAM 600A/SL MODULE PN 408004/411163 ..... 13-1**

General 13-2
Circuit Boards 13-2
Tram 600A Configurations 13-2

Exploded View PN 408004C 13-3

Schematic Diagram PN 408004C 13-5

Parts List PN 408004C 13-7

Assembly Revisions PN 408004 13-9

Exploded View PN 411163-001J 13-10

Schematic Diagram PN 411163-001J 13-12

Parts List PN 411163-001J 13-14

Assembly Revisions PN 411163 13-16

14 **TRAM 650SL MODULE PN 412656 ..... 14-1**

General 14-2
Circuit Boards 14-2

Exploded View PN 412656-001H 14-3

Schematic Diagram PN 412656-001H 14-5

Parts List PN 412656-001H 14-7

ssembly Revisions PN 412656 14-9

15 **TRAM 800A/SL MODULE PN 411080/411024 ..... 15-1**

General 15-2
Circuit Boards 15-2

Exploded View PN 411080-001J 15-3

Schematic Diagram PN 411080-001J 15-5

Parts List PN 411080-001J 15-7

Assembly Revisions PN411080 15-10

Exploded View PN 411024-001J 15-12

Schematic Diagram PN 411024-001J 15-14

Parts List PN 411024-001J 15-16

Assembly Revisions PN 411024 15-19

16 **TRAM 850A/SL MODULE PN 412657/412658 ..... 16-1**

General 16-2
Circuit Boards 16-2

Exploded View PN 412657-001H 16-3

Schematic Diagram PN 412657-001H 16-5

Parts List PN 412657-001H 16-7

Assembly Revisions PN 412657 16-10

Exploded View PN 412658-001H 16-12

Schematic Diagram PN 412658-001H 16-14

Parts List PN 412658-001H 16-16

Assembly Revisions PN 412658 16-19

17 **100/200 ACQUISITION MODULE PN 408134/411166/417120 ..... 17-1**

General 17-2
Safety 17-2
Assembly Configurations 17-2

Exploded View PN 418134-001A/002A 17-3

Schematic Diagram PN 408134-001A/002A 17-4

Parts List PN 408134-001A/002A 17-5

Exploded View PN 411166-001B 17-6

Schematic Diagram PN 411166-001B 17-7

Parts List PN 411166-001B 17-8

Exploded View PN 417120-001B 17-9

Schematic Diagram PN 417120-001B 17-10

Parts List PN 417120-001B 17-11

18 **400 ACQUISITION MODULE PN 410495/411167/417121 ..... 18-1**

General 18-2
Safety 18-2
Assembly Configurations 18-2

Exploded View PN 410495-001D 18-3

Schematic Diagram PN 410495-001D 18-4

Module Parts List PN 410495-001D 18-5

Exploded View PN 411167-001C 18-6

Schematic Diagram PN 411167-001C 18-7

Parts List PN 411167-001C 18-8

Exploded View PN 417121-001B 18-9

Schematic Diagram PN 417121-001B 18-10

Parts List PN 417121-001B 18-11

19 **500/600 ACQUISITION MODULE PN 408133/411168/416122 ..... 19-1**

General 19-2
Safety 19-2
Assembly Configurations 19-2

Exploded View PN 408133-001A/002A 19-3

Schematic Diagram PN 408133-001A/002A 19-4

Parts List PN 408133-001A/002A 19-5

Exploded View PN 411168-001C 19-6

Schematic Diagram PN 411168-001C 19-7

Parts List PN 411168-001C 19-8

Exploded View PN 417122-001B 19-9

Schematic Diagram PN 417122-001B 19-10

Parts List PN 417122-001B 19-11

20 **800 ACQUISITION MODULE PN 411068/411025/417123/417124 ..... 20-1**

General 20-2
Safety 20-2
Assembly Configurations 20-2

Exploded View PN 411068-001C 20-3

Schematic Diagram PN 411068-001C 20-4

Parts List PN 411068-001C 20-5

Exploded View PN 411025-001C 20-6

Schematic Diagram PN 411025-001C 20-7

Parts List PN 411025-001C 20-8

Exploded View PN 417123-001B/417124-001B 20-9

Schematic Diagram PN 417123-001B/417124-001B 20-10

Parts List PN 417123-001B/417124-001B 20-11

21 **NBP VALVE ASSEMBLY PN 416153 ..... 21-1**

General 21-2

Exploded View PN 416153-001A 21-3

Exploded View PN 413021-001B/404459-001C 21-4

Parts List PN 413021-001B/404459-001C 21-5

22 **POWER SUPPLY ASSEMBLY PN 401309 ..... 22-1**

Parts Location Diagram PN 401309-002J 22-2

Parts List PN 401309-002J 22-3

Schematic Diagram PN 401309-001F 22-5

23 **NON-ISOLATED INPUT PCB PN 401315 ..... 23-1**

Parts Location Diagram PN 401315-003D 23-2

Parts List PN 401315-003D 23-3

Schematic Diagram PN 401315-003D 23-4

24 **ISOLATED POWER SUPPLY PN 402329 ..... 24-1**

Parts Location Diagram PN 402329-002N 24-2

Parts List PN 402329-002N 24-3

Schematic Diagram PN 402329-002N 24-5

25 **POWER INDICATOR PCB PN 403170/800006 ..... 25-1**

Parts Location Diagram PN 403170-008B/009A/011A 25-2

Parts List PN 403170-008B/009A/011A 25-3

Schematic Diagram PN 403170-008B/009A/011A 25-4

Parts Location Diagram PN 800006-001D 25-5

Parts List PN 800006-001D 25-6

Schematic Diagram PN 800006-001D 25-7

26 **FAN ASSEMBLY PN 403549 ..... 26-1**

Parts Location Diagram PN 403549-002F 26-2

Parts List PN 403549-002F 26-3

Schematic Diagram PN 403549-003B 26-4

27 **MODULE PROCESSOR PCB PN 800210 ..... 27-1**

General 27-2

Parts Location Diagram PN 800210-005B 27-3

Parts List PN 800210-005B 27-4

Schematic Diagram PN SD800210-002B 27-7

Assembly Revisions PN 800210.....27-27

Parts List PN 800210-001E/002B 27-28

Schematic Diagram PN SD800210-001C 27-31

28 **NBP PCB PN 4800316 ..... 28-1**

General 28-2

Parts Location Diagram PN 800316-002A 28-3

Parts List PN 800316-002A 28-5

Schematic Diagram PN SD800316-002A 28-7

Parts Location Diagram PN 800316-001C 28-9

Parts List PN 800316-001C 28-10

Schematic Diagram PN SD800316-001C 28-12

29 **ACQUISITION PROCESSOR PCB PN 801040/800330 ..... 29-1**

General 29-2

Parts Location Diagram PN 801040-001A/002A 29-3

Parts List PN 801040-001A/002A 29-5

Schematic Diagram PN SD801040-001A 29-7

Assembly Configurations PN800330.....29-19

Parts Location Diagram PN 800330B 29-20

Parts List PN 800330B 29-22

Schematic Diagram PN SD800330-001B 29-24

30 **PULSE OXIMETRY PCB PN 800674/401198 ..... 30-1**

General 30-2

Exploded View PN 414409-001B 30-3

Parts List PN 414409-001C 30-4

Parts Location DiagramPN 800674-003A 30-5

Parts List PN 800674-003A 30-7

Schematic DiagramPN SD800674-003A 30-10

Assembly Revisions PN 800674 30-19

Parts Location Diagram PN 800674-001A/002B 30-20

Parts List PN 800674-001A/002B 30-22

Schematic Diagram PN SD800674-002A 30-25

1 INTRODUCTION

Manual Information **1-2**
Revision History 1-2
Manual Purpose 1-3
Chapter Content 1-3
Introduction 1-3
Equipment Overview 1-3
Maintenance 1-3
Troubleshooting 1-3
Calibration 1-3
Configuration 1-3
Upper Assembly 1-3
Related Manuals 1-4
Tech Memos 1-4
BBS Tech Memo Service 1-4

Safety Information **1-5**
Responsibility of the Manufacturer 1-5
Intended Use 1-5
Equipment Symbols 1-6
Notes, Cautions, and Warnings 1-7

Service Information **1-8**
Service Requirements 1-8
Equipment Identification 1-8
Warranty 1-8

How to Reach Us... ..... **1-9**
Ordering Supply Items 1-9
Ordering Service Parts 1-9
Service Calls 1-9
Service Contracts 1-9
Technical Support 1-10
For All Hardware 1-10
Telemetry 1-10
Series 3000, 7000/7010 1-10
48-Hour Turnaround Repair 1-10
Service Address 1-10
For Additional Information 1-10

Manual Information

Revision History

Each page of this manual has a revision letter, located at the bottom of the page, that identifies its update level. This may be important if you have different updates to a manual and don't know which is the most current.

For the initial release, all pages have the revision letter A. For the first update of the manual, any changed pages receive the revision letter B. For the second update, any changed pages receive the revision letter C. The latest letter of the alphabet added corresponds to the most current revision. Notice, however, that some pages may skip revision letters, for example, jump from revision A to revision C because they did not change in revision B.

Table 8-1. Revision History

Revision	Manual PN	Date	Comment
A	404422-065	13 August 1992	Initial release of this manual for Tram 100-800
B	404422-065	3 February 1994	Updated assemblies and PCBs to latest revision
C	404422-065	15 December 1994	Incorporated Tram X50 modules
D	404422-065	8 December 1995	Added new version of processor PCB
E	404422-065	1 May 1996	Incorporated changes to data acquisition and NBP PCBs
E	404422-065	14 June 1996	Added new version of pulse oximetry PCB

Manual Purpose

This manual supplies technical information for service representative and technical personnel so they may maintain the equipment to the assembly level. Use it as a guide for maintenance and electrical repair considered field repairable.

Users of this manual are expected to have a strong background in electronics, including analog and digital circuity with microprocessor and micro-controller architecture.

Chapter Content

This manual is organized into thirty chapters, summarized as follows:

Introduction

Chapter one describes the service manual and chapter contents and provides general information on safety, service requirements, equipment symbols, and serial number identification.

General Information

Chapter two gives a description of the equipment and provides a detailed list of technical specifications.

Troubleshooting

Chapter three contains general fault information, troubleshooting procedure, and theory of operation.

Calibration

Chapter four explains how and when to adjust the equipment. It also provides information about jumper and switch settings for the pcb assemblies.

Preventive Maintenance

Chapter five describes how to maintain the equipment and keep it in good working order with a recommended maintenance schedule, cleaning guidelines, checkout procedure, and safety tests.

Connections

Chapter six describes how the Tram modules connects to other devices and describes the signals on the modules' connectors.

Upper Assemblies

Chapters seven through 16 make up the upper level assemblies part of this manual. Each of these sections describes one of the Tram 100-850 A and SL modules. Each chapter lists the parts that comprise the selected Tram module, shows exploded views to assist you in assembly, disassembly, and parts replacement, and provides an interconnection diagram that shows which signals go between the electronic parts of the assembly.

Acquisition Modules

Chapters 17 through 20 make up the acquisition modules part of this manual. Each chapter lists the parts that comprise the selected data acquisition module, shows exploded views to assist you in assembly, disassembly, and parts replacement, and provides an interconnection diagram that shows which signals go between the electronic parts of the assembly.

NBP Assembly

Chapter 21 describes the assembly that contains the noninvasive blood pressure pumps and solenoids. This chapter lists the parts that comprise the assembly, shows exploded views to assist you in assembly, disassembly, and parts replacement.

PCB Assemblies

Chapters 22 through 30 make up the pcb assemblies part of this manual. Each chapter lists the parts that comprise the selected pcb assemblies, parts location, and schematic diagrams to assist you in parts replacement and troubleshooting to a component level. Updated data describing revisions to the circuit boards and major assemblies is also included, if applicable.

Related Manuals

Check these documents if you need additional information on the Solar Patient Monitoring system.

Table 8-2. Service Documents

Part Number	Name
404422-052	Tram 100-600 Hybrid Reference Manual
404183-094	Tramscope 12 Monitor Service Manual
404183-048	Tramscope 12C Monitor Service Manual
414993-001	Solar 7000/8000 Field Service Manual
414993-007	Solar 7000/8000 Data Manual
404183-096	Tram-rac Housing Service Manual
404183-150	Modular Monitor Accessories Service Manual
403799-010	Tram Critical Care Monitoring System Mounting Reference Guide
403799-016	Tram X00 Modules/Eagle Monitor Termination Instructions for BP, CO, and Temp Cables

Table 8-3. Operator Documents

Part Number	Name
404422-103	Tram Smart-pac Display Operator's Manual
404183-176	Tram Critical Care Monitor Operator's Manual
414993-031	Solar 7000/8000 Patient Monitor Operator's Manual
403799-023	Marquette Unity Network User's Manual

Tech Memos

Marquette Service issues technical memos that aid service personnel in servicing and maintaining the equipment. Tech Memos supply important information about changes to the equipment, typical problems, and how to solve those problems. Tech Memos are also written to describe hardware and software upgrades.

Tech Memos are automatically distributed to all Marquette Field Service personnel, and are available to customers by subscription. Contact Technical Support for more information or to subscribe. For the address or telephone number, see the "How to Reach Us..." pages presented later in this manual.

BBS Tech Memo Service

Designed primarily for biomedical technicians, the BBS Tech Memo Service provides "instant" on-line access to the latest MEI maintenance and repair information. Subscribers with an IBM or IBM-compatible computer and modem can link-up to the MEITIS system and download technical publications as well as send and receive messages from technical support representatives. Call Service Contracts at 800-552-3248 for subscription information.

Safety Information

Responsibility of the Manufacturer

Marquette Electronics, is responsible for the effects of safety, reliability, and performance only if:

- Assembly operations, extensions, readjustments, modifications, or repairs are carried out by persons authorized by Marquette.
- The electrical installation of the relevant room complies with the requirements of the appropriate regulations.
- The equipment is used in accordance with the instructions for use.

Intended Use

This device is intended for use under the direct supervision of a licensed health care practitioner.

To ensure patient safety, use only parts and accessories manufactured or recommended by Marquette Electronics.

Contact Marquette Electronics for information before connecting any devices to this equipment that are not recommended in this manual.

Equipment Symbols

The following symbols appear on the equipment.

NOTE: Some symbols may not appear on all equipment.

ATTENTION: Consult accompanying documents before using the equipment.

In Europe, this symbol means dangerous or high voltage. In the United States, this symbol represents the caution notice below: To reduce the risk of electric shock, do NOT remove cover (or back). Refer servicing to qualified personnel.

Defibrillator-proof type CF equipment; type CF equipment is specifically designed for applications where a conductive connection directly to the heart is established. The paddles indicate the equipment is defibrillator proof.

Defibrillator-proof type BF equipment; type BF equipment is specifically designed for applications intentional external and internal application to the patient, excluding direct cardiac application. Type BF equipment is type B equipment with an F-type isolated (floating) part. The paddles indicate the equipment is defibrillator proof.

Type B equipment; type B equipment is suitable for intentional external and internal application to the patient, excluding direct cardiac application.

Equipotentiality

Alternating current (AC)

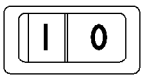

Power; **I** = ON; **O** = OFF

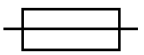

Fuse

Indicates where to press to open the door on the Series 7160 Direct Digital Writer.

Notes, Cautions, and Warnings

Notes, cautions, and warnings are used in this manual to provide additional information to service personnel.

NOTE
A note conveys special instructions to service personnel to highlight an operating procedure, practice, etc. Notes may precede or follow the applicable text, depending on the material to be highlighted.

CAUTION
The purpose of a caution is to inform service personnel of an operating procedure, practice, etc., which if not strictly observed, could result in possible damage to the equipment. Cautions always precede the applicable text.

WARNING
A warning provides instructions to service personnel that if an operating procedure, practice, etc., is not followed, personal injury may result. Warnings always precede the applicable text.

Service Information

Service Requirements

Follow the service requirements listed below.

- Refer equipment servicing to Marquette Electronic's authorized service personnel only.
- Any unauthorized attempt to repair equipment under warranty voids that warranty.
- It is the user's responsibility to report the need for service to Marquette Electronics or to one of their authorized agents.
- Failure on the part of the responsible individual, hospital, or institution using this equipment to implement a satisfactory maintenance schedule may cause undue equipment failure and possible health hazards.
- Regular maintenance, irrespective of usage, is essential to ensure that the equipment will always be functional when required.

Equipment Identification

Every Marquette Electronics device has a unique serial number for identification. The serial number appears on the product label on the base of each unit under the Trim knob control.

D 1 XX 0005 G XX

Month Manufactured
A = January
B = February
C = March
D = April
E = May
F = June
G = July
H = August
J = September
K = October
L = November
M = December

Year Manufactured
1 = 1991
2 = 1992
3 = 1993
(and so on)

Product Code
Two-character product descriptor

Product Sequence Number
Manufacturing number (of total units manufactured.)

Division
F = Cardiology
G = Monitoring

Device Characteristics
One or 2 letters that further describe the unit, for example:
P = prototype not conforming to marketing specification
R = refurbished equipment
S = special product documented under Specials part numbers
U = upgraded unit

Warranty

1 year.

How to Reach Us…

The following are telephone numbers and addresses for contacting various Marquette Electronics Service and Supplies Division personnel.

Ordering Supply Items

Supply items are generally items used during normal operation of a product. Leadwires, electrode paste, patient cables, and printer paper are examples of supply items.

Make telephone inquiries about supply items at:

1-800-558-5102

Address orders or inquiries to:

Marquette Electronics Service and Supplies
P.O. Box 9100
100 Marquette Drive
Jupiter, FL 33468-9100
Attn: Supplies

Ordering Service Parts

Service parts are items that are not expended in the normal operation of the product. They are generally replacements for defective or malfunctioning items inside the product. Service parts include PCB assemblies, electronic components, internal cables and harnesses, software or firmware, and operator and service manuals. When ordering additional operator manuals, remember to notate the software version from the start-up screen.

A part number for the item to be replaced is necessary for ordering a service part. If the part number for the desired item is unobtainable, the following will be necessary to order the item:

- model and serial number of the equipment,
- part number/name of the assembly where the item is used,
- item name, and
- where applicable, reference designation (eg, R13, S12, U32).

Service Calls

To open a service call with Marquette Electronics Service, contact a Service Dispatcher at:

1-800-558-7044 (U.S. only)

1-407-575-5000 (outside the U.S.)

Service Contracts

For any questions about Service Contracts, contact the service contract operator at:

1-800-552-3248

Technical Support

Technical Support has the most current information about your equipment and can provide assistance with any technical questions or problems.

For All Hardware

For technical advice concerning any equipment in your Marquette Electronics monitoring system, contact Tech Support—Monitoring Hardware at:

1-800-558-7822

Telemetry

For technical advice concerning your Telemetry system, contact Tech Support—Telemetry at:

1-800-552-3243

Series 3000, 7000/ 7010

For technical advice concerning Series 3000, 7000/7010 patient monitoring equipment, contact Tech Support:

1-800-443-0980

48-Hour Turnaround Repair

Some Marquette products (Input Modules, Tram modules, Series 7700 ECG Telemetry Transmitters, and CD Telemetry Transmitters) are repaired on a 48-hour turnaround basis.

To inquire about status of 48-hour turnaround repair items, or if you have questions before shipping an assembly to be repaired, call:

1-800-552-3243

Service Address

Send items for 48-hour repair and all monitoring repair items to:

Marquette Electronics Service and Supplies
P.O. Box 9100
100 Marquette Drive
Jupiter, FL 33468-9100
Attn: Monitoring Repair

For Additional Information

The main switchboard operator will direct your call to the person most able to assist you. For any other questions or problems, contact the main switchboard operator at:

1-800-558-5120

2 GENERAL INFORMATION

Module Identification Chart **2-2**
Tram 100A Module 2-2
Tram 200A & SL Modules 2-2
Tram 250SL Module 2-2
Tram 400A Module 2-3
Tram 450SL Module 2-3
Tram 500A Module 2-3
Tram 600A & SL Modules 2-3
Tram 650SL Module 2-4
Tram 800A & SL Module 2-4
Tram 850A & SL Module 2-4

System Components **2-5**
What are Tram modules? 2-5
What makes each module different from each other? 2-6
What monitors and displays connect to my Tram module? 2-7
What is a Series 70XX-Type Patient Monitor? 2-7
What is a Solar 7000 Patient Monitor? 2-8
What is a Solar 8000 Patient Monitor? 2-8
What is a Tram-rac Housing? 2-9

Technical Specifications **2-10**

Power Up **2-17**
Insert Module 2-17
Identification 2-17
Preparation for Use 2-17

Module Identification Chart

Many different module assemblies are available and many have had label changes for the same module. Below is a chart to help match the module assembly visually with its proper part number. The left column will show the different module fronts for each module type described in this manual. The right column will give all part numbers for easy access in this manual.

Tram 100A Module

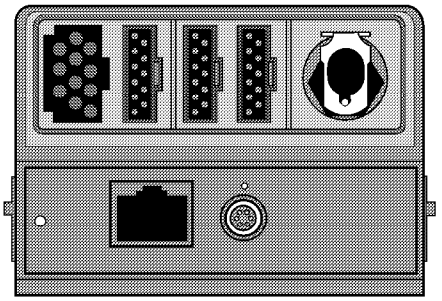

Tram 100A Module PN 408000-001 through 408000-018
Refer to Chapter 7 for more details.

Tram 200A & SL Modules

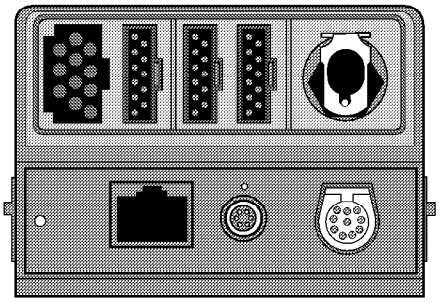

Tram 200A Module PN 408001-001 through 408000-018
Refer to Chapter 8 for more details.

Tram 200SL Module PN 408001-001
Refer to Chapter 8 for more details.

NOTE
The two modules listed above use a pulse oximetry PCB manufactured by Ohmeda, Inc.

Tram 250SL Module

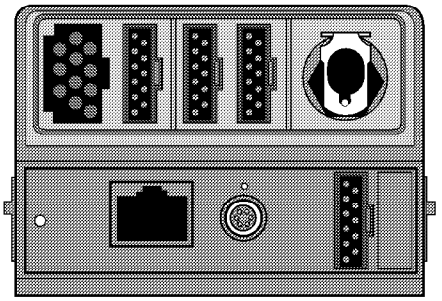

Tram 250SL Module PN 412651-001
Refer to Chapter 9 for more details.

Tram 400A Module

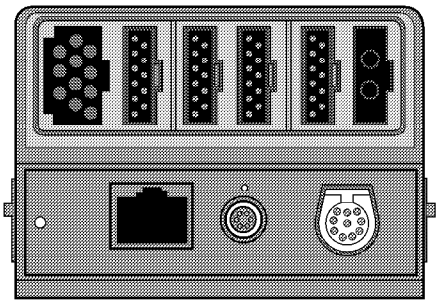

Tram 400A Module PN 408975-001
Refer to Chapter 10 for more details.

Tram 400SL Module PN 411161-001
Refer to Chapter 10 for more details.

NOTE
The two modules listed above use a pulse oximetry PCB manufactured by Ohmeda, Inc.

Tram 450SL Module

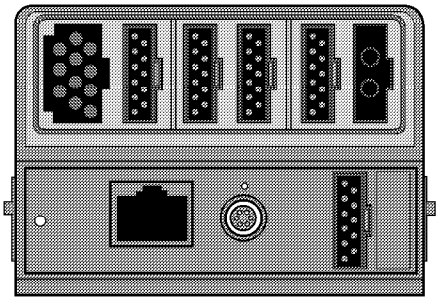

Tram 450SL Module PN 412654-001
Refer to Chapter 11 for more details.

Tram 500A Module

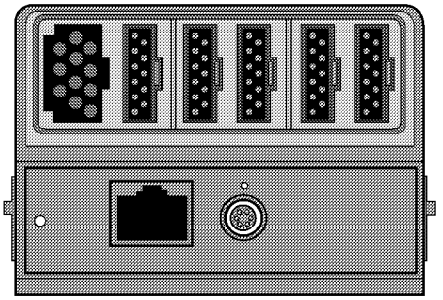

Tram 500A Module PN 408003-001 through 408003-018
Refer to Chapter 12 for more details.

Tram 600A & SL Modules

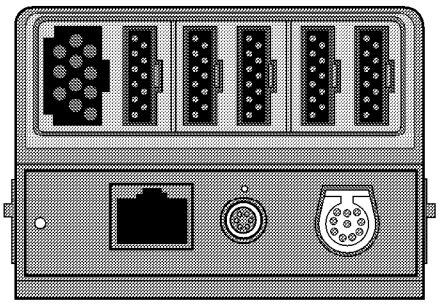

Tram 600A Module PN 408004-001 through 408003-018
Refer to Chapter 13 for more details.

Tram 600SL Module PN 411163-001
Refer to Chapter 13 for more details.

NOTE
The two modules listed above use a pulse oximetry PCB manufactured by Ohmeda, Inc.

Tram 650SL Module

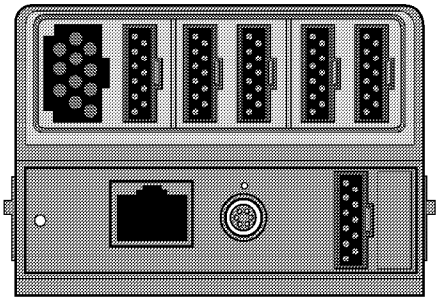

Tram 650SL Module PN 412656-001
Refer to Chapter 14 for more details.

Tram 800A & SL Modules

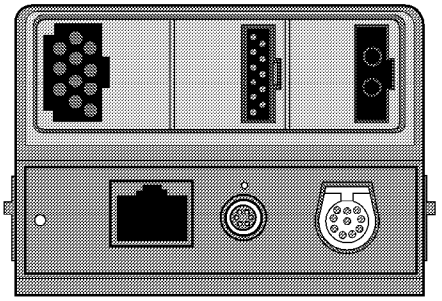

Tram 800A Module PN 411080-001
Refer to Chapter 15 for more details.

Tram 800SL Module PN 411024-001
Refer to Chapter 15 for more details.

NOTE
The two modules listed above use a pulse oximetry PCB manufactured by Ohmeda, Inc.

Tram 850A & SL Modules

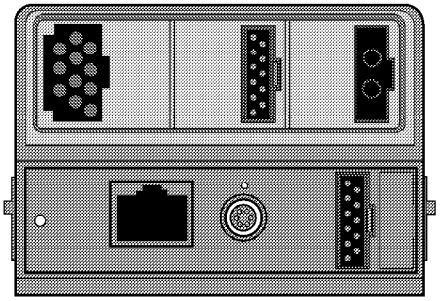

Tram 850A Module PN 412657-001
Refer to Chapter 16 for more details.

Tram 850SL Module PN 411658-001
Refer to Chapter 16 for more details.

System Components

What are Tram modules?

The Tram 100-850 A and SL modules are plug-in/pull-out modules used in Marquette monitoring systems and transport displays. The Tram 100-850 A and SL modules (hereafter referred to, collectively, as Tram modules) collect data from a patient, convert the data to a digital form for processing and send the data to a bedside or surgical monitor, or a transport display for further processing and display. The data that a Tram module collects, converts and sends includes the patient's vital signs and physiological waveforms.

The Tram module also stores a patient history including trends and special events, and setup information like blood pressure zero points and alarm limit settings. The patient history is stored so that when a patient is transferred to a different monitor, the collected information is transferred with them.

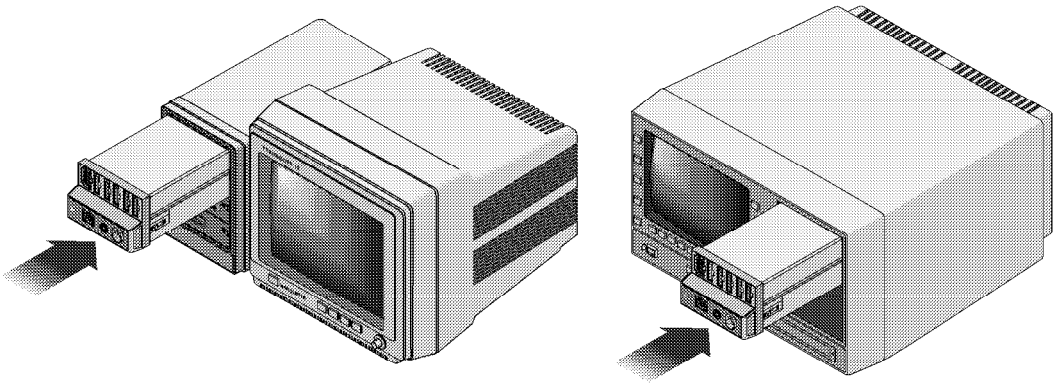

The following modules are *not* described in this manual and have their own service manual.

Table 2-1. Other Module Service Manuals

Module	Part Number
BP/CO/Temperature Input Modules	403798-005
ABG Module	412383-003
Pulse Oximetry Module	700-9573-002
Solar ECG Module	414993-032
Solar SpO_2 Module	414993-033
NBP Module	414993-059
SVO_2 Module	403798-007

What makes each module different from each other?

Each series, or model, of Tram module monitors a different set of vital signs. This table lists the vital signs monitored by each model.

Table 2-2. Types of Modules

Module Series	ECG Leadwires	RESP	NBP	SpO2	CO	TEMPs	Inv BPs
Tram 100A	5	•	•		•	2	2
Tram 200A	5	•	•	•†	•	2	2
Tram 200SL	10	•	•	•†	•	2	2
Tram 250SL	10	•	•	•	•	2	2
Tram 400A	5	•	•	•†	•	2	3
Tram 400SL	10	•	•	•†	•	2	3
Tram 450SL	10	•	•	•	•	2	3
Tram 500A	5	•			•	2	4
Tram 600A	5	•		•†	•	2	4
Tram 600SL	10	•		•†	•	2	4
Tram 650SL	10	•		•	•	2	4
Tram 800A	5	•	•	•†	•	2	0
Tram 800SL	10	•	•	•†	•	2	0
Tram 850A	5	•	•	•	•	2	0
Tram 850SL	10	•	•	•	•	2	0

† The pulse oximetry connector on this Tram module is only compatible with Ohmeda manufactured probes.

What monitors and displays connect to my Tram module?

The displays and monitors listed below supply the Tram module with power, and they show the vital signs and waveforms that the Tram module collects and stores. You may use the Tram module with one of the following devices.

- Series 7005 monitor
- Series 7010 monitor
- Series 7010RA monitor
- Series 7000 or 7000RA monitor that has been modified to be Tram-compatible
- Tram Critical Care monitor (a Tramscope or Solar display equipped with any of the Tram-rac housings)
- Series 7200 Tram transport display fitted with a Smart-pac battery backpack
- Smart-pac transport display

What is a Series 70XX-Type Patient Monitor?

A Series 70XX-type patient monitor includes a Series 7000, 7000RA, 7005, 7010, or 7010RA monitor. It is an intelligent terminal, containing the display, all of the user controls, and processors to communicate with patient monitor peripherals and analyze patient data. It is capable of displaying up to four different waveforms at one time. Modules are inserted directly into the monitor housing.

Shown below is a Series 7010 patient monitor.

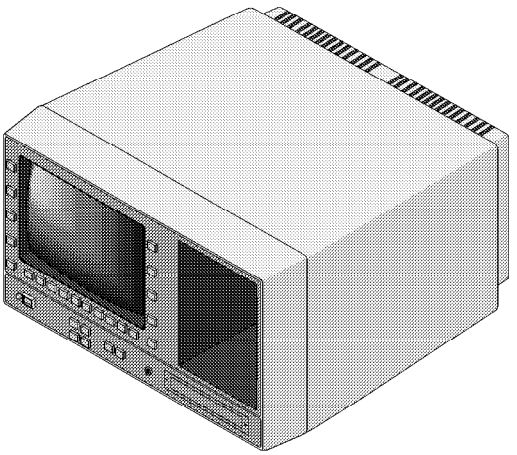

What is a Solar 7000 Patient Monitor?

One Solar based patient monitor used with the input modules is the Solar 7000 patient monitor. It is an intelligent terminal, containing the display, all of the user controls, and processors to communicate with patient monitor peripherals and analyze patient data. It is capable of displaying up to six or eight different waveforms at one time. System software may be updated by a laptop computer at the monitor or through the Marquette Unity Network using a central station.

Shown below is a Solar 7000 patient monitor.

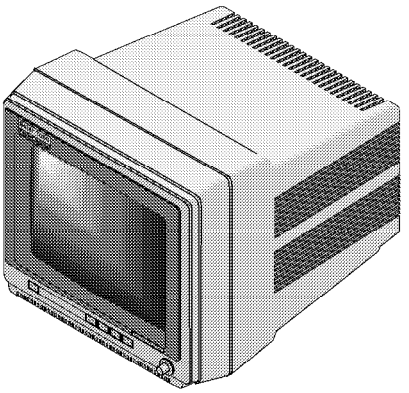

What is a Solar 8000 Patient Monitor?

The Solar 8000 patient monitor system consists of a Solar 8000 processing unit with a compatible display purchased from Marquette Electronics or another vendor. The processing unit is the center of the Solar 8000 patient monitoring system. It provides the user controls, processors to communicate with patient monitor peripherals, and analyzes patient data. It is capable of displaying up to six or eight different waveforms at one time on the compatible 12, 15, 17, or 19-inch display. System software may be updated using a laptop computer connected to the Solar 8000 processing unit or through the Marquette Unity Network using a central station.

Shown below is a generic display and a Solar 8000 processing unit.

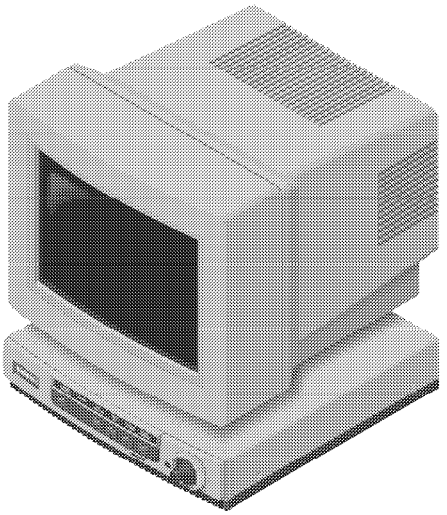

What is a Tram-rac Housing?

The Tram-rac housing (remote acquisition case) acquires patient data for the patient monitor. *The Tram-rac Housing Service Manual*, pn 404183-096, has more information.

Shown below is a Tram module inserted in a Tramscope monitor with a Tram-rac 4A housing.

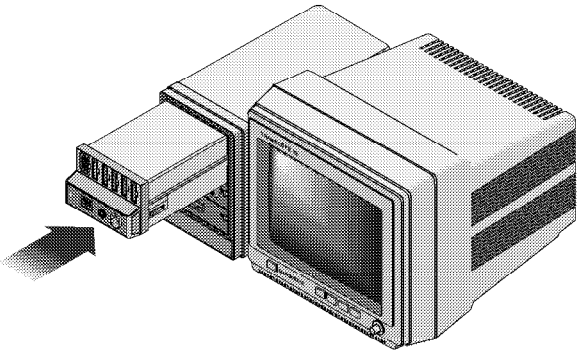

Technical Specifications

Table 2-3. Physical Specifications for All Tram Modules

Item	Description
Height	8.1 cm (3.2 in)
Width	11.4 cm (4.5 in)
Depth	29.5 cm (11.6 in)
Weight	2.1 kg (4.7 lb)
Interface	Used with Tramscope or Solar monitors

Table 2-4. Environmental Specifications for All Tram Modules

Item	Description
Power requirements	16.5 VDC
Power consumption	10 watts (module alone)
Cooling	Forced air
Heat Dissipation	34 BTU
Operating conditions ■ Ambient temperature ■ Relative humidity	 10˚C to 35˚C (50˚F to 95˚F) 40% to 95% (noncondensing)
Storage conditions ■ Temperature ■ Relative humidity	 –10˚C to 50˚C (14˚F to 122˚F) 0 to 95% (non-condensing))

Table 2-5. Processing

Item	Description
Main processor	Motorola 68000, 16/32 bit, 14.75 MHz
Input/output	Intel 80C152, 8 bit, 14.75 MHz
Data acquisition	Intel 80C152, 8 bit, 14.75 MHz
SpO_2 processor	Intel 80C196, 8 bit, 7.3 MHz

Table 2-6. ECG Parameter for All Trams for All Tram Modules

Item	Description
Standard leads available ■ Tram 100A, 200A, 400A, 500A, 600A, and 800A modules: ■ Tram 200SL, 400SL, 600SL, and 800SL modules:	 I, II, III, V, aVR, aVL, and aVF I, II, III, V1, V2, V3, V4, V5, V6, aVR, aVL, and aVF
Leads analyzed simultaneously	Four (I, II, III, and V)
Heart rate detection range	30 to 300 beats/min
QRS detection range	0.5 mV to 5 mV
Signal width	40 ms to 120 ms (Q to S)
Common mode rejection	90 dB min
Frequency response ■ OR ■ Neonate ■ Adult	 0.05 Hz to 25 Hz 0.5 Hz to 40 Hz 0.05 Hz to 100 Hz
Pacemaker detection/rejection ■ Input voltage range ■ Input pulse width ■ Rise time ■ Over/under shoot ■ Baseline drift	 ±2 mV to ±700 mV 0.1 ms to 2 ms 10 µs to 100 µs 2 mV (max) <0.5 V with a ±700 mV, 2 ms pacemaker pulse applied
Lead fail	Identifies failed lead and switches to intact one
Analog output	Selectable @ 1 V/mV
Trends	24 hours with 1-minute resolution

Table 2-7. Respiration Parameter for All Modules	
Item	**Description**
Rate range	1 to 200 breaths/minute
Impedance range	100 to 1000 ohms at ±52.6 kHz
Detection sensitivity range	0.4 to 10 ohms impedance variation
Low rate alarm range	1 to 199 breaths/min
High rate alarm range	2 to 200 breaths/minute
Apnea alarm rate	0 to 30 seconds in one-second increments
Cardiac artifact alarm	
Waveform display bandwidth	0.05 Hz to 2.5 Hz (–3 dB)
Analog output	Selectable
Trends	24 hours with 1-minute resolution

Table 2-8. Invasive Blood Pressure Parameter for All Tram Modules Except Tram 800 and 850 Modules	
Item	**Description**
Catheter sites	Arterial, pulmonary arterial, central venous, left arterial, intracranial, right arterial, femoral arterial, umbilical venous, umbilical arterial, and special.
Accuracy	2% ±1 mmHg (exclusive of transducer)
Measurement range ■ Arterial ■ All other sites	 –98 to 350 mmHg –98 to 350 mmHg
Zero balance range	±150 mmHg offset
Zero balance accuracy	±1 mmHg
Transducer excitation	±2.5 VDC
Transducer sensitivity	50 µV/V/cmHg
Waveform frequency response	0 Hz to 12 Hz or 0 Hz to 40 Hz (–3 dB) user-selectable
Analog output	Selectable, 1 V/100 mmHg
Trends	24 hours with 1-minute resolution

Table 2-9. Temperature Parameter for All Tram Modules

Item	Description
Number of channels	2
Probe type	YSI Series 400 or 700
Range	0˚C to 45˚C (32°F to 113°F)
Gain	121.95 ±1%
Linearity	<1% from 30˚C to 42˚C
DC drift	<1 mV/˚C
Error: ▪ YSI series 400 probes ▪ YSI series 700 probes	(Independent of source) ±0.1°C ±0.3°C
Noise	<20 mV from DC to 100 Hz
Alarms	User-selectable upper and lower limits for T1, T2
Resolution	±0.2°C
Displayed parameters	Temperature 1, Temperature 2
Trends	24 hours with 1-minute resolution

Table 2-10. Pulse Oximetry Parameter for All Tram Modules Except Tram 100 and 500 Modules

Item	Description
Saturation range	0 to 100%
SpO_2 Accuracy ■ 90% to 100% ■ 80% to 89.9% ■ 60% to 100% ■ Below 60%	 1.5% 2.1% 2.4% (overall range) Unspecified
Pulse rate range	40 to 235 beats/minute
Pulse rate accuracy	±1.7% of current reading (assumes constant pulse rate)
Displayed frequency response	1.5 to 10.5 Hz
Alarm limit range ■ SpO_2 ■ Pulse	 1% to 105% 40 to 235 beats/min
Displayed parameters	Oxygen saturation, pulse rate
Trends	24 hours with 1-minute resolution
Analog output	Selectable waveform
Analog output	Selectable saturation 0 to 100% equivalent 0 to 1 V
Messages sent to display	Interference Detected, Low Light, Check Probe, Low Signal Quality, Probe Off Patient, Replace Bad Probe, Service the Module

Table 2-11. Non-Invasive Blood Pressure Parameter for All Tram Modules Except Tram 500, 600, and 650 Modules

Item	Description
Measurement technique	Oscillometric
Displayed parameters	Systolic, diastolic, and mean pressures; time of last measurement, cuff size, countdown to next measurement
Cuff inflation rate	25 mmHg/sec (nominal)
Cycle time	Typically 20 to 40 sec (dependent on heart rate)
Maximum inflation pressure ■ Adult ■ Neonatal	 300 mmHg 150 mmHg
Heart rate detection	30 to 300 beats/minute
Measurement modes	Manual, auto, and stat. Stat mode is 5 minutes of continuous measurements.
Trends	96 stored events saved a maximum of 24 hours
Cuff sizes: ■ Disposable	 Large adult (33 cm to 47 cm), adult (25 cm to 35 cm), small adult (18 cm to 26 cm), small pediatric (6 cm to 17 cm), infant (5 cm to 15 cm) and neonates (3 cm to 6 cm, 4 cm to 8 cm, 6 cm to 11 cm, 7 cm to 13 cm, and 8 cm to 15 cm)
■ Reusable	Thigh (46 cm to 66 cm), large adult (33 cm to 47 cm), adult (25 cm to 35 cm), child (18 cm to 26 cm), infant (10 cm to 19 cm) and newborn* (6 cm to 11 cm) *Requires pn 9461-205 neonatal tubing

Table 2-12. Cardiac Output Parameter for All Tram Modules

Item	Description
Cardiac output range	0.2 to 15 liters/min
Blood temperature range	30°C to 42˚C (86°F to 107°F)
Injectate temperature range	0°C to 30˚C (32°F to 86°F)
Waveform display frequency response	0 Hz to 10 Hz (–3dB)
Displayed parameters	Cardiac output, blood temperature, injectate temperature, trial number
Injectate volume	3, 5, or 10 cc

Table 2-13. Certification for All Tram Modules	
Item	**Description**
Safety limits and performance standards	Meets the requirements of ANSI/AAMI ES1
Safety standards	UL 544 listed CSA No. 125 certified IEC 601-1 certified

Table 2-14. Classification for All Tram Modules	
Item	**Description**
Type of protection against electrical shock	Not applicable
Degree of protection against electrical shock	Type CF equipment
Degree of protection against harmful ingress of water	Ordinary Equipment (enclosed equipment without protection against ingress of water)
Degree of safety of application in the presence of a flammable anesthetic moisture with air or with oxygen or nitrous oxide	Equipment not suitable for using the presence of a flammable anesthetic moisture with air or with oxygen or nitrous oxide.
Method(s) of sterilization or disinfection recommended by the manufacturer	Not applicable
Mode of operation	Continuous operation

Power Up

Insert Module

Insert the module in the top slot of a Tram-rac 4 housing or Series 70XX-type.

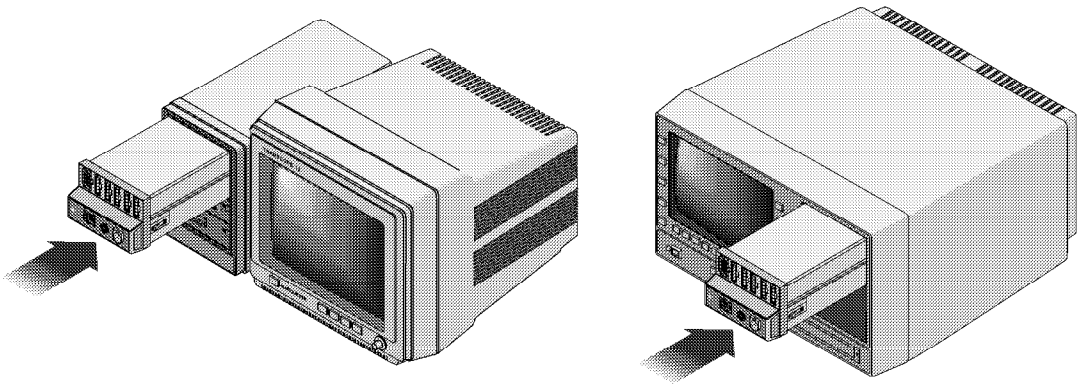

1. Connect appropriate parameter cables
2. Apply power to the monitor. If your Tram-rac housing has its own power supply, apply power to it, too.
3. Ensure POWER indicator on the Tram module's front panel is turned ON.

Identification

After inserting the module, the module should also identify itself on the monitor screen with a patient parameter box.

If the module does not identify itself on the screen, refer to "Troubleshooting Procedure" in Chapter 5: "Troubleshooting."

Preparation for Use

Perform the following procedures, before presenting the module for service.

- Perform the "Checkout Procedure" provided in Chapter 4: "Preventive Maintenance."
- If the module fails any tests, refer to "Troubleshooting Procedure" in Chapter 5: "Troubleshooting."

For your notes

3 TROUBLESHOOTING

General Fault Isolation **3-2**
First Things to Ask 3-2
Visual Inspection 3-2
Calibration 3-2

Considerations for Special Components **3-4**
CMOS Components 3-4
Surface Mounted Components 3-5
Plastic Leaded Chip Carriers 3-5
Flex Circuits 3-5

Troubleshooting Procedure **3-6**

Service Messages **3-9**

Theory of Operation **3-10**
Overall Theory 3-10
DAS Module 3-10
Acquisition Processor PCB 3-10
Isolated Power Supply PCB 3-10
Power Supply PCB 3-10
Non-Isolated Input PCB 3-11
Power Indicator PCB 3-11
Fan PCB 3-11
NBP Valve Assembly 3-11
NBP PCB 3-11
Pulse Oximetry PCB 3-12
Module Processor PCB 3-13
Versions 3-13
Overview 3-13
Main Microprocessor 3-13
Communication Controller 3-16
DEFIB SYNC Interface 3-17

General Fault Isolation

First Things to Ask

If the unit is not working properly, save yourself some time troubleshooting by asking yourself these basic questions.

- Is the module seated correctly?
- Is the monitor and/or Tram-rac housing power cord connected?
- Is the monitor turned ON at the rear of the monitor?
- Is the display LED illuminated? Are all the communication cables firmly connected?
- Were there any changes in the use, location, or environment of the equipment that could cause the failure?
- Has the unit been modified in any way, either in software or hardware?

Is operator error the cause of the problem? Try to repeat the user's scenario exactly and compare that to the proper operation of the equipment. Check the operator's manual as necessary.

Visual Inspection

A thorough visual inspection of the equipment can save time. Small things—disconnected cables, foreign debris on circuit boards, missing hardware, loose components—can frequently cause symptoms and equipment failures that may appear to be unrelated and difficult to track.

Take the time to make all the recommended visual checks (refer to the visual inspection chart on the next page) before starting any detailed troubleshooting procedures.

Calibration

There is very little calibration required for the input modules. If a parameter does not pass the checkout procedure provided in Chapter 3: "Preventive Maintenance," refer to the individual circuit board chapters in this manual for any PCB level calibration. In most cases, the modules should be returned to the factory for service.

Table 3-1. Visual Inspection List

Area	Look for the following problems:
I/O Connectors and Cables	■ Fraying or other damage ■ Bent prongs or pins ■ Cracked housing ■ Loose screws in plugs
Interface Cables	■ Excessive tension or wear ■ Loose connection ■ Strain reliefs out of place
Circuit Boards	■ Moisture, dust, or debris (top and bottom) ■ Loose or missing components ■ Burn damage or smell of over-heated components ■ Socketed components not firmly seated ■ Solder problems: cracks, splashes on board, incomplete feedthrough, prior modifications or repairs
Ground Wires/Wiring	■ Loose wires ■ Faulty wiring ■ Wires pinched or in vulnerable position
Mounting Hardware	■ Loose or missing screws or other hardware
Power Source	■ Faulty connection between PCBs ■ Power source problems may cause static discharge, resetting problems, and noise.

WARNING
Solder multilayer and surface mount PCB assemblies at your own risk! Improper repair methods can damage the PCB assemblies even further. Only qualified service personnel with the proper laboratory equipment should attempt to repair PCB assemblies.

Considerations for Special Components

CMOS Components

This equipment contains many CMOS components, which are less susceptible to noise and consume less power than standard TTL or NMOS components. However, CMOS components are more easily damaged by electrostatic discharge (ESD) than other semiconductors.

ESD damage, usually a subtle weakening of semiconductor junctions, can range from corruption of digital memory to catastrophic system failure. Although CMOS components most frequently fail from ESD damage, no semiconductor device is completely safe from ESD damage.

The inputs and outputs of all the equipment components are protected from ESD damage during normal operation. However, during servicing, these components are exposed to several sources of static electricity, ranging from human hands to improperly grounded test equipment. For this reason, all service workstations should be as static-free as possible.

The following guidelines can help reduce ESD damage to semiconductors and assemblies with semiconductors.

- Discharge any static charge you may have built up before handling static-sensitive devices.
- Wear a grounded, anti-static wristband or heel strap.
- Use only properly grounded soldering and test equipment.
- Use a static-free surface.
- Store semiconductors and static-sensitive assemblies in an anti-static container until needed.
- Always turn off the power before removing or inserting a semiconductor.
- Do not slide semiconductors or assemblies containing semiconductors across any surface.
- Do not touch semiconductor leads unless absolutely necessary.

Surface Mounted Components

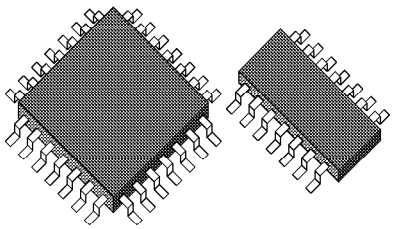

Surface mounted components are used to aid in miniaturizing the Tram 100-850 A and SL modules.

Surface mounted integrated circuits have legs that are soldered to rectangular pads on the surface of the circuit board, rather than having legs that are made to be inserted into holes that go through the circuit board. Surface mounted integrated circuits can have legs on either two or four sides of the chip.

Surface mounted resistors, capacitors, and diodes usually have no legs at all – conductive parts of their bodies are soldered directly to the circuit board.

CAUTION
Surface mounted components were not designed to be removed and replaced with standard soldering equipment. Removing a surface mounted component with a conventional soldering iron could destroy the circuit board. Special equipment is required to remove and replace these items.

Plastic Leaded Chip Carriers

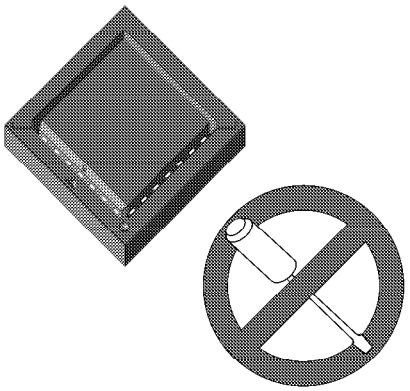

Plastic leaded chip carriers (PLCCs) are also used in the Tram 100-850 A and SL modules to aid in miniaturizing the equipment.

They are integrated circuits that have “loops” on four sides that make contact with a socket or they are soldered directly to the PCB.

CAUTION
PLCCs require special care, and some special tools when they are removed. If you attempt to remove a PLCC from its socket with a screwdriver, you are likely to damage both the PLCC and its socket. A Burndy QILEXT-1 or equivalent extractor must be used to remove a PLCC from its socket.

Flex Circuits

The Tram modules use flex circuits to route signals between pcb assemblies. Flex circuits are intended to flex very small amounts. If you force them to flex very far out of their normal range of motion, they will fail. Take extreme care not to disturb flex circuits more than is absolutely necessary when you service the Tram module, especially when removing and replacing circuit boards that are connected with flex circuits.

Troubleshooting Procedure

To use this troubleshooting procedure, read through the steps in the table until you find a similar problem to the one you are having. Do not perform any invasive procedures listed in this procedures unless you are a trained field or bio-medical engineer.

WARNING
This procedure is intended for use by service personnel with advanced troubleshooting skills. The consequences of the following steps may cause loss of patient data and disruption of the entire Marquette Unity Network.

Table 3-2. Troubleshooting Chart

Does the power indicator turn on? 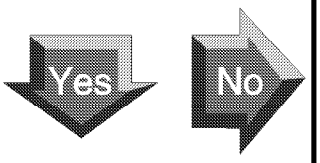	This problem has may sources, so try one or more of the following solutions. 1. If the power indicator fails to turn on, and the monitor has no communications with the Tram module, it means that power isn't making it all the way from the monitor to the module processor PCB. 2. Verify monitor is functional. Most of the time, a failure of this sort is caused by a faulty power supply PCB, pn 401309-002. Try swapping the one in your module with a known-good one.

Table 3-2. Troubleshooting Chart	
Does the diagnostic indicator turn on?	The Tram module has one diagnostic indicator: dual-color light-emitting diode DS1, located on the bottom of the module processor PCB, pn 800210-00x. It is referred to as the "I AM OK" light. Follow these steps to view the indicator in action.
	1. Remove the module cover (item 1 in the exploded views listed in chapters 7 through 16). 2. Turn the Tram module upside-down. 3. Apply power to the Tram module. The easiest way to do this is to connect a Smart-pac-equipped transport display to the front panel connector of the Tram module, but a better way is to use an extender board to connect it to a monitor.
	You can see the diagnostic indicator between the power supply PCB and the bottom chassis ground plate. Watch it while you apply power. If the Tram module is "healthy", it: ■ glows red until the communication controller on the module processor gets up and running, ■ flashes between green and red a couple of times while the main microprocessor on the module processor PCB boots, and then ■ steadily glows green until external power is removed.
	If the module runs into trouble, it's likely that one of the following is true. ■ The diagnostic indicator *never flashes* at all when the power is applied. Try replacing the module processor PCB. ■ The diagnostic indicator *stays steady red.* Sometimes the pulse oximetry PCB causes this condition. Try disconnecting it and powering the module again. If that doesn't do it, try replacing the module processor PCB. ■ The diagnostic indicator *stays flashing red/green.*
Does the fan turn on?	When you insert the module into a monitor, it tries to establish communications with the monitor. The next step, when the module's sure that it is in a monitor, and not just connected to a transport display, is to turn on its fan. If the diagnostic indicator continues to flash between red and green and: ■ the fan doesn't turn on, then the problem is probably with the module processor pcb, pn 800210-00x; or ■ the fan does turn on, then the problem is in the data acquisition module. Try replacing the offending assembly.

Table 3-2. Troubleshooting Chart	
Does the Tram Module communicate with the monitor or display?	If the Tram module is inserted in a monitor, try viewing the software revisions at the monitor. The Tram module software revision should be among the revisions listed. If it isn't, the Tram module isn't communicating with the monitor. When the Tram module doesn't communicate with a transport display, the transport display shows a COMMUNICATION FAILURE message. 1. If the Tram module communicates with a monitor, but not a transport display, ■ make sure the Tram module is plugged into the connector at the rear of the transport display (it's not supposed to work in the one on the side of the transport display), ■ if it's connected to the correct connector, suspect the non-isolated input PCB, pn 401315-002, or the flex circuit that connects it to the module processor PCB. Try testing continuity on the flex circuit or swapping the assemblies. ■ if that doesn't work, try swapping the module processor PCB, pn 800210-00x. 2. If the Tram module communicates with a transport display, but not a monitor: ■ first, try replacing the power supply PCB, pn 401309-002, then, ■ try swapping the module processor PCB, pn 800210-00x, with a known-good one. 3. If the Tram module doesn't communicate with either the transport display or the monitor, suspect the module processor PCB, pn 800210-00x.
End	This is the extent of the troubleshooting steps developed at this time.

Service Messages

Service messages are usually located in the upper left corner of the screen on the transport display when they are active. The exception to this rule is "BATTERY FAIL", which is located in the center of the screen on the transport display when it is active.

The following is a list of the possible service messages that can be encountered when using a transport display with one of the Tram modules, and what they mean.

Table 3-3. List of Service Messages

Message	Description
CALL SERVICE 25	Bus error occurred.
CALL SERVICE XX	Task Stack Overflow Error. ■ If XX<25, then XX is the number of a Tram module task for the stack overflow. ■ If XX≥50, then XX-49 is the number of a transport display task for the stack overflow.
CALL SERVICE 201	68000 microprocessor diagnostics failure.
CALL SERVICE 202	Tram module ROM checksum error during start-up.
CALL SERVICE 203	Tram module ROM checksum error during operation.
CALL SERVICE 204	Tram module RAM read/write test failure after hot start.
CALL SERVICE 205	Tram module RAM read/write test failure after cold start.
CALL SERVICE 206	Tram module RAM read/write test failure during operation.
CALL SERVICE 208	Tram module RAM battery voltage low. Replace battery BT1 on the module processor PCB, pn 800210-00x.
EVALUATION ONLY	Tram module software is an unreleased version.
LOW BATTERY	Battery capacity is under 20%.
BATTERY POWERED	The Tram module is running on battery power.
BATTERY FAIL	Smart-pac battery pack failure. This error is usually caused by one of these conditions: ■ Battery pack cell reversal detected ■ Battery pack cell over-temperature detected during charging ■ Battery pack voltage is less than 10 volts ■ Smart-pac battery backpack lost communication with batteries. ■ Try charging the Smart-pac battery pack in a Smart-pac charger.

Theory of Operation

Overall Theory

Overall theory of operation is described in the following paragraphs. Detailed theory of operation for the module processor PCB is described last.

Refer to the top level block diagram and interconnect signals in the top level assembly chapters presented later in this manual for the specific promontories described below represented in your Tram module.

DAS Module

Each Tram module contains a DAS (data acquisition) module that collects patient data for those parameters that require their electrodes, transducers, and sensors to be isolated from ground for the safety of the patient. These parameters include ECG, pressure, and temperature or cardiac output. The DAS module sends the patient data to the module processor PCB and any other devices on the Tram-net network that require real-time patient data. The DAS module also includes some of the NPB plumbing.

The DAS module contains two circuit boards:

- the isolated power supply PCB, pn 402329 (see Chapter 25), and
- the acquisition processor PCB, pn 800330/801040 (see Chapter 29).

Acquisition Processor PCB

The acquisition processor PCB performs the data acquisition functions for the isolated inputs of the Tram module. This includes:

- conditioning all ECG, invasive blood pressure, temperature, and cardiac output signals from electrodes, transducers, sensors, and probes on the patient,
- converting those signals from analog signals to digital data, and
- sending the digital data across the Tram-net to the module processor PCB for further processing.

Isolated Power Supply PCB

The isolated power supply PCB is located in the DAS module provides the acquisition processor PCB, pn 800330/801040, with power. Since the acquisition processor PCB has several direct connections with patient electrodes, transducers, etc., the power that it uses must be isolated from ground to protect the patient from potentially hazardous current leakage during defibrillation and electrosurgery. As a result, every voltage produced by this PCB is isolated from earth ground.

Power Supply PCB

The power supply PCB performs all power conversions in the Tram and supplies all of the other PCBs with the correct voltage levels. The exception to this is the acquisition processor PCB, which is powered by the isolated power supply PCB. The power supply PCB also serves as a path for signals between the module processor PCB, pn 800210, and the monitor.

Non-Isolated Input PCB

The non-isolated input PCB is a passive circuit board that passes signals between the module processor PCB, pn 800210, and the connectors for the transport display and analog output.

Power Indicator PCB

The power indicator PCB, pn 403170-009, is a passive circuit board that illuminates the power LED. The power indicator PCB, pn 403170-011, also passes signals between the pulse oximetry PCB and the SpO2 probe connector on the front panel of the Tram module.

PN 403170-009 is used in the Tram 100A/500A modules.

PN 403170-011 is used in the Tram 250SL, 450SL, 650SL, and 850A/SL modules.

Both the power indicator PCB, pn 403170-008, and the interconnect PCB, pn 800006-001, are used in the Tram 200A/SL, 400A/SL, 600A/SL, and 800A/SL modules. The interconnect PCB is a passive circuit board that simply passes signals between the Ohmeda pulse oximetry PCB and the power indicator PCB.

Fan PCB

The fan PCB regulates the power going to the fan. It also serves as a signal path between the module processor PCB and the NBP valve assembly.

NBP Valve Assembly

The NBP valve assembly is used in the Tram 100A, 200A/SL, 250SL,400A/SL, 450SL, 800A/SL, and 850A/SL modules. The NBP valve assembly contains the pressure release valves that regulates the air pressure in the non-invasive blood pressure cuff.

PN 413021-001 replaced pn 404459-001 in most Tram assemblies.

NBP PCB

This PCB interfaces the pump and solenoid valves in the noninvasive blood pressure assembly with the module processor PCB. This includes buffering pump and solenoid control signals from the module processor PCB, and returning NBP status information to the module processor PCB. Note that all signals between the NBP PCB and the module processor PCB travel across the fan PCB.

Pulse Oximetry PCB

The pulse oximetry PCB acquires arterial oxygen saturation and peripheral pulse rate data using the SpO_2 probe.

For Tram 250, 450, 650, and 850 modules, circuit board, pn 800674-001, supports MEI and Nellcor SpO_2 probes and is produced by Marquette Electronics, Inc. The encasing housing assembly for the circuit board is pn 414409-001.

For Tram 200, 400, 600, and 800 modules, circuit board, pn 41189-001, supports Ohmeda probes and is produced by Ohmeda. Ohmeda supports this PCB with an *Ohmeda MINX Module Interface Manual.* The manual includes schematic diagrams, theory of operation, and troubleshooting to the component level.

For service information about the Ohmeda circuit board, the manual, pn 1128-304, is only available directly from the following address.

Ohmeda
1315 West Century Drive
Louisville, CO 80027
Phone:(303) 666-7001
(800) 652-2469
Fax:(303) 665-9231
Telex:296 445 BTI UR

For more details about the interconnect PCB between the Ohmeda circuit board and the power indicator circuit board, refer to chapter 25.

Module Processor PCB

Versions

There are three different versions of the module processor PCB:

- PN 800210-001 was used first in all of the A-series modules; and
- PN 800210-002 was introduced in the SL-series modules, and then added to the A-series modules; and
- PN 800210-005 replaced both of the first two versions.

NOTE
You may replace either version -001 or -002 board with a -005 board, but do not replace a -005 with a -001 or -002 circuit board.

Overview

The module processor PCB performs most of the data processing in the Tram module. It contains two microprocessors and the support hardware necessary to run them. It collects patient data from the acquisition processor and pulse oximetry pcb assemblies, processes that data, and formats the data for a Series 70XX monitor, Tramscope monitor, Solar monitor, or a transport display. The data then passes through the power supply PCB, pn 401309, on its way to a monitor, or through the non-isolated input PCB, pn 401315, on its way to a transport display.

The module processor PCB is a dual processor design consisting of a main microprocessor U3 and communication controller U48. Both processors operate at a frequency of 14.7456-MHz. The dual processor approach frees the main microprocessor from performing low level tasks such as A/D converter control and UART servicing, allowing the available main microprocessor time to be used for digital filtering, arrhythmia analysis, and other algorithmic processing. Communications, analog outputs, and most other I/O tasks are handled by the communication controller. Patient waveform data is acquired by the acquisition processor PCB which contains its' own processor.

Operating code for the TRAM module is stored in electrically erasable flash EPROM memory U16 and U17 and downloaded at each power- up from the main microprocessor to the other processors in the module. Code may be updated electrically via communication with a PC directly to the front connector.

Main Microprocessor

The main microprocessor U3 functions as the host CPU. It controls and coordinates the activities of the other processors in the module. The main microprocessor accesses fairly large amounts of program and data storage memory (for an embedded system). On power up, it downloads operating code to both the communication controller and the acquisition processor on the acquisition processor PCB via an internal synchronous serial link. Communication with the communication controller is handled by dual-port RAM U36 which provides asynchronous access to the shared static RAM array U29-U32, except for the case in which both processors attempt to access the same address and one is performing a write operation.

Given below is the overall block diagram for the module processor PCB. Details are discussed in the following paragraphs.

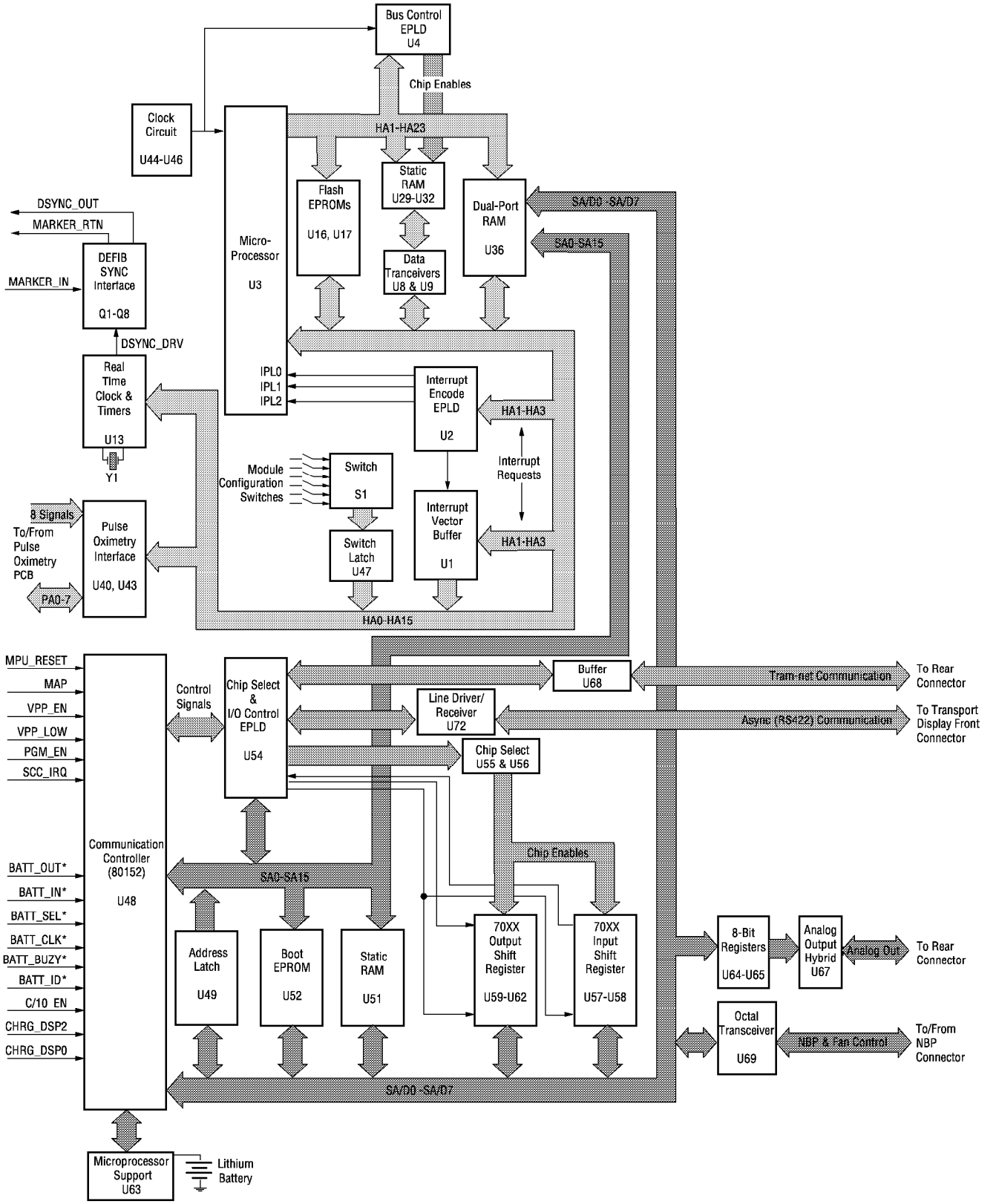

The following is a summary of the main microprocessor U3 hardware features:

- It operates at 14.7456-MHz and an external clock applied via pin 15. All logic requiring a synchronized clock is driven by the external clock source.
- 512K bytes of flash program memory U16-U17 (1 wait state) is electrically bulk erased and reprogrammed in system. 150nS access time parts operate at 1 wait state.
- 512K bytes CMOS battery-backed static (1 wait state). The entire static RAM array U29-U32 are continuously powered by a 3V 1AH lithium cell. 120 or 150nS chips run at 1 wait state.
- 8K bytes of dual port RAM U36 (zero wait state), is provided for high speed inter-processor communications.
- An interrupt encoder EPLD U2 is used as a dedicated five external interrupt handler. Three of the interrupts are edge-triggered types which are sampled and edge-detected by the EPLD. An 8-bit interrupt vector is output on the lower data bus by a decoder buffer U1 during a zero wait state IACK cycle (I acknowledge).
- Asynchronous bus control using EPLD U4 provides bus control logic for the main microprocessor. It generates chip selects, DTACK, and BUS ERROR signals using a buried or internal bus state counter. Chip selects are generated by decoding address lines A12 - A23.
- Battery-backed real-time-clock U13 provides time and date functions along with two general purpose multi-mode timers. The clock source for the timers is software selectable up to a maximum of 7.3728-MHz. The real-time-clock runs at 32.768-KHz using an on chip oscillator with external crystal Y1. A trim capacitor C2 provides the frequency fine-tuning required for accurate time keeping.
- The pulse oximetry function is implemented by a microprocessor based board either built by MEI or sourced by OHMEDA, called the MINX. It interfaces to the main microprocessor via one 8-bit input port, one 8-bit bidirectional port, and a number of handshake and control signals. In addition, the MINX generates two interrupts to the main microprocessor. The I/O ports appear as standard memory mapped devices with the handshake lines generated by hardware as the read and write cycles are run by the main microprocessor.

A 8-bit communication controller U48 functions as the serial communications and I/O processor. The communication controller retains the instruction set and on-chip peripherals timer/counters, UART, I/O ports, etc. In addition, it features a multi-protocol communication controller called the “Global Serial Channel,” two channels of DMA, and three more general purpose I/O ports (for a total of six ports).

Communication Controller

Upon system power-up, the communication controller executes code stored in a 8K x 8 boot EPROM U52. Unlike the flash memory used for the main microprocessor, the boot code is permanent and may not be updated electrically. Initially the communication controller holds the main microprocessor in reset. When ready, it will allow the main microprocessor to come out of reset and the two will establish communications via the dual-port RAM U36. The main microprocessor then downloads operating code which the communication controller stores in static RAM U51 for execution. The normally separate program and data memory areas of the communication controller are combined into one block of 64K in static RAM U51, allowing the communication controller to execute code out of RAM.

The following is a summary of the I/O and system related functions handled by the communication controller U48:

- Controls enable signals for all other systems in the Tram. The idea here is to have one processor coordinate and control the status of the many subsystems in the Tram module. These include the main microprocessor reset, the acquisition power (and hence the acquisition processor reset), the MINX pulse oximetry board, the cooling fan, the NIBP module, and the flash memory programming controls. The hardware watchdog timer must also be serviced by the communication controller. Should the watchdog time-out, the microprocessor will be reset and the subsystems will be disabled.
- Implements the multi-protocol backplane digital interface. The Tram supports three different backplane interfaces including the 7010 synchronous shift register interface, asynchronous communications at 38.4K baud, and Tram-net synchronous network communications at 921.6K baud.
- Provides asynchronous communications with the TRAM LCD display at 38.4K baud via the front panel DISPLAY PORT. The communication controller contains an on-chip single channel UART which must be switched between the display port and the backplane.

  NOTE
  While the Tram supports asynchronous communications to both the display and the backplane, it cannot do so simultaneously. When used with low-end async-only Tramscope monitors, the Tram module cannot provide uninterrupted monitoring capability.

- Communicates with the data acquisition module synchronously at 921.6K baud either internally or over Tram-net communication. With Tram-net systems the acquisition data is actually sent onto the network and received back by the communication controller.

- The analog output hybrid U67 provides eight channels of analog output written to a 16-bit data/control port at a rate of 480-Hz. An internal DAC converts the port data to an analog voltage which is stored on a "hold" capacitor, buffered, and output.
- The Tram contains a small, low-noise cooling fan which is switched on as needed based on temperature information received from the acquisition processor. In the 7010 bedside monitor system, the fan will typically run continuously. In new Tram-rac systems, additional cooling should not be needed and the fan will remain off. Running the fan on an "as needed" basis minimizes the amount of dust, lint, etc. introduced into the module.
- The NBP module interface provides an 8-bit bidirectional port, two register select lines (buffered address lines), independent read and write strobes, an I/O chip select signal, and a master enable.
- The Tram module supports three different communications interfaces to/from its' backplane connector to make it compatible with both existing Series 70XX-type monitors and Tram Critical Care systems. These include the following:
  - Series 70XX synchronous shift register interface
  - Tram-net synchronous communication at 921.6K baud
  - Asynchronous communication at 38.4K baud

Block diagrams for each are presented on the next page. Tram-net systems require a carrier detect signal which is driven low as long as data transmissions are detected on the network. Carrier detect is driven high 1-1/2 bit times after the last edge is detected. In addition, if the acquisition processor and the communication controller were to transmit Tram-net data simultaneously (i.e. collide, as indicated by an overlap of each processors' driver enable signal), a special 'collision presence' waveform must be output to allow all network users to detect the collision. Buried logic on the chip select EPLD U56 handles these functions.

Memory and I/O device chip selects are also generated by the chip select EPLD. The fifteen device chip selects are output as four encoded chip selects (ECS0, ECS1, ECS2, and ECS3) which are expanded externally by a decoder chip select device U55.

DEFIB SYNC Interface

The DEFIB SYNC interface will detect QRS and output trigger pulse on pin 3 of the 6-pin circular connector labeled DEFIB SYNC. A Marquette defibrillator will return the same pulse on pin 4 if it is powered up and SYNC MODE is selected. The monitor then displays a marker pulse on the screen. Both signals are referenced to pin 2 (DGND). The defibrillator will fire when the SHOCK key(s) are pressed and the sync pulse arrives at the TRIGGER IN input.

SYNC MODE can be selected on the defibrillator only if it is connected to the Tram module and both units are powered up. The Tram SYNC OUT is open circuit when not powered to allow the defibrillator to detect the power OFF condition.

The following block diagrams represent the different types of communication provided by the module processor PCB.

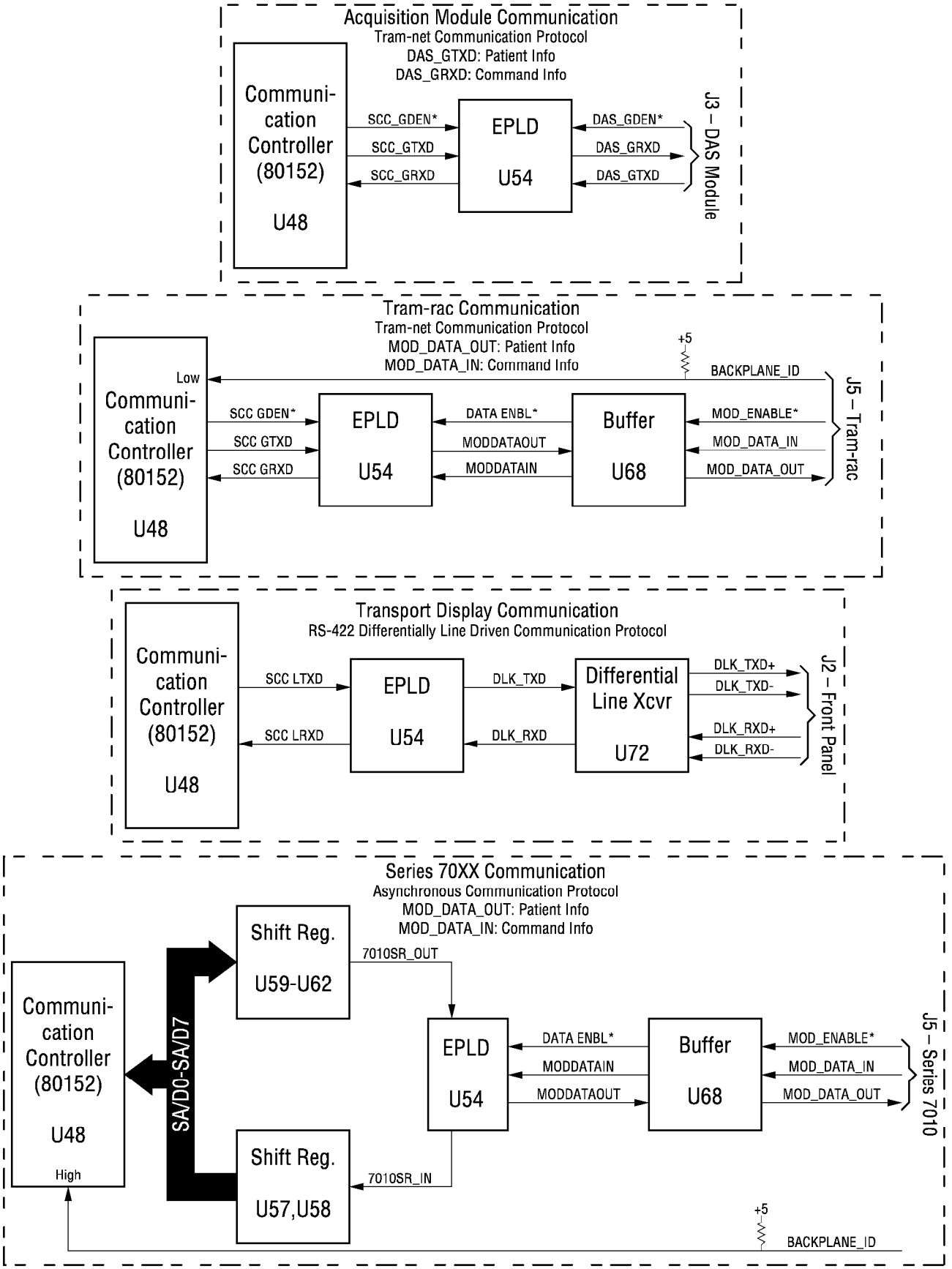

4 CALIBRATION

Adjustments, Jumpers, and Switches **4-2**

Power Supply PN 401309 ..... **4-3**
Clock Frequency Calibration 4-3

Isolated Power Supply PCB PN 402329 ..... **4-4**
+5-Volt Isolated Output Calibration 4-4

Module Processor PCB PN 800210 ..... **4-5**
Switches and Jumpers 4-5
Switches for Versions 001/002 4-6
Switches for Versions 005 Only 4-7
Real-Time Clock Calibration 4-8
Battery Low Voltage Trip-Point Calibration 4-9

Acquisition Processor PCB PN 800330 ..... **4-10**
Analog-to-Digital Converter Calibration 4-10

Acquisition Processor PCB PN 801040 ..... **4-11**
Analog-to-Digital Converter Calibration 4-11

NBP Calibration **4-12**
Accuracy 4-12
Frequency 4-12
Special Equipment/Tools 4-12
Preparation 4-13
Two Procedures 4-13
NBP Test for Tram Critical Care Monitors 4-15
NBP Test for Series 70XX Monitor 4-21

Software Update Procedure **4-22**
Required Special Tools/Equipment 4-22
Interconnection 4-22
PC Setup 4-23
Generic Procedure 4-23
Completion 4-25

Adjustments, Jumpers, and Switches

The following list summarizes Tram module's switches, jumpers, and adjustments. The following pages contain procedures, in much greater detail, for setting these items.

NOTE
Before starting any calibration procedure, refer to the "Considerations for Special Components," listed in Chapter 3: "Troubleshooting." This PCB uses many CMOS components, and when exposed to outside influences is highly susceptible to ESD damage.

Power Supply PCB, pn 401309

R14	Power supply clock frequency adjustment

Isolated Power Supply PCB, pn 402329

R1	+5 ISO voltage adjustment

Module Processor PCB, pn 800210

W1	Defib sync level jumper
W2	Defib sync duration jumper
W3	Battery disconnect jumper
S1	Various software and hardware configuration switches
C2	Real-time clock frequency adjustment
R64	Battery low voltage trip point adjustment

Acquisition Processor PCB, pn 800330

R16	Analog-to-digital converter offset adjustment
R17	Analog-to-digital converter gain adjustment

Acquisition Processor PCB, pn 801040

R35	Analog-to-digital converter offset adjustment
R37	Analog-to-digital converter gain adjustment

This chapter also includes non-invasive blood pressure (NBP) calibration procedures. These calibration procedures are performed through software, and do not require manual adjustments.

Power Supply PN 401309

Clock Frequency Calibration

The following procedure sets the frequency of the clock oscillator for the power supply. This procedure is only necessary when the power supply PCB has been repaired or replaced.

Before starting this procedure, refer to the "Considerations for Special Components," listed in Chapter 3: "Troubleshooting." This PCB is made almost entirely of CMOS components, and, when exposed to outside influences, is highly susceptible to ESD damage.

1. Expose the power supply PCB by removing the outside covers, shielding plates, etc. from the Tram module. Exploded views shown in chapters 7 through 16 will show the location of the circuit board, as well as the obstructions to the circuit board. You'll have to remove the four screws that secure the power supply PCB to the frame to access the adjustments.
2. Apply power to the Tram module. The easiest way to do this is to connect a Smart-pac Transport display to the front panel connector of the Tram module.
3. The pulse width modulator must be warmed up before continuing with the procedure. Wait at least two minutes before going to the next step.
4. Connect a frequency counter across diode CR2.
5. Adjust variable resistor R14 until the frequency counter reads 95.0 kHz (±1.0 kHz).

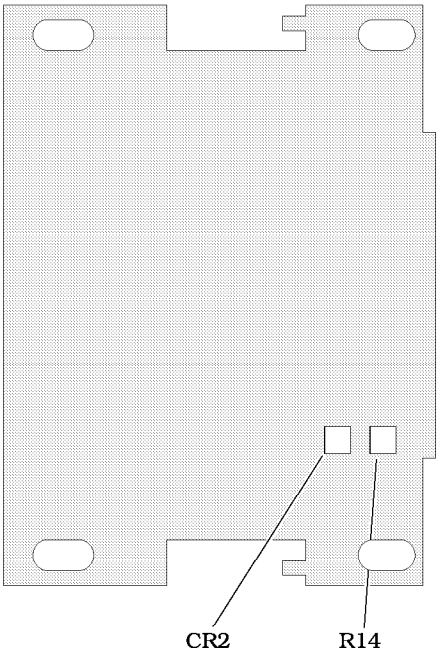

6. Seal the end of variable resistor R14 to prevent it from moving.
7. Remove power from the Tram module.
8. Reassemble the Tram module.

Isolated Power Supply PCB PN 402329

+5-Volt Isolated Output Calibration

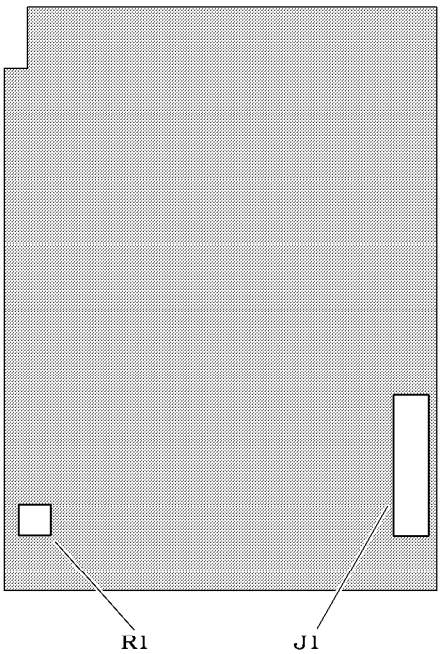

The following procedure accurately sets the +5-volt isolated power output of the isolated power supply PCB. This procedure is only necessary when the isolated power supply PCB has been repaired or replaced.

Before starting this procedure, refer to the "Considerations for Special Components," listed in Chapter 3: "Troubleshooting." This PCB use many CMOS components, and, when exposed to outside influences is highly susceptible to ESD damage.

You'll need an extender cable so you can access the adjustments. To make the extender cable, you need two 2 x 8, 0.010-inch center connectors, pn 1783-016. You also need a pc header, pn 1778-916, and some wire. Wire the extender cable so that each pin on one connector is directly wired to the same pin on the other connector.

1. Expose the data acquisition module by removing the outside covers, shielding plates, etc. from the Tram module. Exploded views shown in chapters 7 through 16 will show the location of this assembly, as well as the obstructions to the assembly.
2. Remove the top cover of the data acquisition module to reveal the isolated power supply PCB.
3. Pull up on the power supply PCB to disconnect it from the acquisition PCB.
4. Connect the extender cable between connector J1 on the acquisition PCB and connector J1 on the isolated power supply PCB.
5. Apply power to the Tram module. The easiest way to do this is to connect a Smart-pac Transport display to the front panel connector of the Tram module.
6. Connect a volt meter across pins 6(–) and 7(+) of connector J1.
7. Adjust variable resistor R1 until the volt meter reads 5.00 V (±0.01 V).
8. Seal the end of variable resistor R1 to prevent it from moving.
9. Remove power from the Tram module.
10. Reassemble the Tram module.
11. Perform the current leakage and hi-pot tests listed in Chapter 5: "Preventive Maintenance."

Module Processor PCB PN 800210

Switches and Jumpers

This page and the next describe the functions of the switches and jumpers on the module processor PCB, pn 800210.

NOTE
The position of the jumpers depends on the version of the circuit board.

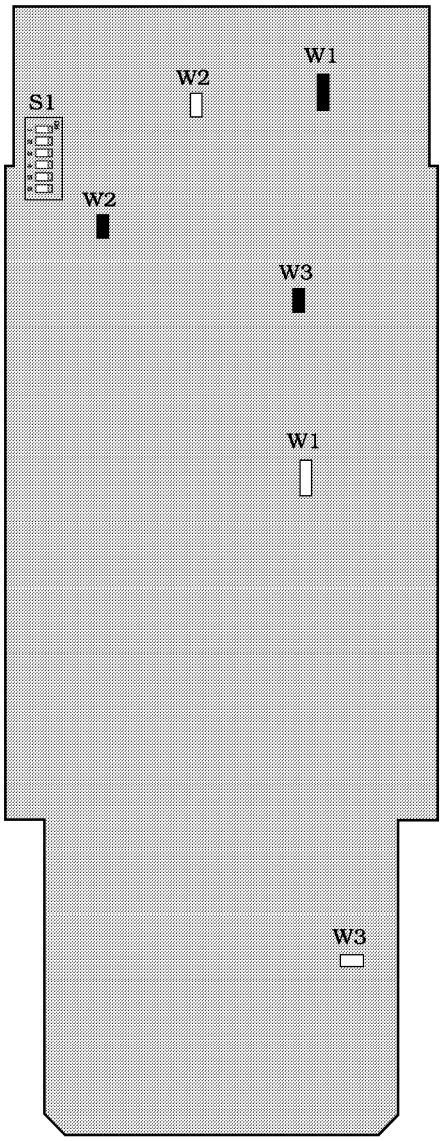

▮ Indicates position for PN 800210-005

▯ Indicates position for PN 800210-001/2

There are three jumpers on this circuit board as follows:

W1 This jumper controls the output level of the defib sync pulse through the front panel connector. This jumper can be placed in one of two positions:

5V install a jumper in this location if the defibrillator used with the Tram module needs a 5-volt pulse, or

15V install a jumper in this location if the defibrillator used with the Tram module needs a 15-volt pulse.

This jumper is generally placed in the 5V position on new Tram modules.

W2 This jumper controls the pulse width of the defib sync pulse:

- install this jumper for a 100-millisecond pulse, or
- remove this jumper for a 10-millisecond pulse.

This jumper is generally not installed on new Tram modules.

W3 This jumper is provided to allow battery BT1 to be removed from the circuit for calibration and testing. Jumper W3 must be in place for proper operation.

Switches for Versions 001/002

Switch S1 is the only switch on the module processor PCB. This switch is a 6-station dip switch that is used to configure both hardware and software parameters. The following are the functions of each of the individual switch stations.

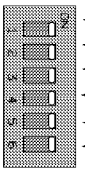

SW1 68000 Processor Clock Disable. The clock disable feature allows the 68000 microprocessor to be driven by an external clock source (typically an emulator) for development and service purposes. When the clock is disabled, an external clock must be applied to pin 15 of the 68000 microprocessor socket (U3). Note also that all logic on the module processor PCB that shares the clock signal with the 68000 microprocessor will also be driven by the external clock signal.

ON 68000 clock disabled

OFF 68000 microprocessor clock enabled

SW2 68000 Processor Clock Frequency. A half-speed clock may be selected for development and service testing where the test equipment (usually an emulator) is not capable of running at 14.7456 MHz, and an external clock is not available.

ON Clock speed = 7.3728 MHz

OFF Clock speed = 14.7456 MHz

SW3 Enables or inhibits software updates and NBP calibration on all Tram modules.

ON Inhibit software updates and NBP calibration. During NBP calibration, when you select CAL GAIN from the menu, you'll be returned to the NBP CAL menu. You must turn this station off before proceeding.

OFF Normal operation

SW4 Tram Integral Battery Option. The Tram 300 can be equipped with a Smaragdite battery pack. This switch enables that option.

ON Tram 300

OFF Tram 100, 200, 500, or 600

SW5 Unit System Select

ON English Units

OFF SI Units

SW6 Power Frequency Select.

ON 50 Hz

OFF 60 Hz

Switches for Versions 005 Only

Switch S1 is the only switch on the module processor PCB. This switch is a 6-station dip switch that is used to configure both hardware and software parameters. The following are the functions of each of the individual switch stations.

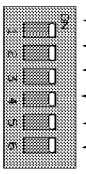

SW1 Not Used

SW2 Not Used

SW3 Enables or inhibits software updates and NBP calibration on all Tram modules.

ON Inhibit software updates and NBP calibration. During NBP calibration, when you select CAL GAIN from the menu, you'll be returned to the NBP CAL menu. You must turn this station off before proceeding.

OFF Normal operation

SW4 Tram Integral Battery Option. The Tram 300 can be equipped with a Smartpac battery pack. This switch enables that option.

ON Tram 300

OFF Tram 100, 200, 500, or 600

SW5 Unit System Select

ON English Units

OFF SI Units

SW6 Power Frequency Select.

ON 50 Hz

OFF 60 Hz

Real-Time Clock Calibration

The real-time clock on the module processor PCB may not be calibrated in the field. Therefore, if you replace any components in the real-time clock circuit, you should return the module processor PCB to Marquette Electronics, Inc. for calibration. The real-time clock circuit consists of capacitors C1 and C2, real-time clock U13, and oscillator Y1.

Battery Low Voltage Trip-Point Calibration

The module processor PCB contains battery-backed static RAM. The battery is a 3.0-volt battery, and is deemed too low to power the RAM when it has drained to the point where it only supplies 2.1 volts. This adjustment ensures that the Tram module will notify the transport display when the battery reaches the 2.1-volt level. The transport display then shows a service message on the display, CALL SERVICE 208, notifying the user that the battery should be changed.

This calibration should only be necessary when the module processor is removed and replaced.

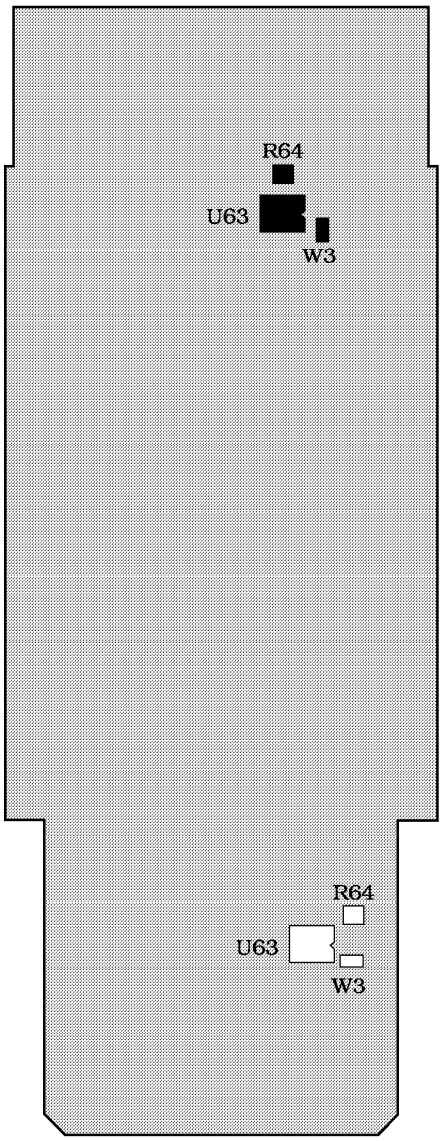

Indicates position for PN 800210-005

Indicates position for PN 800210-001/2

NOTE
The position of the jumpers depends on the version of the circuit board.

1. Remove jumper W3.
2. Turn variable resistor R64 fully clockwise. Some boards use a Murata Erie variable resistors for R64. These variable resistors have no positive mechanical stops, so you'll have to estimate full clockwise as best you can.
3. Apply an adjustable voltage source, set to 3.0 volts, to the W3 socket that is closest to the edge of the circuit board. The ground of the voltage source should be attached to a ground on the circuit board (pin 4 of U63 is a good one).
4. Verify pin 10 of U63 is a logic high.
5. Adjust the voltage source smoothly down to 2.1 volts. You must do this slowly and smoothly to avoid any undershoot.
6. Observe the logic level of pin 10 of U63 while slowly turning variable resistor R64 counter-clockwise. When the logic level of U63-10 goes low, stop turning.
7. Test this adjustment by ramping the power source from 3 volts to 2.1 volts again. Pin 10 of U63 should switch from a high to a low state at 2.1 volts ±50 millivolts.
8. Seal the end of variable resistor R64 to prevent it from moving.
9. Remove power from the Tram module.
10. Reassemble the Tram module.
11. Perform the Checkout Procedure, Current Leakage Tests, and Hi-Pot tests listed in Chapter 5: "Preventive Maintenance."

Acquisition Processor PCB PN 800330

Analog-to-Digital Converter Calibration

The following procedure accurately sets the zero offset and gain of the analog-to-digital converter on the acquisition processor PCB. This procedure is only necessary when the acquisition processor PCB has been repaired or replaced.

Before starting this procedure, refer to the "Considerations for Special Components," listed in Chapter 3: "Troubleshooting." This PCB uses many CMOS components, and when exposed to outside influences is highly susceptible to ESD damage.

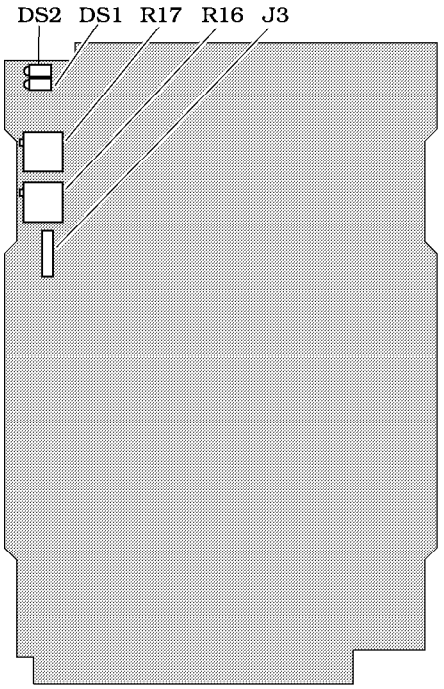

1. Expose the data acquisition module by removing the outside covers, shielding plates, etc. from the Tram module. Exploded views shown in chapters 7 through 16 will show the location of this assembly, as well as the obstructions to the assembly.
2. Remove the top cover of the data acquisition module to reveal the acquisition processor PCB.
3. Apply power to the Tram module. The easiest way to do this is to connect a transport display with a battery pack to the front panel connector of the Tram module.
4. Jumper pins 2 and 3 of connector J3 together to enable the calibration mode. LEDs DS1 and DS2 will blink 5 times simultaneously to indicate the calibration mode is enabled.
5. Connect a low-noise, precision voltage source to the acquisition processor at pins 1 (+) and 4 (–) of connector J3. Set the voltage source to output –9.9976 volts.
6. If the offset adjustment of the analog-to-digital converter is inaccurate, either DS1 or DS2 will light.
   - If DS1 lights, rotate variable resistor R16 counter-clockwise until both lights are off.
   - If DS2 lights, rotate variable resistor R16 clockwise until both lights are off.

   Occasional blinking of the LEDs throughout the calibration procedure is normal. It doesn't necessarily mean that calibration is necessary again.
7. Adjust the voltage source to +9.9927 volts.
8. If the gain adjustment of the analog-to-digital converter is inaccurate, either DS1 or DS2 will light.
   - If DS1 lights, rotate variable resistor R17 counter-clockwise until both LEDs are off.
   - If DS2 lights, rotate variable resistor R17 clockwise until both LEDs are off.
9. Seal the end of variable resistors R16 and R17 to prevent them from moving.
10. Remove all power from the Tram module.
11. Remove the jumper from J3 and reassemble the Tram module.
12. Perform the Checkout Procedure, Current Leakage Tests, and Hi-Pot tests listed in Chapter 5: "Preventive Maintenance."

Acquisition Processor PCB PN 801040

Analog-to-Digital Converter Calibration

The following procedure accurately sets the zero offset and gain of the analog-to-digital converter on the acquisition processor PCB. This procedure is only necessary when the acquisition processor PCB has been repaired or replaced.

Before starting this procedure, refer to the Considerations for Special Components, listed in Chapter 3: Troubleshooting. This PCB uses many CMOS components, and when exposed to outside influences is highly susceptible to ESD damage.

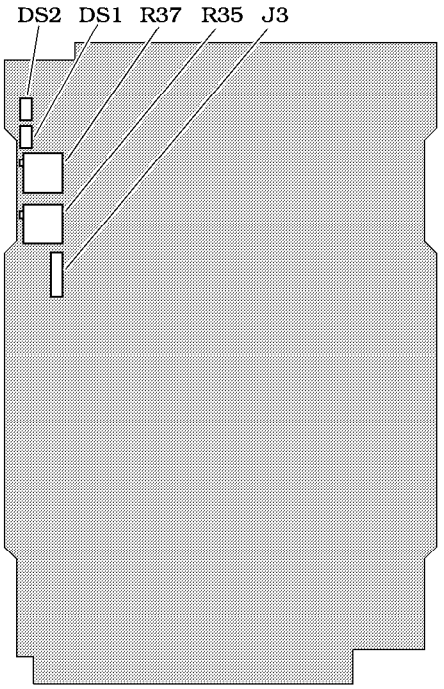

1. Expose the data acquisition module by removing the outside covers, shielding plates, etc. from the Tram module. Exploded views shown in chapters 7 through 16 will show the location of this assembly, as well as the obstructions to the assembly.
2. Remove the top cover of the data acquisition module to reveal the acquisition processor PCB.
3. Apply power to the Tram module. The easiest way to do this is to connect a transport display with a battery pack to the front panel connector of the Tram module.
4. Jumper pins 2 and 3 of connector J3 together to enable the calibration mode. LEDs DS1 and DS2 will blink 5 times simultaneously to indicate the calibration mode is enabled.
5. Connect a low-noise, precision voltage source to the acquisition processor at pins 1 (+) and 4 (–) of connector J3. Set the voltage source to output –9.9976 volts.
6. If the offset adjustment of the analog-to-digital converter is inaccurate, either DS1 or DS2 will light.
   - If DS1 lights, rotate variable resistor R35 clockwise until both lights are off.
   - If DS2 lights, rotate variable resistor R35 counter-clockwise until both lights are off.

   Occasional blinking of the LEDs throughout the calibration procedure is normal. It doesn't necessarily mean that calibration is necessary again.
7. Adjust the voltage source to +9.9927 volts.
8. If the gain adjustment of the analog-to-digital converter is inaccurate, either DS1 or DS2 will light.
   - If DS1 lights, rotate variable resistor R37 clockwise until both LEDs are off.
   - If DS2 lights, rotate variable resistor R37 counter-clockwise until both LEDs are off.
9. Seal the end of variable resistors R35 and R37 to prevent them from moving.
10. Remove all power from the Tram module.
11. Remove the jumper from J3 and reassemble the Tram module.
12. Perform the Checkout Procedure, Current Leakage Tests, and Hi-Pot tests listed in Chapter 5: "Preventive Maintenance."

NBP Calibration

Accuracy

The accuracy of your non-invasive blood pressure (NBP) readings depends on the accuracy of two things:

- the zero pressure reading, and
- the voltage span of the NBP sensor in the module.

In this procedure you'll make sure that both of these items are accurate, and you'll check for NBP plumbing leaks at the same time.

Frequency

You should perform this procedure when:

- you first get your Tram module,
- before you use it on any patients,
- once every year, and
- each you open the module to make sure the pneumatic system has no air leaks.

Special Equipment/ Tools

You need a few items to perform this procedure.

- You need a Tram-compatible monitor, like a Tram Critical Care monitor (Tramscope or Solar display with Tram-rac housings) or a Series 70XX-type (7000, 7000RA, 7005, 7010, or 7010RA) monitor.
- You need an accurate manometer. A digital one, like the Sensym PDM200M is nice, but you can use a mercury manometer, too.
- You need an NBP tube:
  - If you have a Tram 100, 200, or 250 module, it is pn 9461-203.
  - If you have a Tram 400A module with an NBP connector that protrudes from the front of the module, you need pn 9461-208.
  - If you have a Tram 400A, 400SL, or 450SL module with a recessed NBP connector, or if you have a Tram 800A, 800SL, 850A, or 850SL module, you need pn 9461-212.
- You need an NBP cuff. Any size will do. If you don't have one, order pn 9461-301.
- You need something to wrap the cuff around. PVC pipe from your local hardware store works well.

- You need these items to connect the NBP tube with the manometer and cuff.

Table 4-1. Description

Item	Part Number	Qty
NBP Cuff Coupling	MEI PN 400787-001	1
NBP Hose Coupling	MEI PN 46100-002	1
NBP Tee	MEI PN 4745-101	1
NBP Tubing	MEI PN 401582-001	2

Preparation

Insert the module in the top slot of a Tram-rac 4 housing or Series 70XX-type.

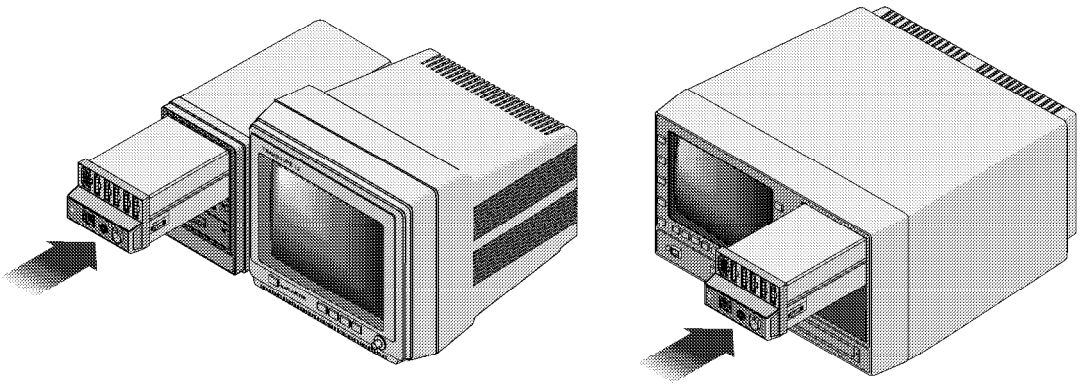

1. Disconnect all parameter cables
2. Apply power to the monitor. If your Tram-rac housing has its own power supply, apply power to it, too.
3. Enure POWER indicator on the Tram module's front panel is turned ON.

Two Procedures

There are two different NBP calibration procedures: one for Tram modules used with Tram Critical Care monitors (Tramscope or Solar display with Tram-rac housings), and one for Tram modules used with Series 70XX-type (7000, 7000RA, 7005, 7010, or 7010RA) monitors.

WARNING
When the NBP cuff is used in this procedure, it must be tightly wrapped around a tube. Never put the cuff around your arm during the calibration procedures. If you do put the cuff around your arm during this procedure, you will injure yourself.

1. Connect a manometer and NBP cuff to the NBP connector on the front of the Tram module as shown below.

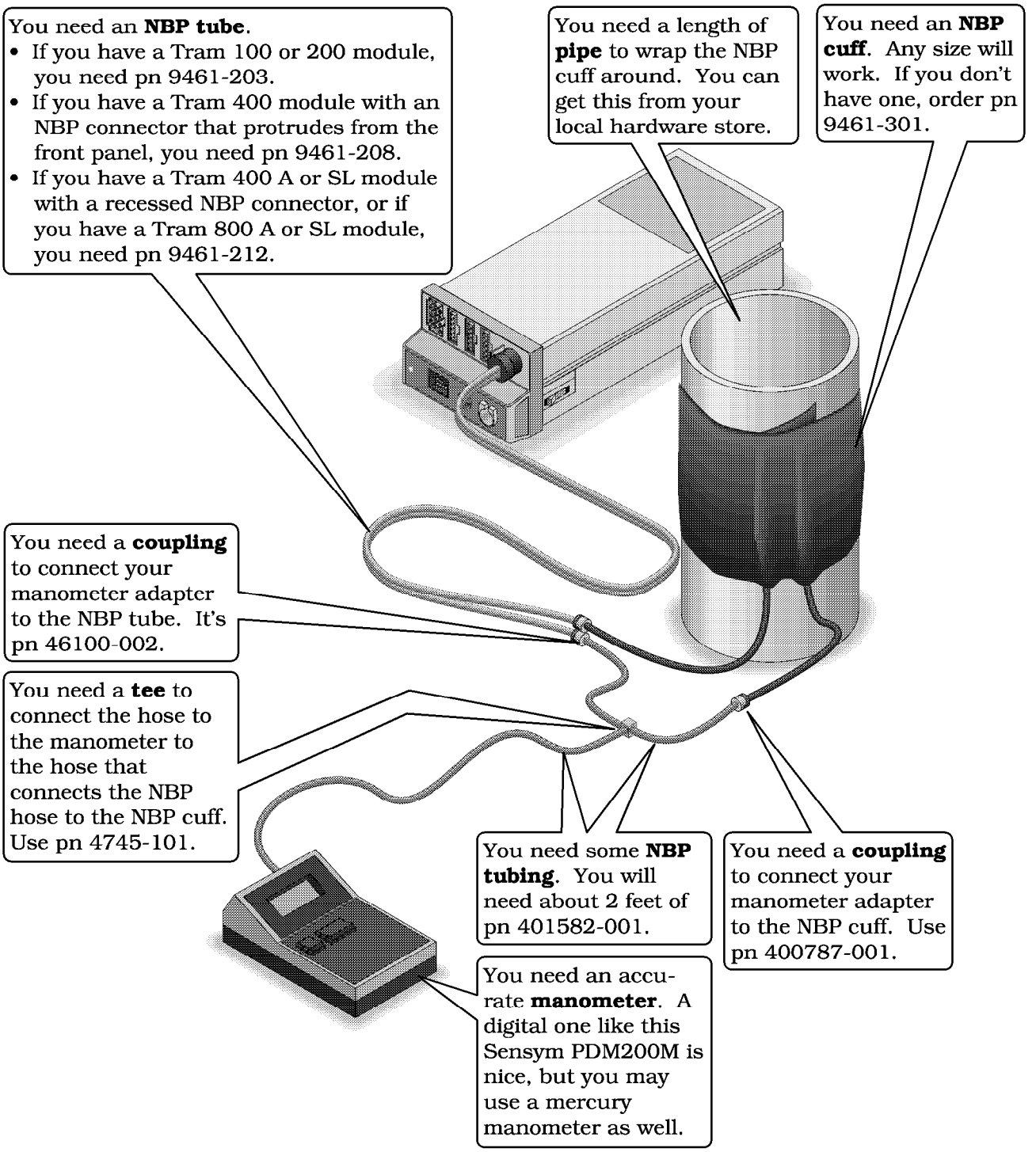

2. Turn the manometer ON, and set its range switch to the 1000 mmHg setting.
3. Select the appropriate procedure on the following pages.

NBP Test for Tram Critical Care Monitors

Perform this test if you are using the Tram module with a Tram Critical Care monitor (Tramscope or Solar monitor). This procedure assumes you have either version 6, 7, or 17 software in your Tramscope/Solar display, Tram-rac housing, and Tram module.

1. From the monitor's main menu, rotate the Trim Knob control to highlight CUSTOMIZE MONITOR (with version 6) or MONITOR SETUP (with version 7/17), and then press the Trim Knob control to select it.

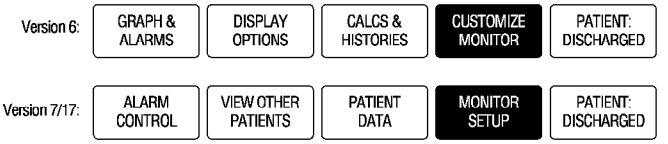

2. Rotate the Trim Knob control to highlight SERVICE MODE, and then press the Trim Knob control to select it.

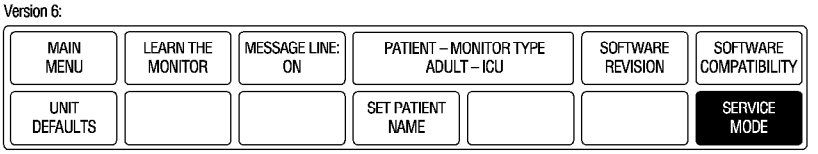

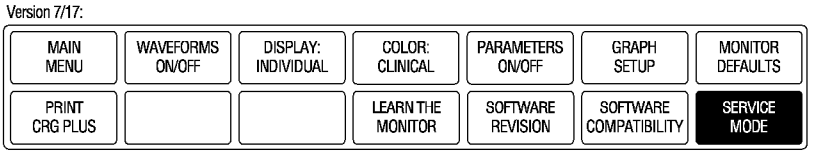

3. You have to enter a password to get into the service mode. The first two digits of the password are the day of the month, and the second two digits are the month. For example, on 7 March, the password would be 0703.
   - Rotate the Trim Knob control to highlight a password digit.
   - Press the Trim Knob control to select the password digit.
   - Rotate the Trim Knob control to change the value of the password digit.
   - Rotate the Trim Knob control to enter the password digit.
   - Repeat the steps above until all of the digits are entered.
   - Rotate the Trim Knob control to highlight SERVICE MODE from the menu.
   - Press the Trim Knob control to enter the service mode.

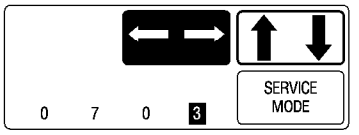

4. If you have version 6 software, rotate the Trim Knob control to highlight CALIBRATE NBP, and then press the Trim Knob control to select it.

   If you have version 7/17 software, rotate the Trim Knob control to highlight CALIBRATE, and press the Trim Knob control to select it. Then rotate the Trim Knob control to highlight CALIBRATE NBP, and press the Trim Knob control to select it.

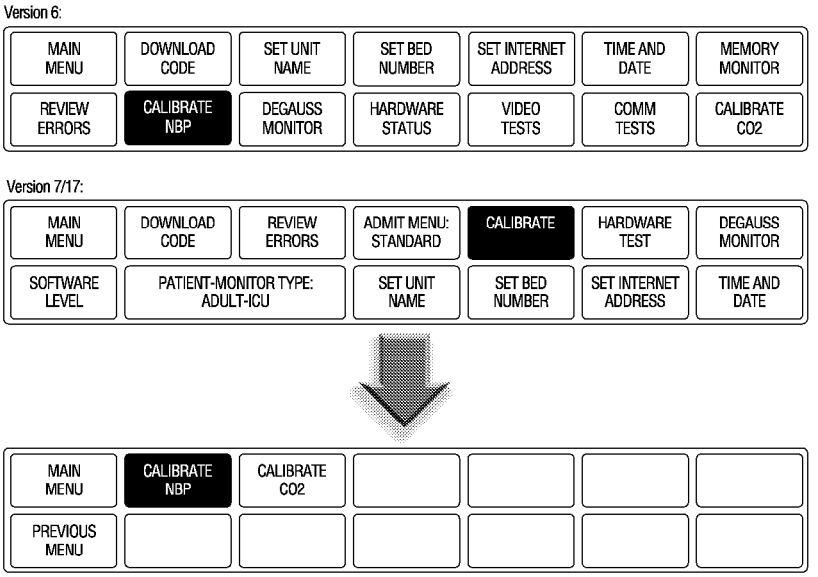

5. Rotate the Trim Knob control to highlight CAL ZERO OFF, and then press the Trim Knob control to select it.

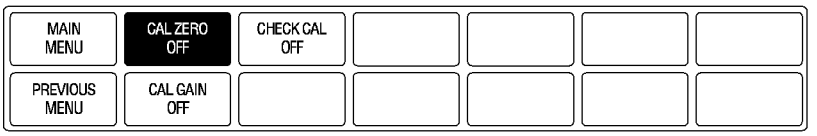

6. Rotate the Trim Knob control to highlight START, and then press the Trim Knob control to select it. The CAL ZERO menu item will show that it is IN PROGRESS, and when it is done it will display OFF again.

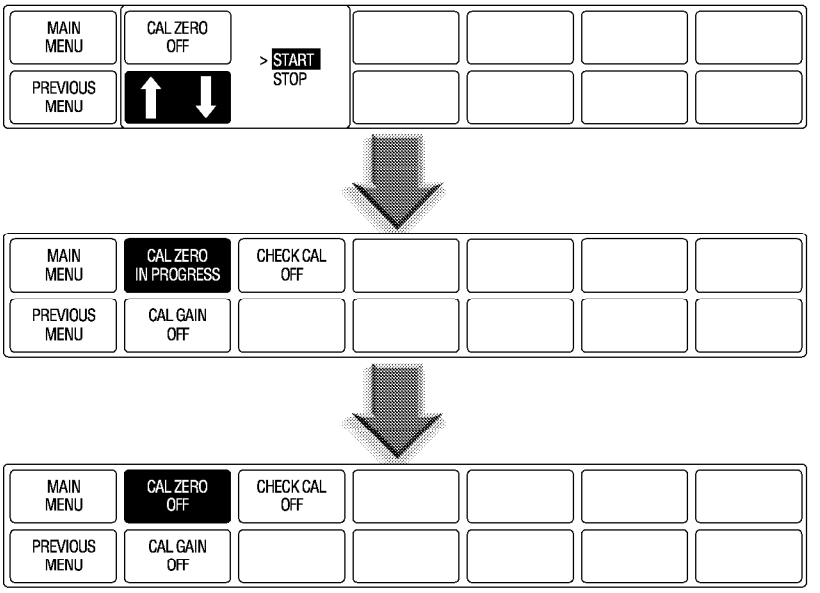

7. Rotate the Trim Knob control to highlight CAL GAIN OFF, and then press the Trim Knob control to select it.

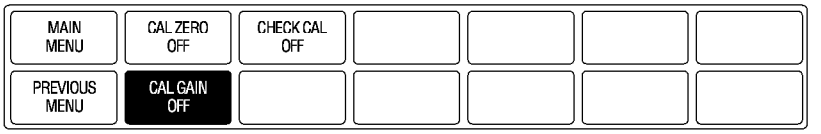

8. Rotate the Trim Knob control to highlight CAL GAIN OFF, and then press the Trim Knob control to select it.

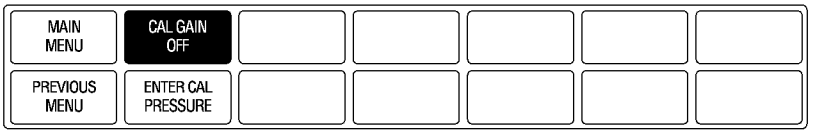

9. Rotate the Trim Knob control to highlight START, and then press the Trim Knob control to select it. The second line of text on the CAL GAIN menu item changes from HOLDING to INFLATING. Then, the Tram module starts pumping up the pressure bulb or cuff—you'll hear the whirring sound of the NBP pump motors, and you'll see an increase in displayed pressures on both the Tramscope or Solar display and the manometer.

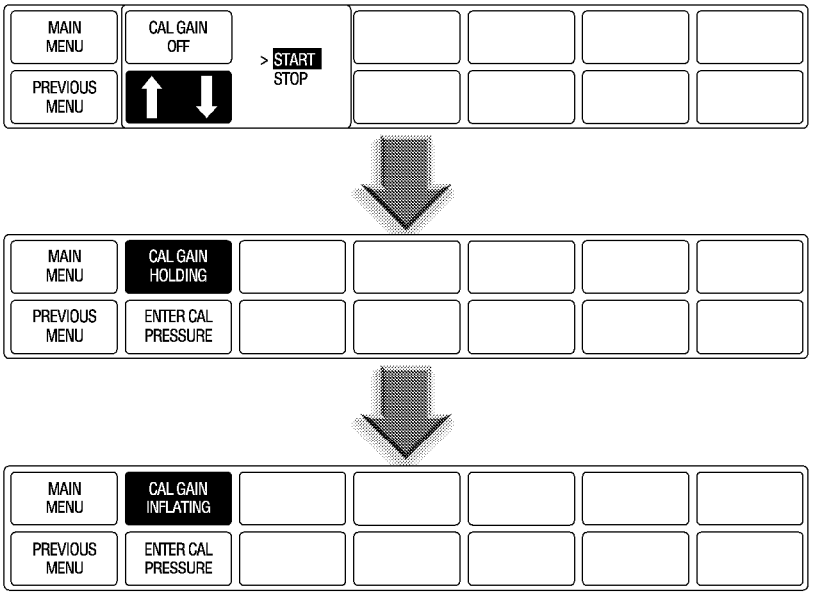

10. The pump shuts off at about 250 mmHg, and the pressure drops slowly to about 240 mmHg before stabilizing. The second line of text on the CAL GAIN menu item changes from INFLATING back to HOLDING. If the pressure continues to drop at a rate of 1 mmHg or more for every five seconds, there is a leak in the NBP plumbing. If there is a leak in the NBP plumbing, you'll have to repair it and restart this calibration procedure.

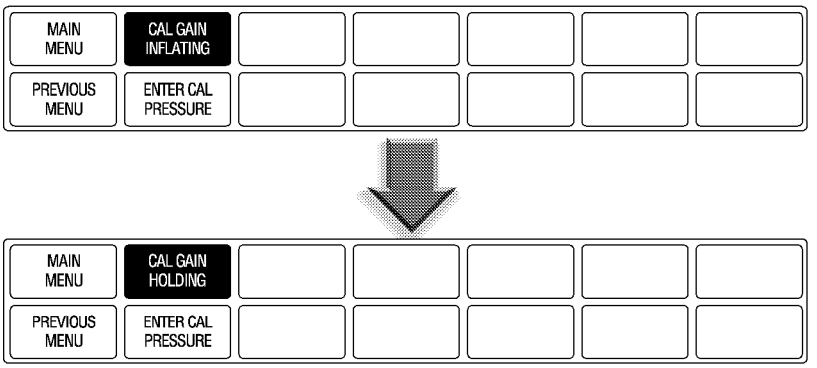

11. Rotate the Trim Knob control to highlight ENTER CAL PRESSURE, and then press the Trim Knob control to select it.

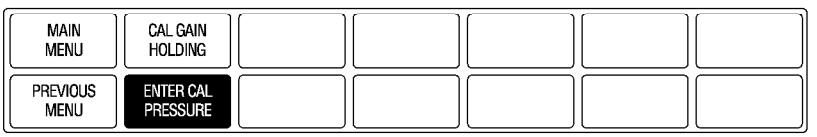

12. An ENTER CAL PRESSURE popup window will appear. Use the Trim Knob control to select a pressure value that is 1 mmHg lower than the current manometer reading.

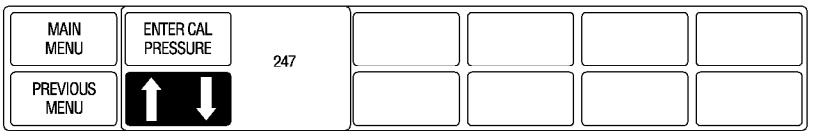

13. When the manometer falls to exactly the value that you selected in the popup window, press the Trim Knob control to enter the value.

14. Rotate the Trim Knob control to highlight CHECK CAL OFF, and then press the Trim Knob control to select it.

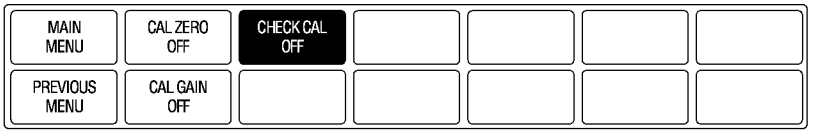

15. Rotate the Trim Knob control to highlight START, and then press the Trim Knob control to select it.

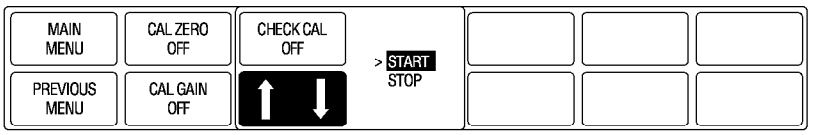

16. The text on the menu item will change from CHECK CAL OFF to CHECK CAL IN PROGRESS. Make sure that the pressure readings (shown as CUFF in the NBP parameter box) on the Tramscope or Solar display and manometer are equal (± 1 mmHg) for at least one full minute.

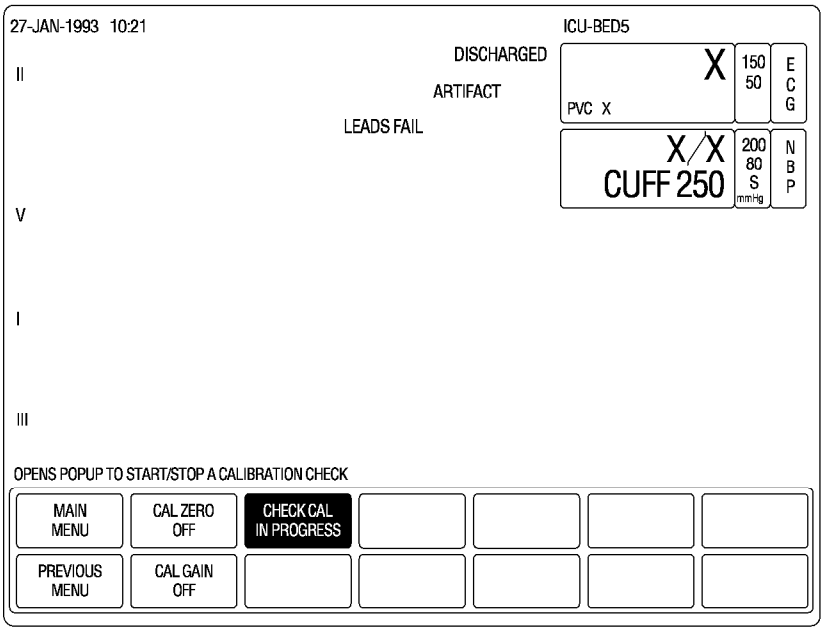

17. Rotate the Trim Knob control to highlight CHECK CAL IN PROGRESS, and then press the Trim Knob control to select it.

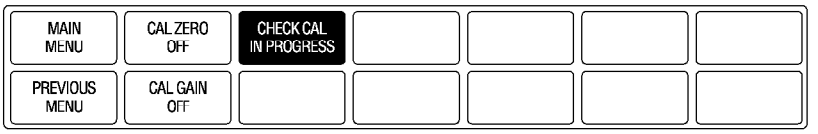

18. Rotate the Trim Knob control to highlight STOP, and then press the Trim Knob control to select it. The module then releases pressure in the bulb or cuff.

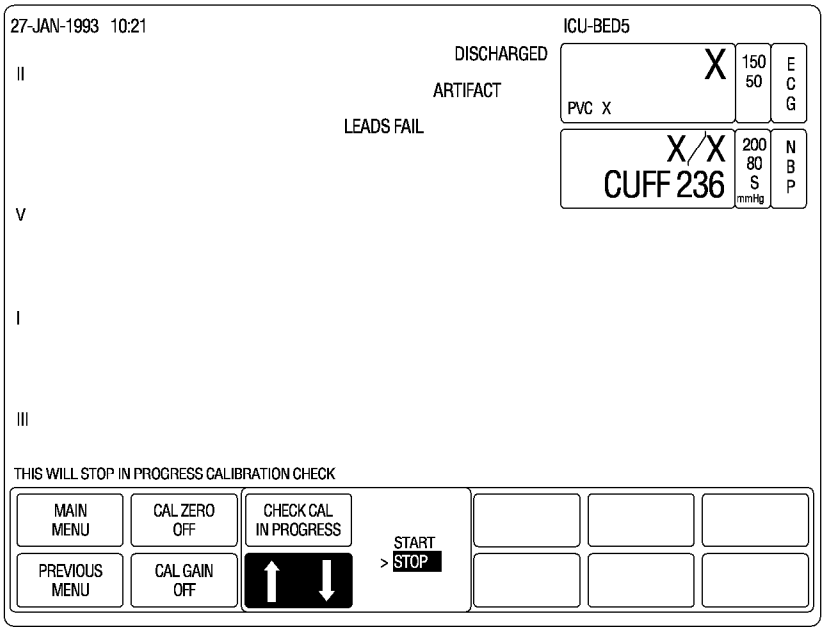

This completes the NBP calibration procedure. Remove the cuff and manometer from the Tram module.

NBP Test for Series 70XX Monitors

You should run this test if you use your Tram module with a Series 70XX-type monitor (Series 7000, 7000RA, 7005, 7010, or 7010RA monitors).

1. Press the SYSTEM key on the monitor.
2. Press the MONITOR SETUP, MONITOR SERVICE, and then CALIBRATE NBP soft keys. Soft keys are the unlabeled keys under the display. The function of each key appears on the display, just above the key.
3. If an NBP cuff is attached to the Tram module, remove it.
4. Press the YES soft key.
5. Press the SET ZERO soft key. The module will then take about 10 seconds to internally set its zero reference point. After this reference point is set, the SET ZERO will no longer be highlighted — it will be return to the same intensity as the rest of the characters on the display.
6. Turn the manometer on, and set its range switch to the 1000 mmHg setting.
7. Press the SET PRESSURE soft key. Make sure the Tram module starts to pump up the pressure bulb or cuff. You can tell it's pumping by the whirring sound of the NBP pump motors, and the increase in displayed pressures on the monitor and manometer.
8. The pump should shut off at approximately 250 mmHg, and the pressure will begin to drop slowly to about 240 mmHg before stabilizing. If the pressure continues to drop at a rate of 1 mmHg or more for every four seconds, there is a leak in the system. If there is a leak in the system, repair it and restart the calibration procedure.
9. At the monitor, key in a pressure value that is 1 mmHg lower than the current manometer reading.
10. When the manometer falls to exactly the value that you keyed into the monitor, press the ENTER key on the monitor.
11. Press the TEST CAL soft key and verify that the pressure readings on the monitor and manometer are equal (± 1 mmHg) for at least one minute.
12. Press the TEST CAL soft key to stop the test.
13. Press the CLEAR key.

This completes the NBP calibration procedure. Remove the cuff and manometer from the Tram module.

Software Update Procedure

This procedure is provided for any Tram modules that may require updating. It describes how to download new software into Tram 100-850 A or SL module by using a laptop personal computer or terminal with programmed software diskettes.

Required Special Tools/ Equipment

This update procedure requires the user to have the following to download the Tram software.

- Tram module update diskette (Call your sales representative for the latest update kit part numbers and for software compatibility issues.)
- a personal computer (PC) to download the software, and
- a download cable kit, pn 404307-001.

The laptop computer (PC) must have the following minimum requirements:

- it must be MS-DOS compatible,
- have a 720K, 3.5-inch diskette drive, and
- have an RS-232 serial port.

Interconnection

To connect the PC to the Tram module, do the following steps in the order given.

- Connect the Tram module cable (part of the download kit) to the display connector on the front of the Tram module.
- Connect the other end of the Tram module cable to the RS-232C to RS-422 converter. Note the RS-232C to RS-422 converter is powered by the module and does not require connection to a power source.
- Connect the PC cable assembly from the RS-232C to RS-422 converter to the D-type connector labeled COMMS or COMM 1 at the rear of the PC.

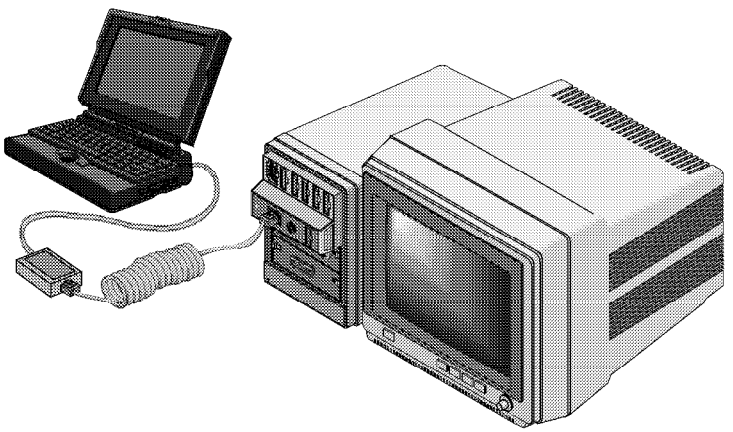

PC Setup

1. Insert the Tram module into an updated Tram-rac chassis (or Series 70XX monitor.) Ensure the power light on the front of the Tram module illuminates.
2. Insert the Tram module update diskette into drive A of the PC.
3. If the PC prompt is not A:\>, type A:\ and press the ENTER key. The PC will respond with an A:\> prompt.
4. Type UPDATE and press the ENTER key. The update program is loaded and will list the Tram Critical Care Monitor UPDATE UTILITIES menu.
5. Press the F7 key until the serial port name that the download converter module is connected to appears in the lower right box of the main menu.

Generic Procedure

Do the following to update each Tram module.

1. Press the F5 key to select TRAM UPDATE menu.

NOTE: If the PC locks up, turn it OFF, remove the diskette from the drive, and start again. (REBOOT)

2. You should see a screen similar to the following.

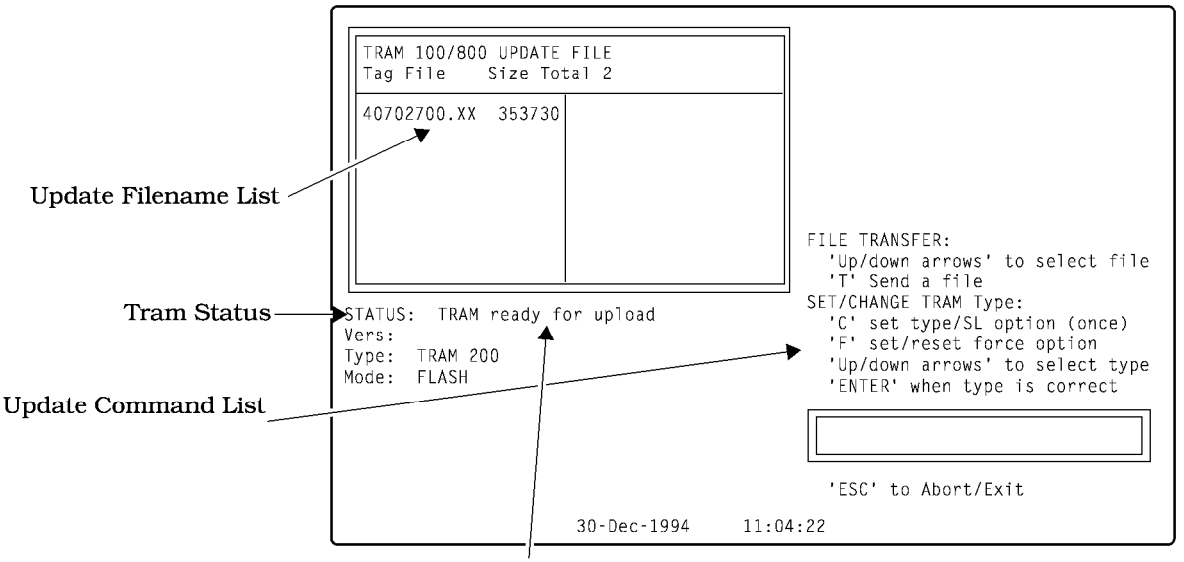

NOTE: The version field in the above display should contain data describing the current version of software in the Tram module.

3. Watch the Tram module status. You should see the following messages.

   Trying to Talk to Tram
   Getting Software Revision
   Getting Tram Type
   Tram Ready for Upload

   Just below Tram status, you will see the current software version, Tram type, and mode.

4. Use the ↓ key to highlight the file that you want to upload and type T or <ENTER> to tag and send the file. The Tram module status will display an UPLOADING TO TRAM message.

5. In the upper right corner of the computer's screen, a box containing file name, number of bytes, and other download parameters will appear. These fields will be updated while the software is uploaded. Below that box there is a message area that shows LOADING FILE and then USING CCITT-CRC as the upload begins.

```
TRAM 100/800 UP LOAD

Sending file: 40702700.XX
  Packet No.:
   Time outs:
 Data errors:
   File size: 353730
  Bytes sent:
  Files sent:
```

* XX indicates the software version.

6. As the PC downloads software to the Tram module, the PACKET NO. and BYTES SENT fields are incremented. The data errors field may also be incremented during the upload. Data errors cause packets to be automatically sent again to the Tram module, so an occasional data error should be disregarded. However, if the data errors are continuous, the Tram module should be serviced.

   If the TIME OUTS field is continuously incremented, it detects a communication error. Disconnect the Tram module, press the ESC key, and start this procedure again.

7. When the software download is complete, the following messages are displayed for the Tram module status.

   Waiting for Tram to restart
   Telling Tram to run in flash
   Getting Software Revision
   Setting Tram Type
   Getting Tram Type
   Tram Upload Complete

   The PC will sound a tone to show that the software upload is complete.

8. Ensure Tram module type, shown below Tram module status. If the Tram module type displayed does not match the type of Tram module that you are updating, it will have to be changed as follows.
   - Type C (or c) to display the Tram type selections (i.e. 100/200/250/300/400/450/500/600/750/800/850.) The selections are also repeated with the SL option. The Tram must be SL capable (hardware/memory changes) to be set with the SL option.
   - Use the ↓ and ↑ keys to scroll through the various Tram types (e.i. 100, 200SL, etc.).
   - The updated Tram type is displayed for the Tram status. A Tram that is not SL capable will respond with the Tram type (e.i. 100), but will NOT have the SL option. The message SL OPTION IS NOT ALLOWED will appear below the mode type.
   - The following sequence should appear for the Tram module status.

     Setting Tram Type
     Getting Software Revision
     Getting Tram Type
     Tram Ready For Upload (or Tram upload complete)

   The software download is now complete.

   If you are updating several Tram modules, you may force all Tram modules to one type by selecting an 'F.' When this option is set, the Tram module's type is forced to one specified type (i.e. 200SL). This option remains set until it is reset by hitting 'F' again.

9. Disconnect the Tram module from the download module.
10. Press the ESC key on the PC to return to the main menu.

Completion

This completes the Tram module software update.

1. Continue with the software update for other modules.
2. Before returning a module to service, perform the Checkout Procedure provided in Chapter 5: "Preventive Maintenance."

For your notes

5 PREVENTIVE MAINTENANCE

Equipment Maintenance Program **5-3**
Recommended Maintenance Schedule 5-3
Recommended Frequency 5-3

Inspection and Cleaning **5-4**
Visual Inspection 5-4
Cleaning Precautions 5-4
Exterior Cleaning 5-4

Checkout Procedure **5-5**
Test Frequency 5-5
Required Tools/Special Equipment 5-5
General Test 5-8
Parameter Tests 5-8
ECG Test 5-9
12SL ECG Test 5-11
Respiration Test 5-12
Blood Pressure Test 5-13
Temperature Test 5-14
Cardiac Output Test 5-15
SpO_2 Test 5-16
NBP Tests 5-18
NBP Test for Tram Critical Care Monitors 5-20
NBP Test for Series 70XX Monitors 5-24
DEFIB SYNC Test 5-25
Fan Test 5-26
Transport Test 5-26
Completion 5-26

Domestic Electrical Safety Tests **5-27**
Test Frequency 5-27
Required Tests 5-27
Test Conditions 5-27

AC Line Voltage Test **5-28**
120 VAC, 50/60 Hz 5-28
240 VAC, 50/60 Hz 5-28

Ground Continuity Test **5-29**

Current Leakage Tests **5-30**
Preparation 5-30
Required Tools/Equipment 5-30
Current Limits 5-31
Patient-Cable-Leakage to-Ground Test 5-31
Patient-Cable-Leakage-into-Patient Leads Test 5-33
Completion 5-34

Hi-Pot Tests **5-35**
Preparation 5-35
Test Frequency 5-35
Required Tools/Equipment 5-35
Generator Setup 5-36
Ground Connection 5-36
High Voltage Connection 5-36
AC Hi-Pot Test 5-37
DC Hi-Pot Test 5-38

Repair Log/PM Inspection Form **5-39**

Equipment Maintenance Program

Recommended Maintenance Schedule

A regular equipment maintenance program helps prevent unnecessary equipment and power failures and also reduces possible health hazards. The maintenance schedule for the Tram 100-850 A and SL modules include the following:

- Inspection; Do this before each time the module is used with a patient.
- General cleaning; Do this before each time the module is used with a patient.
- Checkout procedures; Do these when you first get your module (before you use it to monitor patients), every six months thereafter, and each time you remove and replace a circuit board.
- Current leakage tests; Do these when you first get your module (before you use it to monitor patients), every six months thereafter, and each time you remove and replace a circuit board. Leakage tests verify that the equipment does not propose a health hazard.
- Hi-pot tests; Do these each time you open the acquisition module.
- NBP calibration (refer to Chapter 4: "Calibration"); Do this when you first get your module (before you use it to monitor patients), every year thereafter, and each time you remove and replace a circuit board.

Recommended Frequency

To help you establish a systematic maintenance routine, Marquette Electronics recommends that you perform all maintenance procedures presented in this chapter.

- upon receipt of the module,
- every six months thereafter,
- each time a circuit board is removed or replaced, and
- record the results on the "Preventive Maintenance Inspection Form," included at the end of this chapter.

WARNING
Failure to implement a satisfactory maintenance schedule may cause undue equipment failure and possible health hazards. Unless you have an Equipment Maintenance Contract, Marquette Electronics does not in any manner assume the responsibility for performing the recommended maintenance procedures. The sole responsibility rests with the individual or institution using the equipment. Marquette Electronics service personnel may, at their discretion, follow the procedures provided in this manual as a guide during visits to the equipment site.

Inspection and Cleaning

Visual Inspection

Remove module before making an inspection or cleaning the module.

- Check the case for cracks or other damage.
- Regularly inspect cables for fraying or other damage.
- Inspect all plugs, cables, and connectors for bent prongs or pins.
- Make sure the latches work properly:
  - When you install the Tram module in a monitor, it should be latched firmly into place and should not slide out of the monitor without pressing the latch buttons.
  - When you press the latch buttons, the Tram module should slide easily out of the monitor
- Verify that all cables and connectors are securely seated. Note that replacement of components should be performed only by qualified service personnel.

Cleaning Precautions

To avoid damage to the equipment surfaces, do not use the following cleaning agents:

- organic solvents,
- ammonia based solutions,
- acetone solution,
- alcohol based cleaning agents,
- Bentadine solution,
- a wax containing a cleaning substance, or
- abrasive cleaning agents.

Table 5-1. Recommended Cleaning Supplies

Item	Part Number
Ammonia (diluted) or Cidex solution, or Sodium hypochlorite bleach (diluted), or Mild soap (diluted)	–
Lint-free cloth	TX609
Dust remover (compressed air)	–

Exterior Cleaning

Clean the exterior surfaces with a clean, lint-free cloth and one of the cleaning solutions listed above.

- Wring the excess water from the cloth. Do not drip any liquid into open vents, plugs, or connectors.
- Dry the surfaces with a clean cloth or paper towel.

Checkout Procedure

The following pages describe the checkout procedures for the Tram module. We provide you with these procedures so you can verify the operational performance of the Tram module. If you do not get the results listed in the procedures, your Tram module might not be working properly.

The checkout procedures consist of several tests. You should perform all of the tests applicable to your Tram module in the order in which they are listed.

Test Frequency

This procedure tests the functions of each parameter of the module. We recommend this checkout procedure be performed:

- upon receipt of the module,
- every six months thereafter, and
- each time the module is open or repaired.

Remember to record the date and results on the "Maintenance/ Repair Log" included at the end of this chapter.

Required Tools/Special Equipment

These procedures are based on the assumption that the module under test is used with known good cables and known good test equipment. It also assumes that you are at least somewhat familiar with the operation of all devices required for the procedures. For more information concerning the operation of these components, consult the appropriate operator's manuals.

The following paragraphs list the test equipment, adapters, and cables necessary to complete the checkout procedures. You can use equivalent equipment, but the procedures were written for the test equipment listed here, so you might have to slightly modify some test steps, because the values listed in the steps take into account the accuracy of the simulators, as well as the accuracy of the module. The "Technical Specifications" in Chapter 2: "General Information" for details about the module's accuracy specifications.

1. You will need a monitor to plug the Tram module into. You may use any of these monitors:
   - a Tram Critical Care monitor (a Tramscope display with a Tram-rac housing).
   - a Series 7000 or 7000RA monitor that has been modified to be Tram-compatible, or
   - a Series 7005, 7010, or 7010RA monitor.

2. You will need the simulators and cables listed below to provide waveforms and patient vital signs.

CAUTION
You should never use a patient simulator as a calibration reference because they are generally not precise enough to be trusted as a reference. Make sure that your simulator is accurate by testing it on a known-good monitor.

Table 5-2. Suggested Simulators and Cables

Item	Part Number
Multifunction Micro-Simulator	MEI PN MARQ-1
Cardiac Output Simulator II	MEI PN 900028-001
SpO_2 Simulator	MEI PN 408610-001
ECG Patient Cable	MEI compatible
ECG Leadwire Set	MEI compatible
Blood Pressure Simulator Cable	MEI PN 700095-001
Temperature Adapter	MEI PN 402015-004
Temperature Simulator Cable	MEI PN 6770031
Cardiac Output Cable Adapter	MEI PN 700092-001
MEI (Nellcor-style) SpO_2 Simulator Cable OR (Ohmeda-Style SpO_2 Simulator Cable)	MEI PN 700232-004 OR MEI PN 700232-002)

3. You can use any patient cable or leadwire set that you would usually use on patients.
4. You need these items to build an NBP test fixture:

Table 5-3. Description

Item	Part Number	Qty
NBP Cuff Coupling	MEI PN 400787-001	1
NBP Hose Coupling	MEI PN 46100-002	1
NBP Tee	MEI PN 4745-101	1
NBP Tubing	MEI PN 401582-001	2

5. You need an accurate manometer for the NBP test. A digital one, like the Sensym PDM200M is nice, but you can use a mercury manometer, too.

6. You need an NBP tube for the NBP test:
   - If you have a Tram 100 or 200 module, you will need pn 9461-203.
   - If you have a Tram 400A module with an NBP connector that protrudes from the front of the module, you will need pn 9461-208.
   - If you have a Tram 400 A or SL module with a recessed NBP connector, or if you have a Tram 800 A or SL module, you will need pn 9461-212.
7. You need an NBP cuff for the NBP test. Any size will work. If you do not have one, order pn 9461-301.
8. You need something to wrap the cuff around during that test. PVC pipe from your local hardware store works good.
9. You need an oscilloscope for the DEFIB SYNC test. Since you will use it to view low-frequency ECG and BP waveforms, almost any kind of oscilloscope will work.
10. You need a Smart-pac transport display, or a Series 7200 Tram transport display fitted with a Smart-pac battery backpack.
11. You need a cable to connect your Tram module to the transport display. If you do not already have one, pn 403495-001 is a 3-meter (10-foot) cable.

General Test

1. Install the module in a Tram-rac 4 housing or Series 70XX-type monitor.

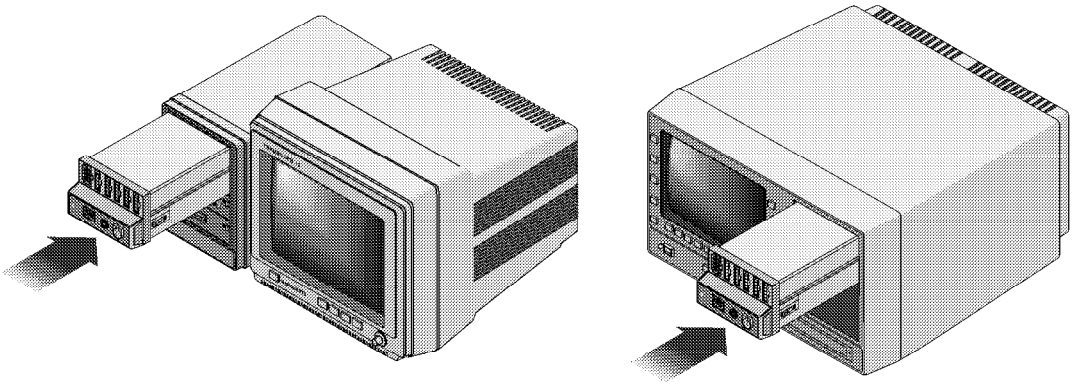

2. Apply power to monitor by turning the rear panel power switch to the ON position.
3. Turn the display ON by pressing the DISPLAY ON/OFF or POWER key on the front panel of the monitor.
4. Make sure the power indicators ON both the monitor and the Tram module are turned ON.
5. Connect patient cable to module.
6. Attach appropriate leads to the simulator.

Parameter Tests

Select the appropriate tests to verify all parameters of the module under test. The parameter tests are presented in the following order.

- ECG Test
- 12SL ECG Test
- Respiration Test
- BP Test
- Temperature Test
- CO Test
- SpO_2 Test
- NBP Test

CAUTION
Make sure to test all parameters per module.

ECG Test

1. Set up the simulator like this:
   - Set heart rate to 80 bpm.
   - Set ECG amplitude to 1.0 mV.
2. Attach a patient cable and leadwires between the ECG connector on the Tram module and the leadwire connectors on the top of the patient simulator.

ECG Patient Cable:

Lead-Wires	AHA Colors Part Number	IEC Colors Part Number
3	408026-001	408026-002
5	403061-001	403061-002
10	401280-001	401280-002

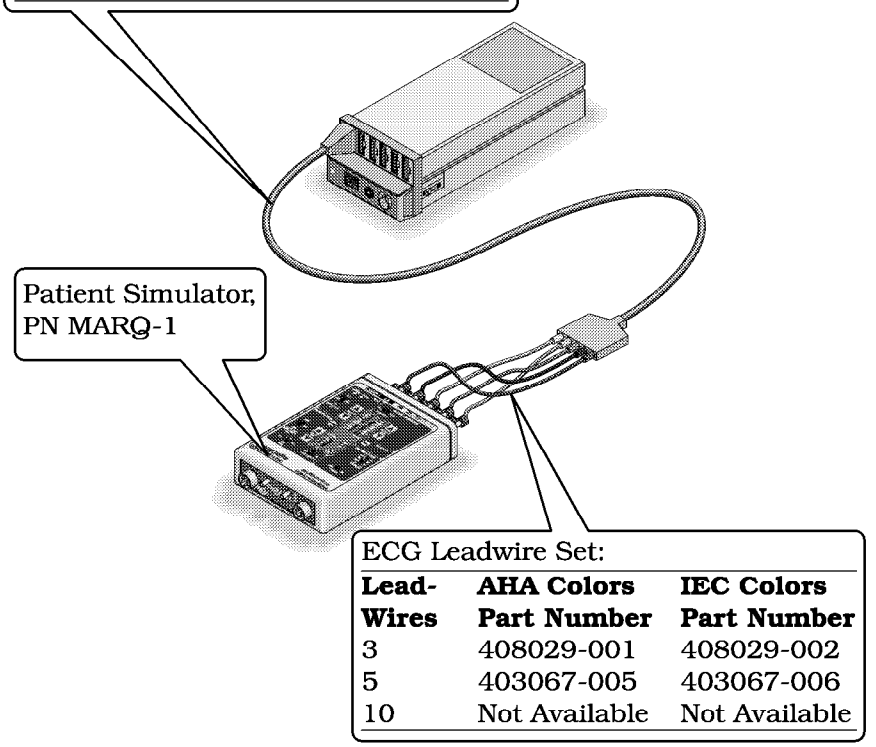

ECG Leadwire Set:

Lead-Wires	AHA Colors Part Number	IEC Colors Part Number
3	408029-001	408029-002
5	403067-005	403067-006
10	Not Available	Not Available

3. Admit a patient into system.
4. Make sure the following conditions are true:
   - The monitor displays ECG lead II, and it is noise-free.
   - The monitor displays an 80 ±1 bpm heart rate.
   - If the monitor has QRS tones are turned ON, an audible tone sounds with each QRS complex.
5. Make sure all seven ECG leads are available for display and they are noise-free.
6. Set DETECT PACE to NORMAL.
7. Inject a VP2 pacemaker pulse with the simulator.

8. Observe following with leads II, III, aVR, aVF, and V:
   - On the monitor, a P appears above the PVC count to denote pacemaker mode.
   - The monitor still shows an 80 ±1 bpm heart rate.
9. Remove the pacemaker pulse input and return the simulator to these conditions:
   - Set heart rate to 80 bpm.
   - Set amplitude to 1.0 mV.
10. Select lead II for display in the top trace position.
11. Remove the RA leadwire from the patient cable.
12. Observe following:
   - The monitor displays an RA FAIL message.
   - The monitor displays lead III in place of lead II.
13. Replace the RA leadwire.
14. Inject a 1-millivolt calibration pulse with the simulator and start a manual graph.
15. Observe that the calibration pulses are properly displayed and graphed, like in the example below.

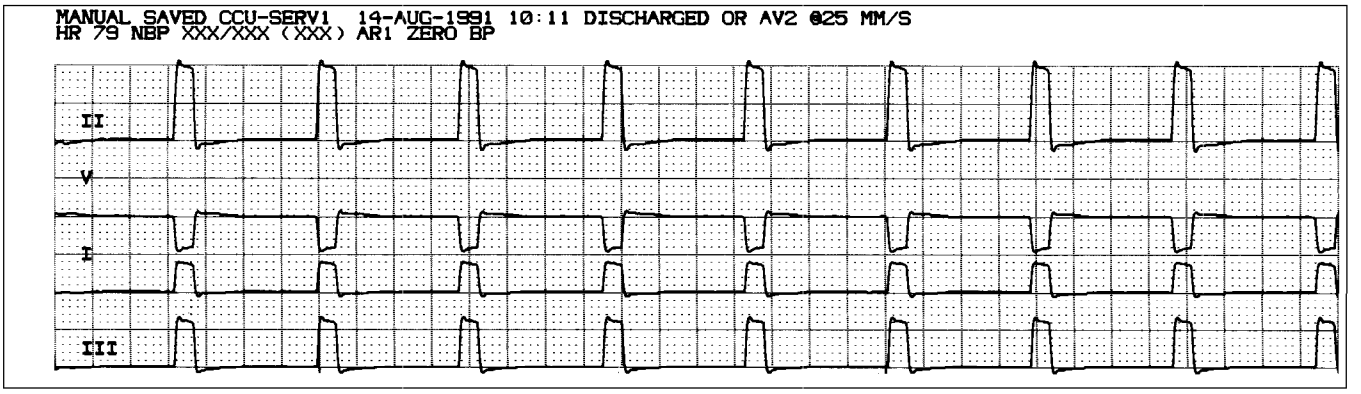

12SL ECG Test

This test is only necessary for SL-type Tram modules. It requires that the Tram module use version 7 (or later) software, and that the monitor uses a Tramscope 12 or 12C display with version 7 or 17 (or later), Series 7030 software.

1. At the monitor, return to the Main Menu.
2. Turn the Trim Knob control to highlight the ECG parameter box, and press the Trim Knob control to select it.

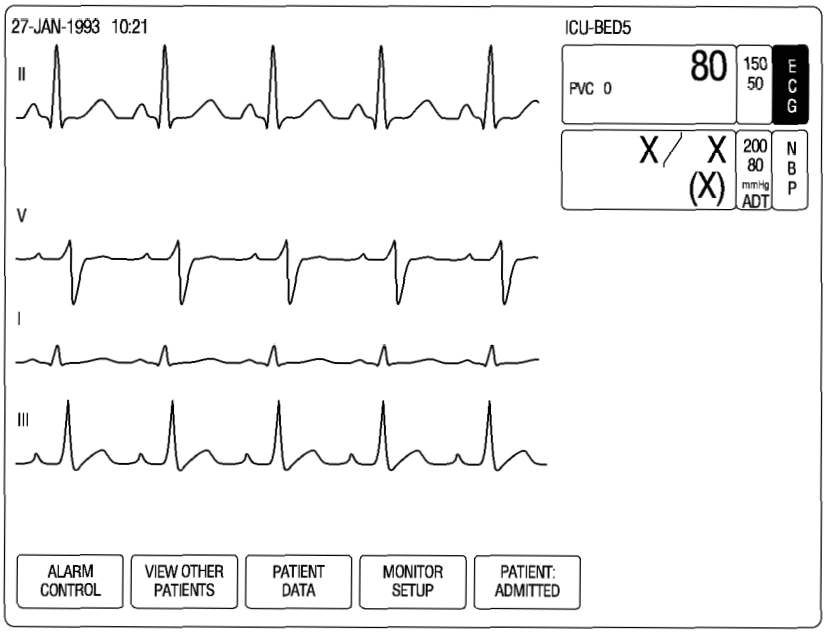

3. At the ECG menu, rotate the Trim Knob control to highlight 12 LEAD ECG ANALYSIS, and then press the Trim Knob control to select it.

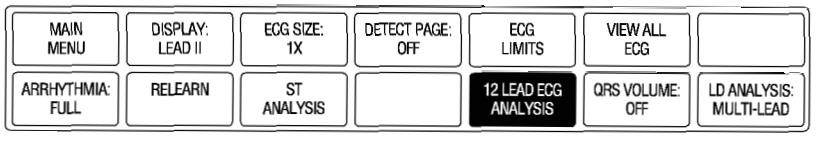

4. Make sure that all 12 ECG traces are noise-free, and they are displayed clearly.

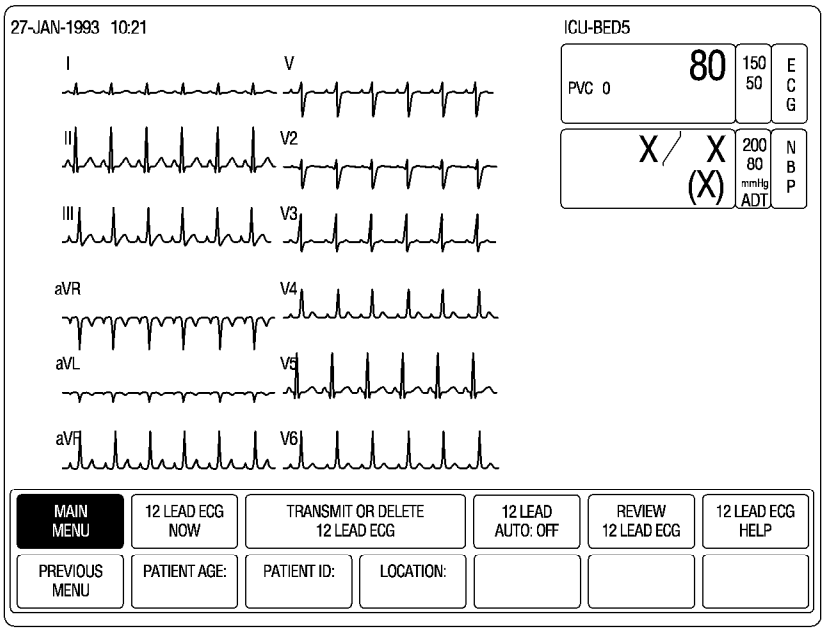

Respiration Test

1. Set up simulator like this:
   - Set baseline impedance to 750Ω.
   - Set ΔR to 0.5Ω.
   - Set lead select to I & II.
   - Set respiration rate to 30 breaths per minute.
2. Set up the monitor like this:
   - Turn the respiration waveform ON.
   - Set the respiration waveform to lead II.
3. Observe these conditions:
   - The monitor displays a distortion-free respiration waveform.
   - The monitor displays a respiration rate reading of 30 ±2 breaths per minute.
4. Set the respiration waveform to lead I at the monitor and observe the same conditions as in step 3.

Blood Pressure Test

1. Set up simulator like this:
   - Set polarity to POS.
   - Set output to 0 mmHg.
2. Connect a cable from the BLOOD PRESSURE 1 connector of the simulator to the left most BP connector (BP1) of the Tram module.

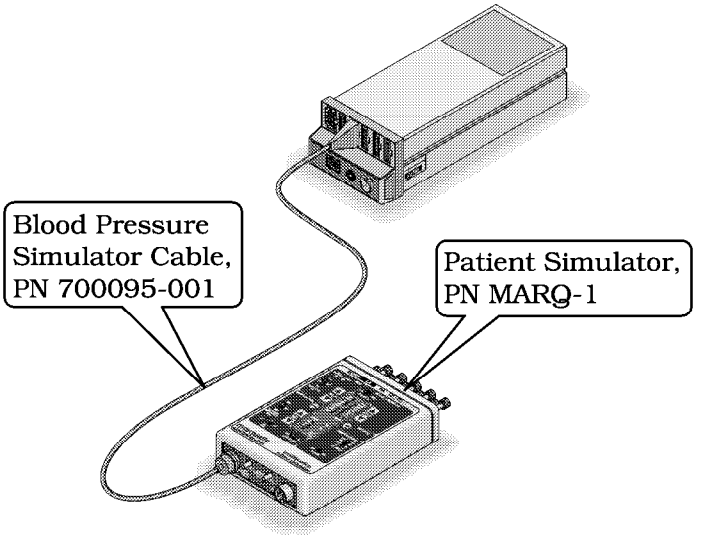

3. Observe an AR1 label and graticules on the monitor.
4. Zero the AR1 waveform.
5. Set the simulator to output 200 mmHg.
6. Observe a reading of 200/200 (200) ± 4 mmHg on the monitor.
7. Set the simulator to WAVE output.
8. Set the waveform gain on the monitor to auto.
9. Observe a distortion free waveform and a blood pressure reading of approximately 120/80 (93) on the monitor.
10. Remove the cable from the BP1 connector of the Tram module and insert it into the BP2 connector.
11. Observe a PA2 label and graticules on the monitor.
12. Set the simulator to output 0 mmHg.
13. Zero the PA2 waveform.
14. Repeat steps 5 through 9 of this test.
15. If you are testing a Tram 100A, 200A, or 200SL module, proceed to the TEMP Test.
16. Remove the cable from the BP1 connector of the Tram module and insert it into the BP3 connector.
17. Observe a CVP label and graticules on the monitor.
18. Set the simulator to output 0 mmHg.
19. Zero the CVP waveform.
20. Repeat steps 5 through 9 of this test.

21. If you are testing a Tram 400A or 400SL module, proceed to the TEMP Test.
22. Remove the cable from the BP1 connector of the Tram module and insert it into the BP4 connector.
23. Observe an LA label and graticules on the monitor.
24. Set the simulator to output 0 mmHg.
25. Zero the LA waveform.
26. Repeat steps 5 through 9 of this test.

Temperature Test

1. Set up the simulator for a 37˚C temperature output.
2. Attach a temperature sensor adaptor to the TEMP/CO connector of the Tram module.

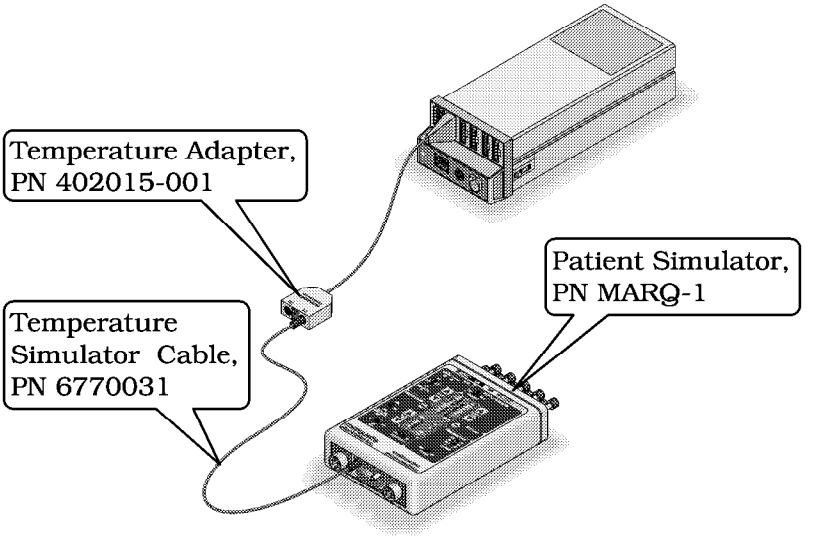

3. Set the switch on the adaptor to the 400 position.
4. Attach a cable from the SERIES 400 TEMPERATURE OUTPUT connector of simulator to the T1 connector of the temperature sensor adaptor.
5. Observe that a T1 reading appears on the display with reading between 36.6 and 37.4.
6. Move cable from the T1 connector of the temperature sensor adaptor to the T2 connector.
7. Observe that a T2 reading appears on the display with reading between 36.6 and 37.4.
8. Remove the temperature sensor adaptor and temperature cable from the Tram module and the simulator.

Cardiac Output Test

1. Connect a cardiac output cable adapter to the TEMP/CO connector of the Tram module and connect the CO adaptor to a cardiac output simulator II.

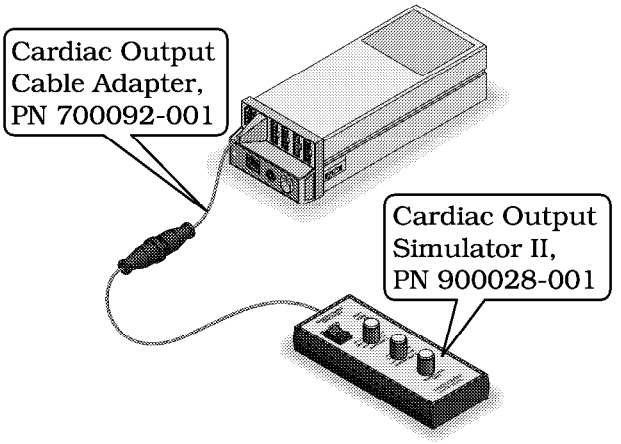

2. Set the cardiac output simulator to output the BT (blood temperature) readings in the following table and observe the correct readings on the monitor:

Table 5-4. Simulator Output Blood Temperature Settings

Simulator BT Setting	Monitor BT Reading Range
30.3˚C	30.1 – 30.5
35.1˚C	34.9 – 35.3
36.0˚C	35.8 – 36.2
37.0˚C	36.8 – 37.2
41.7˚C	41.5 – 41.9

3. Set the cardiac output simulator to output the IT (injectate temperature) readings in the following table and observe the correct readings on the monitor:

Table 5-5. Simulator Injectate Temperature Settings

Simulator BT Setting	Monitor BT Reading Range
0.0˚C	–0.3 – +0.3
8.0˚C	7.7 – 8.3
15.0˚C	14.7 – 15.3
24.0˚C	23.7 – 24.3
29.6˚C	29.3 – 29.9

SpO_2 Test

1. Turn the SpO_2 simulator power switch OFF.
2. Connect the simulator to the Tram module simulator cable. For Tram X50 modules, use the MEI or Nellcor square-style SpO_2 simulator cable, pn 700232-004, and for the Tram X00 modules, use the Ohmeda round-style SpO_2 simulator cable, pn 700323-002.

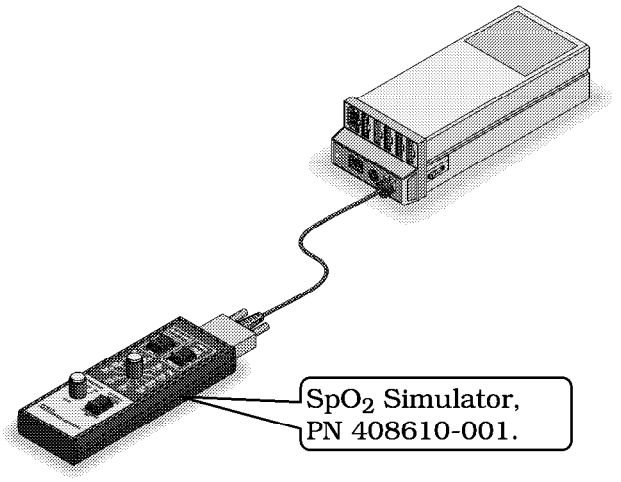

3. Set the simulator as follows:
   - Set the MODE to your type of probe (NELLCOR or OHMEDA).

   NOTE
   On the simulator, use the gold-colored values for OHMEDA and the white-colored values for NELLCOR. The OHMEDA values are presented in parentheses in this procedure.

   - Set the SpO_2% to 99.
   - Set the PRR to 100 beats/min.
   - Turn the power ON.
4. Verify the following are displayed at the monitor:
   - A sinusoidal waveform with an SpO_2 label.
   - An SpO_2% reading between 97 – 100% (97 and 102%).
   - A PRR reading between 97 and 103 beats per minute (it might be necessary to turn SpO_2 ON).
5. Test the accuracy of these SPO_2% settings.

Table 5-6. Accuracy of SpO_2 Settings

Simulator Setting	Displayed SpO_2 Value
99% (Both types)	97 – 100% (97 – 102%)
80.3% (84%)	78 – 82% (81 – 87%)
49.7 (63%)	48 – 52% (61 – 65%)

6. Test the accuracy of these PPR settings:

Table 5-7. Accuracy of PPR Settings

Simulator Setting	Displayed PPR Value
70	68 – 72
100	97 – 103
160	156 – 164

7. Return the simulator to these conditions:
   - Set the SpO_2% to 99.
   - Set the PPR to 100 beats/min.
8. Press the NOISE TEST button ON the simulator for 30 seconds.
9. Make sure the monitor still displays an SpO_2 value between 97 and 100% (97 and 102%), or an interference detection message is displayed.
10. Set these alarms on the monitor:
    - Set SpO_2% LO to 90.
    - Set PPR HI to 150.
11. Set PPR on the simulator to 160.
12. Make sure the PPR value on the monitor flashes, and it sounds an alarm.
13. Return PPR on the simulator to 100.
14. Set SpO_2% on the simulator to 80.3% (84%).
15. Make sure the SpO_2% value on the monitor flashes, and it sounds an alarm.
16. Turn the simulator OFF.
17. Make sure the monitor shows a CHECK PROBE message.
18. Disconnect the simulator cable from the Tram module.

NBP Tests

Insert the module in the top slot of a Tram-rac 4 housing or Series 70XX-type.

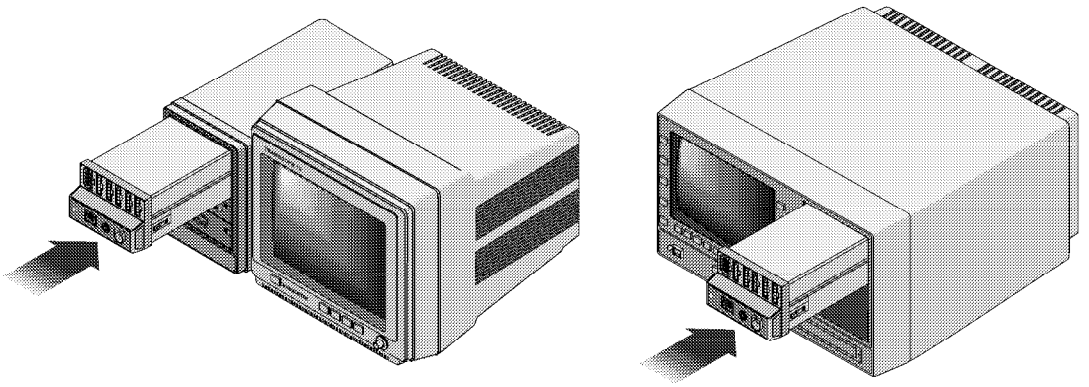

1. Disconnect all parameter cables
2. Apply power to the monitor. If your Tram-rac housing has its own power supply, apply power to it, too.
3. Enure POWER indicator on the Tram module's front panel is turned ON.

There are two different NBP calibration procedures: one for Tram modules used with Tram Critical Care monitors (Tramscope or Solar displays with Tram-rac housings), and one for Tram modules used with Series 70XX-type (7000, 7000RA, 7005, 7010, and 7010RA) monitors.

WARNING
When the NBP cuff is used in this procedure, it must be tightly wrapped around a tube. Never put the cuff around your arm during the calibration procedures. If you do put the cuff around your arm during this procedure, you will injure yourself.

1. Connect a manometer and NBP cuff to the NBP connector on the front of the Tram module as shown below.

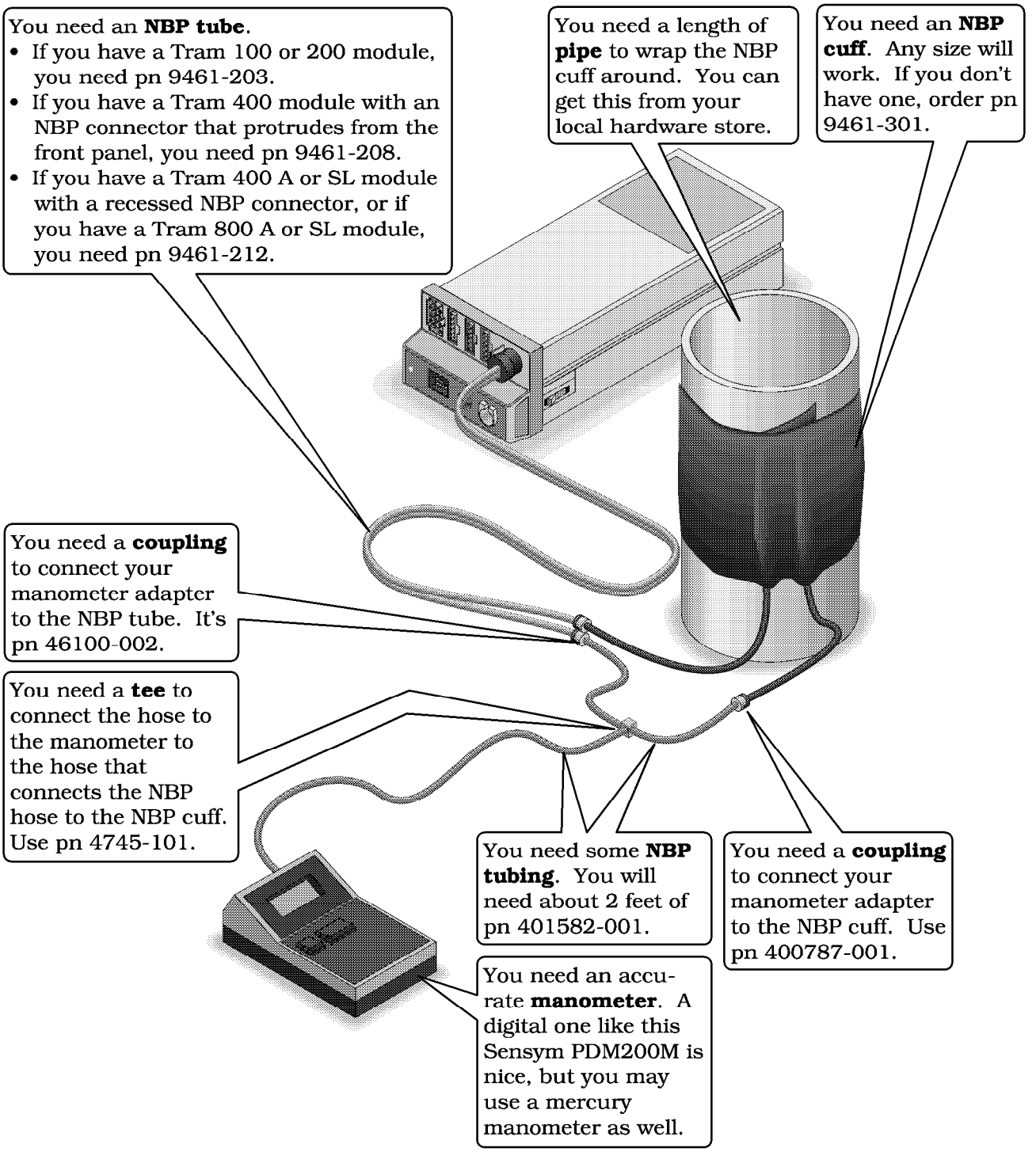

2. Turn the manometer ON, and set its range switch to the 1000 mmHg setting.

NBP Test for Tram Critical Care Monitors

Perform this test if you are using the Tram module with a Tram Critical Care monitor (Tramscope or Solar monitor). This procedure assumes you have either version 6, 7, or 17 software in your Tramscope/Solar display, Tram-rac housing, and Tram module.

1. From the Tramscope display's main menu, rotate the Trim Knob control to highlight CUSTOMIZE MONITOR (with version 6), or MONITOR SETUP (with version 7/17) and then press the Trim Knob control to select it.

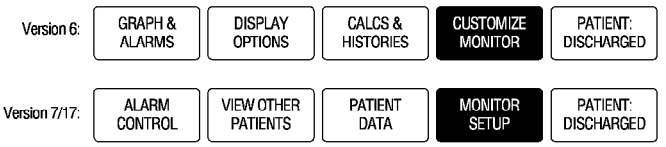

2. Rotate the Trim Knob control to highlight SERVICE MODE, and then press the Trim Knob control to select it.

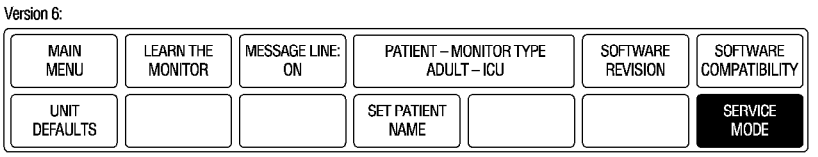

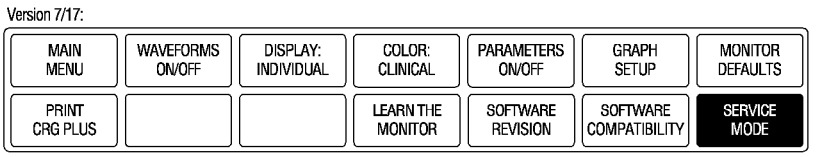

3. You have to enter a password to get into the service mode. The first two digits of the password are the day of the month, and the second two digits are the month. For example, on 7 March, the password would be 0703.
   - Rotate the Trim Knob control to highlight a password digit.
   - Press the Trim Knob control to select the password digit.
   - Rotate the Trim Knob control to change the value of the password digit.
   - Rotate the Trim Knob control to enter the password digit.
   - Repeat the steps above until all of the digits are entered.
   - Rotate the Trim Knob control to hilite SERVICE MODE from the menu.
   - Press the Trim Knob control to enter the service mode.

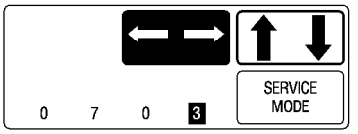

4. If you have version 6 software, rotate the Trim Knob control to highlight CALIBRATE NBP, and then press the Trim Knob control to select it.

   If you have version 7/17 software, rotate the Trim Knob control to highlight CALIBRATE, and press the Trim Knob control to select it. Then rotate the Trim Knob control to highlight CALIBRATE NBP, and press the Trim Knob control to select it.

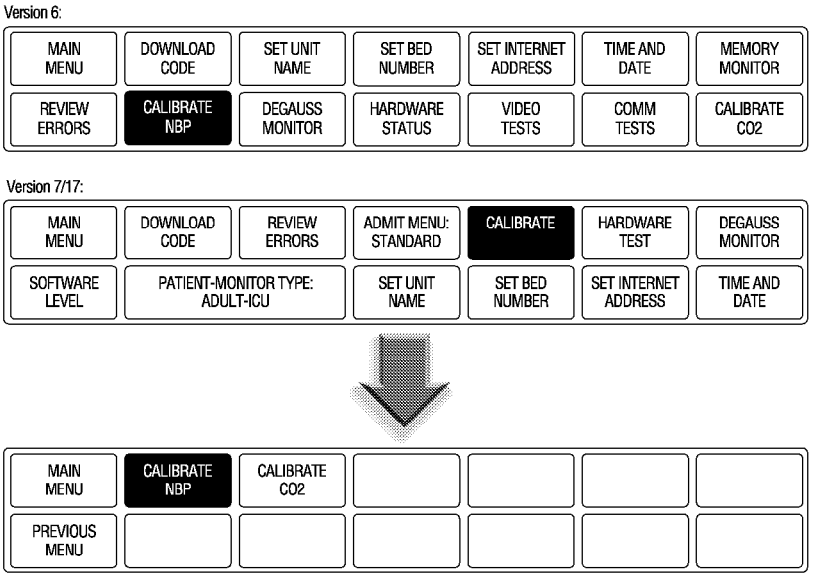

5. Rotate the Trim Knob control to highlight CHECK CAL OFF, and then press the Trim Knob control to select it.

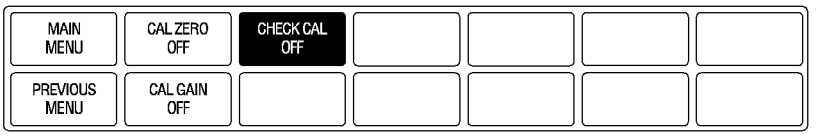

6. Rotate the Trim Knob control to highlight START, and then press the Trim Knob control to select it.

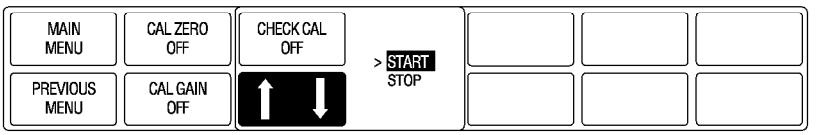

7. The text on the menu item will change from CHECK CAL OFF to CHECK CAL IN PROGRESS. Make sure that the pressure readings (shown as CUFF in the NBP parameter box) on the Tramscope display and manometer are equal (± 1 mmHg) for at least one full minute. If they are not equal, it means that you must calibrate the NBP parameter. Refer to "NBP Calibration" in Chapter 4: "Calibration."

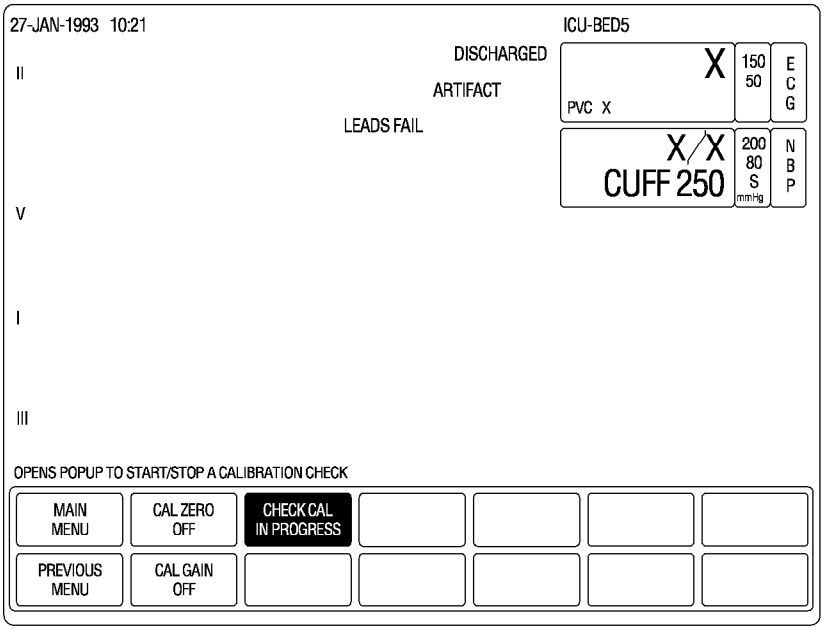

8. Rotate the Trim Knob control to highlight CHECK CAL IN PROGRESS, and then press the Trim Knob control to select it.

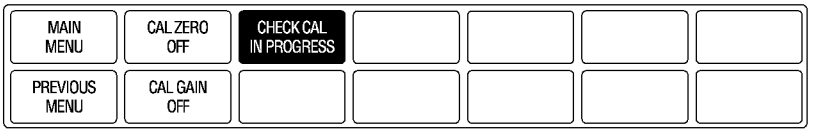

9. Rotate the Trim Knob control to highlight STOP, and then press the Trim Knob control to select it. The module then releases pressure in the bulb or cuff.

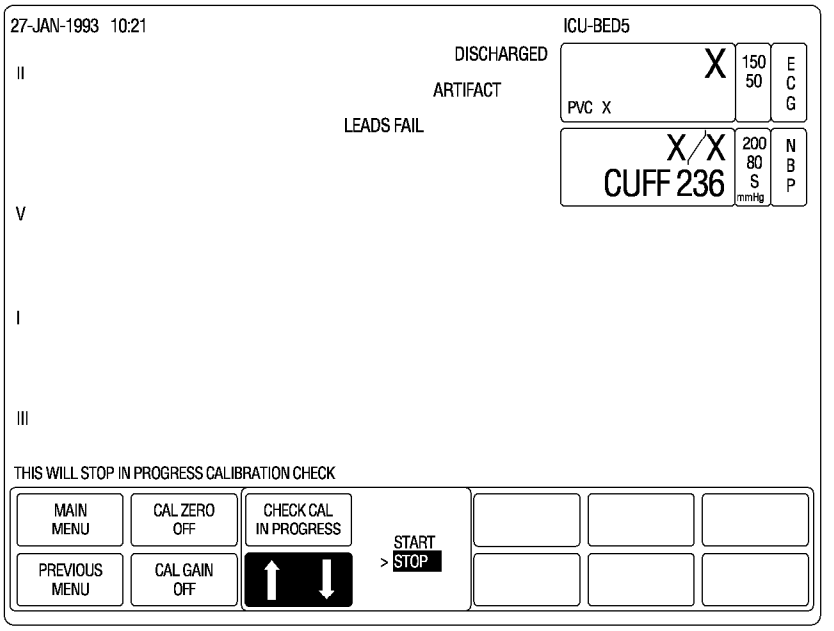

This completes the NBP calibration procedure. Remove the cuff and manometer from the Tram module.

NBP Test for Series 70XX Monitors

You should run this test if you use your Tram module with a Series 70XX-type monitor (Series 7000, 7000RA, 7005, 7010, or 7010RA monitors).

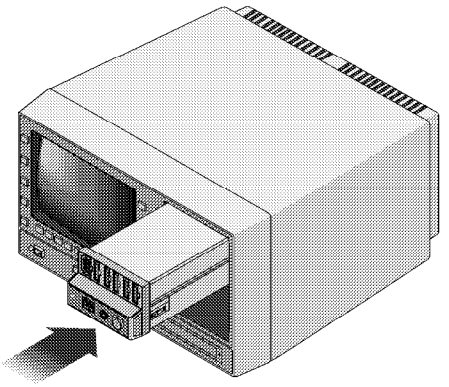

1. Press the SYSTEM key on the monitor.
2. Press the MONITOR SETUP, MONITOR SERVICE, and then CALIBRATE NBP soft keys. Soft keys are the unlabeled keys under the display. The function of each key appears on the display, just above the key.
3. If an NBP cuff is attached to the Tram module, remove it.
4. Press the YES soft key.
5. Press the TEST CAL soft key and verify that the pressure readings on the monitor and manometer are equal (± 1 mmHg) for at least one minute. If they are not equal, it means that you must calibrate NBP (that procedure starts on page 36).
6. Press the TEST CAL soft key to stop the test.
7. Press the CLEAR key.

This completes the NBP calibration procedure. Remove the cuff and manometer from the Tram module.

DEFIB SYNC Test

1. Connect an oscilloscope to the DEFIB SYNC connector on the front panel of the Tram module.
2. Test the ECG, Arterial BP, and Marker Out signals from the DEFIB SYNC connector. They should closely resemble the waveforms in the figure below. Note that there are two Marker Out traces shown. The top trace shows the frequency of the pulses; the bottom trace shows the pulse width.

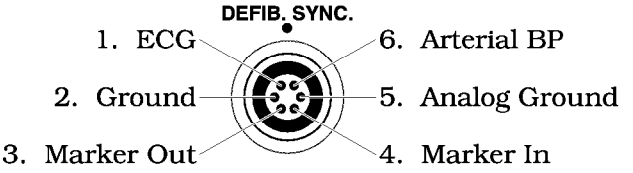

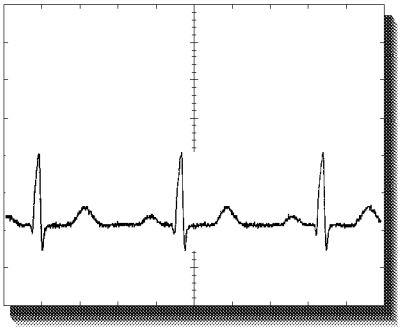

ECG
Signal Pin:1
Ground Pin:5
Probe Type:
x10
Time/
Division:0.2S
Volts/
Division:0.5V

Marker Out
Signal Pin:3
Ground Pin:2
Probe Type:
x10
Time/
Division:0.2S
Volts/
Division:1V

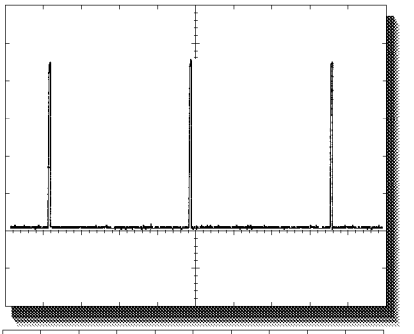

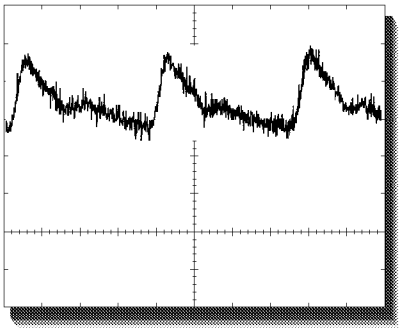

Arterial BP
Signal Pin:6
Ground Pin:5
Probe Type:
x10
Time/
Division:0.2S

Marker Out
Signal Pin:3
Ground Pin:2
Probe Type:
x10
Time/

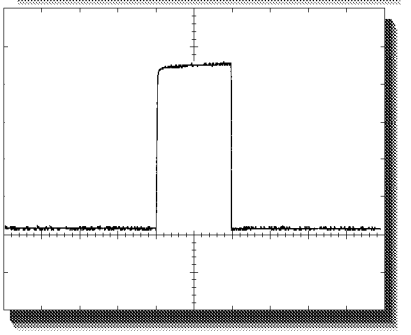

3. Attach a jumper between pin 3 (Marker Out) and pin 4 (Marker In) of the DEFIB SYNC connector and observe negative spikes in the R-waves of the displayed ECG waveforms.

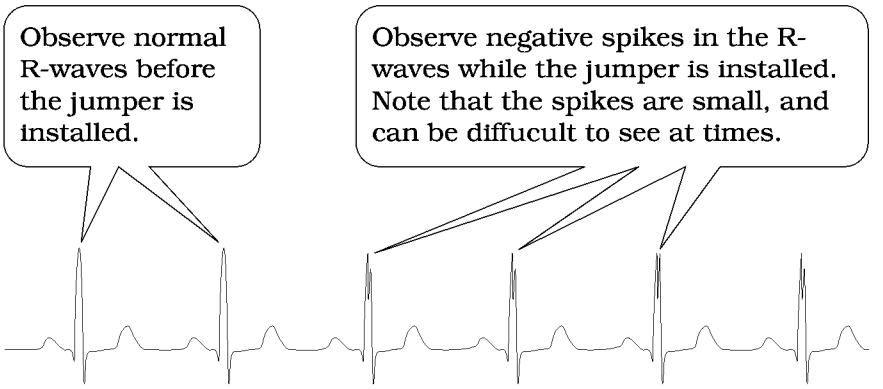

4. Remove the jumper.

Fan Test

Listen for the fan. The fan should be running whenever the Tram module is installed in a bedside monitor.

Transport Test

1. Connect the Tram module to a transport display. Make sure there are batteries on the rear of the display, and that the batteries are sufficiently charged.

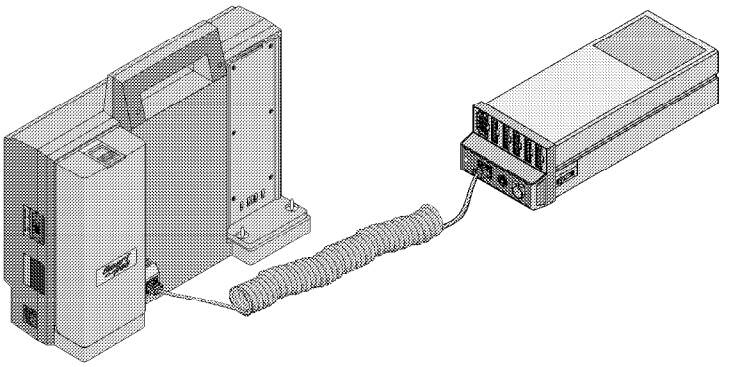

2. Remove the Tram module from the bedside monitor.
3. Set up simulator like this:
   - Set heart rate to 80 bpm.
   - Set amplitude to 1.0 mV.
4. Observe the following:
   - No error messages are shown on the transport display.
   - The transport display shows ECG lead II, and it is noise-free.
   - The transport display shows a heart rate of 80 ±1 bpm.
   - If the QRS tones are turned ON, an audible tone sounds with each QRS complex.
5. Make sure that you can display all of the available ECG leads.

Completion

1. Turn all test equipment OFF.
2. Remove all test cabling from the Tram module.

Domestic Electrical Safety Tests

Test Frequency

We recommend electrical safety tests be performed:

- upon receipt of the module,
- every six months thereafter, and
- each time the module is open or repaired.

Remember to record the date and results on the "Maintenance/ Repair Log" included at the end of this chapter.

WARNING
Failure to perform leakage tests may cause undue equipment failure and possible health hazards. Marquette Electronics, Inc does not in any manner, unless an Equipment Maintenance Contract exists, assume the responsibility for performing this recommended safety test. The sole responsibility rests with the individual or institution using the equipment. Marquette service personnel may, at their discretion, use this procedure as a helpful guide during visits to the equipment site.

Required Tests

To help you establish a systematic maintenance routine, Marquette Electronics recommends that you perform all safety tests presented in this chapter

These instructions are intended for every module in the system. If the Tram-rac housing does not have its own power supply, it should remain connected to the monitor during the safety tests. Listed below are the safety tests.

- AC Line Voltage Test; This test verifies that the domestic wall outlet supplying power to the equipment is properly wired.
- Ground Continuity Test; This test verifies continuity between all the exposed metal surfaces of the monitor and the ground prong on the mains AC power cord.
- Hi-Pot Tests; These tests are mandatory when a module is opened or repaired.
- Leakage Current Tests; These tests are performed after the hi-pot tests.

If a module under test fails the leakage tests, do not allow the unit to return to service. Call Tech Support for assistance. (Refer to "How to Reach Us" in Chapter 1: "Introduction."

Test Conditions

All electrical safety test may be performed under normal ambient temperature, humidity, and pressure conditions.

AC Line Voltage Test

This test verifies that the domestic wall outlet supplying power to the equipment is properly wired. For international wiring tests, refer to the internal standards agencies of that particular country.

120 VAC, 50/60 Hz

Use a digital voltmeter to check the voltages of the 120-volt AC wall outlet (dedicated circuit recommended). If the measurements are significantly out of range, have a qualified electrician repair the outlet. The voltage measurements should be as follows:

1. 120 VAC (± 10 VAC) between the line contact and neutral and between the line contact and ground.
2. Less than 3 VAC between neutral and ground.

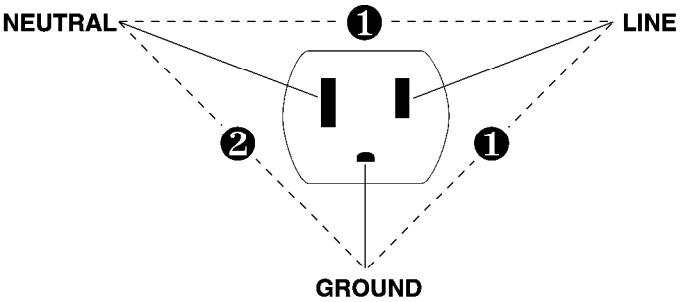

240 VAC, 50/60 Hz

Use a digital voltmeter, set to measure at least 300 VAC, to check the voltages of the NEMA 6-20R, AC wall outlet (dedicated circuit recommended). If the measurements are significantly out of range, have a qualified electrician repair the outlet. The voltage measurements should be as follows:

1. 120 VAC (± 10 VAC) between either “hot” contact and ground.
2. 210 to 230 VAC between the two “hot” contacts.

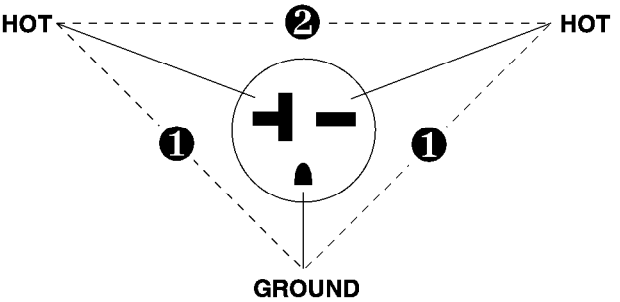

Ground Continuity Test

This test verifies continuity (less than 100 mΩ resistance) between all the exposed metal surfaces, which have the potential to become energized, and the ground prong on the mains AC power cord. If the metal surfaces are anodized or painted, scrape off a small area in an inconspicuous area for the probe to make contact with the metal.

You will require a digital multimeter (DMM) to check all the metal surfaces of the unit. Make adjustments for any resistance from the test leads.

Do the following steps in the order given.

1. Disconnect each monitor and, if applicable, Tram-rac housing with its own power supply from all power sources. A Tram-rac housing without its own power supply should remain connected to the monitor.
2. Connect the negative lead of the DMM to the ground prong of the power cord plug.
3. Set the DMM to the milli-ohm range.
4. Connect the positive lead of the DMM to any exposed metal surface on the unit under test.
5. The reading should be less than 100 milli-ohms.

   If the readings are not less than 100 milli-ohms, the unit has failed this test.

   - Check for breaks in the power cord or in the internal connections within the monitor.
   - Perform repairs and retest before using the unit on a patient.

Current Leakage Tests

Preparation

The leakage current tests are safety tests to ensure that the equipment poses no electrical health hazards. It is recommended after performing the hi-pot tests.

WARNING
Failure to perform leakage tests may cause undue equipment failure and possible health hazards. Marquette Electronics, Inc does not in any manner, unless an Equipment Maintenance Contract exists, assume the responsibility for performing this recommended safety test. The sole responsibility rests with the individual or institution using the equipment.

Required Tools/ Equipment

You will need the special tools and items listed below. Equivalent equipment may be substituted if necessary.

Table 5-8. Required Tools/Equipment

Item	Manufacturer	Part Number
Leakage current tester 120 V (or equivalent) 240 V (or equivalent)	MEI	MT-1216-01 MT-1216-02
Digital multimeter (DMM)	Fluke	8060A
ECG test body	MEI	97516-100
SpO_2	MEI	MT-4366

NOTE
The accuracy of the leakage tests depends on a properly-wired wall outlet. Do not proceed until you verify the integrity of the power source.

Current Limits

Use the table below to determine the maximum allowable leakage currents. For international leakage limits, refer to the internal standards agencies of that particular country.

Table 5-9. Maximum Allowable Leakage Currents

	Test	Maximum Current
1	Patient-Cable-Leakage-to-Ground Ground closed, normal & reverse polarity	10 µA for 120 V 10 µA for 240 V
2	Patient-Cable-Leakage-into-Patient Leads Ground closed, normal & reverse polarity	10 µA for 120 V 50 µA for 240 V

Patient-Cable-Leakage to-Ground Test

This test checks leakage current from the patient cable connector of the module to ground.

1. Install the module in a a Tram-rac 4 housing or Series 70XX-type monitor.
2. Connect the monitor power cord to the power outlet on the leakage tester.
3. With the power switch of the leakage tester off, connect the power cord of the leakage tester to a correctly wired and properly grounded ac power outlet.
4. Set leakage tester switches as follows:
   a. Set the selector knob to 3.
   b. Set the GND switch to GND OPEN.
   c. Set the polarity switch to NORM.
   d. Set the power switch to OFF.
5. Connect an appropriate test body to the connector of the module.
6. Connect a short length of cable between the test body installed in the last step and the jacks on the top of the leakage tester.
7. Set the leakage tester's power switch to ON.
8. Set the monitor's rear panel power switch to ON.
9. Read the leakage current indicated on the DMM.

If the reading is greater than 10 microamperes (10 millivolts on the DMM), the module fails this test and should be repaired and tested again.

Partial Schematic Diagram

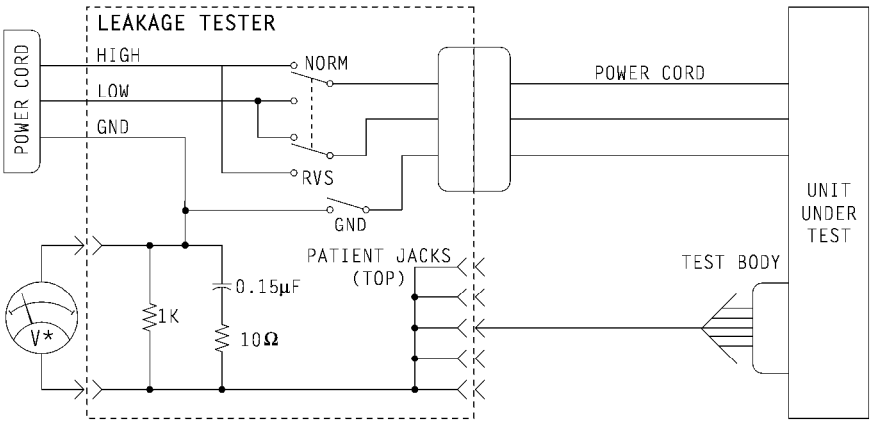

1-mV meter reading = 1-µA leakage current

10. Change the leakage tester polarity switch to the RVS position.
11. Read the leakage current indicated on the DMM.

    If the reading is greater than 10 microamperes (10 millivolts on the DMM), your module fails this test and should be repaired and tested again.

12. Change the GND switch to the CLOSED position.
13. Read the leakage current indicated on the DMM.

    If the reading is greater than 10 microamperes (10 millivolts on the DMM), your module fails this test and should be repaired and tested again.

14. Change the leakage tester polarity switch to the RVS position.
15. Read the leakage current indicated on the DMM.

    If the reading is greater than 10 microamperes (10 millivolts on the DMM), your module fails this test and should be repaired and tested again.

16. For Tram X50 modules, repeat steps 4 through 15 with the SpO_2 test body int he blue SpO_2 connector.
17. Set the power switch of the leakage tester to OFF.

Patient-Cable-Leakage-into-Patient Leads Test

This tests the patient cable leakage current from a 115 or 220V AC source into the connector of the module.

1. Set the leakage tester switches like this:
   a. Set the selector knob to 5.
   b. Leave the GND switch set to CLOSED.
   c. Set the polarity switch to NORM.
2. Disconnect the cable between the leakage tester and the test body, and reconnect it between the test body and the PATN JACK connector on the front panel of the leakage tester.

WARNING
The following step will cause high voltage to appear at the PATN JACK on the leakage tester.

3. Set power switch on the leakage tester to ON.
4. Read leakage current indicated on DMM.
   - For 115 V/60 Hz power: 10 microamperes (10 millivolts on the DMM)
   - For 220 V/50 Hz power: 50 microamperes (50 millivolts on the DMM)

   If your module fails this test, it should be repaired and tested again.

Partial Schematic Diagram

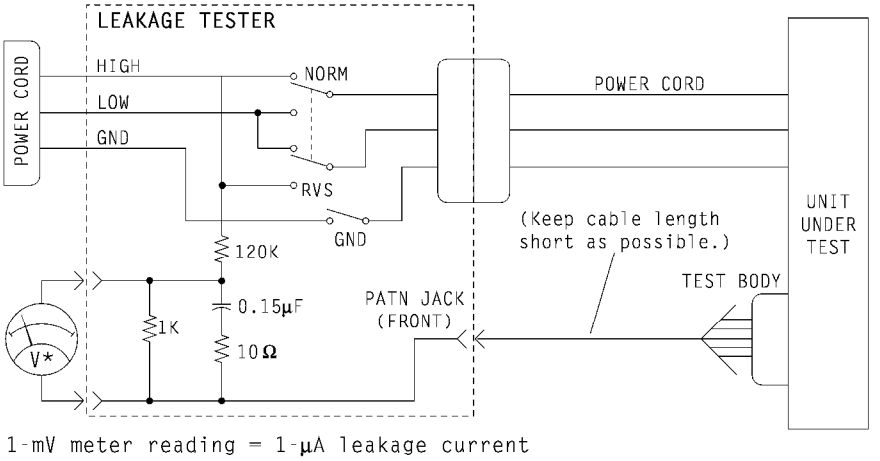

5. Change the leakage tester polarity switch to the RVS position.
6. Read the leakage current indicated on the DMM.

   If the reading is greater than the following, your module fails this test and should be repaired and tested again.

   - For 115 V/60 Hz power: 10 microamperes (10 millivolts on the DMM)
   - For 220 V/50 Hz power: 50 microamperes (50 millivolts on the DMM)
7. For Tram X50 modules, repeat steps 1 through 6 with the SpO_2 test body int he blue SpO_2 connector.

Completion

1. Set the power switch on the leakage tester to OFF and disconnect all test equipment from the module.
2. Disconnect the monitor power cord from leakage tester.
3. Disconnect the tester from the power outlet.

Hi-Pot Tests

Preparation

Hi-pot (high-potential) tests protect the patient from possible electrical health hazards. They are recommended for any patient-connected devices that are repaired to ensure patient isolation after the repair.

Test Frequency

This test is required each time a module is opened or repaired.

WARNING
Failure to perform hi-pot tests may cause undue equipment failure and possible health hazards. Marquette Electronics, Inc does not in any manner, unless an Equipment Maintenance Contract exists, assume the responsibility for performing this recommended safety test. The sole responsibility rests with the individual or institution using the equipment.

Required Tools/ Equipment

Equipment required to perform the test is listed below. Equivalent equipment may be substituted if necessary.

Table 5-10. Required Tools/Equipment

Item	Manufacturer	Part Number
AC/DC hi-pot generator	Hipotronics	AD125
ECG test body	MEI	97516-100
Hi-pot cable	MEI	97516-101
Bendix connector (used to make test connector)	MEI	1866-030

Generator Setup

Follow these steps in the same order in which they are listed.

1. Set up the AC/DC hi-pot generator:
   a. Turn the power switch to ON.
   b. Set the VOLTAGE RANGE selector to MEDIUM.
   c. Set the RAISE VOLTAGE selector to 0 volts.
   d. Set the OUTPUT & CURRENT selector to the 5 mA range.
   e. Allow the unit to warm up for 15 minutes before proceeding with this test.
2. If the module to be tested is installed in a monitor, remove it from the monitor.

Ground Connection

Connect all of the ground pins at the rear panel connector on the module to the GROUND of the AC/DC hi-pot generator using the hi-pot cable.

1. A grounding test connector must be made to connect all pins at the rear connector of the module together. Use test connector, pn 1886-030, to fabricate a grounding test connector.
2. Securely attach ground clip from AC/DC Hi-Pt Generator to grounding test connector.

High Voltage Connection

The module parameter determines the test body used. Install ECG test body to connector at the front of the module.

AC Hi-Pot Test

Perform this test on the ECG input of the Tram module. Never attempt to perform this test on any of the other connectors.

WARNING
Never attempt to perform this test on any of the other connectors.

1. Install the ECG test body into the connector of the module.
2. Connect one end of a high voltage lead to the exposed lead of the test body.
3. Connect the other end of the high voltage lead to the AC OUT connector of the AC/DC hi-pot generator.

WARNING
In the following step, high voltage appears at the test body.

4. Set the HIGH VOLTAGE switch to ON. The high voltage indicator light should illuminate.

WARNING
During test, watch that the analog meter to ensure current never exceeds 1 mA. If it does, the unit has failed the test.

5. Slowly turn the RAISE VOLTAGE selector to 3000 volts.
6. Wait for 10 seconds. If the breakdown warning lamp or buzzer activate before the time expires, then the unit has failed the test.
7. Slowly turn the RAISE VOLTAGE selector to 0 volts.
8. Set the HIGH VOLTAGE switch to OFF. The high voltage indicator should turn off.
9. If your module fails this test, make the necessary repairs and test it again.
10. Perform the DC hi-pot test.

DC Hi-Pot Test

The following procedure should only be performed on the ECG connector. Follow these steps in the order listed.

1. Set the AC/DC hi-pot generator OUTPUT & CURRENT selector to the x 100 DC range.
2. Remove the high voltage lead from the AC OUT connector and connect it to DC OUT connector.

WARNING
In the following step, high voltage appears at the test body.

3. Set the HIGH VOLTAGE switch to ON. The high voltage indicator should glow.
4. Slowly turn the RAISE VOLTAGE selector to 6000V dc.
5. Wait for 1 second. If the breakdown warning lamp or buzzer activates before the time expires, then the unit has failed the test.
6. Slowly turn the RAISE VOLTAGE selector to 0 volts.
7. Set the HIGH VOLTAGE switch to OFF. The high voltage indicator should turn off.
8. If your Tram module passed the test, disconnect all cables and perform the Current Leakage Tests, listed earlier in this chapter.
9. If your Tram module failed the test, make the necessary repairs and test it again.

Repair Log/PM Inspection Form

Unit Serial Number:

Institution Name:

Date	Maintenance/Repair	Technician

Tram 100 - 850 A/SL Modules

MPMFRM-002D
31 JUL 1995

Preventive Maintenance Inspection Form

(See Service Manual p/n 404422-001 Tram 100 - 600, p/n 404422-065 Tram 100 - 850 A and SL for Details)

Customer _____ Customer Number _____ Date _____

FE _____ FE ID _____ Call Number _____

Equipment Serial Number _____ Software Revision _____

Module Type

❑ Tram 100 ❑ Tram 200 ❑ Tram 250
❑ Tram 300 ❑ Tram 400 ❑ Tram 450
❑ Tram 500 ❑ Tram 600 ❑ Tram 650
❑ Tram 800 ❑ Tram 850
❑ "A" Series ❑ "SL" Series

Tools Required

Leakage tester, Multimeter, Oscilloscope
CO simulator II, Marq1 simulator, Manometer
NIBP cuff, SpO_2 simulator, Nicolay adapter cables
Standard hand tools, Anti-static mat and strap

Visual Inspection

Inspect the following for excess wear and /or any visual signs of damage
❑ General ❑ Latches ❑ Connectors
❑ Cable insulation ❑ Reseat socketed components / connectors

Calibration

❑ NIBP

Electrical Safety Tests

❑ Customer will perform Electrical Safety tests

		Open		Closed	
		Normal	Reversed	Normal	Reversed
ECG	Patient Source Risk leakage (<10µA)	____µA	____µA	____µA	____µA
	Patient Sink Risk leakage (<10µA without patient cable)	N/A	N/A	____µA	____µA
SpO_2 (for X50 series modules only)	Patient Source Risk leakage (<10µA)	____µA	____µA	____µA	____µA
	Patient Sink Risk leakage (<10µA without patient cable)	N/A	N/A	____µA	____µA

Checkout Procedure

ECG
❑ Rate (±1) ❑ All leads noise free ❑ Pace
❑ Leads fail ❑ Amplitude ❑ 3 Lead(A and SL Series)

RESP
Base line of 750Ω - ΔR 0.5Ω - 30 breaths per minute
❑ Rate lead II (± 2) ❑ Noise free lead II
❑ Rate lead I (± 2) ❑ Noise free lead I

BP
(2% or ±1mmHg whichever is greater)
❑ Static BP1 ❑ Dynamic BP1 ❑ Noise free BP1
❑ Static BP2 ❑ Dynamic BP2 ❑ Noise free BP2
❑ Static BP3 ❑ Dynamic BP3 ❑ Noise free BP3
❑ Static BP4 ❑ Dynamic BP4 ❑ Noise free BP4

Tram 100 - 850 A/SL Modules

MPMFRM-002D
Page 2

Checkout Procedure Cont.

TEMP / CO The temperature tolerance for all Tram 100-850 A and SL Series modules is ±0.1°C. Tolerances for Tram 100-600 modules are specified below.
[❑ T1 ←——→ ❑ T2] (YSI 400, 1% or ±0.3°C whichever is greater)
❑ BT range (± 0.2°C) ❑ IT range (± 0.3°C)

SpO_2 ❑ %SpO_2 range (90 - 100, 2.5%), (80 - 89.9, 3.1%), (60 - 79.9, 3.4%)
❑ PPR range (2.7%) ❑ Noise

NIBP ❑ Pump (Inflate an Adult Cuff with the bladder folded in half in <30 Sec.)
❑ Leak (<1mmHg per 4 Sec.) ❑ Static (±1 mmHg)

Analog Output Use Pin 2 for Marker Out ground and Pin 5 for Analog ground

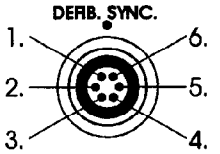

❑ Pin 1 ECG ❑ Pin 6 Arterial BP ❑ Pin 3 Defib Sync
❑ Marker In (Short Pin 3 to Pin 4 Look for negative pulse on the R wave.)

To test Analog Output from the rear connector of a Tram 100 - 800 module check the following waveforms at a Tram RAC.

Pin 8 Ground

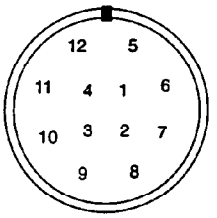

Rac 3 / Rac 4

Pin 1 Ground

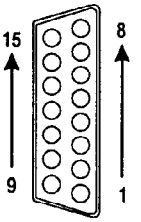

Rac 4A

❑ ECG II	Pin 1	Pin 9
❑ Trace 1	Pin 2	Pin 2
❑ ECG V	Pin 3	Pin 10
❑ ART (or BP1)	Pin 4	Pin 5
❑ BP 2 (or SpO_2 Wave)	Pin 5	Pin 13
❑ BP 3 (or SpO_2 Value)	Pin 6	Pin 3
❑ BP 4 (or Resp)	Pin 7	Pin 11

General ❑ Transport test ❑ No LCD error messages
❑ Fan

Comments

Please comment on any other environmental conditions (Static, Temperature, AC Power, Etc..) that may affect operation or reliability.

_____

_____

Briefly describe all repairs / adjustments made and list all parts replaced.

_____

_____

_____

Customer Signature _____ FE Signature _____

Marquette Electronics, Inc Service and Supplies Division Jupiter,FL 33468-9100

6 CONNECTIONS

External Connectors **6-2**
Blood Pressure Connector 6-2
DEFIB SYNC Signals 6-3
Display Connector 6-4
ECG/RESP Connector 6-5
Rear Connector 6-5
MEI/Nellcor SpO_2 Connector 6-7
Ohmeda SpO_2 Connector 6-8
TEMP/CO Connector 6-9

External Connectors

Pin-by-pin descriptions and the signal names for each connector on the front panel and rear of the module are described in this section. Each module uses a “bristle brush” connector to interface to the backplane of the Tram-rac 4 housing or Series 70XX-type monitor (Series 7000, 7000RA, 7005, 7010, or 7010RA) monitor.

Blood Pressure Connector

Invasive blood pressure transducers connect to the Tram modules at the BP connectors. The BP connectors are all functionally the same, so the following information applies to all Tram module BP connectors.

If you want to use your existing blood pressure cables and transducers with the Tram modules, but they use different connectors, we offer these termination kits:

- Abbott Transpac II cables use pn 700074-001
- Abbott Transpac III cables use pn 700075-001
- American Edwards cables use pn 700076-001
- Spectramed cables use pn 700077-001
- Utah cables use pn 700078-002

Tram X00 Modules/Eagle Monitor Termination Instructions for BP, CO, and TEMP Cables, pn 403799-016, describes how to terminate these cables.

Table 6-1. BP Front Connector

Pin	Name	Type
1	BP_EXC+	Positive excitation voltage (output)
2	BP_SIGNAL+	Positive analog pressure signal from transducer
3	NC	
4	ISO_ANALOG_GND	Isolated analog ground reference
5	NC	
6	SHIELD	Cable shield
7	BP_EXC–	Negative excitation voltage (output)
8	BP_SIG–	Negative analog pressure signal from transducer
9	NC	
10	INVBP_ID	When you connect this pin to ISO ANALOG GND (pin 4), the monitor show the BP trace for this connector
11	NC	

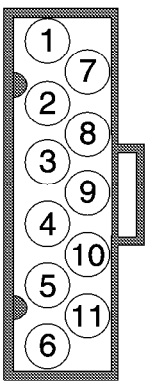

Front View of Red-Colored BP Connector

The schematic diagram of the blood pressure probe sensor is presented below.

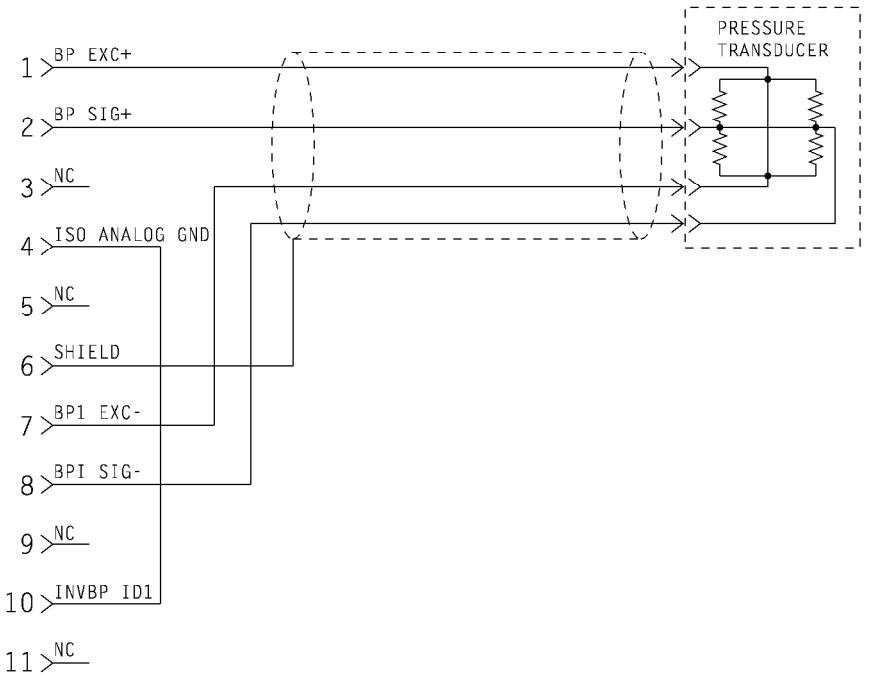

DEFIB SYNC Signals

The DEFIB SYNC connector carries signals for interfacing with a defibrillator. It also has analog output signals for ECG traces. If you need to connect a defibrillator with the module, a 15-foot defibrillator cable, pn 403936-001, is available. It has a DEFIB SYNC connector on one end and it is unterminated at the other end.

Table 6-2. DEFIG SYNC Connector

Pin	Name	Description
1	ECG	An ECG x1000 analog output for the top displayed ECG trace
2	GND	Digital ground reference for MARKER IN and MARKER OUT
3	MARKER_OUT	This normally low output goes positive on the ECG R wave. It is used by some defibrillators to avoid firing during the T-wave. Jumpers on the module processor PCB, pn 800210, select the amplitude (5V or 15V) and pulse width (10 mS or 100 mS) are selectable by the software available in the host monitor menu. See Chapter 4: “Calibration” for details.
4	MARKER_IN	On positive edges of this input, the monitor and DDW display a marker on the ECG waveform. It is usually used to record the time of defibrillation.
5	ANALOG_GND	Analog ground reference for the ECG and BP outputs.
6	BP	A 10mV/mm Hg blood pressure analog output for the top ART trace. If there is no ART trace, it is for the BP1 trace. If the signal is not zeroed, this pin outputs a 60-Hz, 1 Vp-p triangle wave.

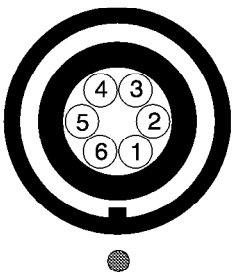

Front View of Module

Display Connector

The DISPLAY connector carries communication and power signals between the Tram module and a transport display. Note that the Tram module must be connected to the connector on the rear of the transport display. If you plug it into one of the side connectors, a large COMMUNICATION FAILURE message will appear.

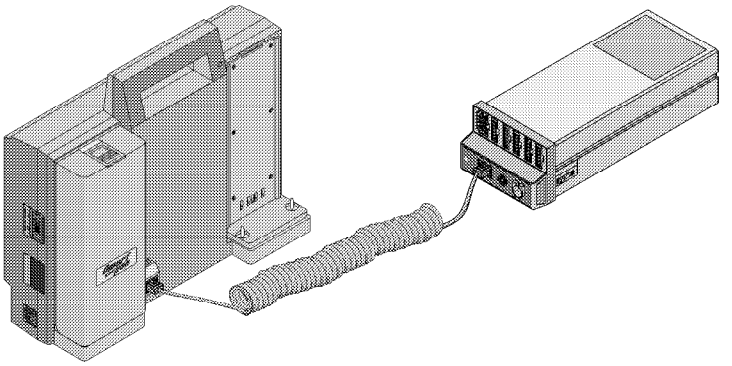

You can use any of these cables to connect your Tram module to a transport display:

Table 6-3. Display Cables

Part Number	Length (Feet)	Length (Meters)
403495-001	10	3
403496-001	15	4.6
406468-002	25	7.6
406468-001	40	12.2

Table 6-4. ECG/RESP Connector

Pin	Name	Description
1	DLK_TXD+	RS422 output[1]
2	DLK_TXD–	RS422 output[1]
3	DLK_RXD+	RS422 input[1]
4	DLK_RXD–	RS422 input[1]
5	PWRRTN	Power Bus and +16.5V ground
6	SENSE_OUT	The transport display connects this signal to PWRRTN to turn the Tram module on.
7	+16.5V	A 16.5-volt output that powers the transport display when you install the Tram module in a monitor.
8	PWRBUS	A 10 to 16.75-volt power input from the transport display.

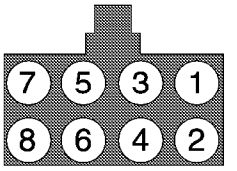

Front View of Module

[1]NOTE: 38.4k b/s, 8 bit, no parity, 1 stop bit.

ECG/RESP Connector

ECG patient cables attach to the ECG/RESP connector. In addition to the ECG leadwire, the signals on this connector include a 52.6-kHz respiration carrier.

Table 6-5. ECG/RESP Connector

Pin	Name	Description
1	RA	Right arm limb leadwire
2	V2	V2 chest leadwire
3	V3	V3 chest leadwire
4	LA	Left arm limb leadwire
5	RL	Right leg limb leadwire
6	V/V1	V (during 3 or 5-leadwire use) or V1 (during 10-leadwire use) for chest leadwire
7	V4	V4 chest leadwire
8	LL	Left leg limb leadwire
9	V6	V6 chest leadwire
10	V5	V5 chest leadwire
11	SHIELD	Cable shield

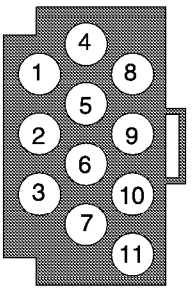

Front View of Green-Colored ECG Connector

Rear Connector

Series 7XXX monitors and Tram-rac housings connect to the Tram module at the MONITOR connector. This is the only connector on the Tram module's rear panel. The MONITOR connector carries power, communication, and analog output signals between the Tram module and a monitor.

Table 6-6. Rear Module Connector

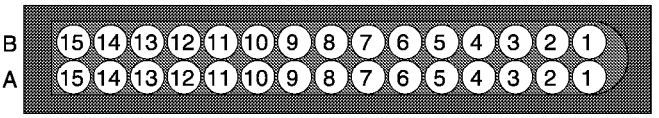

Rear View of Module

Pin	Name	Description
A1	AGND	Non-isolated analog ground reference
A2	XMIT_EN*	When installed in a Tram-rac housing, the Tram module asserts this CMOS output signal to enable Tram-net communication drivers in the Tram-rac housing. When installed in a Series 7XXX monitor, the Tram module asserts this signal whenever the monitor asserts MOD_ENABLE (on pin 2B) high.
A3	SYNC_ECG_RTN	Ground reference for SYNC ECG on pin 4A.
A4	SYNC_ECG	ECG x10 analog output for the top displayed ECG trace[1]
A5	MOD DATA CLK*	Clock input for synchronous shift register communications with a Series 7XXX monitor. Toggles to clock data to a monitor (across MOD DATA OUT) or from a monitor (across MOD DATA IN). This signal toggles 32 times and then goes high to disable Tram module communications while reading from other modules.
A6	MOD_LOAD_DATA_IN*	Module data input. A CMOS signal used with synchronous shift register communication from Series 7XXX monitor, and with Tram-net communication from Tram-rac housings.
A7	MOD_DATA_OUT*	Module data output. A CMOS signal used with synchronous shift register communication to Series 7XXX monitor, and with Tram-net communication to Tram-rac housings.

Table 6-6. Rear Module Connector

A8	MOD_DATA_LCH*	Synchronous shift register communication latch input from Series 70XX monitor. Goes high to signal to the module that it should latch onto the last 32 bits of data sent across MOD DATA IN.
A9	BP3	10 mV/mmHg analog output for BP3 blood pressure trace; outputs SpO_2 value x 10 mV if BP3 isn't cabled; outputs buzz[1] if BP3 is not zeroed
A10	NC	
A11	GND	Non-isolated digital ground reference
A12	BKPLANE_ID	A +5-volt input, supplied only by Tram-rac housings with Tram-net communications.
A13	NC	
A14	NC	
A15	AGND	Non-isolated analog ground reference
B1	ART_BP	10 mV/mmHg analog output for top ART blood pressure trace; outputs BP1 trace if no ART trace is displayed; outputs buzz† if ART/BP1 is not zeroed.
B2	MOD_ENABLE	An input that the 70XX monitor asserts to enable synchronous serial shift register communication with the Tram module.
B3	BP2	10 mV/mmHg analog output for BP2 blood pressure trace; outputs SpO_2 trace if BP2 is not cabled; outputs buzz[1] if BP2 is not zeroed
B4	+16.5V	A 16.5-volt input that powers the Tram module (and, if connected, the transport display)
B5	PWRBUS	16.75-volt power input
B6	TRC2/ECGI	ECG x1000 analog output for lead II. If lead II fails, this signal reverts to buzz[1]
B7	TRC1/ECGI	ECG x1000 analog output for the top displayed ECG trace. This signal reverts to buzz[1] during leads fail condition
B8	ECGV	ECG x1000 analog output for lead V. If lead V fails, this signal reverts to buzz[1]
B9	NC	
B10	BP4	10mV/mmHg analog output for BP4 blood pressure trace; outputs RESP waveform (without markers) if BP4 is not cabled; outputs buzz[1] if BP4 is not zeroed
B11	GND	Non-isolated digital ground reference
B12	+5V	A +5-volt input, used to determine that the Tram module is installed in a monitor.
B13	NC	
B14	NC	
B15	AGND	Non-isolated analog ground reference

[1]NOTE: Buzz is a 60-Hz, 1-volt peak-to-peak triangle waveform centered around 0 volts. It is not perfectly shaped and only indicates the trace is in a failed condition.

MEI/Nellcor SpO_2 Connector

There are two different types of connectors used for collection of SpO_2 data.

Nellcor-style and MEI, non-invasive pulse oximetry probes connect to the Tram X50 module with the square-style SpO_2 connector. This connector carries the red and infrared light source drive outputs and the photodetector and probe type inputs.

Table 6-7. SpO_2 Connector

Pin	Name	Description
1	RSENSE	Probe characteristics ID resistor measurement
2	RED_LED	Red LED cathode (RED LED source)
3	IR_LED	Infrared light source cathode (Infrared LED source)
4	LED_ANODES	NC
5	POX+	Photodetector anode
6	FSHIELD	Cable shield
7	RSENSE COMMON	Common return for RSENSE signal
8	POX_ID*	Tied to ISOGND for MEI probe identification
9	POX–	Photodetector cathode
10	NELLCOR*	Tied to ISOGND for Nellcor probe identification
11	ISOGND	Ground reference for PRB_SENSE and NELLCOR* signals

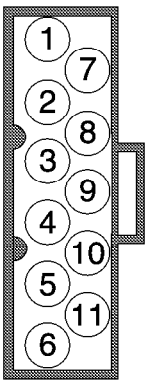

Front View Blue-Colored SpO_2 Connector

The schematic diagram of the MEI/Nellcor probe sensor is presented below.

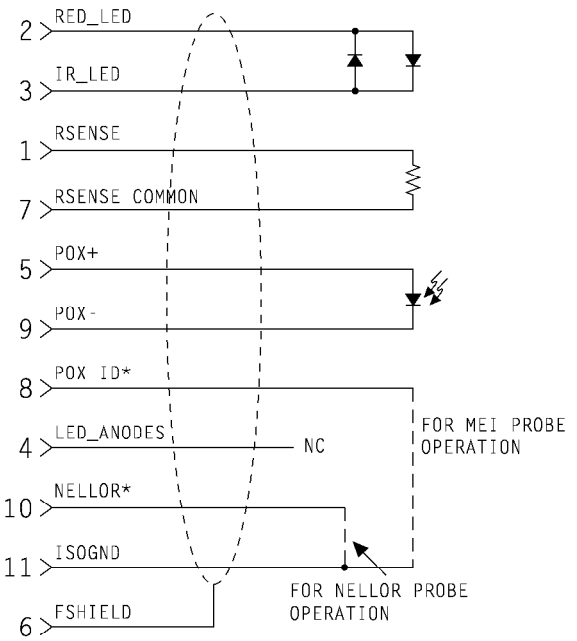

Ohmeda SpO_2 Connector

Ohmeda-style, non-invasive pulse oximetry probes connect to the Tram X50 modules with the round-style SpO2 connector. This connector carries the red and infrared light source drive outputs and the photodetector and probe type inputs.

Table 6-8. SpO_2 Connector

Pin	Name	Description
1	IR_CATHODE	Infrared light source cathode. A 5-volt output, with a 33% duty cycle at 400 Hz for 50-Hz power, or at 480 Hz for 60-Hz power.
2	RED_CATHODE	Red light source cathode. A 5-volt output, with a 33% duty cycle at 400 Hz for 50-Hz power, or at 480 Hz for 60-Hz power.
3	ID_RESISTOR_2	Probe type identification resistor 2
4	LED_ANODE_20/30	Light source anode for type 20 and 30 probes. Used as a return for IR_CATHODE and RED CATHODE.
5	ID_RESISTOR_1	Probe type identification resistor 1
6	LED_ANODES_300	Light source anode for type 300 probes. Used as a return for IR_CATHODE and RED CATHODE.
7	ID_RESISTOR_COM	Probe type identification resistor common
8	DETECTOR_ANODE	Photodetector anode
9	DETECTOR_RTN	Photodetector cathode

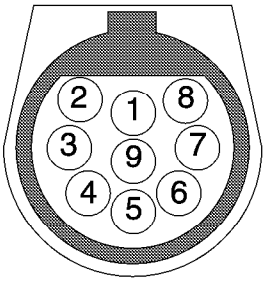

Front View White-Colored SpO_2 Conductor

The schematic diagram of the Ohmeda probe sensor is presented below.

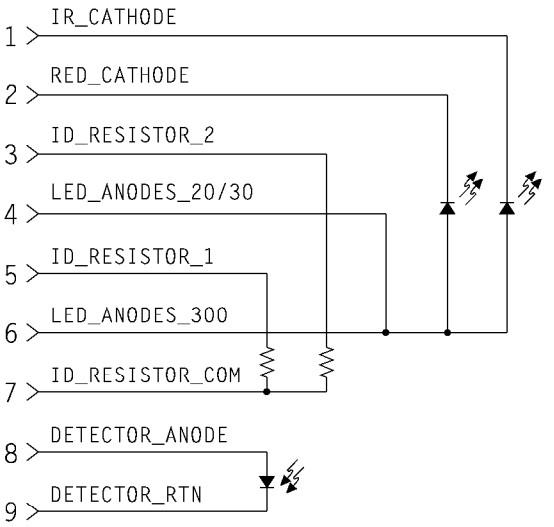

TEMP/CO Connector

Thermistors and cardiac output probes connect to the Tram module at the TEMP/CO connector.

If you have existing temperature or cardiac output cables, we offer termination kits so you can use the cables with your Tram module. Terminate existing cardiac output cables with pn 404859-004. Terminate existing temperature cables with pn 404859-003. Tram X00 Modules/Eagle Monitor Termination Instructions for BP, CO, and TEMP Cables, pn 403799-016, describes how to terminate these cables.

Table 6-9. CO Front Connector

Pin	Name	Type
1	0.25VD REF	A stable +0.25 volt reference output for the thermistors
2	DT/CO IN1	Channel 1 input
3	CO_OFFSET	Catheter offset reference voltage
4	NC	
5	700*/400ID	The TEMP cable connects this input to ISO_DIG_GND when YSI series 700 thermistors are used, and leaves it floating when YSI series 400 thermistors are used
6	SHIELD	Cable shields are connected here
7	ISO_ANALOG_GND	Isolated analog ground reference
8	DT/CO IN2	Channel 2 input
9	CO_PROBE_PRESENT	CO cables connect this input to ISO_DIG_GND to show that they are connected.
10	TEMP_PROBE_PRESENT	TEMP cables connect this input to ISO_DIG_GND to show that they are connected.
11	ISO_DIG_GND	Isolated digital ground

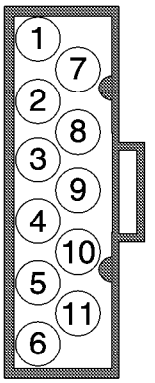

Front View of Brown-Colored TEMP/CO Connector

The schematic diagram of the typical TEMP cable/thermistor schematic diagram is presented below.

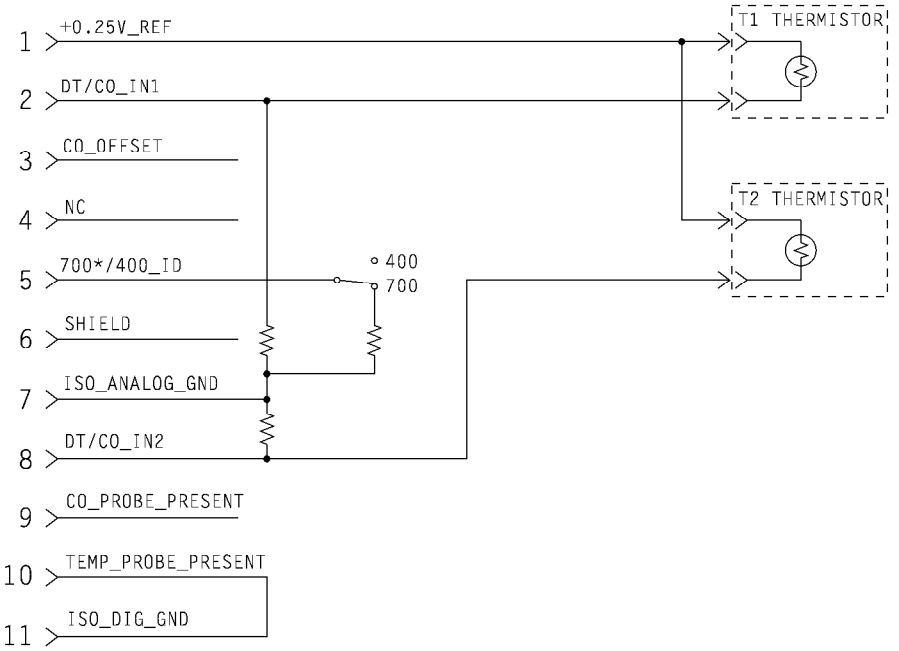

The schematic diagram of the typical CO cable/thermistor schematic diagram schematic diagram is presented below.

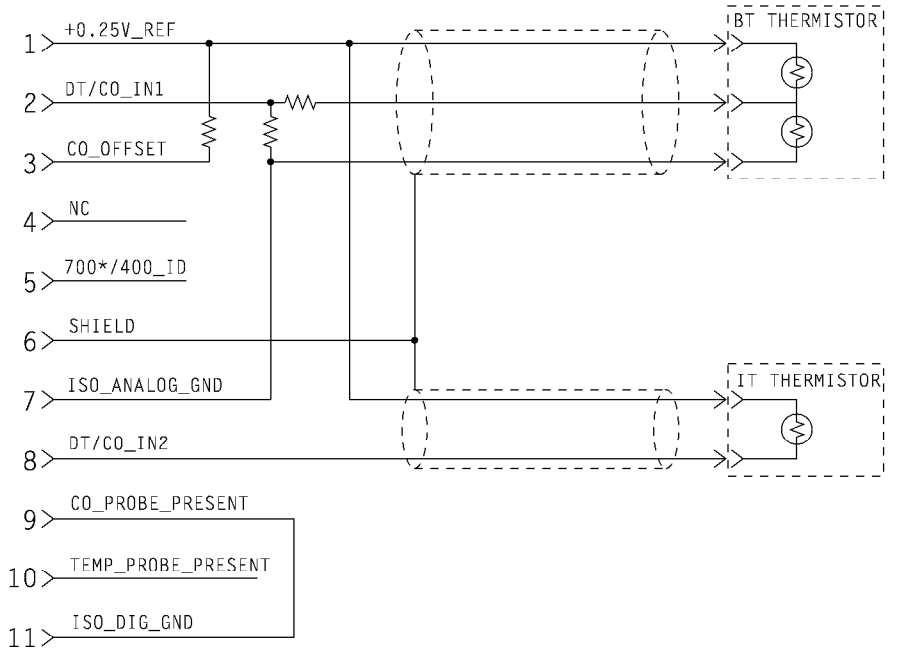

7 TRAM 100A MODULE PN 408000

Assembly Configurations **7-2**

Exploded View PN 408000C **7-3**

Schematic Diagram PN 408000C **7-5**

Parts List PN 408000C **7-7**

Revisions Assemblies **7-9**

General

Circuit Boards

Details about the circuit boards contained in the Tram 100A are discussed in later chapters arranged by part number.

Table 7-1. Circuit Board Overview

Module Type	Upper Level	Leadwire Configuration	DAS Module	Acquisition Processor PCB	Module Processor PCB
Tram 100A	40800-0XX	5-Leadwire	408134-001	800330-005	800210-005

Tram 100A Configurations

Marquette manufactures 16 different configurations of this assembly at the time of this writing. The configurations differ in the power frequency, number of ECG leadwires, the type of labelling, and the units of measure used. The table below lists the available configurations.

Table 7-2. Configurations

Part Number	Revision	Power *f* (Hz)	ECG Leadwires	Labels	Units of Measure
408000-001	B	60	5	English	English
408000-002	A	50	5	English	English
408000-003	B	60	5	English	English
408000-004	A	50	5	English	English
408000-005	A	60	5	English	SI
408000-006	A	50	5	English	SI
408000-007	A	60	5	English	SI
408000-008	A	50	5	English	SI
408000-011	A	60	5	Icon	English
408000-012	A	50	5	Icon	English
408000-013	A	60	5	Icon	English
408000-014	A	50	5	Icon	English
408000-015	A	60	5	Icon	SI
408000-016	B	50	5	Icon	SI
408000-017	A	60	5	Icon	SI
408000-018	B	50	5	Icon	SI

Part number 408000A without a dashed suffix (ie, pn 408000A, as opposed to pn 408000-001A or pn 408000-002A) refers to all of the assemblies listed in the table above. Unless otherwise noted, all assemblies are the same.

Exploded View

PN 408000C

1 of 2

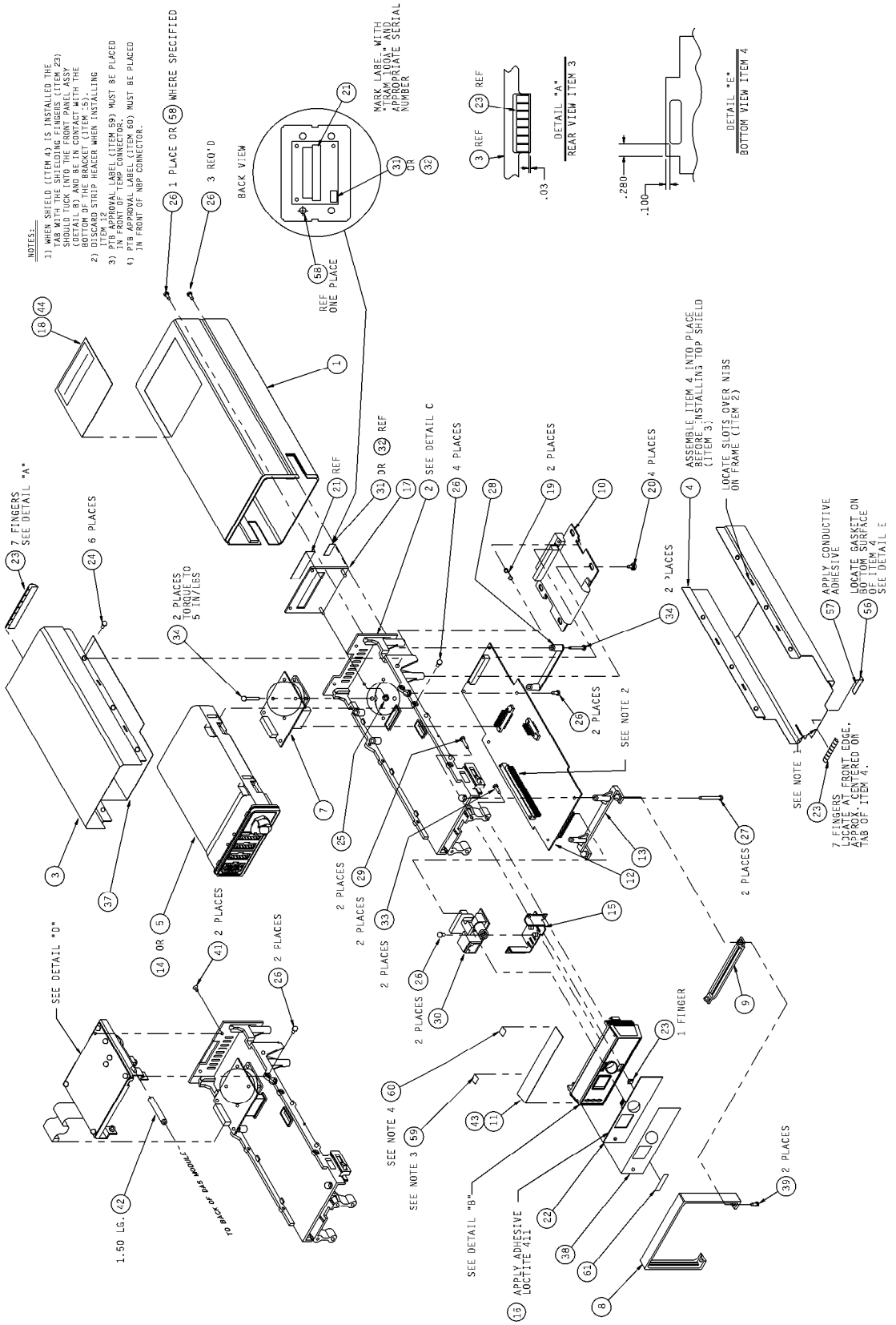

2 of 2

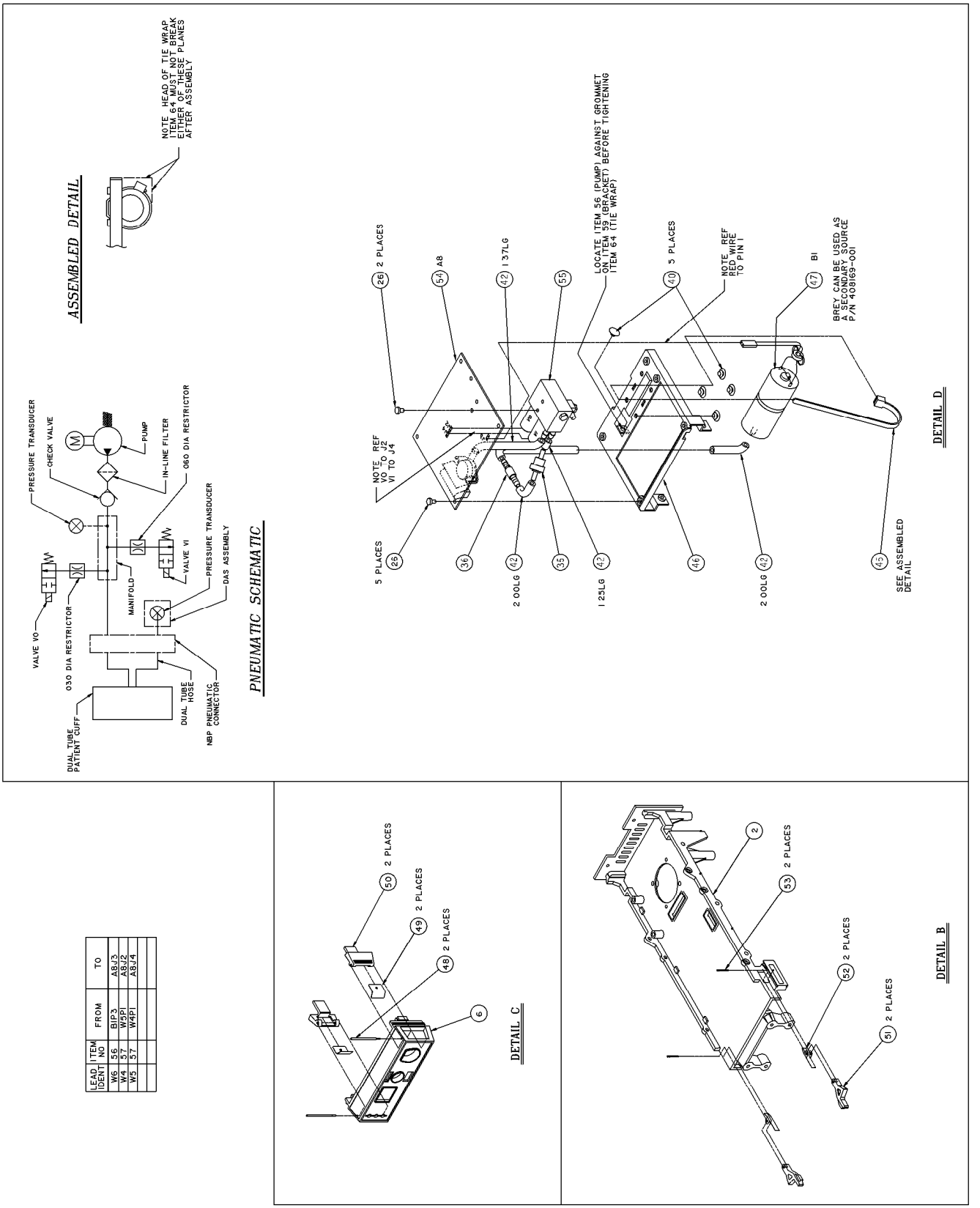

LEAD IDENT	ITEM NO	FROM	TO
W6	56	B1P3	A8J3
W4	57	W5P1	A8J2
W5	57	W4P1	A8J4

Schematic Diagram PN 408000C

1 of 2

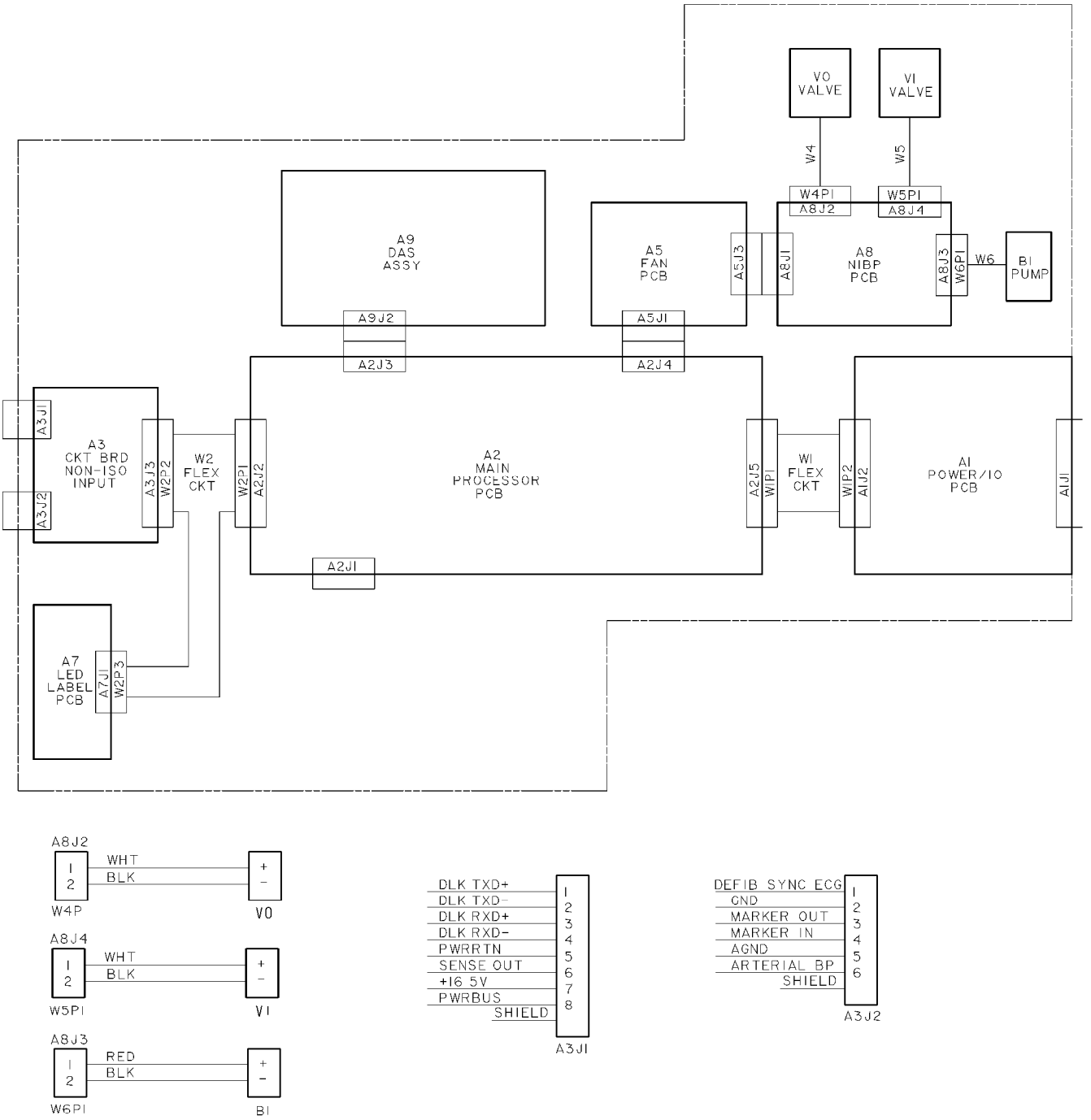

2 of 2

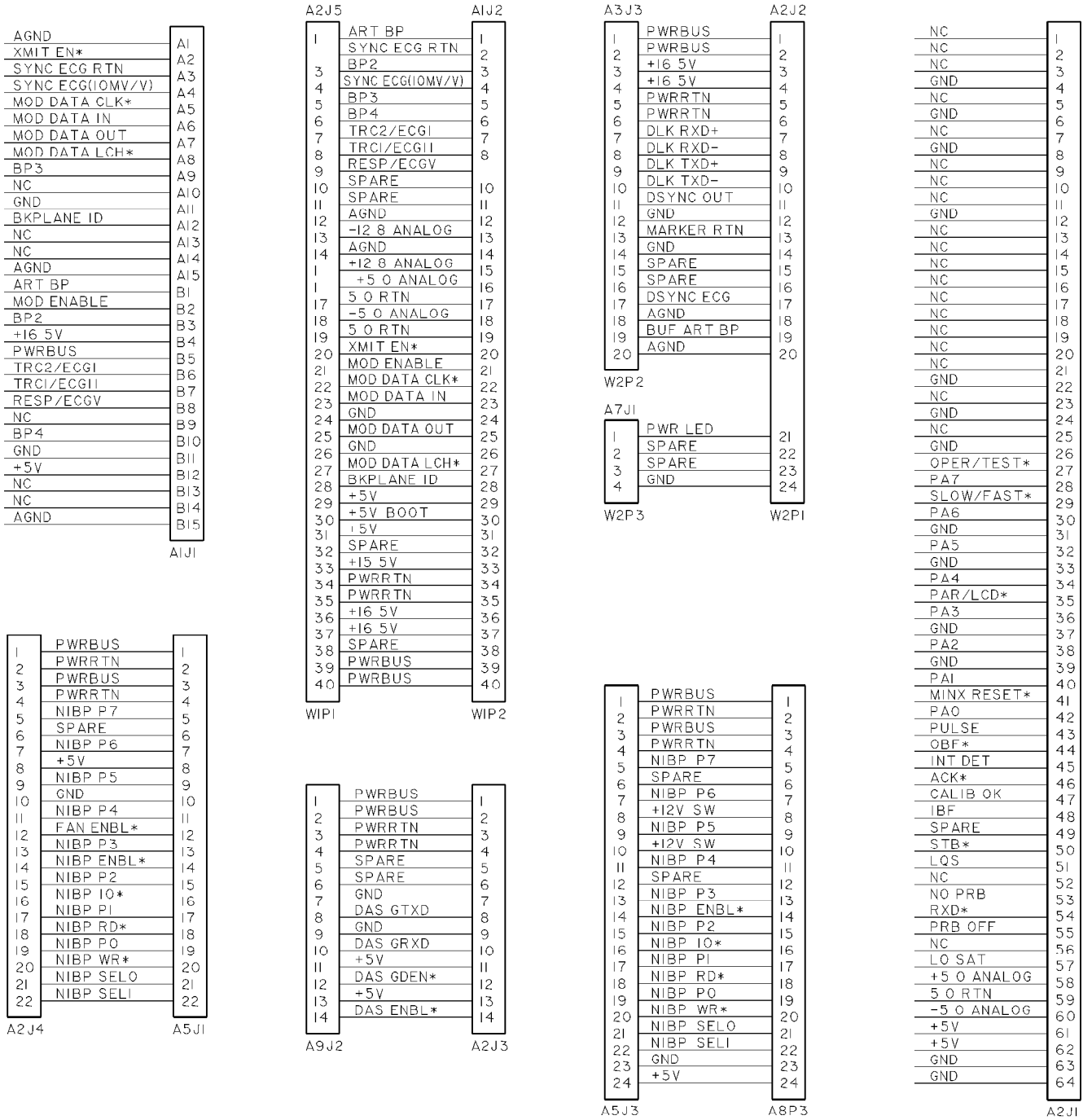
A1J1
AGND
XMIT EN*
SYNC ECG RTN
SYNC ECG(10MV/V)
MOD DATA CLK*
MOD DATA IN
MOD DATA OUT
MOD DATA LCH*
BP3
NC
GND
BKPLANE ID
NC
NC
AGND
ART BP
MOD ENABLE
BP2
+16 5V
PWRBUS
TRC2/ECGI
TRCI/ECGII
RESP/ECGV
NC
BP4
GND
+5V
NC
NC
AGND
A2J5
WIP1
ART BP
SYNC ECG RTN
BP2
SYNC ECG(10MV/V)
BP3
BP4
TRC2/ECGI
TRCI/ECGII
RESP/ECGV
SPARE
SPARE
AGND
-12 8 ANALOG
AGND
+12 8 ANALOG
+5 0 ANALOG
5 0 RTN
-5 0 ANALOG
5 0 RTN
XMIT EN*
MOD ENABLE
MOD DATA CLK*
MOD DATA IN
GND
MOD DATA OUT
GND
MOD DATA LCH*
BKPLANE ID
+5V
+5V BOOT
15V
SPARE
+15 5V
PWRRTN
PWRRTN
+16 5V
+16 5V
SPARE
PWRBUS
PWRBUS
A1J2
WIP2
A2J4
PWRBUS
PWRRTN
PWRBUS
PWRRTN
NIBP P7
SPARE
NIBP P6
+5V
NIBP P5
GND
NIBP P4
FAN ENBL*
NIBP P3
NIBP ENBL*
NIBP P2
NIBP 10*
NIBP P1
NIBP RD*
NIBP P0
NIBP WR*
NIBP SELO
NIBP SELI
A5J1
A9J2
PWRBUS
PWRBUS
PWRRTN
PWRRTN
SPARE
SPARE
GND
DAS GTXD
GND
DAS GRXD
+5V
DAS GDEN*
+5V
DAS ENBL*
A2J3
A3J3
PWRBUS
PWRBUS
+16 5V
+16 5V
PWRRTN
PWRRTN
DLK RXD+
DLK RXD-
DLK TXD+
DLK TXD-
DSYNC OUT
GND
MARKER RTN
GND
SPARE
SPARE
DSYNC ECG
AGND
BUF ART BP
AGND
W2P2
A7J1
PWR LED
SPARE
SPARE
GND
W2P3
A2J2
W2P1
A5J3
PWRBUS
PWRRTN
PWRBUS
PWRRTN
NIBP P7
SPARE
NIBP P6
+12V SW
NIBP P5
+12V SW
NIBP P4
SPARE
NIBP P3
NIBP ENBL*
NIBP P2
NIBP 10*
NIBP P1
NIBP RD*
NIBP P0
NIBP WR*
NIBP SELO
NIBP SELI
GND
+5V
A8P3
NC
NC
NC
GND
NC
GND
NC
GND
NC
NC
NC
GND
NC
NC
NC
NC
NC
NC
NC
NC
NC
GND
NC
GND
NC
GND
OPER/TEST*
PA7
SLOW/FAST*
PA6
GND
PA5
GND
PA4
PAR/LCD*
PA3
GND
PA2
GND
PA1
MINX RESET*
PA0
PULSE
OBF*
INT DET
ACK*
CALIB OK
IBF
SPARE
STB*
LQS
NC
NO PRB
RXD*
PRB OFF
NC
LO SAT
+5 0 ANALOG
5 0 RTN
-5 0 ANALOG
+5V
+5V
GND
GND
A2J1

Parts List PN 408000C

Item	Reference Designation	Parts List	Part Number	Qty
		Cover, Module	400895-001	1
2		Frame	400982-001	1
3		Shield, Top	401679-001	1
4		Shield, Bottom	401679-002	1
5	A9	100/200 Acquisition Module, 5-Lead	408134-001	*
6		Front Bezel, Lower	401105-005	1
7	A5	Fan PCB Assembly	403549-002	1
8		Trim, Rubber, Front Bezel	404620-001	1
9		Mounting Strap, Trim	404621-001	1
10	A1, W1	Power Supply PCB Assembly	401309-002	1
11		Label, Isolated Connector Function, Tram100A/200A, English	402313-001	*
12	A2	Module Processor PCB Assembly	800210-001	1
13		Circuit Board/Bezel Mount	404762-001	1
14	A9	Tram 100/200 Data Acquisition Module, 10-Lead	408134-002	*
15		Plate, Chassis Ground, Bottom/Front	402317-001	1
16		Adhesive, Loctite Prism 411	4851-082	AR
17		Plate, Chassis Ground, Rear	404680-002	1
18		Label, Cover, English	403439-001	*
19		Spring, Compression	402315-001	2
20		Screw, Power Supply PCB Mounting, SST, 4-40	402214-001	4
21		Label, Model/Serial Number	404525-006	1
22	A7	Power Indicator PCB Assembly	403170-009	1
23		Spring, Chassis Ground, Rear	403741-001	AR
24		Screw, FLH, 100˚, Phillips, SST, 4-40 x 3/16	4505-406	6
25		Nut, Hex, 4-40	4521-304	2
26		Screw, BDGH, Phillips, 4-40 x 3/16	45074-406	21
27		Screw, BDGH, Phillips, 4-40 x 1-1/8	45074-436	2
28		Bracket, Power Supply PCB	406254-001	1
29		Screw, 4-40 x 7/8	404069-001	2
30	A3, W2	Non-Isolated Input PCB Assembly	401315-002	1
31		Label, 60-Hz	70386-001	*
32		Label, 50-Hz	70386-002	*
33		Screw, BDGH, Phillips, 4-40 x 5/8	45074-420	2
34		Screw, BDGH, Phillips, 4-40 x 3/4	45074-424	4
35		Check Valve, 0.125 ID	404675-001	1
36		Filter, 43 Micron	404679-001	1
37		Insulator, Bottom Shield	404188-001	1
38		Label, Lower Bezel	408162-001	1
39		Screw, BDGH, Phillips, 4-40 x 3/8	45074-412	2
40		Grommet, 1/4 Dia, 1/8 High, 1/16 Panel Thickness	404749-001	5

Item	Reference Designation	Parts List	Part Number	Qty
41		Screw, FLH, Phillips, SST, 4-40 x 3/8	4505-412	2
42		Tubing, Silastic	401582-001	AR
43		Label, Isolated Connector Function, Tram 100A/ 200A, Icon	402313-002	*
44		Label, Cover, Icon	403439-002	*
45		Tie Wrap	4535-002	1
46		Bracket, NBP Mounting	404296-001	1
47	B1, W6	Pump Assembly, NBP, w/Harness	408169-002	1
48		Pin, Latch	402806-001	2
49		Spring, Flat, SST	405041-001	2
50		Button, Latch	402106-001	2
51		Latch	401682-001	2
52		Spring, Latch	406019-001	2
53		Pin, Latch	406037-001	2
54	A8	NBP PCB Assembly	800316-001	1
55	V0, V1, W4, W5	NBP Valve Assembly	404459-001	1
56		Gasket, Silver-Nickel	407894-001	1
57		Adhesive, Conductive	4851-088	AR
58		Screw, PNHD, 4-40 x 0.188	409009-001	*
59		Label, PTB Approval	409047-002	*
60		Label, PTB Approval	409047-001	*
61		Label, Leadwire Warning	414097-001	*

*See the following chart:

	Assembly Configuration															
Item	-001	-002	-003	-004	-005	-006	-007	-008	-011	-012	-013	-014	-015	-016	-017	-018
5	1	1	–	–	1	1	–	–	1	1	–	–	1	1	–	–
11	1	1	1	1	1	1	1	1	–	–	–	–	–	–	–	–
14	–	–	1	1	–	–	1	1	–	–	1	1	–	–	1	1
18	1	1	1	1	1	1	1	1	–	–	–	–	–	–	–	–
31	1	–	1	–	1	–	1	–	1	–	1	–	1	–	1	–
32	–	1	–	1	–	1	–	1	–	1	–	1	–	1	–	1
43	–	–	–	1	–	–	–	–	1	1	1	1	1	1	1	1
44	–	–	–	–	–	–	–	–	1	1	1	1	1	1	1	1
58	–	–	–	–	–	–	–	–	–	–	–	–	–	1	–	1
59	–	–	–	–	–	–	–	–	–	–	–	–	–	1	–	1
60	–	–	–	–	–	–	–	–	–	–	–	–	–	1	–	1
61	1	–	1	–	–	–	–	–	–	–	–	–	–	–	–	–

Assembly Revisions PN 408000

The baseline revision for this assembly is pn 408000C. To convert the parts list back to a previous revision, change all part numbers, descriptions, and quantities as indicated in the revision tables given below.

PN 408000A

Item	Reference Designation	Description	Revision's Part Number	Baseline Part Number	Qty
58		Screw, BDGH, 4-40 x 0.188	45074-406	40900-001	*
59		Label, German PTB	Not Used	409047-002	1
60		Label, German PTB	Not Used	409047-001	1
61		Label, Leadwires Warning	Not Used	414097-001	1

PN 408000B

Item	Reference Designation	Description	Revision's Part Number	Baseline Part Number	Qty
61		Label, Leadwires Warning	Not Used	414097-001	1

For your notes

8 TRAM 200A/SL MODULE PN 408001/411160

General **8-2**
Circuit Boards 8-2
Tram 200A Configurations 8-2

Exploded View PN 408001C **8-3**

Schematic Diagram PN 408001C **8-5**

Parts List PN 408001C **8-8**

Assembly Revisions PN 408001 ..... **8-11**

Exploded View PN 411160-001H **8-12**

Schematic Diagram PN 411160-001H **8-14**

Parts List PN 411160-001H **8-17**

Assembly Revisions PN 411160 ..... **8-20**

General

Circuit Boards

Details about the circuit boards contained in the Tram 200A/SL are discussed in later chapters arranged by part number.

Table 8-1. Circuit Board Overview

Module Type	Upper Level	Leadwire Configuration	DAS Module	Acquisition Processor PCB	Module Processor PCB
Tram 200A	408001-0XXA–C	5-Leadwire	408134-002	800330-006	800210-005
Tram 200SL	411160-001A–G	10-Leadwire	411166-001	800330-006	800210-005
Tram 200SL	411160-001H	10-Leadwire	417120-001 (Replaced 411166-001)	801040-001	800210-005

Tram 200A Configurations

At the time of this writing, 16 configurations of the Tram 200A module are available. The differences between configurations are in the power frequency, the type of labelling, and the units of measure used. The table below lists the available configurations.

Table 8-2. Configurations

Part Number	Rev	Power *f* (Hz)	Labels	Units of Measure
408001-001	B	60	English	English
408001-002	A	50	English	English
408001-003	B	60	English	English
408001-004	A	50	English	English
408001-005	A	60	English	SI
408001-006	A	50	English	SI
408001-007	A	60	English	SI
408001-008	A	50	English	SI
408001-011	A	60	Icon	English
408001-012	A	50	Icon	English
408001-013	A	60	Icon	English
408001-014	A	50	Icon	English
408001-015	A	60	Icon	SI
408001-016	B	50	Icon	SI
408001-017	A	60	Icon	SI
408001-018	B	50	Icon	SI

Part number 408001A without a dashed suffix (ie, pn 408001A, as opposed to pn 408001-001A or pn 408000-002A) refers to all of the assemblies listed in the table above. Unless otherwise noted, all assemblies are the same.

Exploded View

PN 408001C

1 of 2

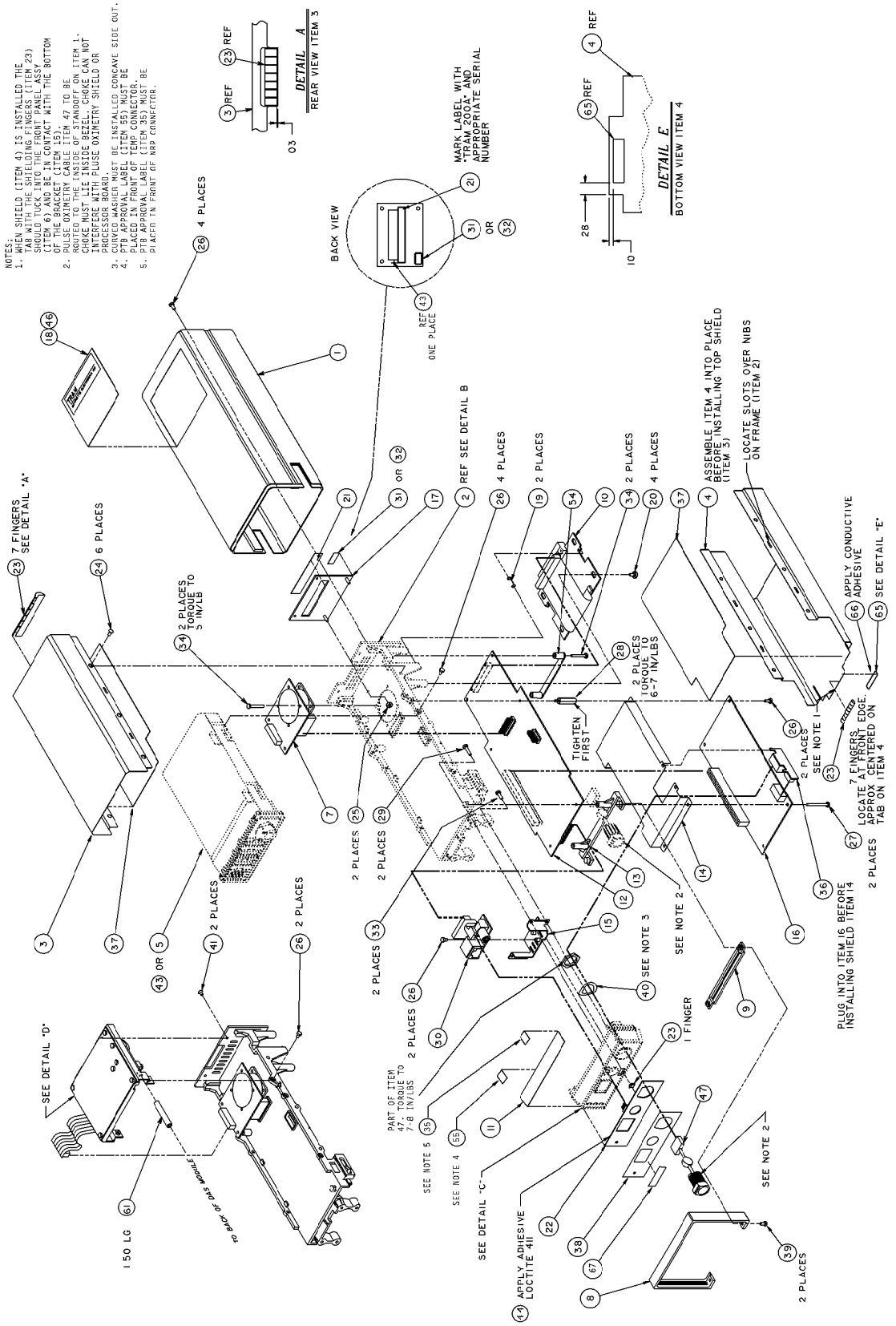

2 of 2

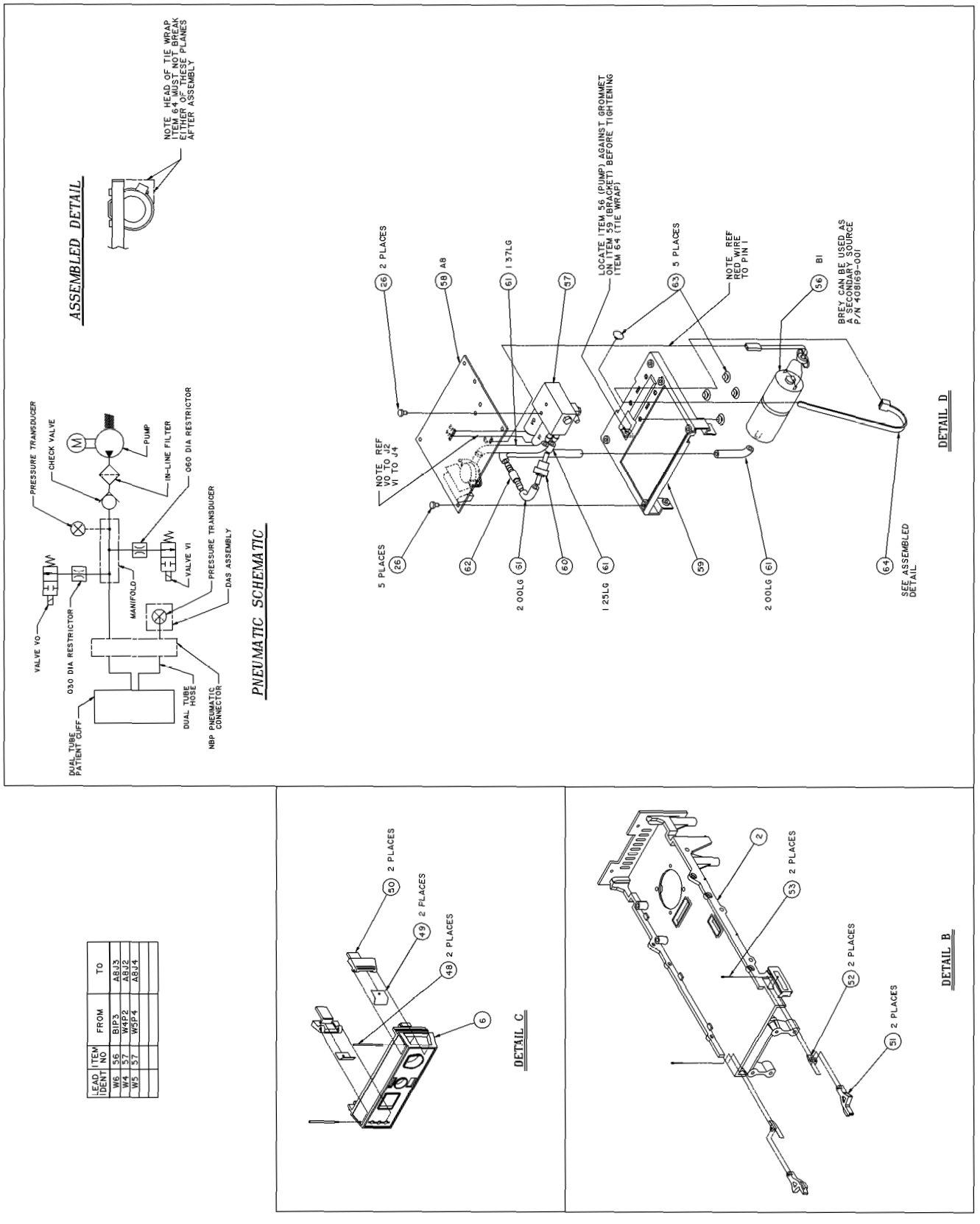

LEAD IDENT	ITEM NO	FROM	TO
W6	56	B1P3	A8J3
W4	57	W4P2	A8J2
W5	57	W5P4	A8J4

Schematic Diagram PN 408001C

1 of 3

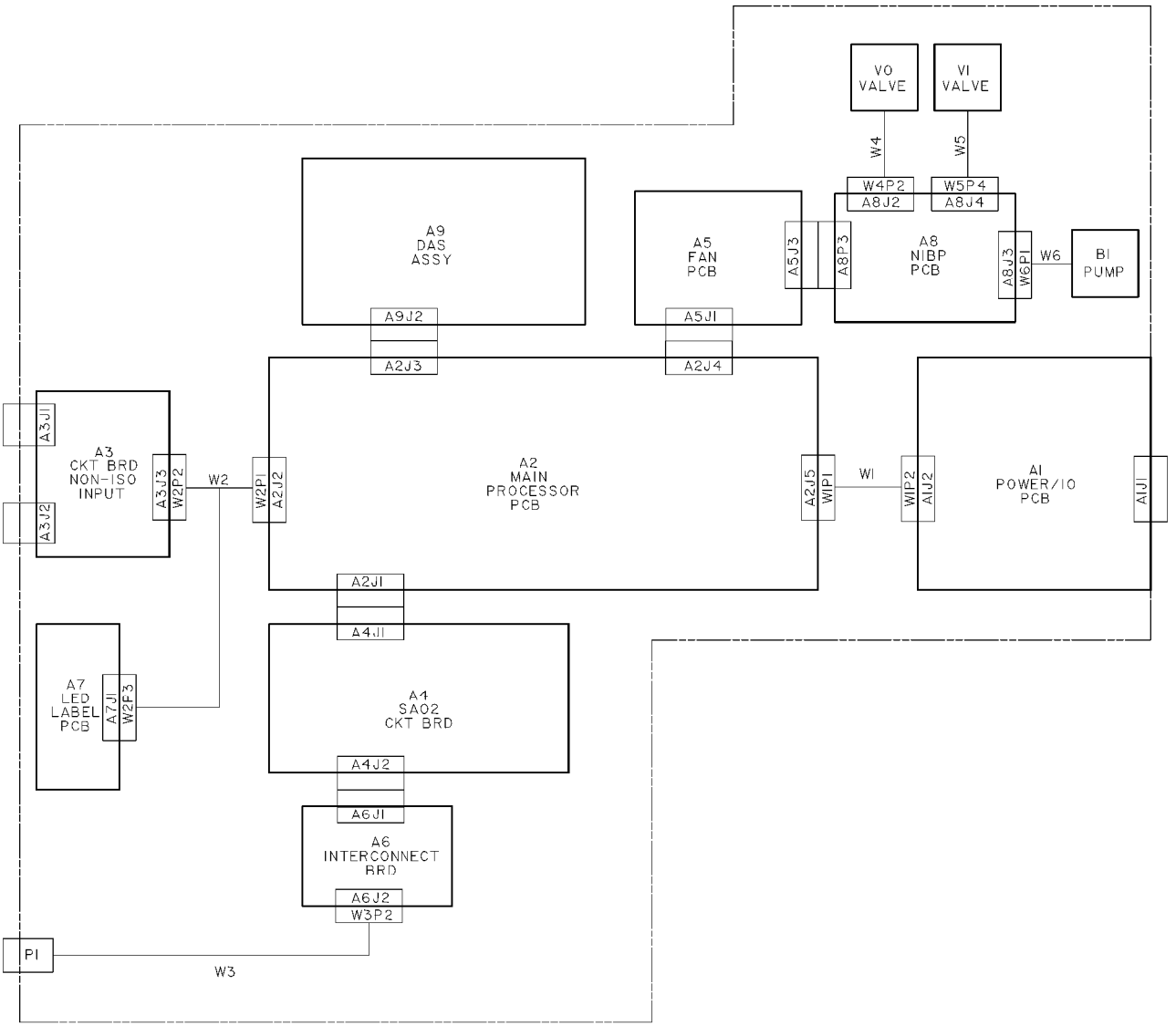

2 of 3

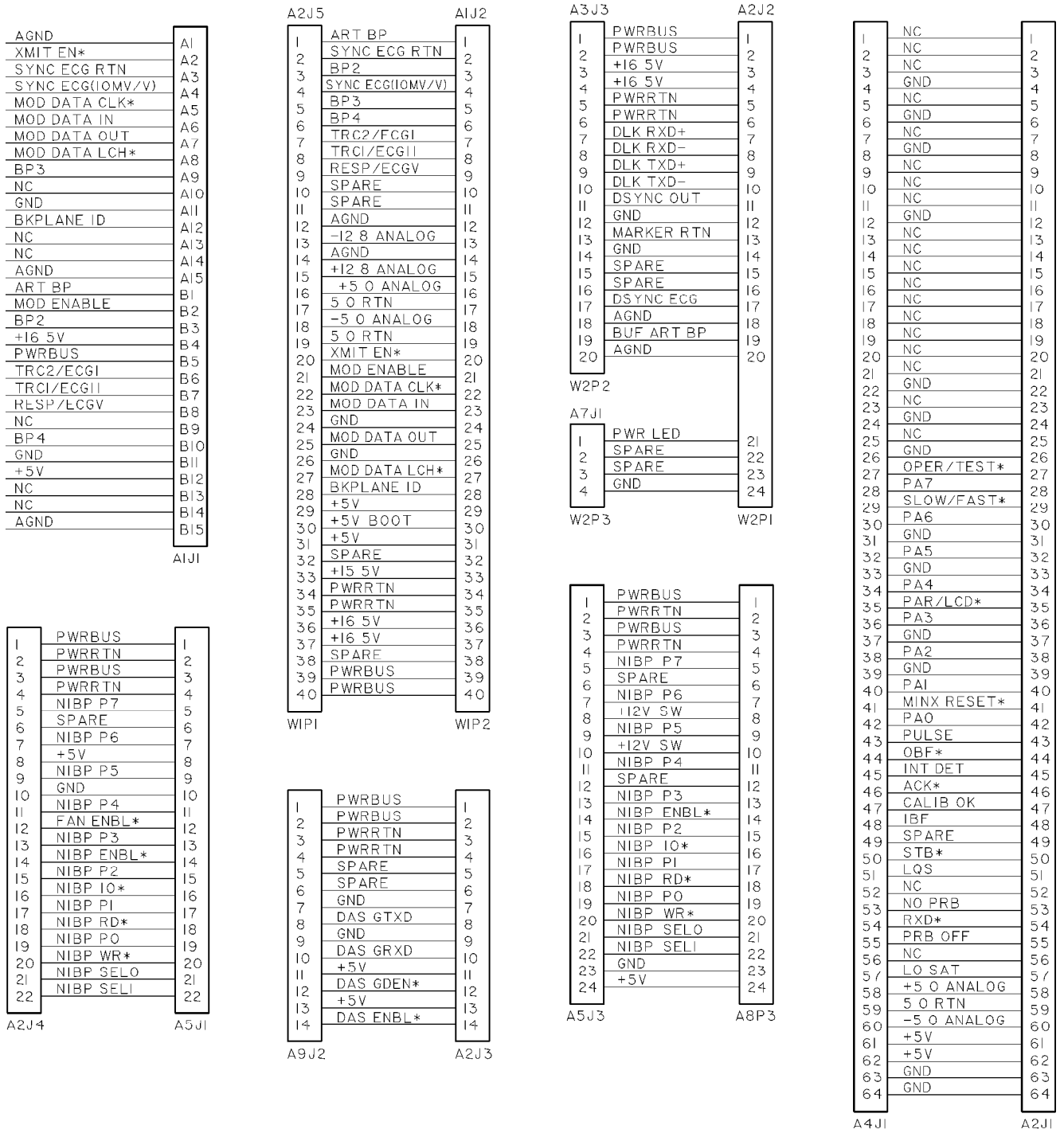
A1J1
AGND
XMIT EN*
SYNC ECG RTN
SYNC ECG(10MV/V)
MOD DATA CLK*
MOD DATA IN
MOD DATA OUT
MOD DATA LCH*
BP3
NC
GND
BKPLANE ID
NC
NC
AGND
ART BP
MOD ENABLE
BP2
+16 5V
PWRBUS
TRC2/ECG1
TRC1/ECG11
RESP/ECGV
NC
BP4
GND
+5V
NC
NC
AGND
A2J5
A1J2
ART BP
SYNC ECG RTN
BP2
SYNC ECG(10MV/V)
BP3
BP4
TRC2/ECG1
TRC1/ECG11
RESP/ECGV
SPARE
SPARE
AGND
-12 8 ANALOG
AGND
+12 8 ANALOG
+5 0 ANALOG
5 0 RTN
-5 0 ANALOG
5 0 RTN
XMIT EN*
MOD ENABLE
MOD DATA CLK*
MOD DATA IN
GND
MOD DATA OUT
GND
MOD DATA LCH*
BKPLANE ID
+5V
+5V BOOT
+5V
SPARE
+15 5V
PWRRTN
PWRRTN
+16 5V
+16 5V
SPARE
PWRBUS
PWRBUS
W1P1
W1P2
A3J3
PWRBUS
PWRBUS
+16 5V
+16 5V
PWRRTN
PWRRTN
DLK RXD+
DLK RXD-
DLK TXD+
DLK TXD-
DSYNC OUT
GND
MARKER RTN
GND
SPARE
SPARE
DSYNC ECG
AGND
BUF ART BP
AGND
W2P2
A2J2
A7J1
PWR LED
SPARE
SPARE
GND
W2P3
W2P1
PWRBUS
PWRRTN
PWRBUS
PWRRTN
NIBP P7
SPARE
NIBP P6
+5V
NIBP P5
GND
NIBP P4
FAN ENBL*
NIBP P3
NIBP ENBL*
NIBP P2
NIBP 10*
NIBP P1
NIBP RD*
NIBP P0
NIBP WR*
NIBP SELO
NIBP SEL1
A2J4
A5J1
PWRBUS
PWRBUS
PWRRTN
PWRRTN
SPARE
SPARE
GND
DAS GTXD
GND
DAS GRXD
+5V
DAS GDEN*
+5V
DAS ENBL*
A9J2
A2J3
PWRBUS
PWRRTN
PWRBUS
PWRRTN
NIBP P7
SPARE
NIBP P6
+12V SW
NIBP P5
+12V SW
NIBP P4
SPARE
NIBP P3
NIBP ENBL*
NIBP P2
NIBP 10*
NIBP P1
NIBP RD*
NIBP P0
NIBP WR*
NIBP SELO
NIBP SEL1
GND
+5V
A5J3
A8P3
NC
NC
NC
GND
NC
GND
NC
GND
NC
NC
NC
GND
NC
NC
NC
NC
NC
NC
NC
NC
NC
GND
NC
GND
NC
GND
OPER/TEST*
PA7
SLOW/FAST*
PA6
GND
PA5
GND
PA4
PAR/LCD*
PA3
GND
PA2
GND
PA1
MINX RESET*
PA0
PULSE
OBF*
INT DET
ACK*
CALIB OK
IBF
SPARE
STB*
LQS
NC
NO PRB
RXD*
PRB OFF
NC
LO SAT
+5 0 ANALOG
5 0 RTN
-5 0 ANALOG
+5V
+5V
GND
GND
A4J1
A2J1

3 of 3

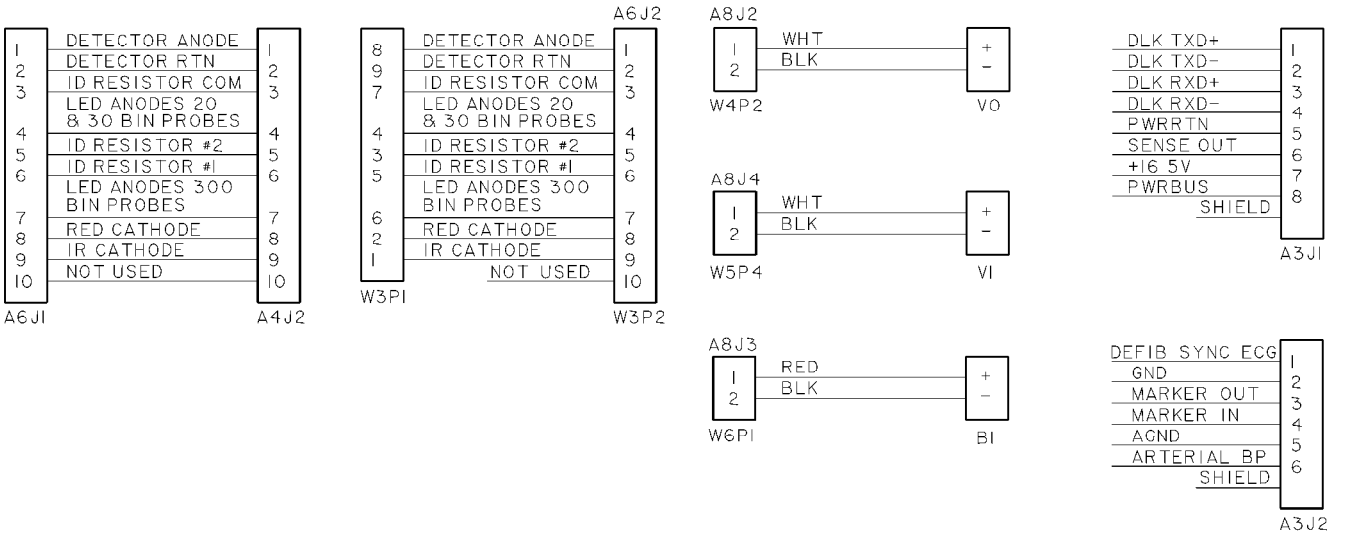
A6J1
DETECTOR ANODE
DETECTOR RTN
ID RESISTOR COM
LED ANODES 20 & 30 BIN PROBES
ID RESISTOR #2
ID RESISTOR #1
LED ANODES 300 BIN PROBES
RED CATHODE
IR CATHODE
NOT USED
A4J2
W3P1
A6J2
W3P2
A8J2
W4P2
WHT
BLK
V0
A8J4
W5P4
V1
A8J3
W6P1
RED
B1
DLK TXD+
DLK TXD-
DLK RXD+
DLK RXD-
PWRRTN
SENSE OUT
+16 5V
PWRBUS
SHIELD
A3J1
DEFIB SYNC ECG
GND
MARKER OUT
MARKER IN
AGND
ARTERIAL BP
A3J2

Parts List PN 408001C

Item	Reference Designation	Parts List	Part Number	Qty
1		Cover, Module	400895-001	1
2		Frame	400982-001	1
3		Shield, Top	401679-001	1
4		Shield, Bottom	401679-002	1
5	A9	100/200 Acquisition Module, 5-Lead	408134-001	*
6		Front Bezel, Lower	401105-004	1
7	A5	Fan PCB	403549-002	1
8		Trim, Rubber, Front Bezel	404620-001	1
9		Mounting Strap, Trim	404621-001	1
10	A1	Power Supply PCB	401309-002	1
11		Label, Isolated Connector Function, Tram 100A/ 200A, English	402313-001	*
12	A2	Module Processor PCB	800210-001	1
13		Circuit Board/Bezel Mount	404672-001	1
14		Shield, Pulse Oximetry PCB	401680-001	1
15		Plate, Chassis Ground, Bottom/Front	402317-001	1
16	A4	Pulse Oximetry PCB	401189-001	1
17		Platc, Chassis Ground, Rear	404680-002	1
18		Label, Cover, English	403439-001	*
19		Spring, Compression	402315-001	2
20		Screw, Power Supply PCB Mounting, SST, 4-40	402214-001	4
21		Label, Model/Serial Number	404525-006	1
22	A7	Power Indicator PCB	403170-008	1
23		Spring, Chassis Ground, Rear	403741-001	AR
24		Screw, FLH, 100°, Phillips, SST, 4-40 x 3/16	4505-406	6
25		Nut, Hex, 4-40	4521-304	2
26		Screw, BDGH, Phillips, 4-40 x 3/16	45074-406	19
27		Screw, BDGH, Phillips, 4-40 x 1-3/8	45074-438	2
28		Spacer, Male/Female, 4-40 x 0.875	4656-414	2
29		Screw, 4-40 x 7/8	404069-001	2
30	A3, W2	Non-Isolated Input PCB	401315-002	1
31		Label, 60-Hz	70386-001	*
32		Label, 50-Hz	70386-002	*
33		Screw, BDGH, Phillips, 4-40 x 5/8	45074-420	2
34		Screw, BDGH, Phillips, 4-40 x 3/4	45074-424	4
35		Label, PTB Approval	409047-001	*
36	A6	Interconnect PCB	800006-001	1
37		Insulator, Bottom Shield	404188-001	2
38		Label, Lower Bezel	408162-002	1
39		Screw, BDGH, Phillips, 4-40 x 3/8	45074-412	2
40		Washer, Pulse Oximetry Connector	4550-250	1

Item	Reference Designation	Parts List	Part Number	Qty
41		Screw, FLH, Phillips, SST, 4-40 x 3/8	4505-412	2
42		Screw, PNHD, 4-40 x 0.188	409009-001	*
43	A9	Tram 100/200 Data Acquisition Module, 10-Lead	408134-002	*
44		Adhesive, Loctite Prism 411	4851-082	AR
45		Labcl, Isolatcd Connccctor Function, Tram 100A/ 200A, English	402313-001	*
46		Label, Cover, Icon	403439-002	*
47	W3	Harness, Pulse Oximetry PCB-to-Connector	700091-001	1
48		Pin, Latch	402806-001	2
49		Spring, Flat, SST	405041-001	2
50		Button, Latch	402106-001	2
51		Latch	401682-001	2
52		Spring, Latch	406019-001	2
53		Pin, Latch	406037-001	2
54		Bracket, Power Supply PCB	406254-001	1
55		Label, PTB Approval	409047-002	*
56	B1, W6	Pump Assembly, NBP, w/Harness	408169-002	1
57	V0, V1, W4, W5	NBP Valve Assembly	404459-001	1
58	A8	NBP PCB	800316-001	1
59		Bracket, NBP Mounting	404296-001	1
60		Check Valve, 0.125 ID	404675-001	1
61		Tubing, Silastic	401582-001	AR
62		Filter, 43 Micron	404679-001	1
63		Grommet, 1/4 Dia, 1/8 High, 1/16 Panel		
		Thickness	404749-001	5
64		Tie Wrap	4535-002	1
65		Gasket, Silver-Nickel	407894-001	1
66		Adhesive, Conductive	4851-088	AR
67		Label, Leadwire Warning	414097-001	*

*See the following chart:

	Assembly Configuration															
Item	-001	-002	-003	-004	-005	-006	-007	-008	-011	-012	-013	-014	-015	-016	-017	-018
5	1	1	–	–	1	1	–	–	1	1	–	–	1	1	–	–
11	1	1	1	1	1	1	1	1	–	–	–	–	–	–	–	–
18	1	1	1	1	1	1	1	1	–	–	–	–	–	–	–	–
31	1	–	1	–	1	–	1	–	1	–	1	–	1	–	1	–
32	–	1	–	1	–	1	–	1	–	1	–	1	–	1	–	1
35	–	–	–	–	–	–	–	–	–	–	–	–	–	1	–	1
42	–	–	–	–	–	–	–	–	–	–	–	–	–	1	–	1
43	–	–	1	1	–	–	1	1	–	–	1	1	–	–	1	1
45	–	–	–	–	–	–	–	–	1	1	1	1	1	1	1	1
46	–	–	–	–	–	–	–	–	1	1	1	1	1	1	1	1
55	–	–	–	–	–	–	–	–	–	–	–	–	–	1	–	1
67	1	–	1	–	–	–	–	–	–	–	–	–	–	–	–	–

Assembly Revisions PN 408001

The baseline revision for this assembly is pn 408001C. To convert the parts list back to a previous revision, change all part numbers, descriptions, and quantities as indicated in the revision tables given below.

PN 408001A

Item	Reference Designation	Description	Revision's Part Number	Baseline Part Number	Qty
35		Label, German PTB	Not Used	409047-001	1
35		Screw, BDGH, 4-40 x 0.188	45074-406	409009-001	*
55		Label, German PTB	Not Used	409047-002	1
67		Label, Leadwires Warning	Not Used	414097-001	*

PN 408001B

Item	Reference Designation	Description	Revision's Part Number	Baseline Part Number	Qty
67		Label, Leadwires Warning	Not Used	414097-001	*

Exploded View

PN 411160-001H

1 of 2

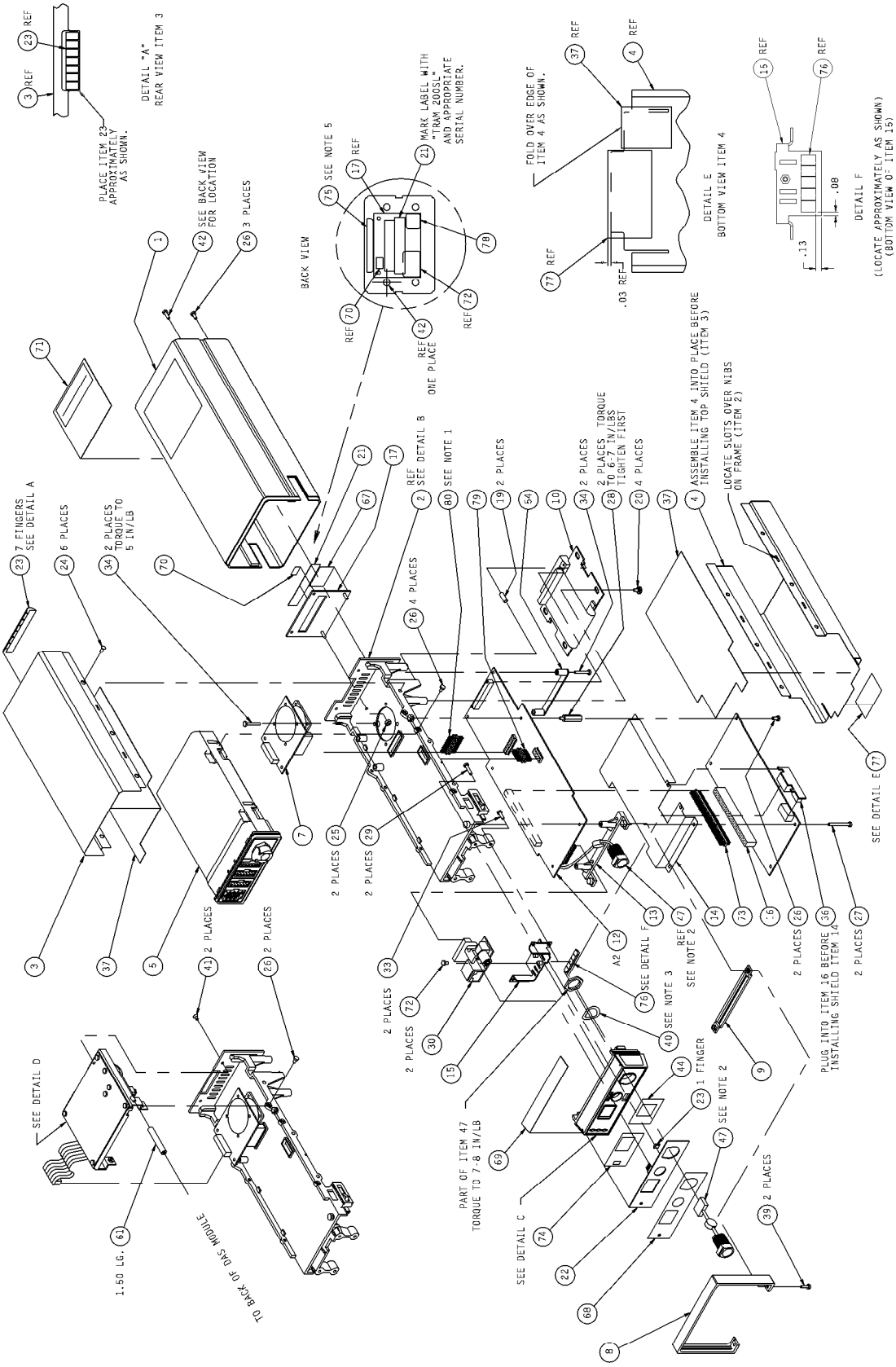

2 of 2

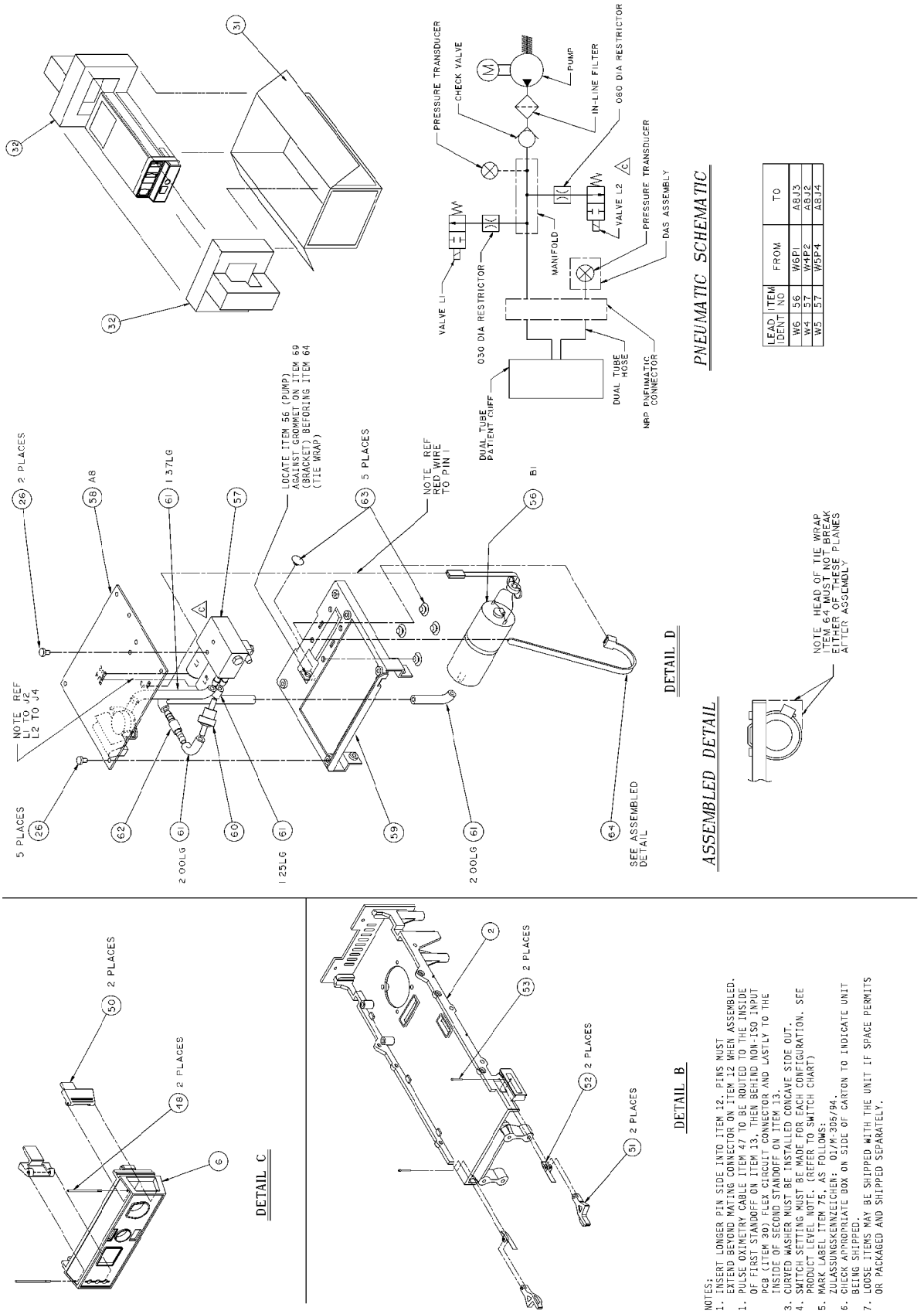
PNEUMATIC SCHEMATIC
PRESSURE TRANSDUCER
CHECK VALVE
PUMP
IN-LINE FILTER
060 DIA RESTRICTOR
VALVE L1
030 DIA RESTRICTOR
MANIFOLD
VALVE L2
PRESSURE TRANSDUCER
DAS ASSEMBLY
DUAL TUBE PATIENT CUFF
DUAL TUBE HOSE
NRP PNEUMATIC CONNECTOR
LEAD IDENT | ITEM NO | FROM | TO
W6 | 56 | W6P1 | A8J3
W4 | 57 | W4P2 | A8J2
W5 | 57 | W5P4 | A8J4
ASSEMBLED DETAIL
DETAIL D
NOTE HEAD OF TIE WRAP ITEM 64 MUST NOT BREAK EITHER OF THESE PLANES AFTER ASSEMBLY
NOTE REF L1 TO J2 L2 TO J4
5 PLACES
2 PLACES
A8
I 57LG
LOCATE ITEM 56 (PUMP) AGAINST GROMMET ON ITEM 59 (BRACKET) BEFORING ITEM 64 (TIE WRAP)
5 PLACES
NOTE REF RED WIRE TO PIN 1
B1
2 00LG
I 25LG
2 00LG
SEE ASSEMBLED DETAIL
DETAIL C
2 PLACES
2 PLACES
DETAIL B
2 PLACES
2 PLACES
2 PLACES
NOTES:
1. INSERT LONGER PIN SIDE INTO ITEM 12. PINS MUST EXTEND BEYOND MATING CONNECTOR ON ITEM 12 WHEN ASSEMBLED.
1. PULSE OXIMETRY CABLE ITEM 47 TO BE ROUTED TO THE INSIDE OF FIRST STANDOFF ON ITEM 13, THEN BEHIND NON-ISO INPUT PCB (ITEM 30) FLEX CIRCUIT CONNECTOR AND LASTLY TO THE INSIDE OF SECOND STANDOFF ON ITEM 13.
3. CURVED WASHER MUST BE INSTALLED CONCAVE SIDE OUT.
4. SWITCH SETTING MUST BE MADE FOR EACH CONFIGURATION. SEE PRODUCT LEVEL NOTE. (REFER TO SWITCH CHART)
5. MARK LABEL ITEM 75, AS FOLLOWS:
ZULASSUNGSKENNZEICHEN: 01/M:305/94.
6. CHECK APPROPRIATE BOX ON SIDE OF CARTON TO INDICATE UNIT BEING SHIPPED.
7. LOOSE ITEMS MAY BE SHIPPED WITH THE UNIT IF SPACE PERMITS OR PACKAGED AND SHIPPED SEPARATELY.

Schematic Diagram PN 411160-001H

1 of 2

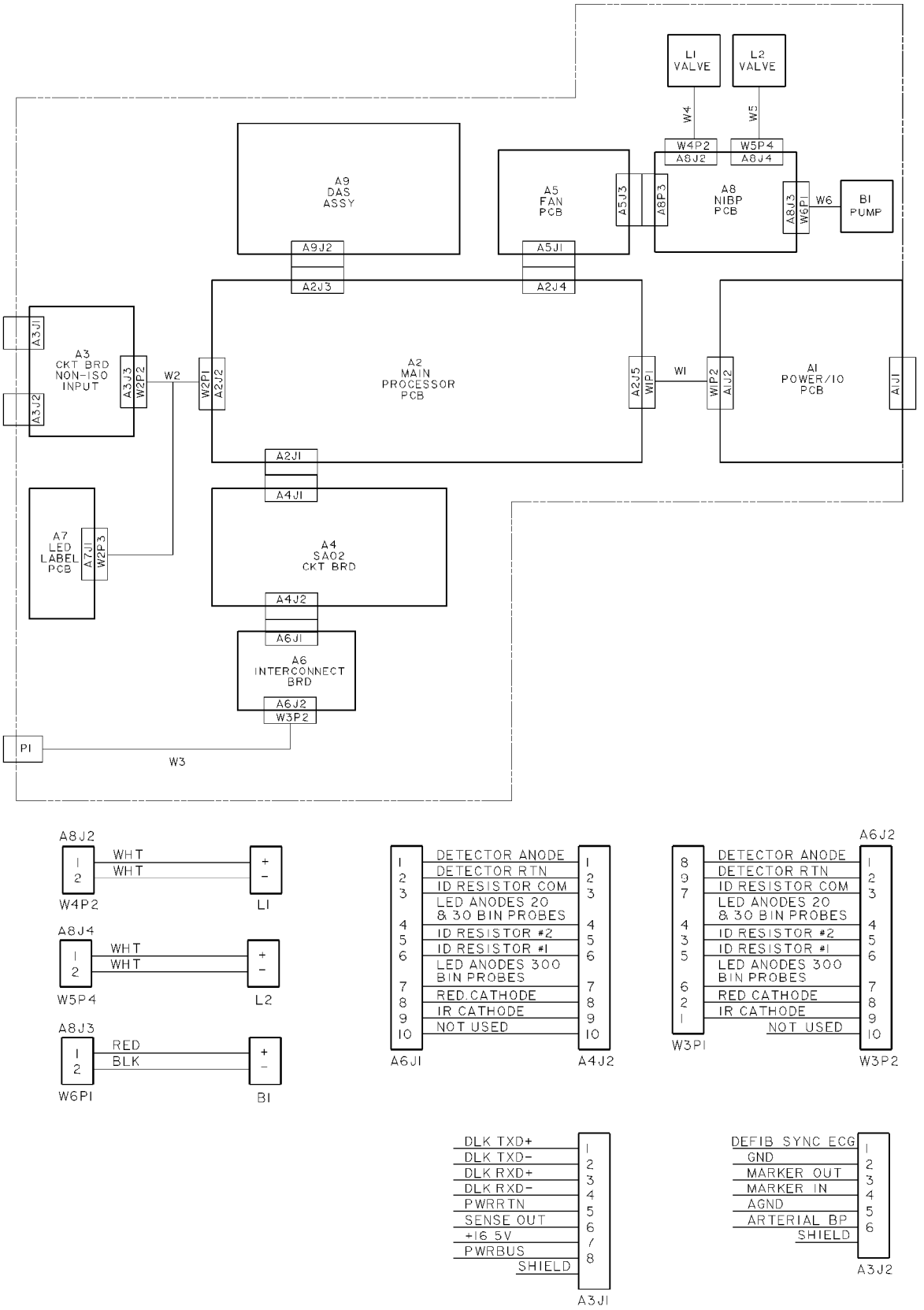

2 of 2

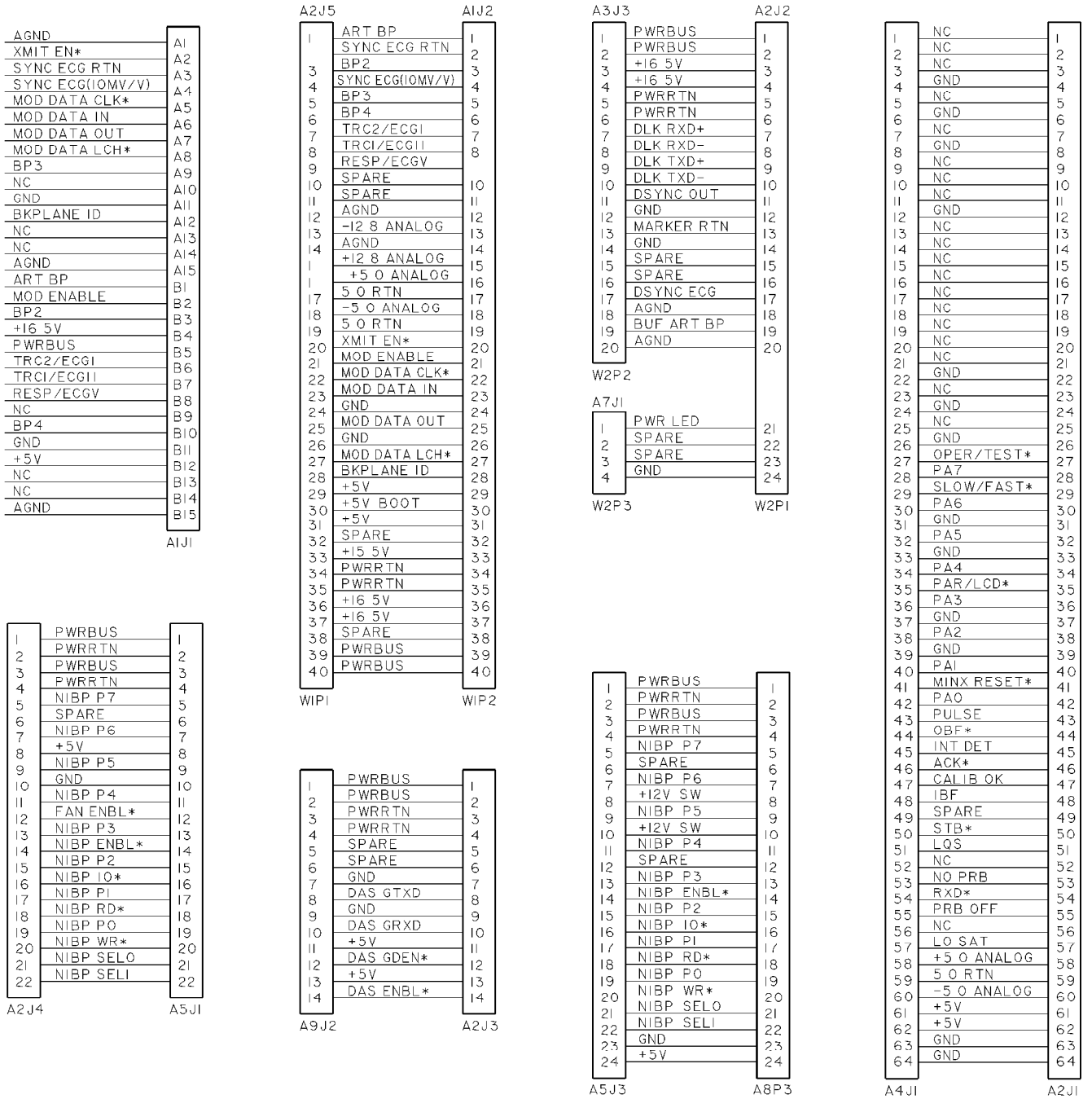
A1J1
AGND
XMIT EN*
SYNC ECG RTN
SYNC ECG(10MV/V)
MOD DATA CLK*
MOD DATA IN
MOD DATA OUT
MOD DATA LCH*
BP3
NC
GND
BKPLANE ID
NC
NC
AGND
ART BP
MOD ENABLE
BP2
+16 5V
PWRBUS
TRC2/ECG1
TRC1/ECG11
RESP/ECGV
NC
BP4
GND
+5V
NC
NC
AGND
A2J5
WIP1
ART BP
SYNC ECG RTN
BP2
SYNC ECG(10MV/V)
BP3
BP4
TRC2/ECG1
TRC1/ECG11
RESP/ECGV
SPARE
SPARE
AGND
-12 8 ANALOG
AGND
+12 8 ANALOG
+5 0 ANALOG
5 0 RTN
-5 0 ANALOG
5 0 RTN
XMIT EN*
MOD ENABLE
MOD DATA CLK*
MOD DATA IN
GND
MOD DATA OUT
GND
MOD DATA LCH*
BKPLANE ID
+5V
+5V BOOT
+5V
SPARE
+15 5V
PWRRTN
PWRRTN
+16 5V
+16 5V
SPARE
PWRBUS
PWRBUS
A1J2
WIP2
A3J3
W2P2
PWRBUS
PWRBUS
+16 5V
+16 5V
PWRRTN
PWRRTN
DLK RXD+
DLK RXD-
DLK TXD+
DLK TXD-
DSYNC OUT
GND
MARKER RTN
GND
SPARE
SPARE
DSYNC ECG
AGND
BUF ART BP
AGND
A7J1
W2P3
PWR LED
SPARE
SPARE
GND
A2J2
W2P1
A2J4
PWRBUS
PWRRTN
PWRBUS
PWRRTN
NIBP P7
SPARE
NIBP P6
+5V
NIBP P5
GND
NIBP P4
FAN ENBL*
NIBP P3
NIBP ENBL*
NIBP P2
NIBP 10*
NIBP P1
NIBP RD*
NIBP P0
NIBP WR*
NIBP SELO
NIBP SELI
A5J1
A9J2
PWRBUS
PWRBUS
PWRRTN
PWRRTN
SPARE
SPARE
GND
DAS GTXD
GND
DAS GRXD
+5V
DAS GDEN*
+5V
DAS ENBL*
A2J3
A5J3
PWRBUS
PWRRTN
PWRBUS
PWRRTN
NIBP P7
SPARE
NIBP P6
+12V SW
NIBP P5
+12V SW
NIBP P4
SPARE
NIBP P3
NIBP ENBL*
NIBP P2
NIBP 10*
NIBP P1
NIBP RD*
NIBP P0
NIBP WR*
NIBP SELO
NIBP SELI
GND
+5V
A8P3
A4J1
NC
NC
NC
GND
NC
GND
NC
GND
NC
NC
NC
GND
NC
NC
NC
NC
NC
NC
NC
NC
NC
GND
NC
GND
NC
GND
OPER/TEST*
PA7
SLOW/FAST*
PA6
GND
PA5
GND
PA4
PAR/LCD*
PA3
GND
PA2
GND
PA1
MINX RESET*
PA0
PULSE
OBF*
INT DET
ACK*
CALIB OK
IBF
SPARE
STB*
LQS
NC
NO PRB
RXD*
PRB OFF
NC
LO SAT
+5 0 ANALOG
5 0 RTN
-5 0 ANALOG
+5V
+5V
GND
GND
A2J1

2 of 2

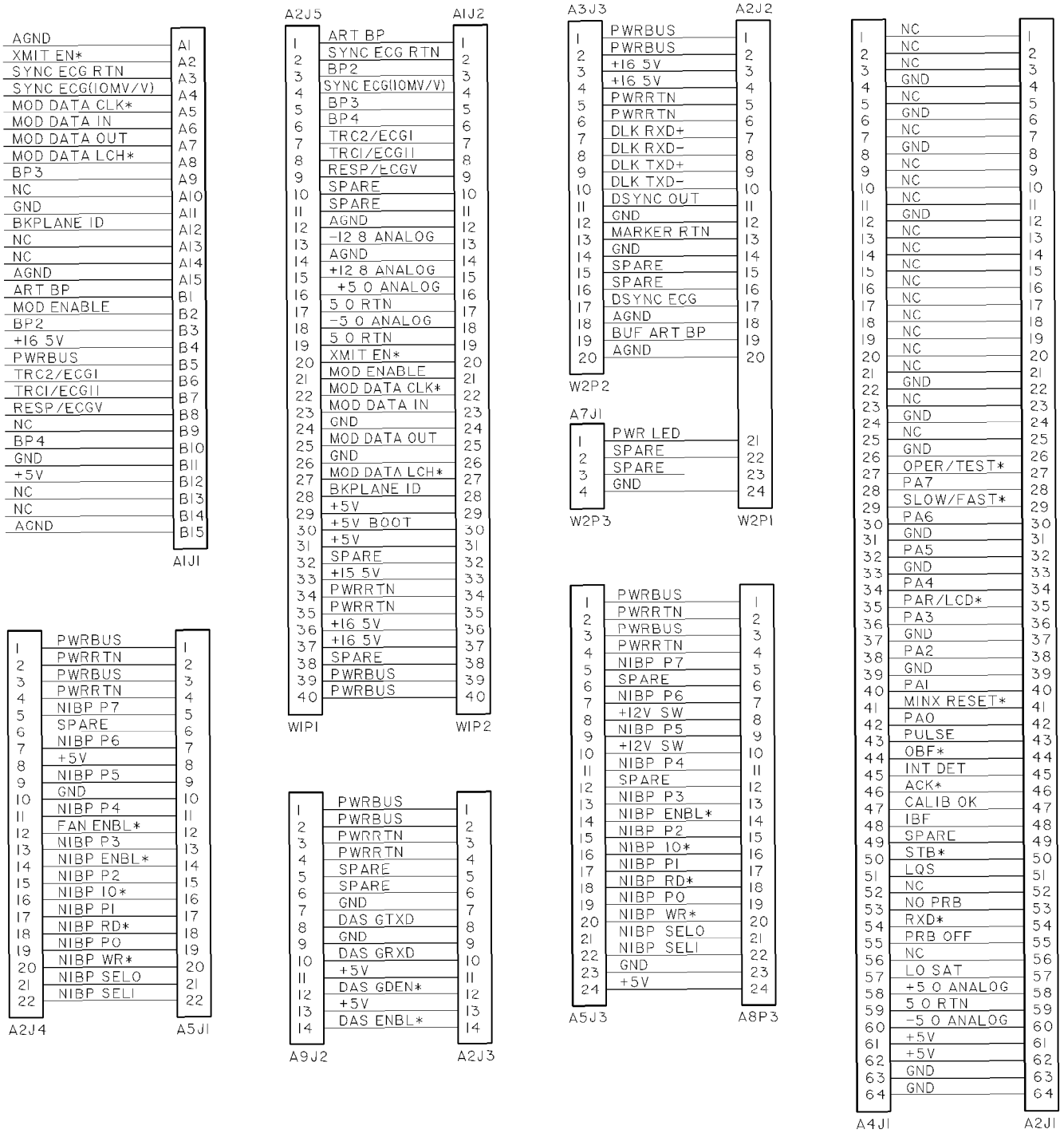
A1J1
AGND
XMIT EN*
SYNC ECG RTN
SYNC ECG(10MV/V)
MOD DATA CLK*
MOD DATA IN
MOD DATA OUT
MOD DATA LCH*
BP3
NC
GND
BKPLANE ID
NC
NC
AGND
ART BP
MOD ENABLE
BP2
+16 5V
PWRBUS
TRC2/ECGI
TRCI/ECGII
RESP/ECGV
NC
BP4
GND
+5V
NC
NC
AGND
A2J5
WIP1
ART BP
SYNC ECG RTN
BP2
SYNC ECG(10MV/V)
BP3
BP4
TRC2/ECGI
TRCI/ECGII
RESP/ECGV
SPARE
SPARE
AGND
-12 8 ANALOG
AGND
+12 8 ANALOG
+5 0 ANALOG
5 0 RTN
-5 0 ANALOG
5 0 RTN
XMIT EN*
MOD ENABLE
MOD DATA CLK*
MOD DATA IN
GND
MOD DATA OUT
GND
MOD DATA LCH*
BKPLANE ID
+5V
+5V BOOT
+5V
SPARE
+15 5V
PWRRTN
PWRRTN
+16 5V
+16 5V
SPARE
PWRBUS
PWRBUS
A1J2
WIP2
A3J3
W2P2
PWRBUS
PWRBUS
+16 5V
+16 5V
PWRRTN
PWRRTN
DLK RXD+
DLK RXD-
DLK TXD+
DLK TXD-
DSYNC OUT
GND
MARKER RTN
GND
SPARE
SPARE
DSYNC ECG
AGND
BUF ART BP
AGND
A2J2
A7J1
W2P3
PWR LED
SPARE
SPARE
GND
W2P1
A2J4
PWRBUS
PWRRTN
PWRBUS
PWRRTN
NIBP P7
SPARE
NIBP P6
+5V
NIBP P5
GND
NIBP P4
FAN ENBL*
NIBP P3
NIBP ENBL*
NIBP P2
NIBP 10*
NIBP PI
NIBP RD*
NIBP PO
NIBP WR*
NIBP SELO
NIBP SELI
A5J1
A9J2
PWRBUS
PWRBUS
PWRRTN
PWRRTN
SPARE
SPARE
GND
DAS GTXD
GND
DAS GRXD
+5V
DAS GDEN*
+5V
DAS ENBL*
A2J3
A5J3
PWRBUS
PWRRTN
PWRBUS
PWRRTN
NIBP P7
SPARE
NIBP P6
+12V SW
NIBP P5
+12V SW
NIBP P4
SPARE
NIBP P3
NIBP ENBL*
NIBP P2
NIBP 10*
NIBP PI
NIBP RD*
NIBP PO
NIBP WR*
NIBP SELO
NIBP SELI
GND
+5V
A8P3
A4J1
NC
NC
NC
GND
NC
GND
NC
GND
NC
NC
NC
GND
NC
NC
NC
NC
NC
NC
NC
NC
GND
NC
GND
NC
GND
OPER/TEST*
PA7
SLOW/FAST*
PA6
GND
PA5
GND
PA4
PAR/LCD*
PA3
GND
PA2
GND
PAI
MINX RESET*
PAO
PULSE
OBF*
INT DET
ACK*
CALIB OK
IBF
SPARE
STB*
LQS
NC
NO PRB
RXD*
PRB OFF
NC
LO SAT
+5 0 ANALOG
5 0 RTN
-5 0 ANALOG
+5V
+5V
GND
GND
A2J1

Parts List PN 411160-001H

Item	Reference Designation	Parts List	Part Number	Qty
1		Cover, Module	400895-001	1
2		Frame	400982-001	1
3		Shield, Top	401679-001	1
4		Shield, Bottom	401679-002	1
5	A9	200 Acquisition Module, 10-Lead	417120-001	1
6		Front Bezel, Lower	401105-004	1
7	A5	Fan PCB	403549-002	1
8		Trim, Rubber, Front Bezel	404620-001	1
9		Mounting Strap, Trim	404621-001	1
10	A1	Power Supply PCB	401309-002	1
12	A2	Module Processor PCB	800210-005	1
13		Circuit Board/Bezel Mount	404672-001	1
14		Shield, Pulse Oximetry PCB	401680-001	1
15		Plate, Chassis Ground, Bottom/Front	402317-001	1
16	A4	Pulse Oximetry PCB	401189-001	1
17		Plate, Chassis Ground, Rear	404680-002	1
19		Spring, Compression	402315-001	2
20		Screw, Power Supply PCB Mounting, SST, 4-40	402214-001	4
21		Label, Model/Serial Number	404525-006	1
22	A7	Power Indicator PCB	403170-008	1
23		Spring, Chassis Ground, Rear	403741-001	AR
24		Screw, FLH, 100˚, Phillips, SST, 4-40 x 3/16	4505-406	6
25		Nut, Hex, 4-40	4521-304	2
26		Screw, BDGH, Phillips, 4-40 x 3/16	45074-406	17
27		Screw, BDGH, Phillips, 4-40 x 1-3/8	45074-438	2
28		Spacer, Male/Female, 4-40 x 0.875	4656-414	2
29		Screw, 4-40 x 7/8	404069-001	2
30	A3, W2	Non-Isolated Input PCB	401315-002	1
31		Carton, Shipping	404211-003	1
32		Foam Insert	404211-004	2
33		Screw, BDGH, Phillips, 4-40 x 5/8	45074-420	2
34		Screw, BDGH, Phillips, 4-40 x 3/4	45074-424	4
36	A6	Interconnect PCB	800006-001	1
37		Insulator, Bottom Shield	404188-001	2
39		Screw, BDGH, Phillips, 4-40 x 3/8	45074-412	2
40		Washer, Pulse Oximetry Connector	4550-250	1
41		Screw, FLH, Phillips, SST, 4-40 x 3/8	4505-412	2
42		Screw, PNH, 4-40 x 0.188, Modified (Determined by Destination)	409009-001	1
42		Screw, BDGH, 4-40 x 0.188 (Determined by Destination)	45075-406	1

Item	Reference Designation	Parts List	Part Number	Qty
43		Tram 100 - 850 A and SL Module Service Manual	404422-065	–
44		Adhesive, Diecut, Right Front	415098-001	AR
47	W3	Harness Assembly, SpO2 – w/Choke	700091-004	1
48		Pin, Latch	402806-001	2
50		Button, Latch	402106-001	2
51		Latch	401682-001	2
52		Spring, Latch	406019-001	2
53		Pin, Latch	406037-001	2
54		Bracket, Power Supply PCB	406254-001	1
56	B1, W6	Pump Assembly, NBP, w/Harness	408169-002	1
57	V1, V2, W4, W5	NBP Valve Assembly	416153-001	1
58	A8	NBP PCB	800316-002	1
59		Bracket, NBP Mounting	404296-001	1
60		Check Valve, 0.125 ID	404675-001	1
61		Tubing, Silastic	401582-001	AR
62		Filter, 43 Micron	404679-001	1
63		Grommet, 1/4 Dia, 1/8 High, 1/16 Panel Thickness	404749-001	5
64		Tie Wrap	4535-002	1
67		Label, TUV (Determined by Destination)	408103-003	1
67		Label, UL (Determined by Destination)	408230-001	1
68		Label, Front, 200SL, English (Determined by Destination)	411173-002	1
68		Label, Front, 200SL, German (Determined by Destination)	411173-003	1
68		Label, Front, 200SL, French (Determined by Destination)	411173-004	1
68		Label, Front, 200SL, Swedish (Determined by Destination)	411173-005	1
68		Label, Front, 200SL, Spanish (Determined by Destination)	411173-006	1
68		Label, Front, 200SL, Italian (Determined by Destination)	411173-007	1
69		Label, Top, English (Determined by Destination)	411173-009	1
69		Label, Top, German (Determined by Destination)	411173-010	1
69		Label, Top, French (Determined by Destination)	411173-011	1
69		Label, Top, Swedish (Determined by Destination)	411173-012	1
69		Label, Top, Spanish (Determined by Destination)	411173-013	1
69		Label, Top, Italian (Determined by Destination)	411173-014	1
71		Label, Cover, English (Determined by Destination)	411173-016	1
71		Label, Cover, German (Determined by Destination)	411173-020	1
71		Label, Cover, French (Determined by Destination)	411173-021	1
71		Label, Cover, Swedish (Determined by Destination)	411173-022	1
71		Label, Cover, Spanish (Determined by Destination)	411173-023	1
71		Label, Cover, French (Determined by Destination)	411173-024	1

Item	Reference Designation	Parts List	Part Number	Qty
71		Label, Cover, International (Determined by Destination)	411173-025	1
72		Screw, PNH, Phillips, SST, 4-40 x 3/16	4502-406	2
73	P1	Connector, Header, 64-Pin, w/Ferrites	409203-001	1
74		Adhesive, Diecut, Front Left	415098-002	1
76		Spring, Chassis Ground, Small	414610-001	AR
77		Adhesive, Mylar	415316-001	1
78		Label, CE Mark	408230-008	1
79		PC Post, 2 x 7	412062-004	1
80		PC Post, 2 x 11	412062-005	1

Assembly Revisions PN 411160

The baseline revision for this assembly is pn 411160-001G. To convert the parts list back to a previous revision, change all part numbers, descriptions, and quantities as indicated in the revision tables given below.

PN 411160-001A

Item	Reference Designation	Description	Revision's Part Number	Baseline Part Number	Qty
5	A9	DAS 200 Module, 10-Lead	411166-001	417120-001	1
11		Label Set, Tram 200SL	411173-001	Not Used	1
12		Module Processor PCB	800210-002	800210-005	1
42		Adhesive, Loctite Prism 411	4851-082	415098-001	AR
46		Bezel Kit, Front	407721-004	Not Used	1
57	V1, V2, W4, W5	NBP Tram Valve Assembly	404459-001	416153-001	1
58	A8	NBP PCB	800316-001	800316-002	1
72		Screw, Phillips, STT, 4-40 x 3/16	Not Used	4502-406	2
73		Connector, Header 64-pin w/Ferrites	Not Used	409203-001	1
74		Adhesive, Diecut Front Left	Not Used	415098-002	1
76		Spring, Chassis Ground, Small	Not Used	414610-001	AR
77		Adhesive, Mylar	Not Used	415316-001	1
78		Label, CE Mark	Not Used	408230-008	1
79		PC Post, 2 x 7	Not Used	412062-004	1
80		PC Post, 2 x 11	Not Used	412062-005	1

PN 411160-001B

Item	Reference Designation	Description	Revision's Part Number	Baseline Part Number	Qty
5	A9	DAS 200 Module, 10-Lead	411166-001	417120-001	1
11		Label Set, Tram 200SL	411173-001	Not Used	1
12		Module Processor PCB	800210-002	800210-005	1
42		Adhesive, Loctite Prism 411	4851-082	415098-001	AR
46		Bezel Kit, Front	407721-004	Not Used	1
57	V1, V2, W4, W5	NBP Valve Assembly	413021-001	416153-001	1
58	A8	NBP PCB	800316-001	800316-002	1
72		Screw, Phillips, STT, 4-40 x 3/16	Not Used	4502-406	2
73		Connector, Header 64-pin w/Ferrites	Not Used	409203-001	1
74		Adhesive, Diecut Front Left	Not Used	415098-002	1
76		Spring, Chassis Ground, Small	Not Used	414610-001	AR
77		Adhesive, Mylar	Not Used	415316-001	1
78		Label, CE Mark	Not Used	408230-008	1
79		PC Post, 2 x 7	Not Used	412062-004	1
80		PC Post, 2 x 11	Not Used	412062-005	1

PN 411160-001C

Item	Reference Designation	Description	Revision's Part Number	Baseline Part Number	Qty
5	A9	DAS 200 Module, 10-Lead	411166-001	417120-001	1
12		Module Processor PCB	800210-002	800210-005	1
42		Adhesive, Loctite Prism 411	4851-082	415098-001	AR
57	V1, V2, W4, W5	NBP Valve Assembly	413021-001	416153-001	1
58	A8	NBP PCB	800316-001	800316-002	1
74		Adhesive, Diecut Front Left	Not Used	415098-002	1
76		Spring, Chassis Ground, Small	Not Used	414610-001	AR
77		Adhesive, Mylar	Not Used	415316-001	1
78		Label, CE Mark	Not Used	408230-008	1
79		PC Post, 2 x 7	Not Used	412062-004	1
80		PC Post, 2 x 11	Not Used	412062-005	1

PN 411160-001D

This revision was a documentation change that does not affect this manual.
Refer to pn 411160-001C for changes to the parts list.

PN 411160-001E

Item	Reference Designation	Description	Revision's Part Number	Baseline Part Number	Qty
5	A9	DAS 200 Module, 10-Lead	411166-001	417120-001	1
12		Module Processor PCB	800210-002	800210-005	1
57	V1, V2, W4, W5	NBP Valve Assembly	413021-001	416153-001	1
58	A8	NBP PCB	800316-001	800316-002	1
76		Spring, Chassis Ground, Small	Not Used	414610-001	AR
77		Adhesive, Mylar	Not Used	415316-001	1
78		Label, CE Mark	Not Used	408230-008	1
79		PC Post, 2 x 7	Not Used	412062-004	1
80		PC Post, 2 x 11	Not Used	412062-005	1

PN 411160-001F

This revision was a documentation change that does not affect this manual.
Refer to pn 411160-001E for changes to the parts list.

PN 411160-001G

Item	Reference Designation	Description	Revision's Part Number	Baseline Part Number	Qty
5	A9	DAS 200 Module, 10-Lead	411166-001	417120-001	1
57	V1, V2, W4, W5	NBP Valve Assembly	413021-001	416153-001	1
58	A8	NBP PCB	800316-001	800316-002	1

9 TRAM 250SL MODULE PN 412651

General **9-2**
Circuit Boards 9-2

Exploded View PN 412651-001H **9-3**

Schematic Diagram PN 412651-001H **9-5**

Parts List PN 412651-001H **9-7**

Assembly Revisions PN 412651 ..... **9-10**

General

Circuit Boards

Details about the circuit boards contained in the Tram 250SL are discussed in later chapters arranged by part number.

Table 8-1. Circuit Board Overview

Module Type	Upper Level	Leadwire Configuration	DAS Module	Acquisition Processor PCB	Module Processor PCB
Tram 250SL	412651-001A–G	10-Leadwire	411166-001	800330-006	800210-005
Tram 250SL	412651-001H	10-Leadwire	417120-001 (Replaced 411166-001)	801040-001	800210-005

Exploded View

PN 412651-001H

1 of 2

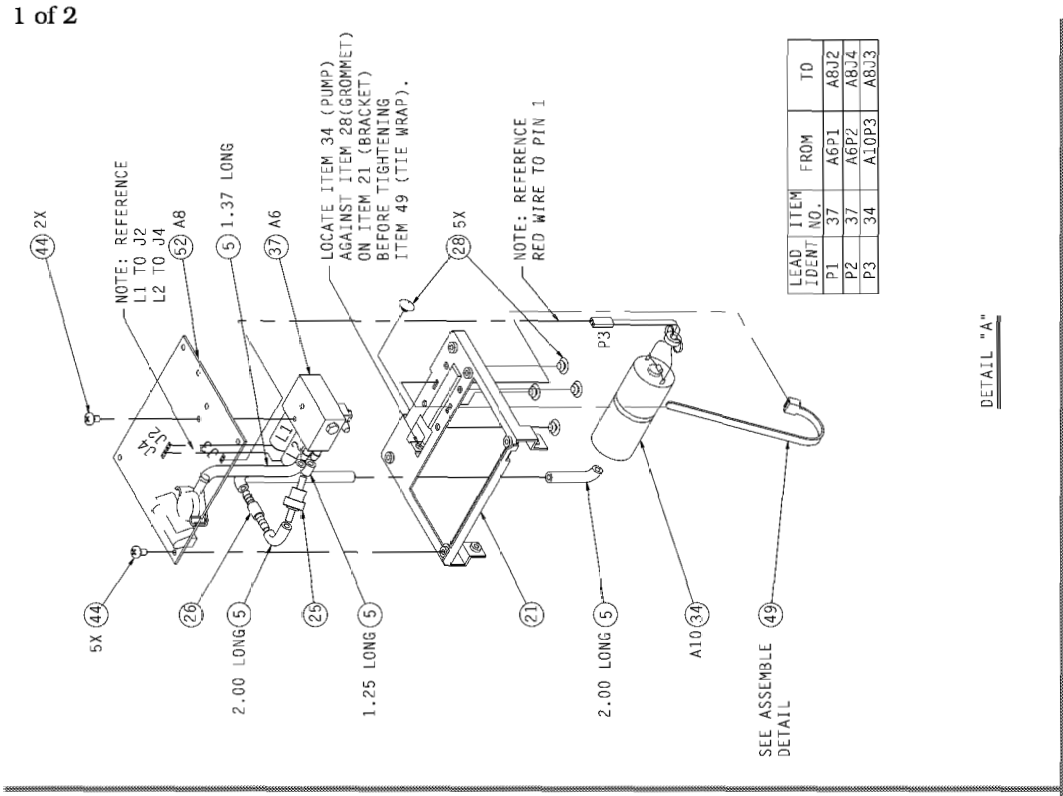

LEAD IDENT	ITEM NO.	FROM	TO
P1	37	A6P1	A8J2
P2	37	A6P2	A8J4
P3	34	A10P3	A8J3

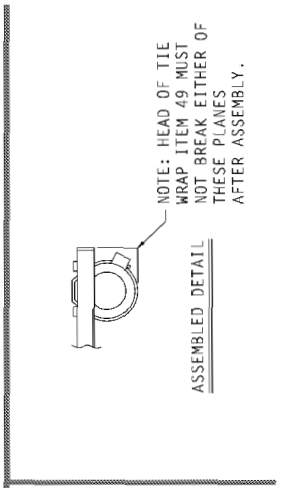

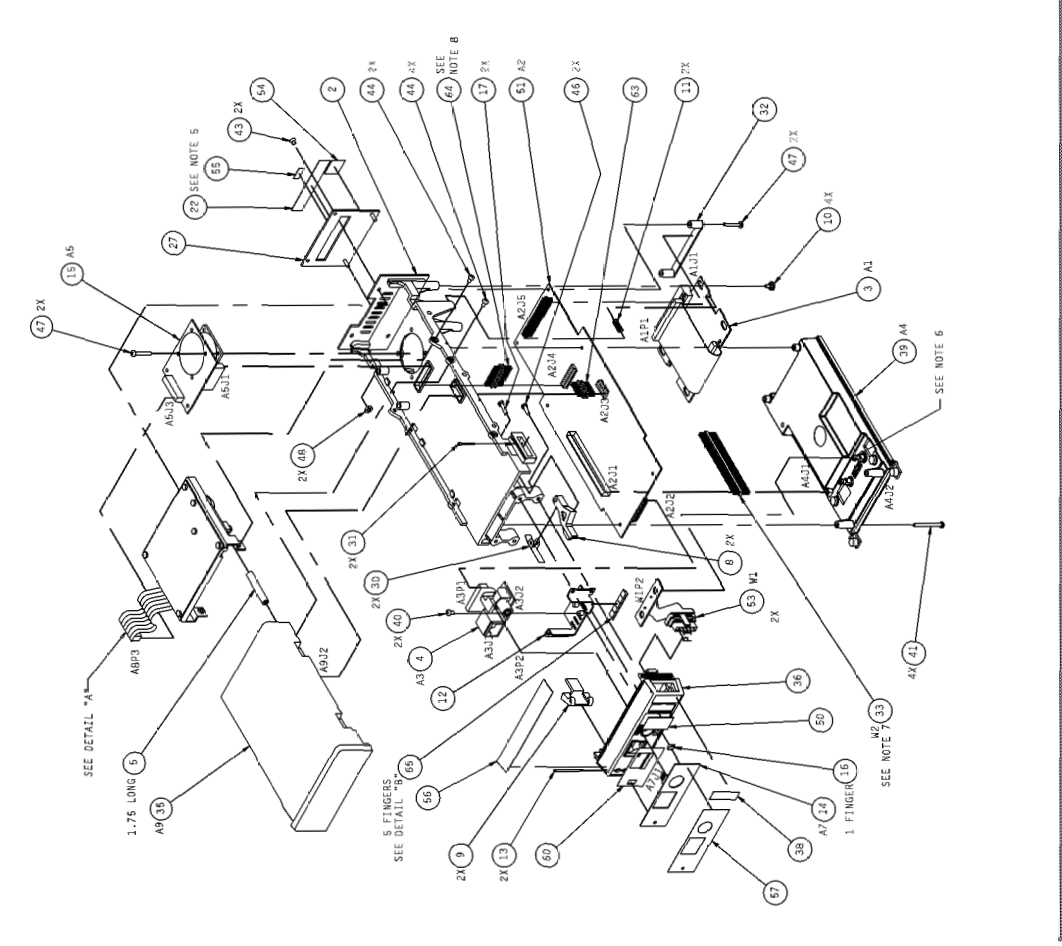

NOTES:
1. WHEN SHIELD (ITEM 7) IS INSTALLED, THE TAB SHOULD TUCK INTO THE FRONT BEZEL (ITEM 36) AND BE IN CONTACT WITH THE SHIELDING FINGERS (ITEM 16) ON THE BOTTOM OF THE BRACKET (ITEM 12).
2. SWITCH SETTINGS MUST BE MADE FOR EACH CONFIGURATION (SEE SWITCH CHART SHEET 2).
3. CHECK APPROPRIATE BOX ON SIDE OF CARTON TO INDICATE UNIT BEING SHIPPED.
4. LOOSE ITEMS MAY BE SHIPPED WITH THE UNIT IF SPACE PERMITS OR PACKAGED AND SHIPPED SEPARATELY.
5. MARK LABEL WITH MODEL NUMBER, SERIAL NUMBER, AND BAR CODE.
6. INSERT TWO HOLES OF FLEX PCB (ITEM 53) ONTO 1/4-TURN STANDOFF (ITEM 39) UNTIL CONNECTOR ON PCB FLEX BOTTOMS OUT. THEN LOCK THE STANDOFFS BY TURNING THE HEX SCREW OF THE STANDOFF 1/4-TURN CLOCKWISE.
7. INSERT THE SHORT LEADS OF CONNECTOR (ITEM 33) INTO PCB TRAM CPU (ITEM 51).
8. INSERT LONGER PIN SIDE INTO ITEM 51. PINS MUST EXTEND BEYOND MATING CONNECTOR ON ITEM 51 WHEN ASSEMBLED.

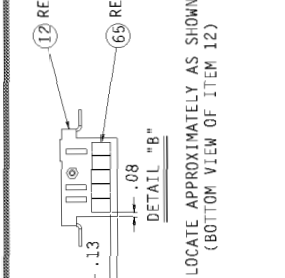

2 of 2

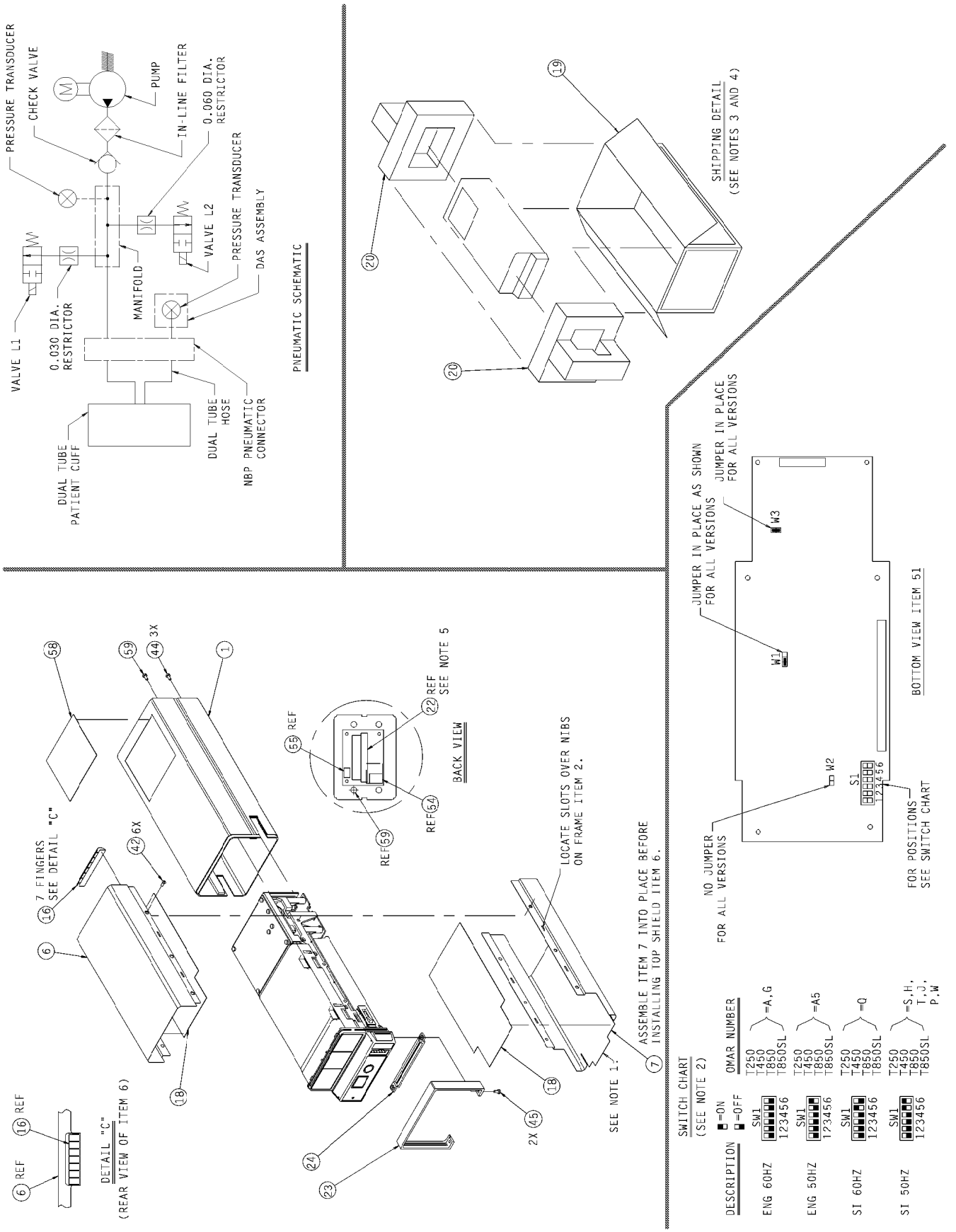
PRESSURE TRANSDUCER
CHECK VALVE
PUMP
IN-LINE FILTER
0.060 DIA. RESTRICTOR
PRESSURE TRANSDUCER
VALVE L2
DAS ASSEMBLY
MANIFOLD
VALVE L1
0.030 DIA. RESTRICTOR
DUAL TUBE PATIENT CUFF
DUAL TUBE HOSE
NBP PNEUMATIC CONNECTOR
PNEUMATIC SCHEMATIC
SHIPPING DETAIL (SEE NOTES 3 AND 4)
JUMPER IN PLACE AS SHOWN FOR ALL VERSIONS
JUMPER IN PLACE FOR ALL VERSIONS
W3
W1
W2
S1
123456
BOTTOM VIEW ITEM 51
NO JUMPER FOR ALL VERSIONS
FOR POSITIONS SEE SWITCH CHART
7 FINGERS SEE DETAIL "C"
6X
3X
REF SEE NOTE 5
BACK VIEW
REF
LOCATE SLOTS OVER NIBS ON FRAME ITEM 2.
ASSEMBLE ITEM 7 INTO PLACE BEFORE INSTALLING TOP SHIELD ITEM 6.
SEE NOTE 1.
2X
DETAIL "C" (REAR VIEW OF ITEM 6)
SWITCH CHART (SEE NOTE 2)
DESCRIPTION
ON
OFF
SW1
OMAR NUMBER
ENG 60HZ
ENG 50HZ
SI 60HZ
SI 50HZ
T250
T450
T850
T850SL
=A,G
=A5
=Q
=S,H,T,J,P,W

Schematic Diagram PN 412651-001H

1 of 2

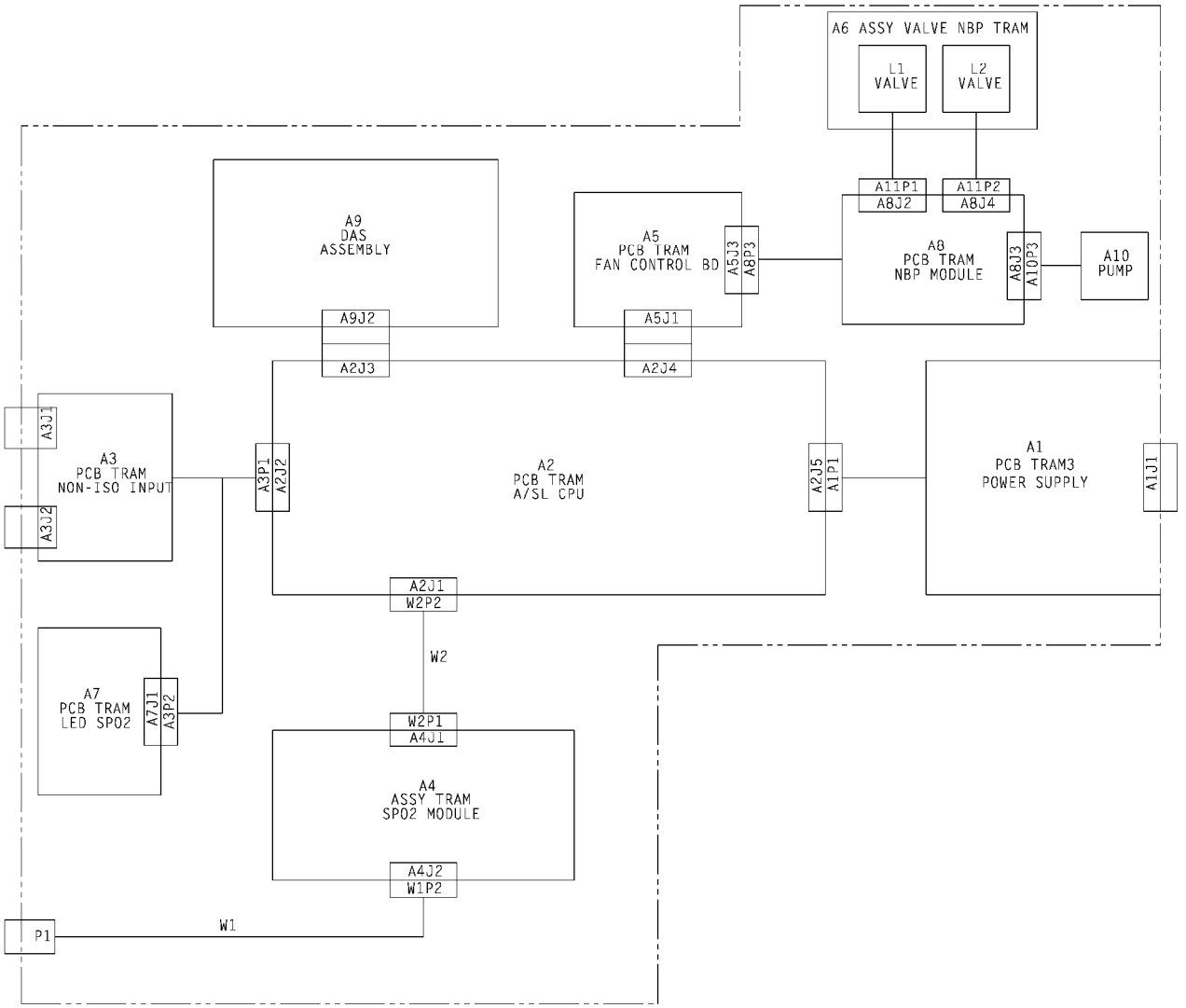

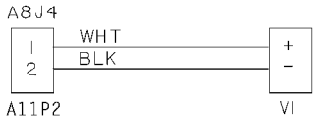

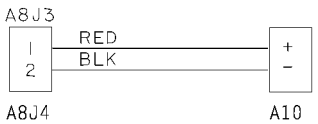

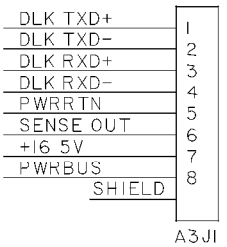

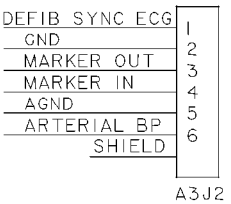

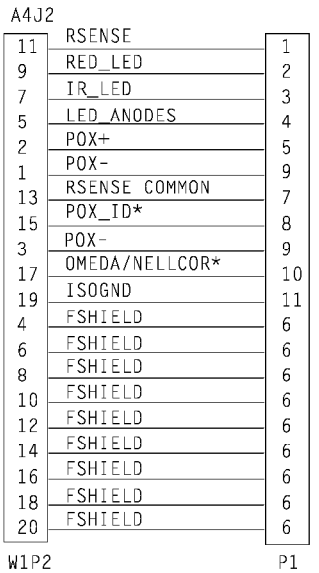

2 of 2

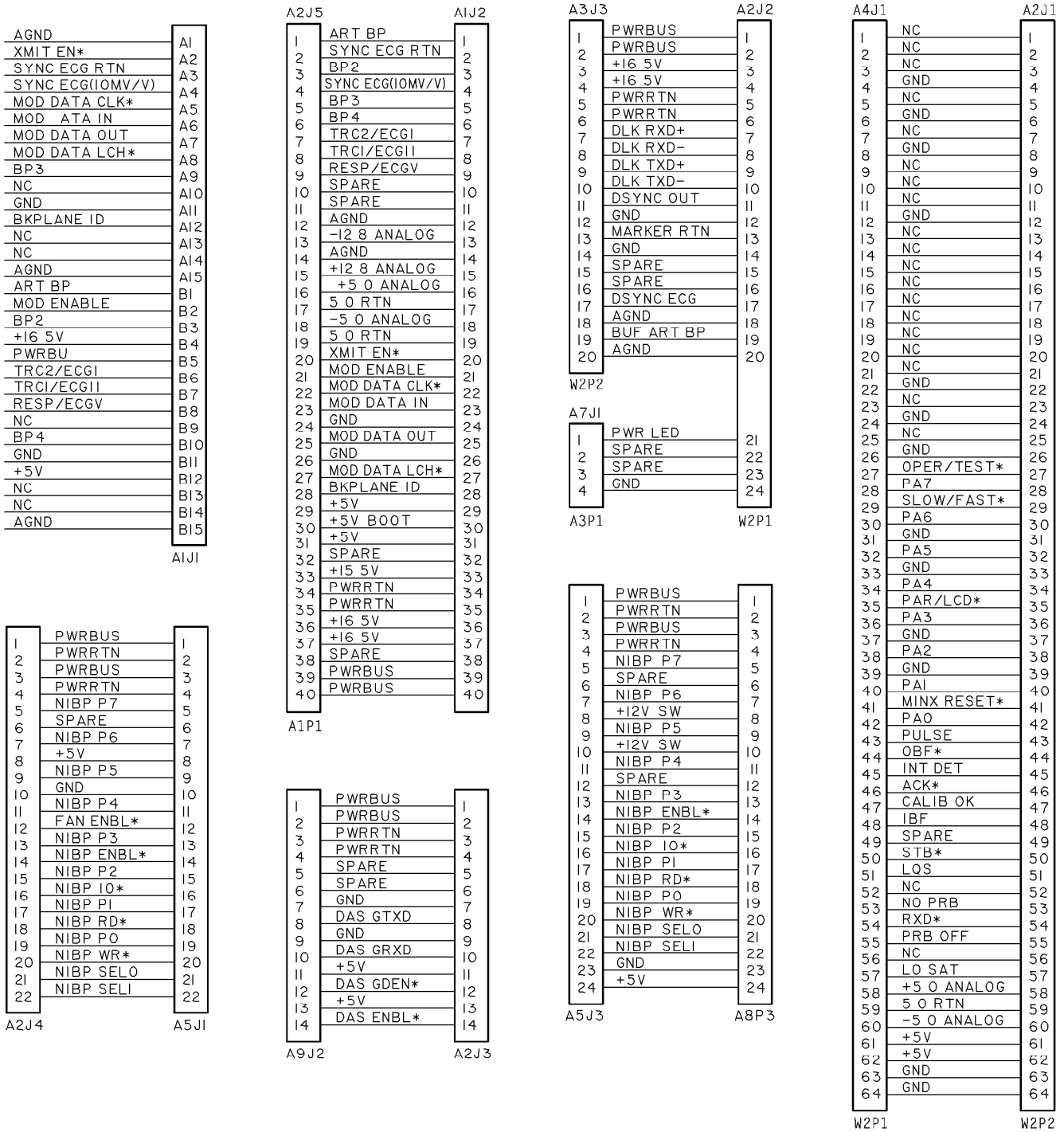
A1J1
AGND
XMIT EN*
SYNC ECG RTN
SYNC ECG(10MV/V)
MOD DATA CLK*
MOD DATA IN
MOD DATA OUT
MOD DATA LCH*
BP3
NC
GND
BKPLANE ID
NC
NC
AGND
ART BP
MOD ENABLE
BP2
+16 5V
PWRBU
TRC2/ECGI
TRCI/ECGII
RESP/ECGV
NC
BP4
GND
+5V
NC
NC
AGND
A2J5
A1P1
ART BP
SYNC ECG RTN
BP2
SYNC ECG(10MV/V)
BP3
BP4
TRC2/ECGI
TRCI/ECGII
RESP/ECGV
SPARE
SPARE
AGND
-12 8 ANALOG
AGND
+12 8 ANALOG
+5 0 ANALOG
5 0 RTN
-5 0 ANALOG
5 0 RTN
XMIT EN*
MOD ENABLE
MOD DATA CLK*
MOD DATA IN
GND
MOD DATA OUT
GND
MOD DATA LCH*
BKPLANE ID
+5V
+5V BOOT
+5V
SPARE
+15 5V
PWRRTN
PWRRTN
+16 5V
+16 5V
SPARE
PWRBUS
PWRBUS
A1J2
A3J3
W2P2
PWRBUS
PWRBUS
+16 5V
+16 5V
PWRRTN
PWRRTN
DLK RXD+
DLK RXD-
DLK TXD+
DLK TXD-
DSYNC OUT
GND
MARKER RTN
GND
SPARE
SPARE
DSYNC ECG
AGND
BUF ART BP
AGND
A2J2
A7J1
A3P1
PWR LED
SPARE
SPARE
GND
W2P1
A2J4
A5J1
PWRBUS
PWRRTN
PWRBUS
PWRRTN
NIBP P7
SPARE
NIBP P6
+5V
NIBP P5
GND
NIBP P4
FAN ENBL*
NIBP P3
NIBP ENBL*
NIBP P2
NIBP 10*
NIBP PI
NIBP RD*
NIBP PO
NIBP WR*
NIBP SELO
NIBP SELI
A9J2
A2J3
PWRBUS
PWRBUS
PWRRTN
PWRRTN
SPARE
SPARE
GND
DAS GTXD
GND
DAS GRXD
+5V
DAS GDEN*
+5V
DAS ENBL*
A5J3
A8P3
PWRBUS
PWRRTN
PWRBUS
PWRRTN
NIBP P7
SPARE
NIBP P6
+12V SW
NIBP P5
+12V SW
NIBP P4
SPARE
NIBP P3
NIBP ENBL*
NIBP P2
NIBP 10*
NIBP PI
NIBP RD*
NIBP PO
NIBP WR*
NIBP SELO
NIBP SELI
GND
+5V
A4J1
W2P1
A2J1
W2P2
NC
NC
NC
GND
NC
GND
NC
GND
NC
NC
NC
GND
NC
NC
NC
NC
NC
NC
NC
NC
GND
NC
GND
NC
GND
OPER/TEST*
PA7
SLOW/FAST*
PA6
GND
PA5
GND
PA4
PAR/LCD*
PA3
GND
PA2
GND
PAI
MINX RESET*
PAO
PULSE
OBF*
INT DET
ACK*
CALIB OK
IBF
SPARE
STB*
LQS
NC
NO PRB
RXD*
PRB OFF
NC
LO SAT
+5 0 ANALOG
5 0 RTN
-5 0 ANALOG
+5V
+5V
GND
GND

Parts List PN 412651-001H

Item	Reference Designation	Parts List	Part Number	Qty
1		Cover, Module	400895-001	1
2		Frame	400982-001	1
3	A1	Power Supply PCB	401309-002	1
4	A3	Non-Isolated Input PCB	401315-002	1
5		Tubing, Silastic	401582-001	AR
6		Shield, Top	401679-001	1
7		Shield, Bottom	401679-002	1
8		Latch	401682-001	2
9		Button, Latch	402106-001	2
10		Screw, Shoulder	402214-001	4
11		Spring, Compression	402315-001	2
12		Plate, Chassis Ground, Bottom/Front	402317-001	1
13		Pin, Latch	402806-001	2
14	A7	Power Indicator PCB	403170-011	1
15	A5	Fan PCB	403549-002	1
16		Spring, Chassis Ground, Rear	403741-001	AR
17		Screw, BDGH, Phillips, 4-40 x 7/8	404069-001	2
18		Insulator, Bottom Shield	404188-001	2
19		Carton, Shipping	404211-003	1
20		Foam, Insert	404211-004	
21		Bracket, NBP Mounting	404296-001	1
22		Label, Blank	404525-006	1
23		Trim, Rubber, Front Bezel	404620-001	1
24		Mounting Strap, Trim	404621-001	1
25		Check Valve, 0.125 ID	404675-001	1
26		Filter, 43 Micron	404679-001	1
27		Plate, Chassis Ground, Rear	404680-002	1
28		Grommet, 1/4 Dia, 1/8 High, 1/16 Panel Thickness	404749-001	5
30		Spring, Latch	406019-001	2
31		Pin, Latch	406037-001	2
32		Bracket, Power Supply PCB	406254-001	1
33	W2	Connector, Header, Dual, 64-Pin	407452-002	1
34	A10	Pump Assembly, NBP, w/Harness	408169-002	1
35	A9	200 Acquisition Module, 10-Lead	417120-001	1
36		Front Bezel, Tram	412659-001	1
37	A6	NBP Valve Assembly	416153-001	1
38		Label, Pulse Oximetry, Nellcor	413831-002	1
39	A4	Pulse Oximetry Assembly (Including Pulse Oximetry PCB, PN 800674-00X)	414409-001	1
40		Screw, BDGH, Phillips, 4-40 x 3/16	4502-406	2
41		Screw, BDGH, Phillips, 4-40 x 1-1/4	4502-440	4

Item	Reference Designation	Parts List	Part Number	Qty
42		Screw, FLH, 100˚, Phillips, SST, 4-40 x 3/16	4505-406	6
43		Screw, FLH, Phillips, SST, 4-40 x 3/8	4505-412	2
44		Screw, BDGH, Phillips, 4-40 x 3/16	45074-406	15
45		Screw, BDGH, Phillips, 4-40 x 3/8	45074-412	2
46		Screw, BDGH, Phillips, 4-40 x 5/8	45074-420	2
47		Screw, BDGH, Phillips, 4-40 x 3/4	45074-424	4
48		Nut, Hex, 4-40	4521-304	2
49		Tie Wrap	4535-002	1
50		Adhesive, Diecut, Front Right	415098-003	1
51	A2	Module Processor PCB	800210-005	1
52	A8	NPB PCB	800316-002	1
53	W1	Harness, Pulse Oximetry PCB-to-Connector	800892-001	1
54		Label, UL Listed	408230-002	1
55		Label, 60 Hertz	411091-018	1
55		Label, 50 Hertz	411091-019	1
56		Label, Top, English (Determined by Destination)	411173-009	1
56		Label, Top, German (Determined by Destination)	411173-010	1
56		Label, Top, French (Determined by Destination)	411173-011	1
56		Label, Top, Swedish (Determined by Destination)	411173-012	1
56		Label, Top, Spanish (Determined by Destination)	411173-013	1
56		Label, Top, Italian (Determined by Destination)	411173-014	1
57		Label, Front, 250SL, English (Determined by Destination)	413835-001	1
57		Label, Front, 250SL, German (Determined by Destination)	413835-002	1
57		Label, Front, 250SL, French (Determined by Destination)	413835-003	1
57		Label, Front, 250SL, Swedish (Determined by Destination)	413835-004	1
57		Label, Front, 250SL, Spanish (Determined by Destination)	413835-005	1
57		Label, Front, 250SL, Italian (Determined by Destination)	413835-006	1
57		Label, Front, 250SL, Dutch (Determined by Destination)	413835-007	1
58		Label, Cover, English (Determined by Destination)	414045-001	1
58		Label, Cover, German (Determined by Destination)	414045-002	1
58		Label, Cover, French (Determined by Destination)	414045-003	1
58		Label, Cover, Swedish (Determined by Destination)	414045-004	1
58		Label, Cover, Spanish (Determined by Destination)	414045-005	1
58		Label, Cover, Italian (Determined by Destination)	414045-006	1
58		Label, Cover, International (Determined by Destination)	414045-007	1
59		Spring, Chassis Ground, Small	414610-001	AR
59		Screw, PHD, 4-40 x 0.188, Modified (Determined by Destination)	409009-001	1

Item	Reference Designation	Parts List	Part Number	Qty
59		Screw, PHD, 4-40 x 0.188 (Determined by Destination)	45074-406	1
60		Adhesive, Diecut, Front Left	415098-002	1
61		Tram 100 - 850 A and SL Module Service Manual	404422-065	1
62		Label, CE Mark	408230-008	1
63		PC Post, 2 x 7	412062-004	1
64		PC Post, 2 x 11	412062-005	1

Assembly Revisions PN 412651

The baseline revision for this assembly is pn 412651-001H. To convert the parts list back to a previous revision, change all part numbers, descriptions, and quantities as indicated in the revision tables given below.

PN 412651-001A

Item	Reference Designation	Description	Revision's Part Number	Baseline Part Number	Qty
35	A9	DAS 200 Module, 10-Lead	411166-001	417120-001	1
37	A6	NBP Valve Assembly	413021-001	416153-001	1
51		Module Processor PCB	800210-002	800210-005	1
52	A8	NBP PCB	800316-001	800316-002	1
59		Spring, Chassis Ground, Small	Not Used	414610-001	AR
60		Adhesive, Front Diecut, Left	Not Used	415098-002	1
62		Label, CE Mark	Not Used	408230-008	1
63		PC Post, 2 x 7	Not Used	412062-004	1
64		PC Post, 2 x 11	Not Used	412062-005	1

PN 412651-001B

This revision was a documentation change that does not affect this manual.
Refer to pn 412651-001A for changes to the parts list.

PN 412651-001C

Item	Reference Designation	Description	Revision's Part Number	Baseline Part Number	Qty
35	A9	DAS 200 Module, 10-Lead	411166-001	417120-001	1
37	A6	NBP Valve Assembly	413021-001	416153-001	1
51		Module Processor PCB	800210-002	800210-005	1
52	A8	NBP PCB	800316-001	800316-002	1
62		Label, CE Mark	Not Used	408230-008	1
63		PC Post, 2 x 7	Not Used	412062-004	1
64		PC Post, 2 x 11	Not Used	412062-005	1

PN 412651-001D

This revision was a documentation change that does not affect this manual.
Refer to pn 412651-001C for changes to the parts list.

PN 412651-001E

This revision was a documentation change that does not affect this manual.
Refer to pn 412651-001C for changes to the parts list.

PN 412651-001F

Item	Reference Designation	Description	Revision's Part Number	Baseline Part Number	Qty
35	A9	DAS 200 Module, 10-Lead	411166-001	417120-001	1
37	A6	NBP Valve Assembly	413021-001	416153-001	1
52	A8	NBP PCB	800316-001	800316-002	1

PN 412651-001G

Item	Reference Designation	Description	Revision's Part Number	Baseline Part Number	Qty
35	A9	DAS 200 Module, 10-Lead	411166-001	417120-001	1
52	A8	NBP PCB	800316-001	800316-002	1

For your notes

10 TRAM 400A/SL MODULE PN 410496/411161

General **10-2**
Circuit Boards 10-2

Exploded View PN 410496-001D **10-3**

Schematic Diagram PN 410496-001D **10-4**

Parts List PN 410496-001D **10-7**

Tram 400A Module Assembly Revisions **10-9**

Exploded View PN 411161-001J **10-10**

Schematic Diagram PN 411161-001J **10-12**

Parts List PN 411161-001J **10-14**

Assembly Revisions PN 411161 ..... **10-17**

General

Circuit Boards

Details about the circuit boards contained in the Tram 400A/SL are discussed in later chapters arranged by part number.

Table 8-1. Circuit Board Overview

Module Type	Upper Level	Leadwire Configuration	DAS Module	Acquisition Processor PCB	Module Processor PCB
Tram 400A	410496-001A–C	5-Leadwire	410495-001	800330-009	800210-005
Tram 400SL	411161-001A–H	10-Leadwire	411167-001	800330-010	800210-005
Tram 400SL	411161-001J	10-Leadwire	417121-001 (Replaced 411167-001)	801040-001	800210-005

Exploded View PN 410496-001D

1 of 2

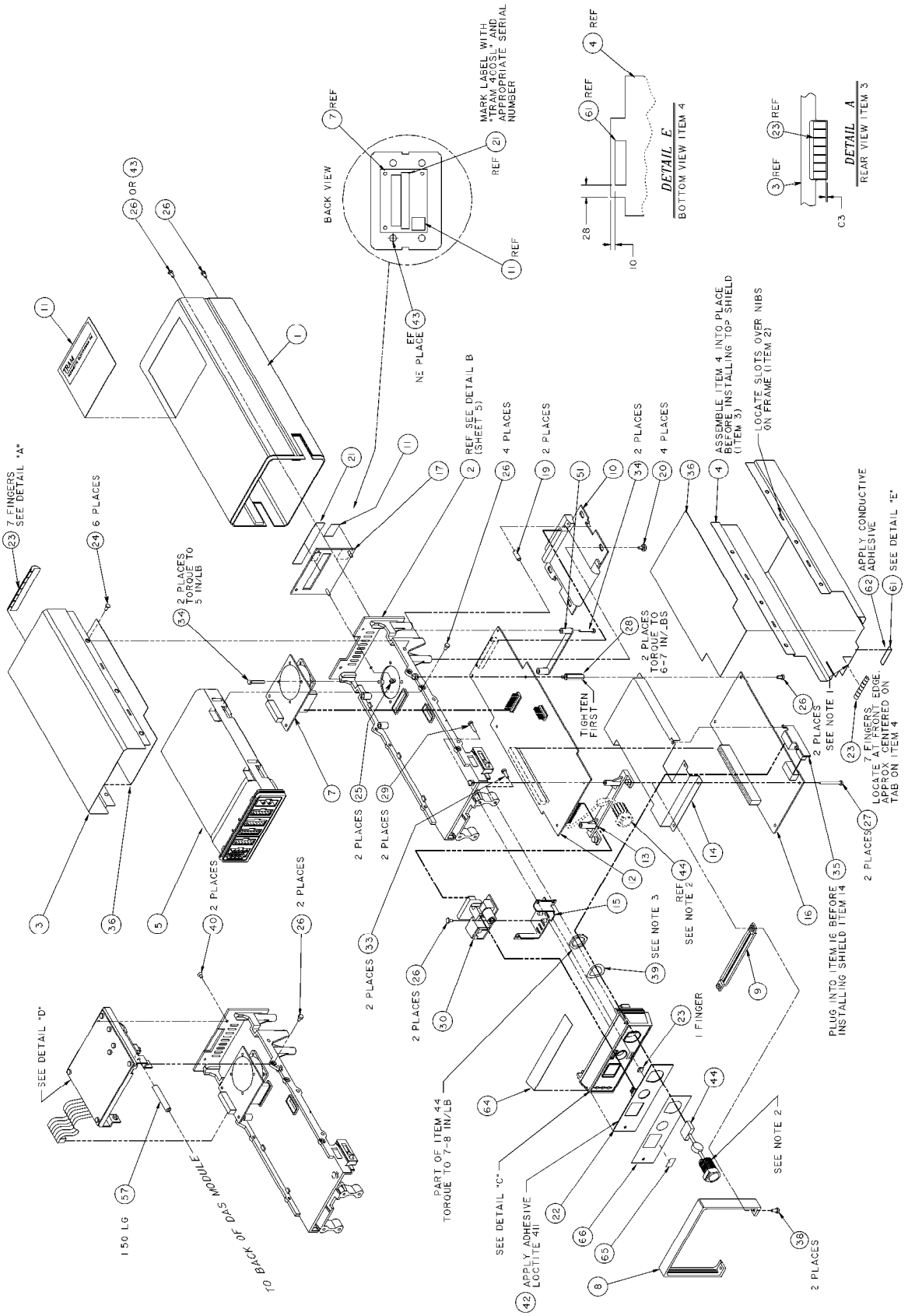

2 of 2

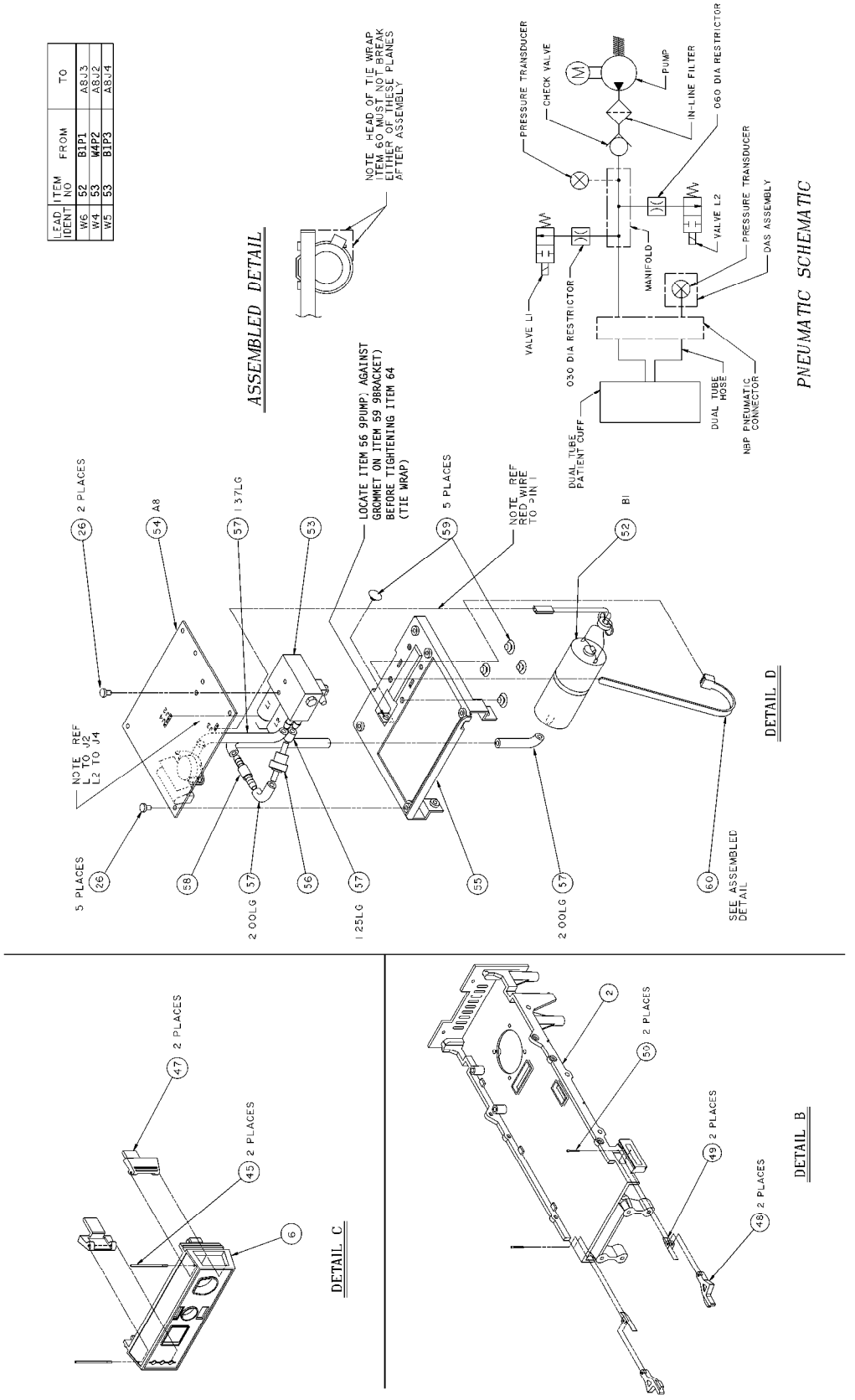
LEAD IDENT
ITEM NO
FROM
TO
W6 52 B1P1 ABJ3
W4 53 W4P2 ABJ2
W5 53 B1P3 ABJ4
ASSEMBLED DETAIL
NOTE HEAD OF TIE WRAP ITEM 60 MUST NOT BREAK EITHER OF THESE PLANES AFTER ASSEMBLY
LOCATE ITEM 56 (PUMP) AGAINST GROMMET ON ITEM 59 (BRACKET) BEFORE TIGHTENING ITEM 64 (TIE WRAP)
NOTE REF L1 TO J2 L2 TO J4
NOTE REF RED WIRE TO PIN 1
PRESSURE TRANSDUCER
CHECK VALVE
PUMP
IN-LINE FILTER
060 DIA RESTRICTOR
VALVE L1
030 DIA RESTRICTOR
MANIFOLD
VALVE L2
PRESSURE TRANSDUCER
DAS ASSEMBLY
DUAL TUBE PATIENT CUFF
DUAL TUBE HOSE
NBP PNEUMATIC CONNECTOR
PNEUMATIC SCHEMATIC
DETAIL D
DETAIL C
DETAIL B
SEE ASSEMBLED DETAIL
2 PLACES
5 PLACES

Schematic Diagram PN 410496-001D

1 of 2

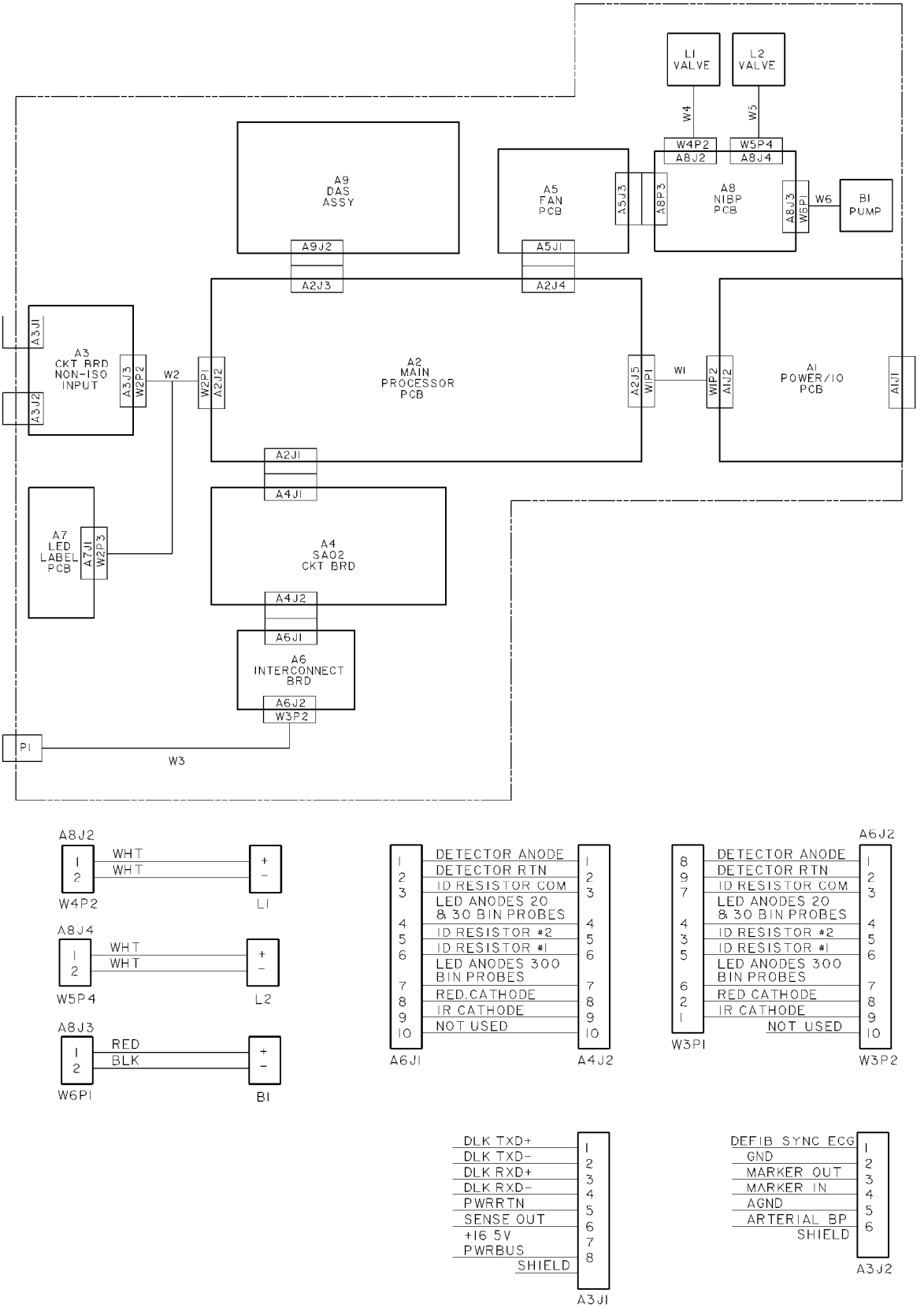

2 of 2

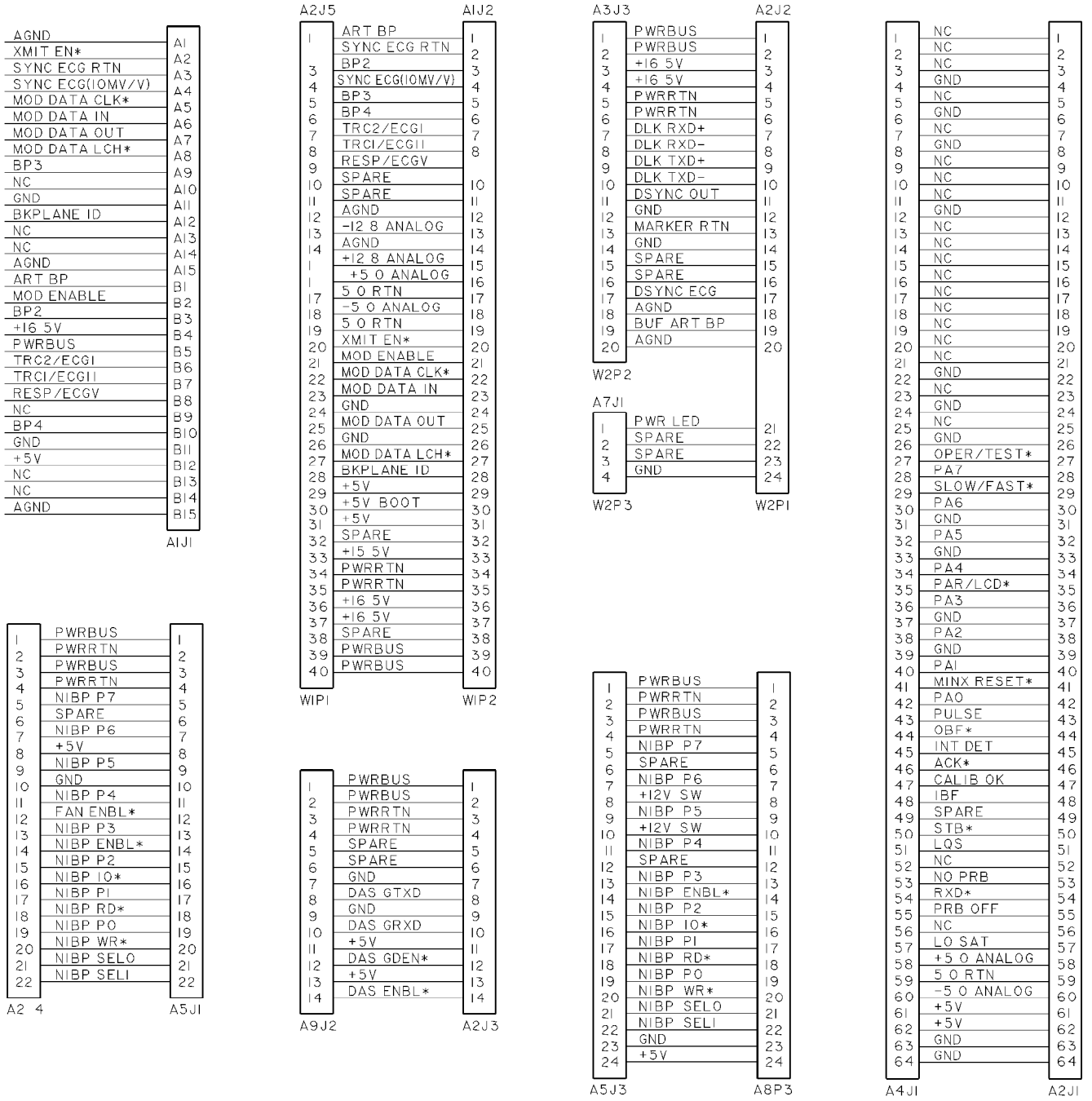
A1J1
AGND
XMIT EN*
SYNC ECG RTN
SYNC ECG(10MV/V)
MOD DATA CLK*
MOD DATA IN
MOD DATA OUT
MOD DATA LCH*
BP3
NC
GND
BKPLANE ID
NC
NC
AGND
ART BP
MOD ENABLE
BP2
+16 5V
PWRBUS
TRC2/ECG1
TRC1/ECG11
RESP/ECGV
NC
BP4
GND
+5V
NC
NC
AGND
A2J5
A1J2
ART BP
SYNC ECG RTN
BP2
SYNC ECG(10MV/V)
BP3
BP4
TRC2/ECG1
TRC1/ECG11
RESP/ECGV
SPARE
SPARE
AGND
-12 8 ANALOG
AGND
+12 8 ANALOG
+5 0 ANALOG
5 0 RTN
-5 0 ANALOG
5 0 RTN
XMIT EN*
MOD ENABLE
MOD DATA CLK*
MOD DATA IN
GND
MOD DATA OUT
GND
MOD DATA LCH*
BKPLANE ID
+5V
+5V BOOT
+5V
SPARE
+15 5V
PWRRTN
PWRRTN
+16 5V
+16 5V
SPARE
PWRBUS
PWRBUS
W1P1
W1P2
A3J3
A2J2
PWRBUS
PWRBUS
+16 5V
+16 5V
PWRRTN
PWRRTN
DLK RXD+
DLK RXD-
DLK TXD+
DLK TXD-
DSYNC OUT
GND
MARKER RTN
GND
SPARE
SPARE
DSYNC ECG
AGND
BUF ART BP
AGND
W2P2
A7J1
PWR LED
SPARE
SPARE
GND
W2P3
W2P1
NC
NC
NC
GND
NC
GND
NC
GND
NC
NC
NC
NC
NC
NC
NC
NC
NC
NC
NC
GND
NC
GND
NC
GND
OPER/TEST*
PA7
SLOW/FAST*
PA6
GND
PA5
GND
PA4
PAR/LCD*
PA3
GND
PA2
GND
PA1
MINX RESET*
PA0
PULSE
OBF*
INT DET
ACK*
CALIB OK
IBF
SPARE
STB*
LQS
NC
NO PRB
RXD*
PRB OFF
NC
LO SAT
+5 0 ANALOG
5 0 RTN
-5 0 ANALOG
+5V
+5V
GND
GND
A4J1
A2J1
PWRBUS
PWRRTN
PWRBUS
PWRRTN
NIBP P7
SPARE
NIBP P6
+5V
NIBP P5
GND
NIBP P4
FAN ENBL*
NIBP P3
NIBP ENBL*
NIBP P2
NIBP 10*
NIBP P1
NIBP RD*
NIBP P0
NIBP WR*
NIBP SELO
NIBP SEL1
A2 4
A5J1
PWRBUS
PWRBUS
PWRRTN
PWRRTN
SPARE
SPARE
GND
DAS GTXD
GND
DAS GRXD
+5V
DAS GDEN*
+5V
DAS ENBL*
A9J2
A2J3
PWRBUS
PWRRTN
PWRBUS
PWRRTN
NIBP P7
SPARE
NIBP P6
+12V SW
NIBP P5
+12V SW
NIBP P4
SPARE
NIBP P3
NIBP ENBL*
NIBP P2
NIBP 10*
NIBP P1
NIBP RD*
NIBP P0
NIBP WR*
NIBP SELO
NIBP SEL1
GND
+5V
A5J3
A8P3

Parts List PN 410496-001D

Item	Reference Designation	Parts List	Part Number	Qty
1		Cover, Module	400895-001	1
2		Frame	400982-001	1
3		Shield, Top	401679-001	1
4		Shield, Bottom	401679-002	1
5		400 Acquisition Module, 5-Lead	410495-001	1
6		Front Bezel, Lower	401105-004	1
7	A5	Fan PCB	403549-002	1
8		Trim, Rubber, Front Bezel	404620-001	1
9		Mounting Strap, Trim	404621-001	1
10	A1, W1	Power Supply PCB	401309-002	1
11		Label, Isolated Connector Function, Tram 400A, English	410540-001	1
12	A2	Module Processor PCB	800210-001	1
13		Circuit Board/Bezel Mount	404762-001	1
14		Shield, Pulse Oximetry PCB	401680-001	1
15		Plate, Chassis Ground, Bottom/Front	402317-001	1
16	A4	Pulse Oximetry PCB	401189-001	1
17		Plate, Chassis Ground, Rear	404680-002	1
19		Spring, Compression	402315-001	2
20		Screw, Power Supply PCB Mounting, SST, 4-40	402214-001	4
21		Label, Model/Serial Number	404525-006	1
22		Power Indicator PCB	403170-008	1
23		Spring, Chassis Ground, Rear	403741-001	AR
24		Screw, FLH, 100˚, Phillips, SST, 4-40 x 3/16	4505-406	6
25		Nut, Hex, 4-40	4521-304	2
26		Screw, BDGH, Phillips, 4-40 x 3/16	45074-406	19
27		Screw, BDGH, Phillips, 4-40 x 1-3/8	45074-438	2
28		Spacer, Male/Female, 4-40 x 0.875	4656-414	2
29		Screw, 4-40 x 7/8	404069-001	2
30	A3, W2	Non-Isolated Input PCB	401315-002	1
31		Carton, Shipping	404211-003	1
32		Foam Insert	404211-004	2
33		Screw, BDGH, Phillips, 4-40 x 5/8	45074-420	2
34		Screw, BDGH, Phillips, 4-40 x 3/4	45074-424	4
35	A6	Interconnect PCB	800006-001	1
36		Insulator, Bottom Shield	404188-001	2
38		Screw, BDGH, Phillips, 4-40 x 3/8	45074-412	2
39		Washer, Pulse Oximetry Connector	4550-250	1
40		Screw, FLH, Phillips, SST, 4-40 x 3/8	4505-412	2
41		Tram 100 - 850 A & SL Modules Service Manual	404422-065	–
42		Adhesive, Loctite Prism 411	4851-082	AR

Item	Reference Designation	Parts List	Part Number	Qty
43		Screw, PNHD, 4-40 x 0.188	409009-001	1
44	W3	Harness, Pulse Oximetry PCB-to-Connector	700091-004	1
45		Pin, Latch	402806-001	2
46		Spring, Flat, SST	405041-001	2
47		Button, Latch	402106-001	2
48		Latch	401682-001	2
49		Spring, Latch	406019-001	2
50		Pin, Latch	406037-001	2
51		Bracket, Power Supply PCB	406254-001	1
52	B1, W6	Pump Assembly, NBP, w/Harness	408169-002	1
53	V1, V2, W4, W5	NBP Valve Assembly	404459-001	1
54	A8	NBP PCB	800316-001	1
55		Bracket, NBP Mounting	404296-001	1
56		Check Valve, 0.125 ID	404675-001	1
57		Tubing, Silastic	401582-001	AR
58		Filter, 43 Micron	404679-001	1
59		Grommet, 1/4 Dia, 1/8 High, 1/16 Panel Thickness	404749-001	5
60		Tie Wrap	4535-002	1
61		Gasket, Silver-Nickel	407894-001	1
62		Adhesive, Conductive	4851-088	AR
65		Label, Leadwire Warning	414097-001	1
–		Label, LED, English (Determined by Destination)	410540-002	1
66		Label, Top, English (Determined by Destination)	410540-009	1
–		Label, Cover, English (Determined by Destination)	410540-016	1
–		Label, 60 Hertz (Determined by Destination)	410540-018	1
–		Label, 50 Hertz (Determined by Destination)	410540-019	1

Assembly Revisions PN 410496

The baseline revision for this assembly is pn 410496-001D. To convert the parts list back to a previous revision, change all part numbers, descriptions, and quantities as indicated in the revision tables given below.

PN 410496-001A

Item	Reference Designation	Description	Revision's Part Number	Baseline Part Number	Qty
44		Pulse Oximetry PCB Harness	700091-001	700091-004	1

PN 410496-001B

This revision was a documentation change that does not affect this manual.
Refer to pn 410496-001A for changes to the parts list.

PN 410496-001C

This revision was a documentation change that does not affect this manual.
Refer to pn 410496-001A for changes to the parts list.

Exploded View

PN 411161-001J

1 of 2

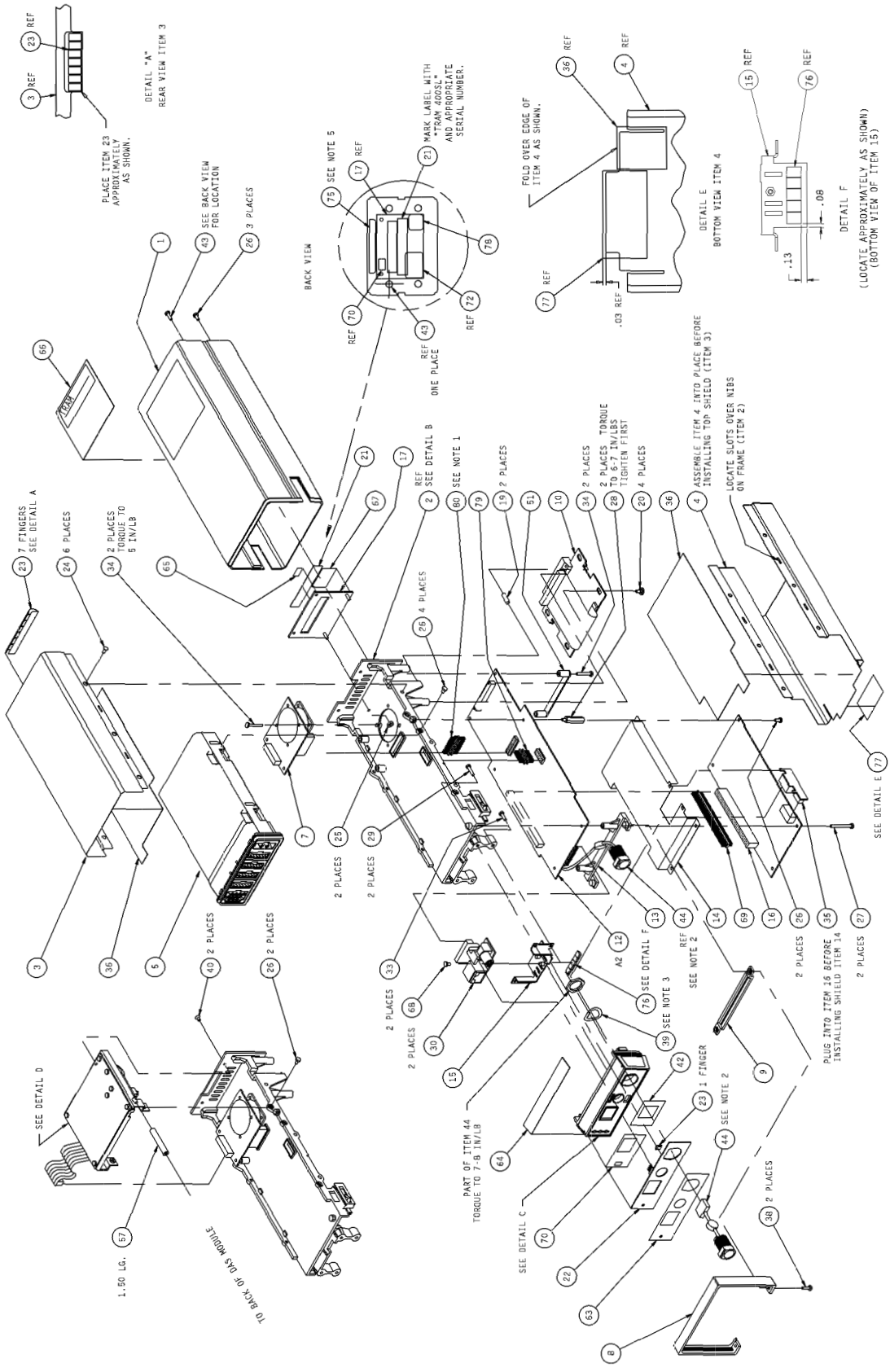

2 of 2

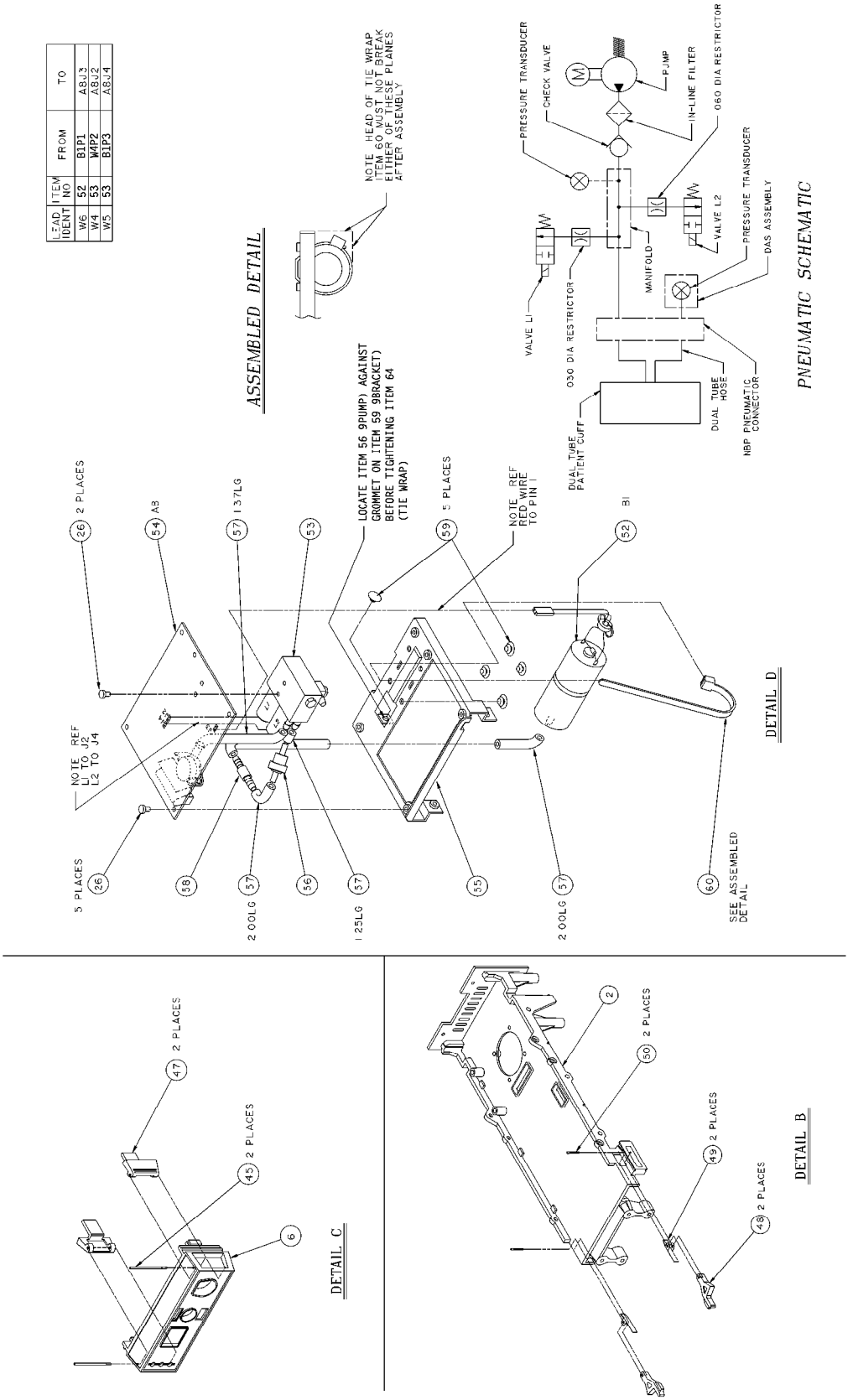
LEAD IDENT
ITEM NO
FROM
TO
W6 52 B1P1 A8.13
W4 53 W4P2 A8.12
W5 53 B1P3 A8.14
ASSEMBLED DETAIL
NOTE HEAD OF TIE WRAP ITEM 60 MUST NOT BREAK EITHER OF THESE PLANES AFTER ASSEMBLY
PNEUMATIC SCHEMATIC
PRESSURE TRANSDUCER
CHECK VALVE
PUMP
IN-LINE FILTER
.060 DIA RESTRICTOR
VALVE L2
PRESSURE TRANSDUCER
DAS ASSEMBLY
MANIFOLD
VALVE L1
.030 DIA RESTRICTOR
DUAL TUBE HOSE
NBP PNEUMATIC CONNECTOR
DUAL TUBE PATIENT CUFF
LOCATE ITEM 56 (PUMP) AGAINST GROMMET ON ITEM 59 (BRACKET) BEFORE TIGHTENING ITEM 64 (TIE WRAP)
NOTE REF RED WIRE TO PIN 1
NOTE REF L1 TO J2 L2 TO J4
DETAIL D
DETAIL C
DETAIL B
SEE ASSEMBLED DETAIL
2 PLACES
5 PLACES
A8
B1
1.37LG
2.00LG
1.25LG

Schematic Diagram PN 411161-001J

1 of 2

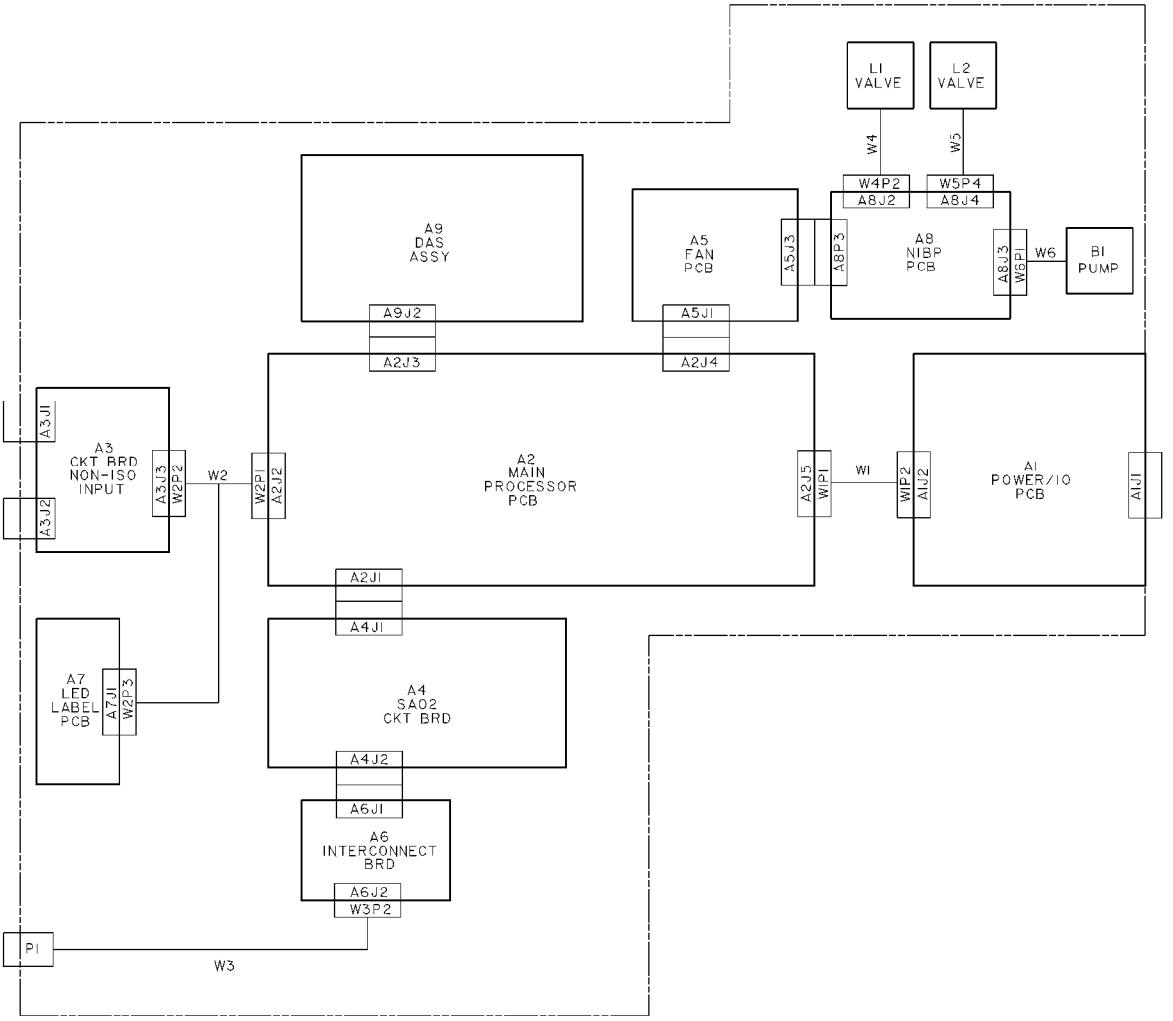

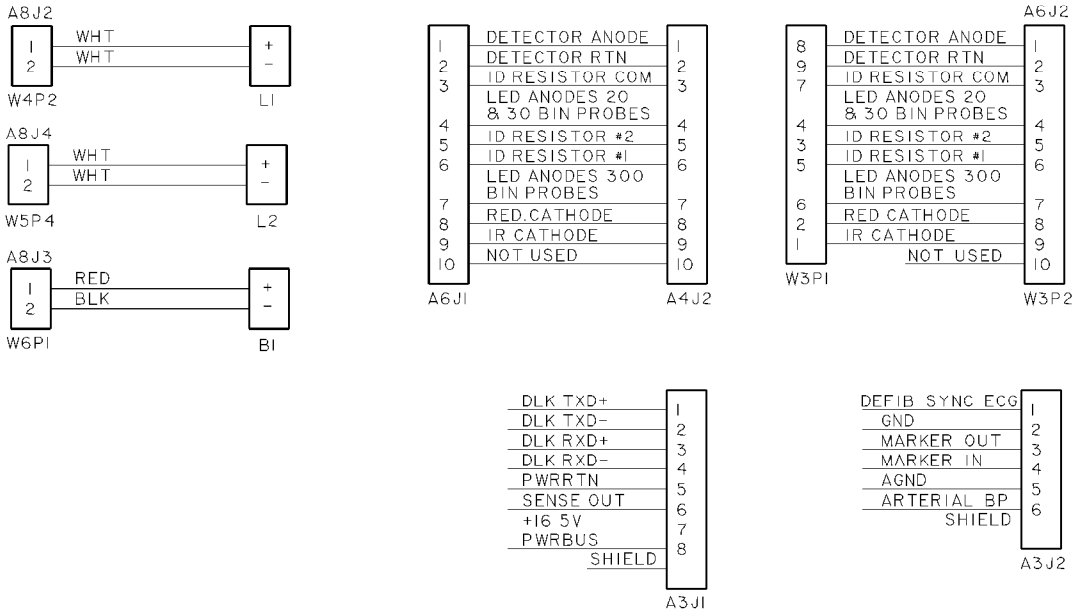

2 of 2

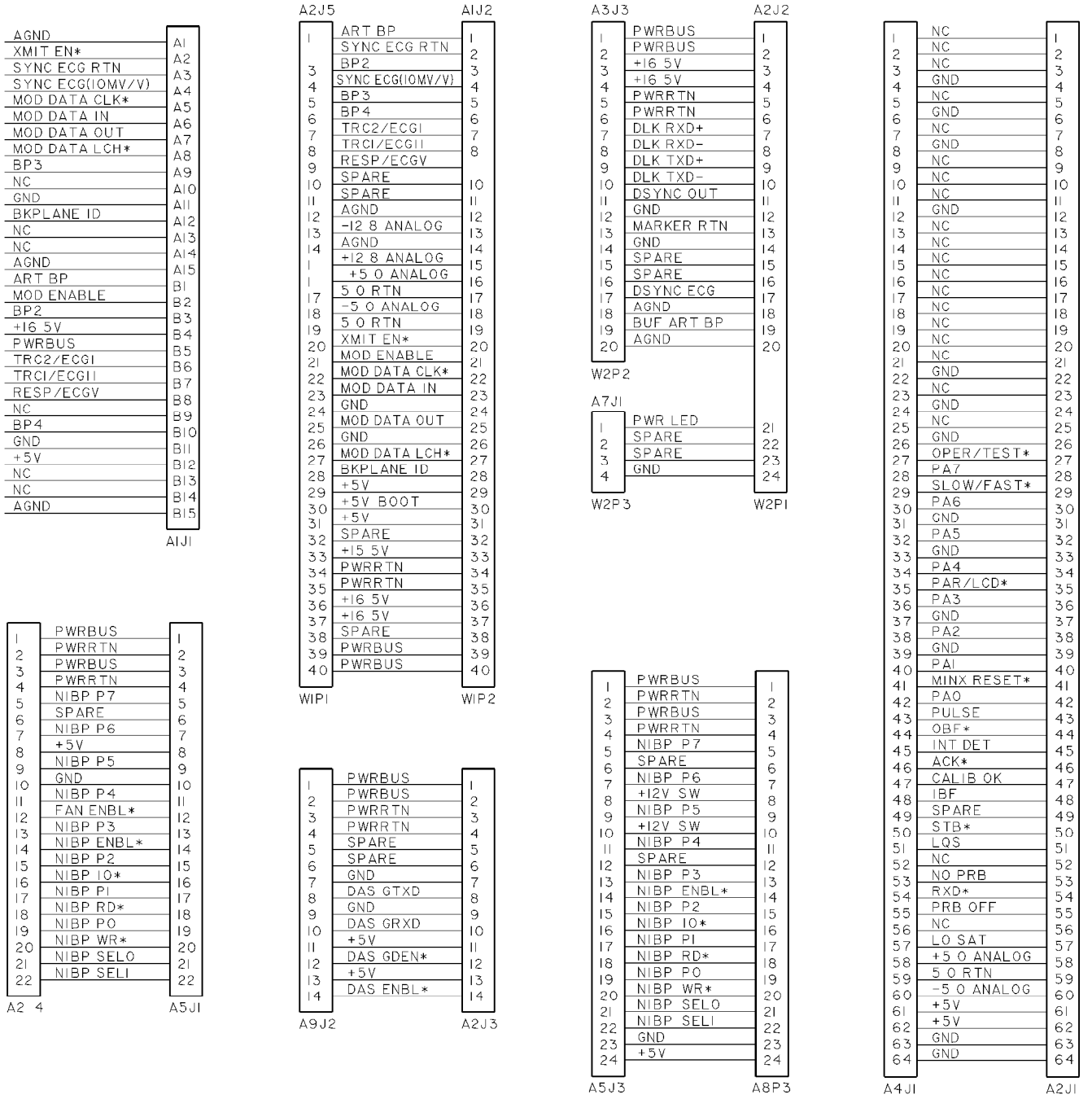
A1J1
AGND
XMIT EN*
SYNC ECG RTN
SYNC ECG(10MV/V)
MOD DATA CLK*
MOD DATA IN
MOD DATA OUT
MOD DATA LCH*
BP3
NC
GND
BKPLANE ID
NC
NC
AGND
ART BP
MOD ENABLE
BP2
+16 5V
PWRBUS
TRC2/ECGI
TRCI/ECGII
RESP/ECGV
NC
BP4
GND
+5V
NC
NC
AGND
A2J5
WIP1
ART BP
SYNC ECG RTN
BP2
SYNC ECG(10MV/V)
BP3
BP4
TRC2/ECGI
TRCI/ECGII
RESP/ECGV
SPARE
SPARE
AGND
-12 8 ANALOG
AGND
+12 8 ANALOG
+5 0 ANALOG
5 0 RTN
-5 0 ANALOG
5 0 RTN
XMIT EN*
MOD ENABLE
MOD DATA CLK*
MOD DATA IN
GND
MOD DATA OUT
GND
MOD DATA LCH*
BKPLANE ID
+5V
+5V BOOT
+5V
SPARE
+15 5V
PWRRTN
PWRRTN
+16 5V
+16 5V
SPARE
PWRBUS
PWRBUS
A1J2
WIP2
A3J3
W2P2
PWRBUS
PWRBUS
+16 5V
+16 5V
PWRRTN
PWRRTN
DLK RXD+
DLK RXD-
DLK TXD+
DLK TXD-
DSYNC OUT
GND
MARKER RTN
GND
SPARE
SPARE
DSYNC ECG
AGND
BUF ART BP
AGND
A7J1
W2P3
PWR LED
SPARE
SPARE
GND
A2J2
W2P1
A2 4
A5J1
PWRBUS
PWRRTN
PWRBUS
PWRRTN
NIBP P7
SPARE
NIBP P6
+5V
NIBP P5
GND
NIBP P4
FAN ENBL*
NIBP P3
NIBP ENBL*
NIBP P2
NIBP 10*
NIBP P1
NIBP RD*
NIBP P0
NIBP WR*
NIBP SELO
NIBP SELI
A9J2
PWRBUS
PWRBUS
PWRRTN
PWRRTN
SPARE
SPARE
GND
DAS GTXD
GND
DAS GRXD
+5V
DAS GDEN*
+5V
DAS ENBL*
A2J3
A5J3
PWRBUS
PWRRTN
PWRBUS
PWRRTN
NIBP P7
SPARE
NIBP P6
+12V SW
NIBP P5
+12V SW
NIBP P4
SPARE
NIBP P3
NIBP ENBL*
NIBP P2
NIBP 10*
NIBP P1
NIBP RD*
NIBP P0
NIBP WR*
NIBP SELO
NIBP SELI
GND
+5V
A8P3
A4J1
NC
NC
NC
GND
NC
GND
NC
GND
NC
NC
GND
NC
NC
NC
NC
NC
NC
NC
NC
GND
NC
GND
NC
GND
OPER/TEST*
PA7
SLOW/FAST*
PA6
GND
PA5
GND
PA4
PAR/LCD*
PA3
GND
PA2
GND
PA1
MINX RESET*
PA0
PULSE
OBF*
INT DET
ACK*
CALIB OK
IBF
SPARE
STB*
LQS
NC
NO PRB
RXD*
PRB OFF
NC
LO SAT
+5 0 ANALOG
5 0 RTN
-5 0 ANALOG
+5V
+5V
GND
GND
A2J1

Parts List PN 411161-001J

Item	Reference Designation	Parts List	Part Number	Qty
1		Cover, Module	400895-001	1
2		Frame	400982-001	1
3		Shield, Top	401679-001	1
4		Shield, Bottom	401679-002	1
5	A9	400 Acquisition Module, 10-Lead	417121-001	1
6		Front Bezel, Lower	401105-004	1
7	A5	Fan PCB	403549-002	1
8		Trim, Rubber, Front Bezel	404620-001	1
9		Mounting Strap, Trim	404621-001	1
10	A1, W1	Power Supply PCB	401309-002	1
12	A2	Module Processor PCB	800210-005	1
13		Circuit Board/Bezel Mount	404762-001	1
14		Shield, Pulse Oximetry PCB	401680-001	1
15		Plate, Chassis Ground, Bottom/Front	402317-001	1
16	A4	Pulse Oximetry PCB	401189-001	1
17		Plate, Chassis Ground, Rear	404680-002	1
19		Spring, Compression	402315-001	2
20		Screw, Power Supply PCB Mounting, SST, 4-40	402214-001	4
21		Label, Model/Serial Number	404525-006	1
22		Power Indicator	403170-008	1
23		Spring, Chassis Ground, Rear	403741-001	AR
24		Screw, FLH, 100°, Phillips, SST, 4-40 x 3/16	4505-406	6
25		Nut, Hex, 4-40	4521-304	2
26		Screw, BDGH, Phillips, 4-40 x 3/16	45074-406	17
27		Screw, BDGH, Phillips, 4-40 x 1-3/8	45074-438	2
28		Spacer, Male/Female, 4-40 x 0.875	4656-414	2
29		Screw, 4-40 x 7/8	404069-001	2
30	A3	Non-Isolated Input PCB	401315-002	1
31		Carton, Shipping	404211-003	1
32		Foam Insert	404211-004	2
33		Screw, BDGH, Phillips, 4-40 x 5/8	45074-420	2
34		Screw, BDGH, Phillips, 4-40 x 3/4	45074-424	4
35	A6	Interconnect PCB	800006-001	1
36		Insulator, Bottom Shield	404188-001	2
38		Screw, BDGH, Phillips, 4-40 x 3/8	45074-412	2
39		Washer, Pulse Oximetry Connector	4550-250	1
40		Screw, FLH, Phillips, SST, 4-40 x 3/8	4505-412	2
41		Tram 100 - 850 A & SL Modules Service Manual	404422-065	–
42		Adhesive, Diecut, Front Right	415098-001	1
43		Screw, PHD, 4-40 x 0.188, Modified (Determined by Destination)	409009-001	1

Item	Reference Designation	Parts List	Part Number	Qty
43		Screw, PHD, 4-40 x 0.188 (Determined by Destination)	45074-406	1
44	W3	Harness Assembly, SpO2 - w/Choke	700091-004	1
45		Pin, Latch	402806-001	2
47		Button, Latch	402106-001	2
48		Latch	401682-001	2
49		Spring, Latch	406019-001	2
50		Pin, Latch	406037-001	2
51		Bracket, Power Supply PCB	406254-001	1
52	B1, W6	Pump Assembly, NBP, w/Harness	408169-002	1
53	V1, V2, W4, W5	NBP Valve Assembly	416153-001	1
54	A8	NBP PCB	800316-002	1
55		Bracket, NBP Mounting	404296-001	1
56		Check Valve, 0.125 ID	404675-001	1
57		Tubing, Silastic	401582-001	AR
58		Filter, 43 Micron	404679-001	1
59		Grommet, 1/4 Dia, 1/8 High, 1/16 Panel Thickness	404749-001	5
60		Tie Wrap	4535-002	1
63		Label, Front, English (Determined by Destination)	411174-002	1
63		Label, Front, German (Determined by Destination)	411174-003	1
63		Label, Front, French (Determined by Destination)	411174-004	1
63		Label, Front, Swedish (Determined by Destination)	411174-005	1
63		Label, Front, Spanish (Determined by Destination)	411174-006	1
63		Label, Front, Italian (Determined by Destination)	411174-007	1
63		Label, Front, Dutch (Determined by Destination)	411174-008	1
64		Label, Top, English (Determined by Destination)	411174-009	1
64		Label, Top, German (Determined by Destination)	411174-010	1
64		Label, Top, French (Determined by Destination)	411174-011	1
64		Label, Top, Swedish (Determined by Destination)	411174-012	1
64		Label, Top, Spanish (Determined by Destination)	411174-013	1
64		Label, Top, Italian (Determined by Destination)	411174-014	1
64		Label, Top, Dutch (Determined by Destination)	411174-015	1
65		Label, 60 Hertz (Determined by Destination)	411091-018	1
65		Label, 50 Hertz (Determined by Destination)	411031-019	1
66		Label, Cover, English (Determined by Destination)	411174-016	1
66		Label, Cover, German (Determined by Destination)	411174-020	1
66		Label, Cover, French (Determined by Destination)	411174-021	1
66		Label, Cover, Swedish (Determined by Destination)	411174-022	1
66		Label, Cover, Spanish (Determined by Destination)	411174-023	1
66		Label, Cover, French (Determined by Destination)	4111734-024	1
66		Label, Cover, International (Determined by Destination)	411174-025	1
67		Label, TUV	408103-002	1

Item	Reference Designation	Parts List	Part Number	Qty
67		Label, UL Listed	408230-002	1
68		Screw, PNH, Phillips, SST, 4-40 x 3/16	4502-406	2
69	P1	Connector, Header, 64-Pin, w/Ferrites	409203-001	1
70		Adhesive, Diecut, Front Left	415098-002	1
76		Spring, Chassis Ground, Small	414610-001	AR
77		Adhesive, Mylar	415316-001	1
78		Label, CE Mark	408230-008	1
79		PC Post, 2 x 7	412062-004	1
80		PC Post, 2 x 11	412062-005	1

Assembly Revisions PN 411161

The baseline revision for this assembly is pn 411161-001J. To convert the parts list back to a previous revision, change all part numbers, descriptions, and quantities as indicated in the revision tables given below.

PN 411161-001A					
Item	**Reference Designation**	**Description**	**Revision's Part Number**	**Baseline Part Number**	**Qty**
5	A9	DAS 400 Module, 10-Lead	411167-001	417121-001	1
11		Label Set, Tram 400SL	411174-001	Not Used	1
12		Module Processor PCB	800210-002	800210-005	1
42		Adhesive, Loctite Prism 411	4851-082	415098-001	AR
46		Bezel Kit, Front	407721-004	Not Used	1
53	V1, V2, W4, W5	NBP Valve Assembly	413021-001	416153-001	1
54	A8	NBP PCB	800316-001	800316-002	1
57		NBP Tram Valve Assembly	404459-001	413021-001	1
68		Screw, Phillips, STT, 4-40 x 3/16	Not Used	4502-406	2
69		Connector, Header 64-pin w/Ferrites	Not Used	409203-001	1
70		Adhesive, Diecut Front Left	Not Used	415098-002	1
76		Spring, Chassis Ground, Small	Not Used	414610-001	AR
77		Adhesive, Mylar	Not Used	415316-001	1
78		Label, CE Mark	Not Used	408230-008	1
79		PC Post, 2 x 7	Not Used	412062-004	1
80		PC Post, 2 x 11	Not Used	412062-005	1

PN 411161-001B

Item	Reference Designation	Description	Revision's Part Number	Baseline Part Number	Qty
5	A9	DAS 400 Module, 10-Lead	411167-001	417121-001	1
11		Label Set, Tram 400SL	411174-001	Not Used	1
12		Module Processor PCB	800210-002	800210-005	1
42		Adhesive, Loctite Prism 411	4851-082	415098-001	AR
46		Bezel Kit, Front	407721-004	Not Used	1
53	V1, V2, W4, W5	NBP Valve Assembly	413021-001	416153-001	1
54	A8	NBP PCB	800316-001	800316-002	1
68		Screw, Phillips, STT, 4-40 x 3/16	Not Used	4502-406	2
69		Connector, Header 64-pin w/Ferrites	Not Used	409203-001	1
70		Adhesive, Diecut Front Left	Not Used	415098-002	1
76		Spring, Chassis Ground, Small	Not Used	414610-001	AR
77		Adhesive, Mylar	Not Used	415316-001	1
78		Label, CE Mark	Not Used	408230-008	1
79		PC Post, 2 x 7	Not Used	412062-004	1
80		PC Post, 2 x 11	Not Used	412062-005	1

PN 411161-001C

Item	Reference Designation	Description	Revision's Part Number	Baseline Part Number	Qty
5	A9	DAS 400 Module, 10-Lead	411167-001	417121-001	1
12		Module Processor PCB	800210-002	800210-005	1
42		Adhesive, Loctite Prism 411	4851-082	415098-001	AR
53	V1, V2, W4, W5	NBP Valve Assembly	413021-001	416153-001	1
54	A8	NBP PCB	800316-001	800316-002	1
70		Adhesive, Diecut Front Left	Not Used	415098-002	1
76		Spring, Chassis Ground, Small	Not Used	414610-001	AR
77		Adhesive, Mylar	Not Used	415316-001	1
78		Label, CE Mark	Not Used	408230-008	1
79		PC Post, 2 x 7	Not Used	412062-004	1
80		PC Post, 2 x 11	Not Used	412062-005	1

PN 411161-001D

This revision was a documentation change that does not affect this manual.
Refer to pn 411161-001C for changes to the parts list.

PN 411161-001E

Item	Reference Designation	Description	Revision's Part Number	Baseline Part Number	Qty
5	A9	DAS 400 Module, 10-Lead	411167-001	417121-001	1
12		Module Processor PCB	800210-002	800210-005	1
53	V1, V2, W4, W5	NBP Valve Assembly	413021-001	416153-001	1
54	A8	NBP PCB	800316-001	800316-002	1
76		Spring, Chassis Ground, Small	Not Used	414610-001	AR
77		Adhesive, Mylar	Not Used	415316-001	1
78		Label, CE Mark	Not Used	408230-008	1
79		PC Post, 2 x 7	Not Used	412062-004	1
80		PC Post, 2 x 11	Not Used	412062-005	1

PN 411161-001F

This revision was a documentation change that does not affect this manual.
Refer to pn 411161-001E for changes to the parts list.

PN 411161-001G

Item	Reference Designation	Description	Revision's Part Number	Baseline Part Number	Qty
5	A9	DAS 400 Module, 10-Lead	411167-001	417121-001	1
53	V1, V2, W4, W5	NBP Valve Assembly	413021-001	416153-001	1
54	A8	NBP PCB	800316-001	800316-002	1

PN 411161-001H

Item	Reference Designation	Description	Revision's Part Number	Baseline Part Number	Qty
5	A9	DAS 400 Module, 10-Lead	411167-001	417121-001	1
54	A8	NBP PCB	800316-001	800316-002	1

For your notes

11 TRAM 450SL MODULE PN 412654

General **11-2**
Circuit Boards 11-2

Exploded View PN 412654-001H **11-3**

Schematic Diagram PN 412654-001H **11-5**

Parts List PN 412654-001H **11-7**

Assembly Revisions PN 412654 ..... **11-10**

General

Circuit Boards

Details about the circuit boards contained in the Tram 450SL are discussed in later chapters arranged by part number.

Table 8-1. Circuit Board Overview

Module Type	Upper Level	Leadwire Configuration	DAS Module	Acquisition Processor PCB	Module Processor PCB
Tram 450SL	412654-001A-G	10-Leadwire	411167-001	800330-010	800210-005
Tram 450SL	412654-001H	10-Leadwire	417121-001 (Replaces 411167-001)	801040-001	800210-005

Exploded View

PN 412654-001H

1 of 2

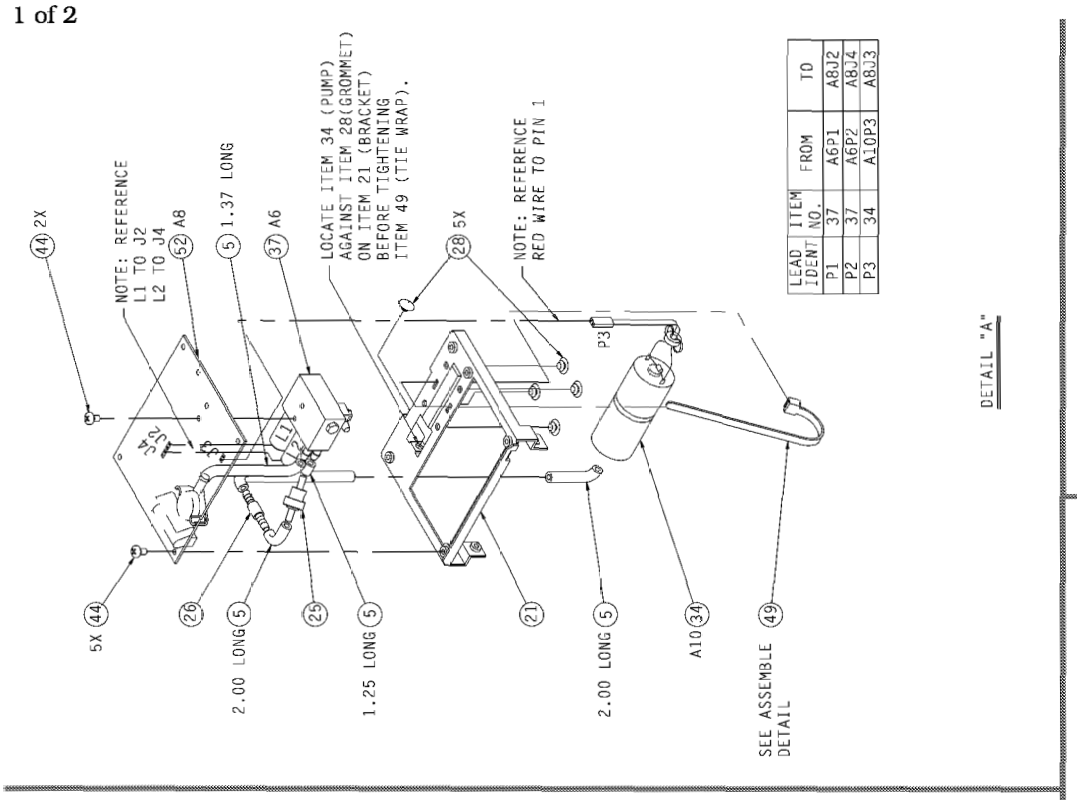

LEAD IDENT	ITEM NO.	FROM	TO
P1	37	A6P1	A8J2
P2	37	A6P2	A8J4
P3	34	A10P3	A8J3

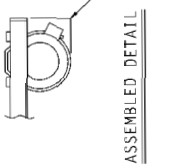

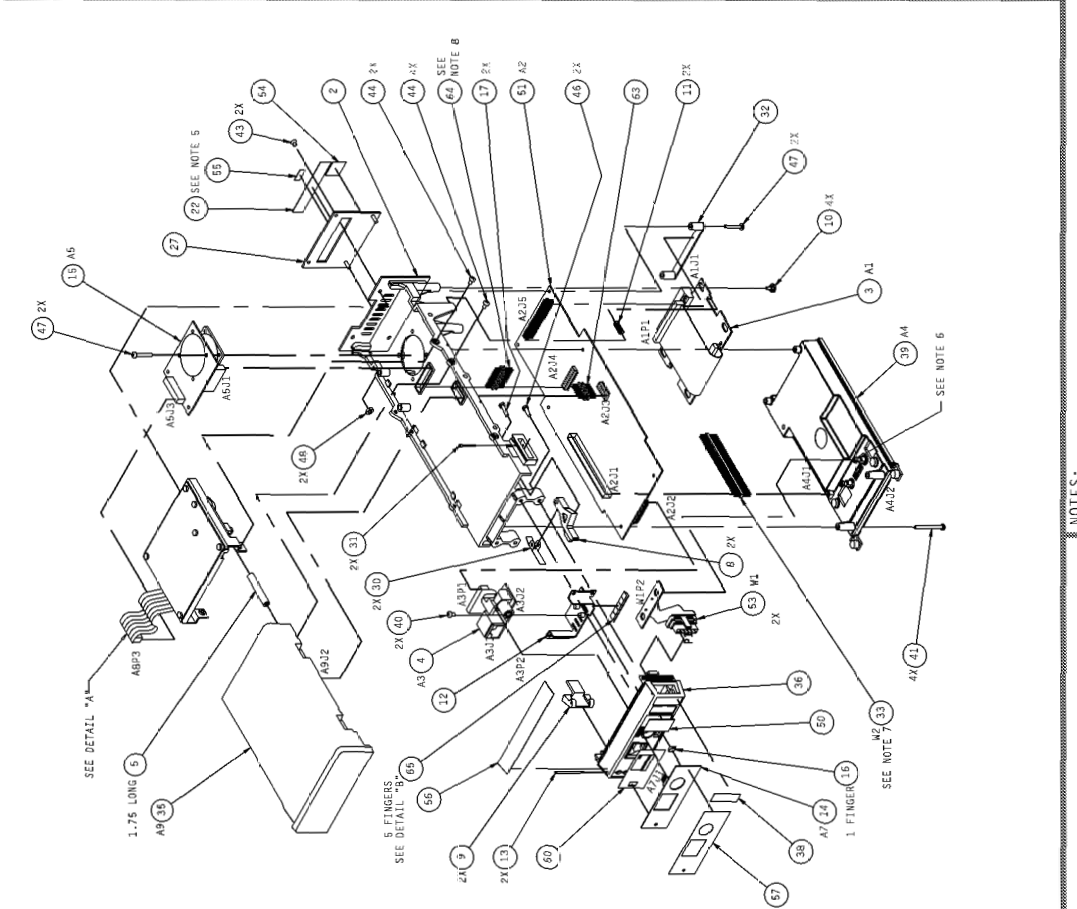

NOTES:

1. WHEN SHIELD (ITEM 7) IS INSTALLED, THE TAB SHOULD TUCK INTO THE FRONT BEZEL (ITEM 36) AND BE IN CONTACT WITH THE SHIELDING FINGERS (ITEM 16) ON THE BOTTOM OF THE BRACKET (ITEM 12).
2. SWITCH SETTINGS MUST BE MADE FOR EACH CONFIGURATION (SEE SWITCH CHART SHEET 2).
3. CHECK APPROPRIATE BOX ON SIDE OF CARTON TO INDICATE UNIT BEING SHIPPED.
4. LOOSE ITEMS MAY BE SHIPPED WITH THE UNIT IF SPACE PERMITS OR PACKAGED AND SHIPPED SEPARATELY.
5. MARK LABEL WITH MODEL NUMBER, SERIAL NUMBER, AND BAR CODE.
6. INSERT TWO HOLES OF FLEX PCB (ITEM 53) ONTO 1/4-TURN STANDOFF (ITEM 39) UNTIL CONNECTOR ON PCB FLEX BOTTOMS OUT. THEN LOCK THE STANDOFFS BY TURNING THE HEX SCREW OF THE STANDOFF 1/4-TURN CLOCKWISE.
7. INSERT THE SHORT LEADS OF CONNECTOR (ITEM 33) INTO PCB TRAM CPU (ITEM 51).
8. INSERT LONGER PIN SIDE INTO ITEM 51. PINS MUST EXTEND BEYOND MATING CONNECTOR ON ITEM 51 WHEN ASSEMBLED.

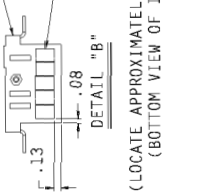

2 of 2

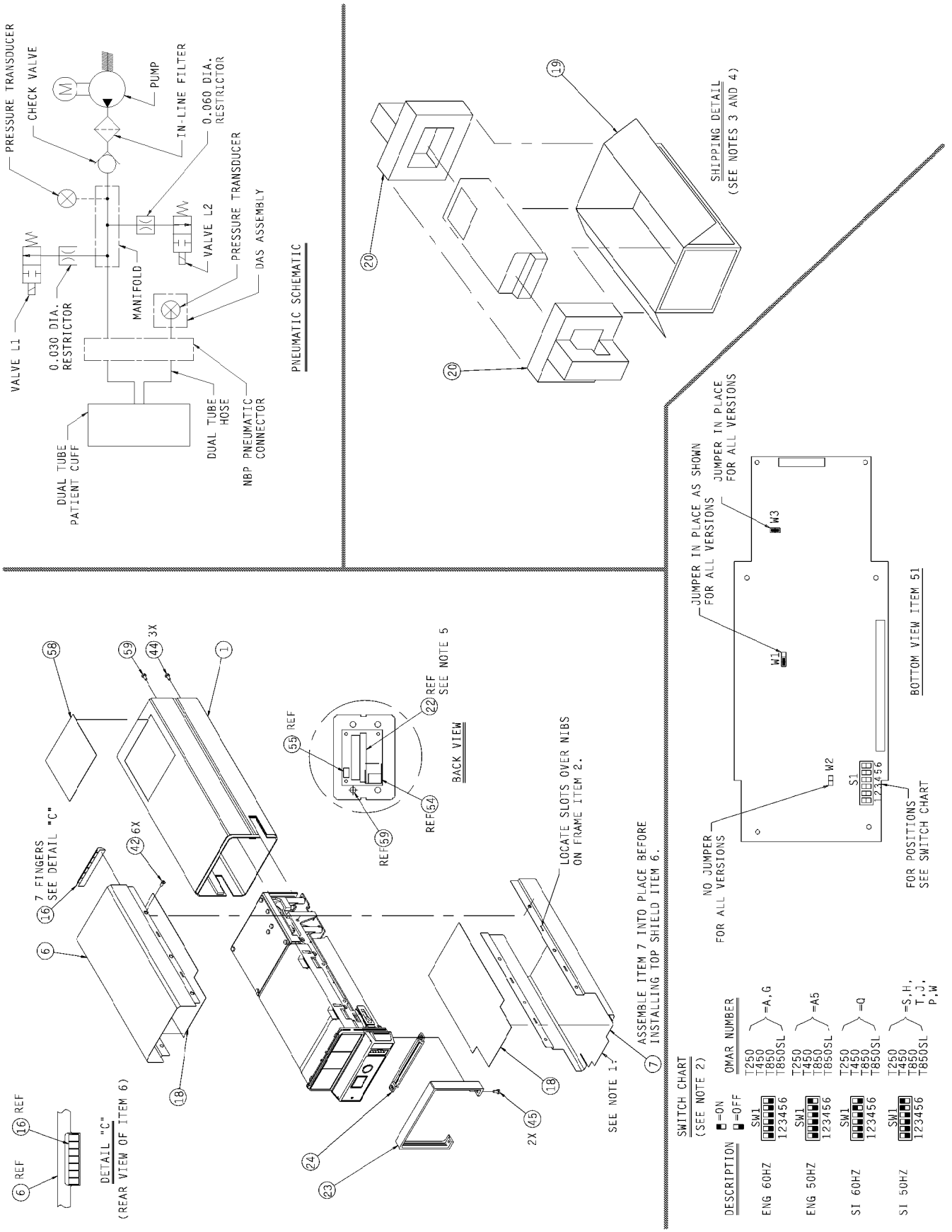
PRESSURE TRANSDUCER
CHECK VALVE
PUMP
IN-LINE FILTER
0.060 DIA. RESTRICTOR
PRESSURE TRANSDUCER
VALVE L2
DAS ASSEMBLY
MANIFOLD
VALVE L1
0.030 DIA. RESTRICTOR
DUAL TUBE HOSE
NBP PNEUMATIC CONNECTOR
DUAL TUBE PATIENT CUFF
PNEUMATIC SCHEMATIC
SHIPPING DETAIL (SEE NOTES 3 AND 4)
JUMPER IN PLACE AS SHOWN FOR ALL VERSIONS
JUMPER IN PLACE FOR ALL VERSIONS
W3
W1
W2
S1
123456
BOTTOM VIEW ITEM 51
NO JUMPER FOR ALL VERSIONS
FOR POSITIONS SEE SWITCH CHART
7 FINGERS SEE DETAIL "C"
REF SEE NOTE 5
BACK VIEW
REF
REF
LOCATE SLOTS OVER NIBS ON FRAME ITEM 2.
ASSEMBLE ITEM 7 INTO PLACE BEFORE INSTALLING TOP SHIELD ITEM 6.
SEE NOTE 1
2X
DETAIL "C" (REAR VIEW OF ITEM 6)
REF
REF
SWITCH CHART (SEE NOTE 2)
=ON
=OFF
DESCRIPTION
QMAR NUMBER
ENG 60HZ
ENG 50HZ
SI 60HZ
SI 50HZ
SW1
123456
T250
T450
T850
T850SL
=A,G
=A5
=Q
=S,H,T,J,P,W

Schematic Diagram PN 412654-001H

1 of 2

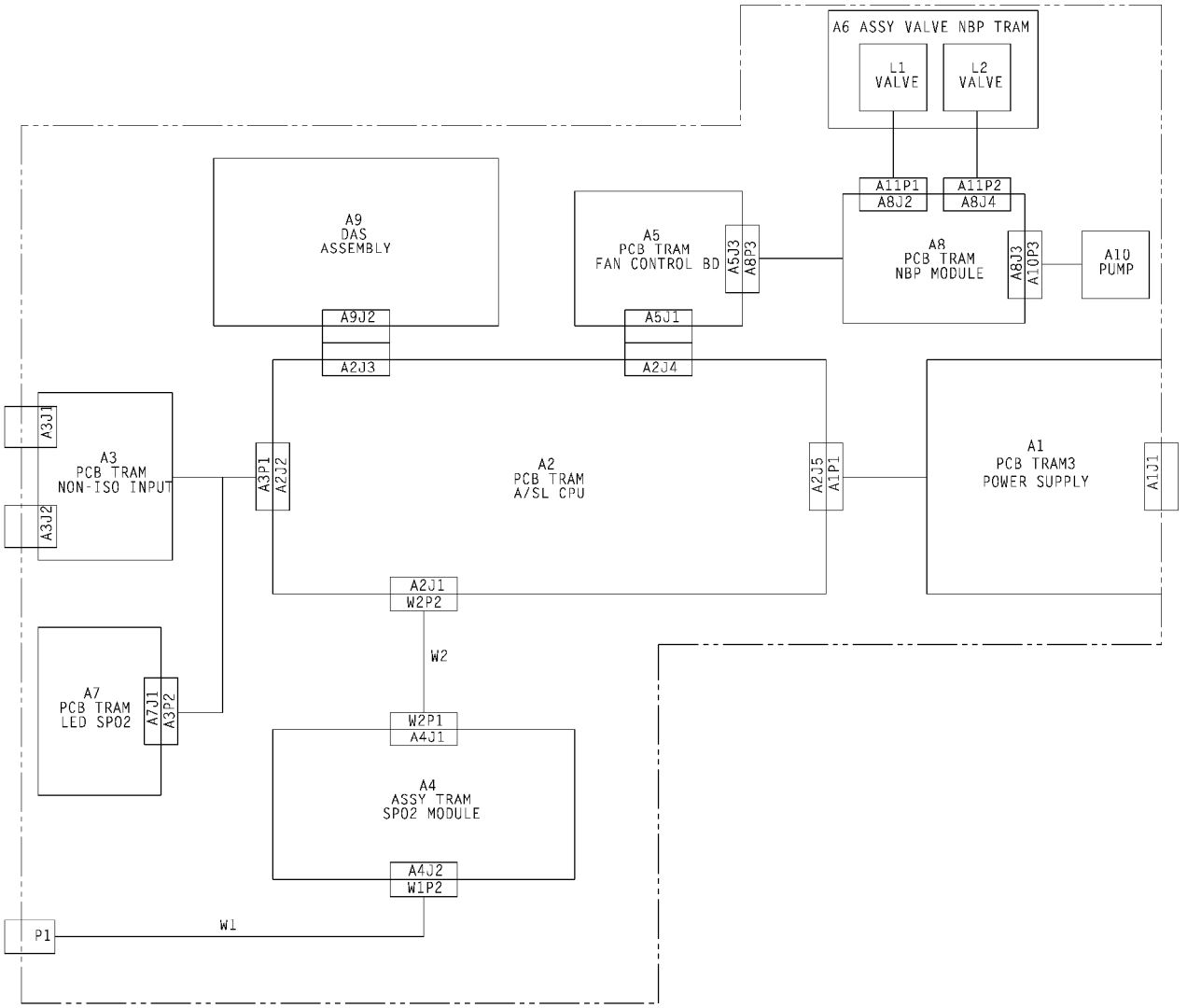

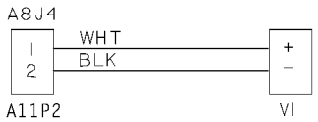

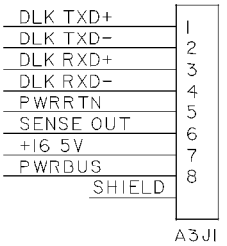

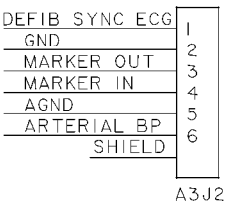

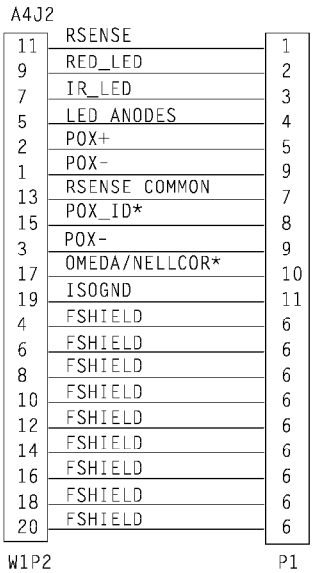

2 of 2

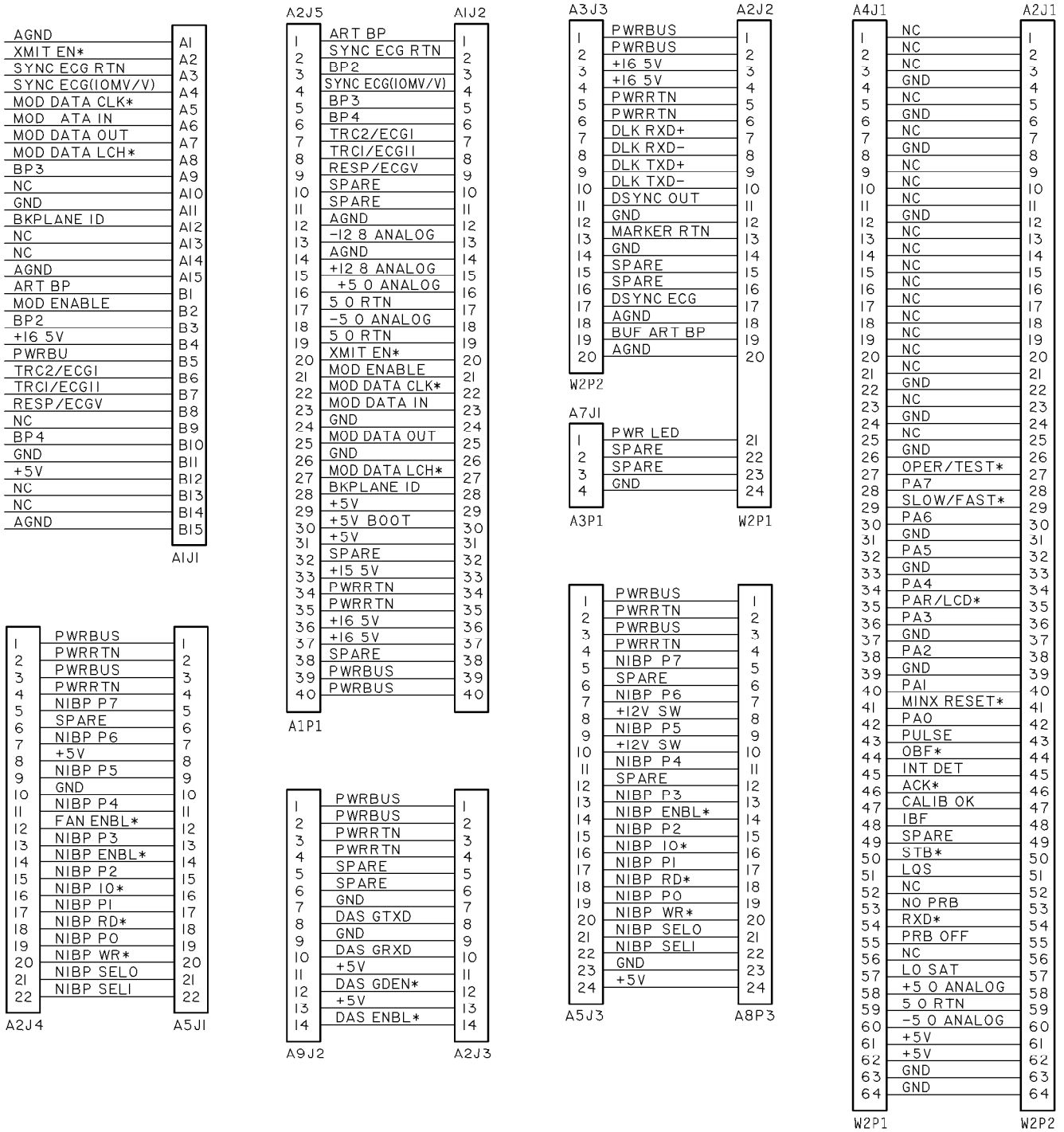
A1J1
AGND
XMIT EN*
SYNC ECG RTN
SYNC ECG(10MV/V)
MOD DATA CLK*
MOD DATA IN
MOD DATA OUT
MOD DATA LCH*
BP3
NC
GND
BKPLANE ID
NC
NC
AGND
ART BP
MOD ENABLE
BP2
+16 5V
PWRBU
TRC2/ECGI
TRCI/ECGII
RESP/ECGV
NC
BP4
GND
+5V
NC
NC
AGND
A2J5
A1P1
ART BP
SYNC ECG RTN
BP2
SYNC ECG(10MV/V)
BP3
BP4
TRC2/ECGI
TRCI/ECGII
RESP/ECGV
SPARE
SPARE
AGND
-12 8 ANALOG
AGND
+12 8 ANALOG
+5 0 ANALOG
5 0 RTN
-5 0 ANALOG
5 0 RTN
XMIT EN*
MOD ENABLE
MOD DATA CLK*
MOD DATA IN
GND
MOD DATA OUT
GND
MOD DATA LCH*
BKPLANE ID
+5V
+5V BOOT
+5V
SPARE
+15 5V
PWRRTN
PWRRTN
+16 5V
+16 5V
SPARE
PWRBUS
PWRBUS
A1J2
A3J3
W2P2
PWRBUS
PWRBUS
+16 5V
+16 5V
PWRRTN
PWRRTN
DLK RXD+
DLK RXD-
DLK TXD+
DLK TXD-
DSYNC OUT
GND
MARKER RTN
GND
SPARE
SPARE
DSYNC ECG
AGND
BUF ART BP
AGND
A2J2
A7J1
A3P1
PWR LED
SPARE
SPARE
GND
W2P1
A2J4
A5J1
PWRBUS
PWRRTN
PWRBUS
PWRRTN
NIBP P7
SPARE
NIBP P6
+5V
NIBP P5
GND
NIBP P4
FAN ENBL*
NIBP P3
NIBP ENBL*
NIBP P2
NIBP 10*
NIBP PI
NIBP RD*
NIBP PO
NIBP WR*
NIBP SELO
NIBP SELI
A9J2
A2J3
PWRBUS
PWRBUS
PWRRTN
PWRRTN
SPARE
SPARE
GND
DAS GTXD
GND
DAS GRXD
+5V
DAS GDEN*
+5V
DAS ENBL*
A5J3
A8P3
PWRBUS
PWRRTN
PWRBUS
PWRRTN
NIBP P7
SPARE
NIBP P6
+12V SW
NIBP P5
+12V SW
NIBP P4
SPARE
NIBP P3
NIBP ENBL*
NIBP P2
NIBP 10*
NIBP PI
NIBP RD*
NIBP PO
NIBP WR*
NIBP SELO
NIBP SELI
GND
+5V
A4J1
W2P1
A2J1
W2P2
NC
NC
NC
GND
NC
GND
NC
GND
NC
NC
NC
GND
NC
NC
NC
NC
NC
NC
NC
NC
GND
NC
GND
NC
GND
OPER/TEST*
PA7
SLOW/FAST*
PA6
GND
PA5
GND
PA4
PAR/LCD*
PA3
GND
PA2
GND
PAI
MINX RESET*
PAO
PULSE
OBF*
INT DET
ACK*
CALIB OK
IBF
SPARE
STB*
LQS
NC
NO PRB
RXD*
PRB OFF
NC
LO SAT
+5 0 ANALOG
5 0 RTN
-5 0 ANALOG
+5V
+5V
GND
GND

Parts List PN 412654-001H

Item	Reference Designation	Parts List	Part Number	Qty
1		Cover, Module	400895-001	1
2		Frame	400982-001	1
3	A1	Power Supply PCB	401309-002	1
4	A3	Non-Isolated Input PCB	401315-002	1
5		Tubing, Silastic	401582-001	AR
6		Shield, Top	401679-001	1
7		Shield, Bottom	401679-002	1
8		Latch	401682-001	2
9		Button, Latch	402106-001	2
10		Screw, Shoulder	402214-001	4
11		Spring, Compression	402315-001	2
12		Plate, Chassis Ground, Bottom/Front	402317-001	1
13		Pin, Latch	402806-001	2
14	A7	Power Indicator PCB	403170-011	1
15	A5	Fan PCB	403549-002	1
16		Spring, Chassis Ground, Rear	403741-001	AR
17		Screw, BDGH, Phillips, 4-40 x 7/8	404069-001	2
18		Insulator, Bottom Shield	404188-001	2
19		Carton, Shipping	404211-003	1
20		Foam, Insert	404211-004	1
21		Bracket, NBP Mounting	404296-001	1
22		Label, Blank	404525-006	1
23		Trim, Rubber, Front Bezel	404620-001	1
24		Mounting Strap, Trim	404621-001	1
25		Check Valve, 0.125 ID	404675-001	1
26		Filter, 43 Micron	404679-001	1
27		Plate, Chassis Ground, Rear	404680-002	1
28		Grommet, 1/4 Dia, 1/8 High, 1/16 Panel Thickness	404749-001	5
30		Spring, Latch	406019-001	2
31		Pin, Latch	406037-001	2
32		Bracket, Power Supply PCB	406254-001	1
33	W2	Connector, Header, Dual, 64-Pin	407452-002	1
34	A10	Pump Assembly, NBP, w/Harness	408169-002	1
35	A9	400 Acquisition Module, 10-Lead	417121-001	1
36		Front Bezel, Tram	412659-001	1
37	A6	NBP Valve Assembly	416153-002	1
38		Label, Pulse Oximetry, Nellcor	413831-002	1
39	A4	Pulse Oximetry Assembly (Including Pulse Oximetry PCB, PN 800674-00X)	414409-001	1
40		Screw, BDGH, Phillips, 4-40 x 3/16	4502-406	2
41		Screw, BDGH, Phillips, 4-40 x 1-1/4	4502-440	4

Item	Reference Designation	Parts List	Part Number	Qty
42		Screw, FLH, 100˚, Phillips, SST, 4-40 x 3/16	4505-406	6
43		Screw, FLH, Phillips, SST, 4-40 x 3/8	4505-412	2
44		Screw, BDGH, Phillips, 4-40 x 3/16	45074-406	16
45		Screw, BDGH, Phillips, 4-40 x 3/8	45074-412	2
46		Screw, BDGH, Phillips, 4-40 x 5/8	45074-420	2
47		Screw, BDGH, Phillips, 4-40 x 3/4	45074-424	4
48		Nut, Hex, 4-40	4521-304	2
49		Tie Wrap	4535-002	1
50		Adhesive, Diecut, Front Right	415098-003	1
51	A2	Module Processor PCB	800210-005	1
52	A8	NPB PCB	800316-002	1
53	W1	Harness, Pulse Oximetry PCB-to-Connector	800892-001	1
54		Label, UL (Determined by Destination)	408230-002	1
55		Label, 60 Hertz	411091-018	1
55		Label, 50 Hertz	411091-019	1
56		Label, Top, English (Determined by Destination)	411174-009	1
56		Label, Top, German (Determined by Destination)	411174-010	1
56		Label, Top, French (Determined by Destination)	411174-011	1
56		Label, Top, Swedish (Determined by Destination)	411174-012	1
56		Label, Top, Spanish (Determined by Destination)	411174-013	1
56		Label, Top, Italian (Determined by Destination)	411174-014	1
56		Label, Top, Dutch (Determined by Destination)	411174-015	1
57		Label, Front, 450SL, English (Determined by Destination)	413837-001	1
57		Label, Front, 450SL, German (Determined by Destination)	413837-002	1
57		Label, Front, 450SL, French (Determined by Destination)	413837-003	1
57		Label, Front, 450SL, Swedish (Determined by Destination)	413837-004	1
57		Label, Front, 450SL, Spanish (Determined by Destination)	413837-005	1
57		Label, Front, 450SL, Italian (Determined by Destination)	413837-006	1
57		Label, Front, 450SL, Dutch (Determined by Destination)	413837-007	1
58		Label, Cover, English (Determined by Destination)	414047-001	1
58		Label, Cover, German (Determined by Destination)	414047-002	1
58		Label, Cover, French (Determined by Destination)	414047-003	1
58		Label, Cover, Swedish (Determined by Destination)	414047-004	1
58		Label, Cover, Spanish (Determined by Destination)	414047-005	1
58		Label, Cover, Italian (Determined by Destination)	414047-006	1
58		Label, Cover, International (Determined by Destination)	414047-007	1
59		Spring, Chassis Ground, Small	414610-001	AR

Item	Reference Designation	Parts List	Part Number	Qty
59		Screw, PHD, 4-40 x 0.188, Modified (Determined by Destination)	409009-001	1
59		Screw, PHD, 4-40 x 0.188 (Determined by Destination)	45074-406	1
60		Adhesive, Diecut, Front Left	415098-002	1
61		Tram 100 - 850 A and SL Module Service Manual	404422-065	1
62		Label, CE Mark	408230-008	1
63		PC Post, 2 x 7	412062-004	1
64		PC Post, 2 x 11	412062-005	1

Assembly Revisions PN 412654

The baseline revision for this assembly is pn 412654-001H. To convert the parts list back to a previous revision, change all part numbers, descriptions, and quantities as indicated in the revision tables given below.

PN 412654-001A

Item	Reference Designation	Description	Revision's Part Number	Baseline Part Number	Qty
35	A9	DAS 400 Module, 10-Lead	411167-001	417121-001	1
37	A6	NBP Valve Assembly	413021-001	416153-001	1
50		Adhesive, Loctite Prism 411	4851-082	415098-001	AR
51		Module Processor PCB	800210-002	800210-005	1
52	A8	NBP PCB	800316-001	800316-002	1
59		Spring, Chassis Ground, Small	Not Used	414610-001	AR
60		Adhesive, Diecut, Front Left	Not Used	415098-002	1
62		Label, CE Mark	Not Used	408230-008	1
63		PC Post, 2 x 7	Not Used	412062-004	1
64		PC Post, 2 x 11	Not Used	412062-005	1

PN 412654-001B

This revision was a documentation change that does not affect this manual.
Refer to pn 412654-001A for changes to the parts list.

PN 412654-001C

Item	Reference Designation	Description	Revision's Part Number	Baseline Part Number	Qty
35	A9	DAS 400 Module, 10-Lead	411167-001	417121-001	1
37	A6	NBP Valve Assembly	413021-001	416153-001	1
51		Module Processor PCB	800210-002	800210-005	1
52	A8	NBP PCB	800316-001	800316-002	1
62		Label, CE Mark	Not Used	408230-008	1
63		PC Post, 2 x 7	Not Used	412062-004	1
64		PC Post, 2 x 11	Not Used	412062-005	1

PN 412654-001D

This revision was a documentation change that does not affect this manual.
Refer to pn 412654-001C for changes to the parts list.

PN 412654-001E

This revision was a documentation change that does not affect this manual.
Refer to pn 412654-001C for changes to the parts list.

PN 412654-001F

Item	Reference Designation	Description	Revision's Part Number	Baseline Part Number	Qty
35	A9	DAS 400 Module, 10-Lead	411167-001	417121-001	1
37	A6	NBP Valve Assembly	413021-001	416153-001	1
52	A8	NBP PCB	800316-001	800316-002	1

PN 412651-001G

Item	Reference Designation	Description	Revision's Part Number	Baseline Part Number	Qty
35	A9	DAS 400 Module, 10-Lead	411167-001	417121-001	1
52	A8	NBP PCB	800316-001	800316-002	1

For your notes

12 TRAM 500A MODULE PN 408003

General **12-2**
Circuit Boards 12-2
Tram 500A Configurations 12-2

Exploded View PN 408003C **12-3**

Schematic Diagram PN 408003C **12-5**

Parts List PN 408003C **12-7**

Assembly Revisions PN 408003 ..... **12-9**

General

Circuit Boards

Details about the circuit boards contained in the Tram 500A are discussed in later chapters arranged by part number.

Table 12-1. Circuit Board Overview

Module Type	Upper Level	Leadwire Configuration	DAS Module	Acquisition Processor PCB	Module Processor PCB
Tram 500A	408003-0XX	5-Leadwire	408133-001	800330-002	800210-005

Tram 500A Configurations

At the time of this writing, we make 16 configurations of the Tram 500A module. The differences between configurations are in the power frequency, the type of labelling, and the units of measure used. The table below lists the available configurations.

Table 12-2.

Part Number	Rev	Power *f* (Hz)	Labels	Units of Measure
408003-001	B	60	English	English
408003-002	A	50	English	English
408003-003	B	60	English	English
408003-004	A	50	English	English
408003-005	A	60	English	SI
408003-006	A	50	English	SI
408003-007	A	60	English	SI
408003-008	A	50	English	SI
408003-011	A	60	Icon	English
408003-012	A	50	Icon	English
408003-013	A	60	Icon	English
408003-014	A	50	Icon	English
408003-015	A	60	Icon	SI
408003-016	B	50	Icon	SI
408003-017	A	60	Icon	SI
408003-018	B	50	Icon	SI

Part number 408003A without a dashed suffix (ie, pn 408003A, as opposed to pn 408003-001A or pn 408003-002A) refers to all of the assemblies listed in the table above. Unless otherwise noted, all assemblies are the same.

Exploded View

PN 408003C

1 of 2

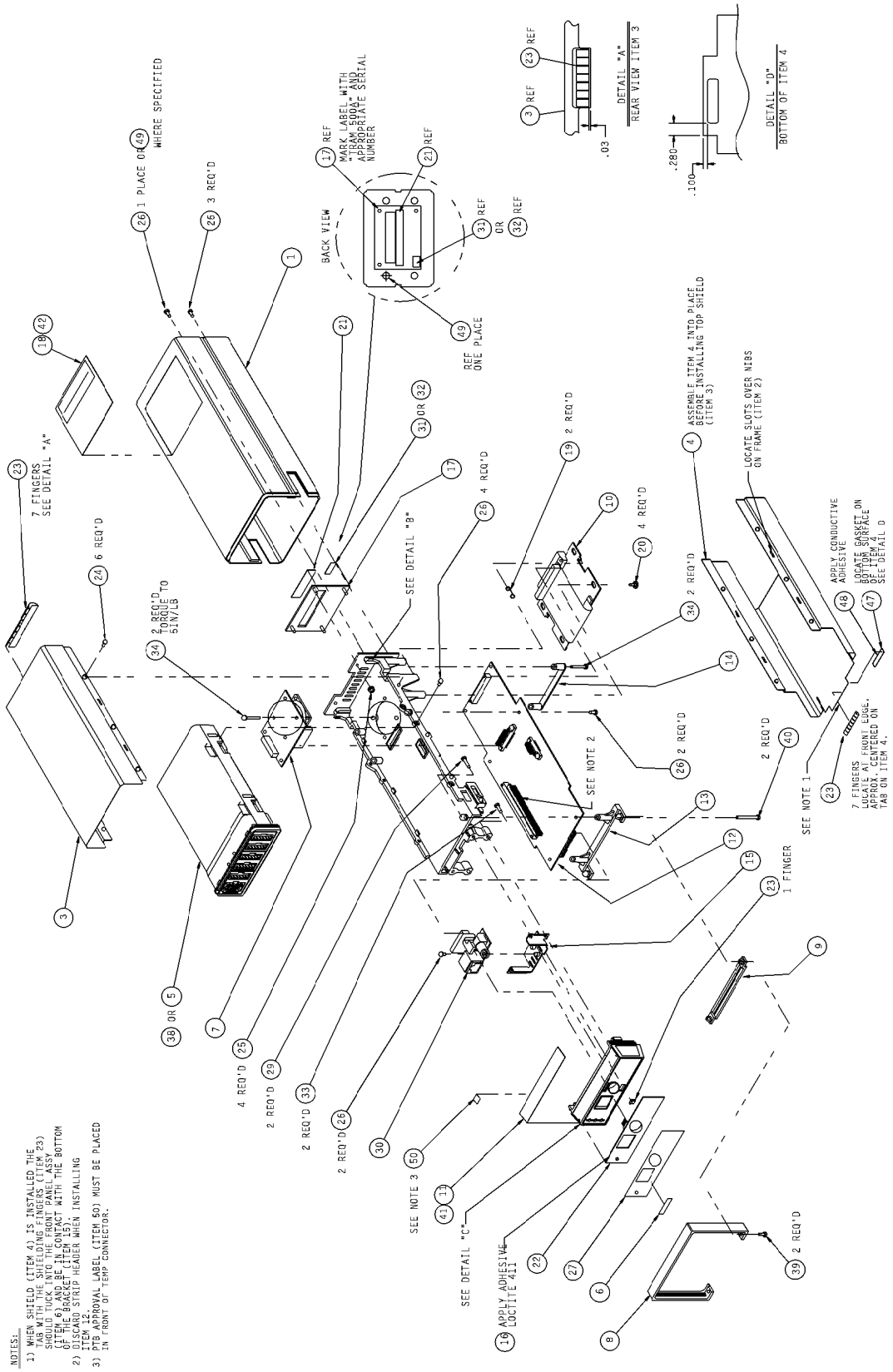

2 of 2

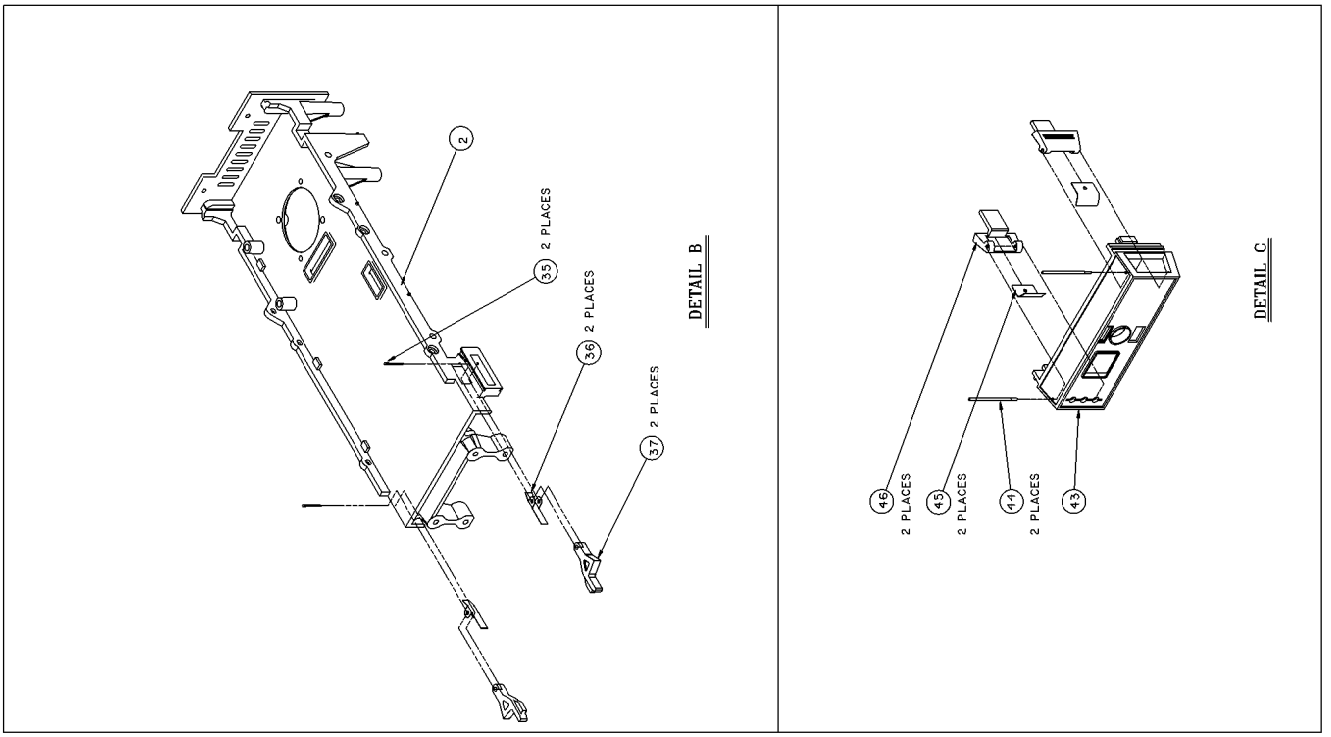
2
35 2 PLACES
36 2 PLACES
37 2 PLACES
DETAIL B
46 2 PLACES
45 2 PLACES
44 2 PLACES
43
DETAIL C

Schematic Diagram PN 408003C

1 of 2

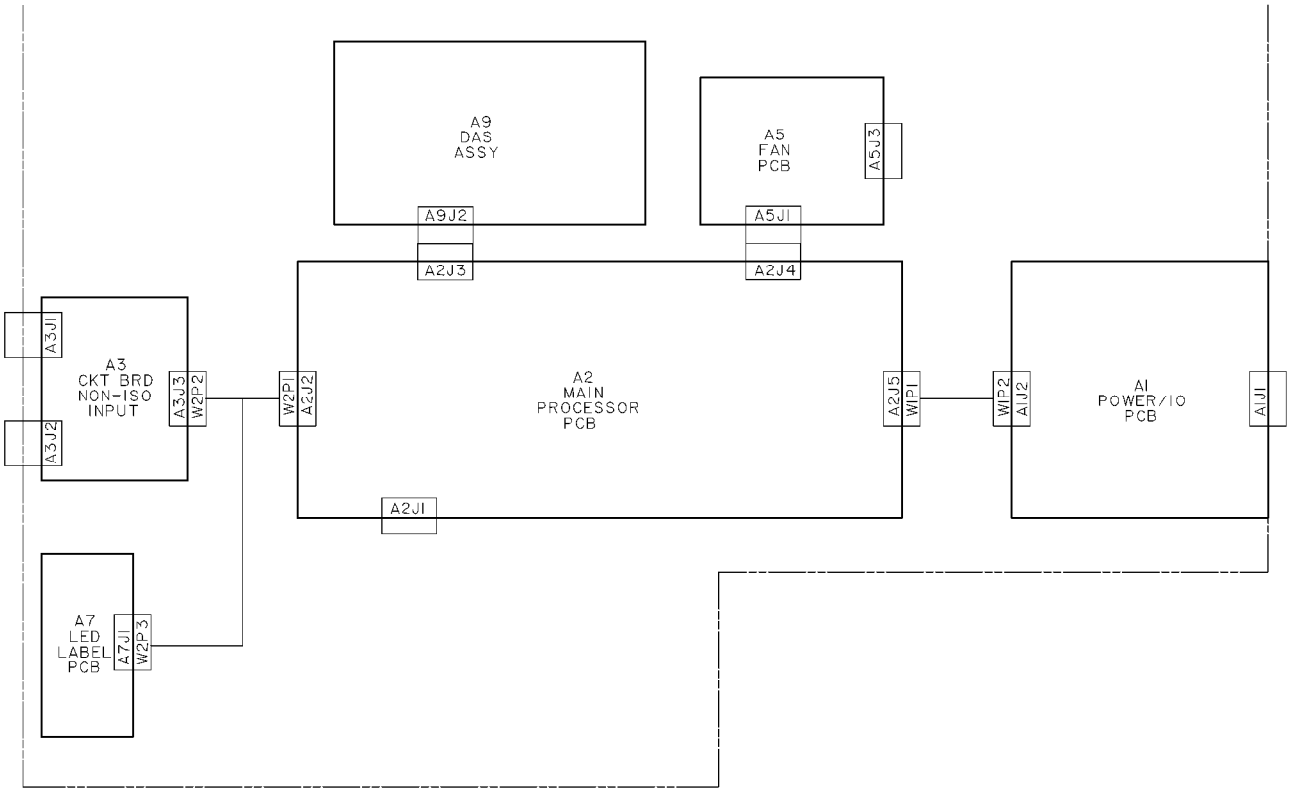

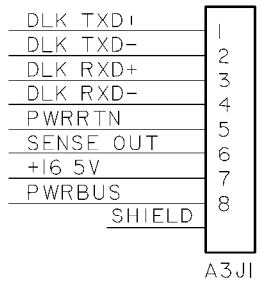

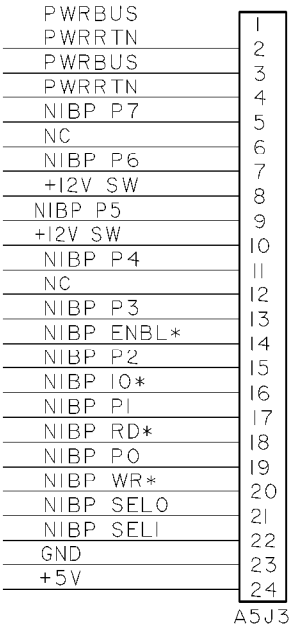

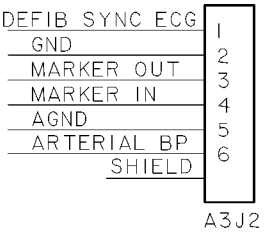

2 of 2

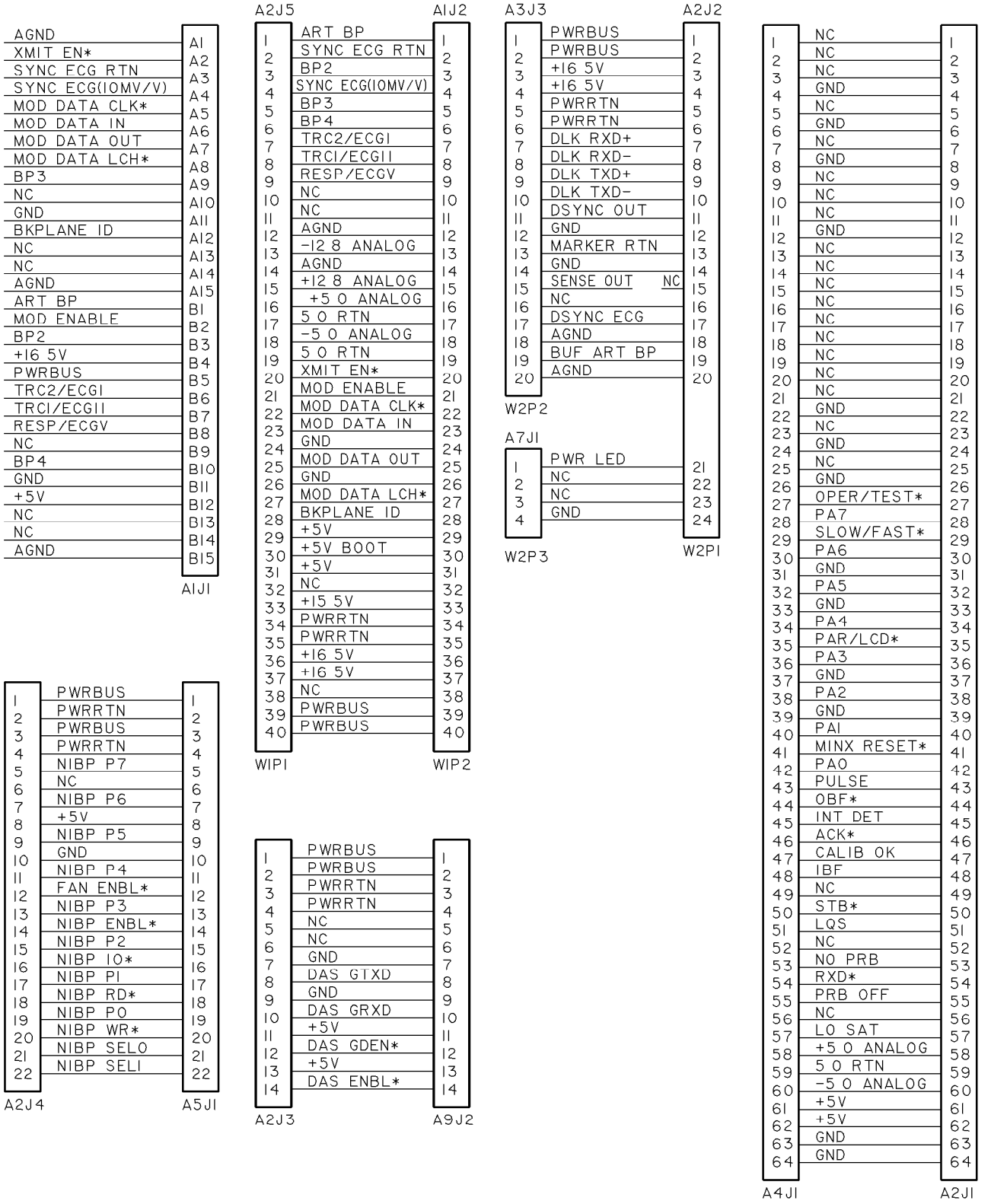
A1J1
AGND
XMIT EN*
SYNC ECG RTN
SYNC ECG(10MV/V)
MOD DATA CLK*
MOD DATA IN
MOD DATA OUT
MOD DATA LCH*
BP3
NC
GND
BKPLANE ID
NC
NC
AGND
ART BP
MOD ENABLE
BP2
+16 5V
PWRBUS
TRC2/ECG1
TRC1/ECG11
RESP/ECGV
NC
BP4
GND
+5V
NC
NC
AGND
A2J5
W1P1
ART BP
SYNC ECG RTN
BP2
SYNC ECG(10MV/V)
BP3
BP4
TRC2/ECG1
TRC1/ECG11
RESP/ECGV
NC
NC
AGND
-12 8 ANALOG
AGND
+12 8 ANALOG
+5 0 ANALOG
5 0 RTN
-5 0 ANALOG
5 0 RTN
XMIT EN*
MOD ENABLE
MOD DATA CLK*
MOD DATA IN
GND
MOD DATA OUT
GND
MOD DATA LCH*
BKPLANE ID
+5V
+5V BOOT
+5V
NC
+15 5V
PWRRTN
PWRRTN
+16 5V
+16 5V
NC
PWRBUS
PWRBUS
W1P2
A1J2
A3J3
W2P2
PWRBUS
PWRBUS
+16 5V
+16 5V
PWRRTN
PWRRTN
DLK RXD+
DLK RXD-
DLK TXD+
DLK TXD-
DSYNC OUT
GND
MARKER RTN
GND
SENSE OUT
NC
NC
DSYNC ECG
AGND
BUF ART BP
AGND
A7J1
W2P3
PWR LED
NC
NC
GND
A2J2
W2P1
A2J4
PWRBUS
PWRRTN
PWRBUS
PWRRTN
NIBP P7
NC
NIBP P6
+5V
NIBP P5
GND
NIBP P4
FAN ENBL*
NIBP P3
NIBP ENBL*
NIBP P2
NIBP 10*
NIBP P1
NIBP RD*
NIBP P0
NIBP WR*
NIBP SEL0
NIBP SEL1
A5J1
A2J3
PWRBUS
PWRBUS
PWRRTN
PWRRTN
NC
NC
GND
DAS GTXD
GND
DAS GRXD
+5V
DAS GDEN*
+5V
DAS ENBL*
A9J2
A4J1
NC
NC
NC
GND
NC
GND
NC
GND
NC
NC
NC
GND
NC
NC
NC
NC
NC
NC
NC
NC
NC
GND
NC
GND
NC
GND
OPER/TEST*
PA7
SLOW/FAST*
PA6
GND
PA5
GND
PA4
PAR/LCD*
PA3
GND
PA2
GND
PA1
MINX RESET*
PA0
PULSE
OBF*
INT DET
ACK*
CALIB OK
IBF
NC
STB*
LQS
NC
NO PRB
RXD*
PRB OFF
NC
LO SAT
+5 0 ANALOG
5 0 RTN
-5 0 ANALOG
+5V
+5V
GND
GND
A2J1

Parts List PN 408003C

Item	Reference Designation	Parts List	Part Number	Qty
1		Cover, Module	400895-001	1
2		Frame	400982-001	1
3		Shield, Top	401679-001	1
4		Shield, Bottom	401679-002	1
5		500/600 Acquisition Module, 5-Lead	408133-001	*
6		Label, Leadwire Warming	414097-001	*
7		Fan PCB	403549-002	1
8		Trim, Rubber, Front Bezel	404620-001	1
9		Mounting Strap, Trim	404621-001	1
10		Power Supply PCB	401309-002	1
11		Label, Isolated Connector Function, Tram 500A/ 600A, English	402312-001	*
12		Module Processor PCB	800210-001	1
13		Circuit Board/Bezel Mount	404762-001	1
14		Bracket, Power Supply PCB	406254-001	1
15		Plate, Chassis Ground, Bottom/Front	402317-001	1
16		Adhesive, Loctite Prism 411	4851-082	AR
17		Plate, Chassis Ground, Rear	404680-001	1
18		Label, Cover, English	403439-001	*
19		Spring, Compression	402315-001	2
20		Screw, Power Supply PCB Mounting, SST, 4-40	402214-001	4
21		Label, Model/Serial Number	404525-006	1
22		Power Indicator PCB	403170-009	1
23		Spring, Chassis Ground, Rear	403741-001	AR
24		Screw, FLH, 100°, Phillips, SST, 4-40 x 3/16	4505-406	6
25		Nut, Hex, 4-40	4521-304	4
26		Screw, BDGH, Phillips, 4-40 x 3/16	45074-406	12
27		Label, Lower Bezel	408162-003	1
29		Screw, 4-40 x 7/8	404069-001	2
30		Non-Isolated Input PCB	401315-002	1
31		Label, 60-Hz	70386-001	*
32		Label, 50-Hz	70386-002	*
33		Screw, BDGH, Phillips, 4-40 x 5/8	45074-420	2
34		Screw, BDGH, Phillips, 4-40 x 3/4	45074-424	4
35		Pin, Latch	406037-001	2
36		Spring, Latch	406019-001	2
37		Latch	401682-001	2
38		500/600 Acquisition Module, 10-Lead	408133-002	*
39		Screw, BDGH, Phillips, 4-40 x 3/8	45074-412	2
40		Screw, BDGH, Phillips, 4-40 x 1-1/8	45074-436	2

Item	Reference Designation	Parts List	Part Number	Qty
41		Label, Isolated Connector Function, Tram 500A/ 600A, Icon	402312-002	*
42		Label, Cover, Icon	403439-002	*
43		Front Bezel, Lower	401105-005	1
44		Pin, Latch	402806-001	2
45		Spring, Flat, SST	405041-001	2
46		Button, Latch	402106-001	2
47		Gasket, Silver-Nickel	407894-001	1
48		Adhesive, Conductive	4851-088	AR
49		Screw, PNHD, 4-40 x 0.188	409009-001	*
50		Label PTB Approval	409047-002	*

*See the following chart:

	Assembly Configuration															
Item	-001	-002	-003	-004	-005	-006	-007	-008	-011	-012	-013	-014	-015	-016	-017	-018
5	1	1	–	–	1	1	–	–	1	1	–	–	1	1	–	–
6	1	–	1	–	–	–	–	–	–	–	–	–	–	–	–	–
11	1	1	1	1	1	1	1	1	–	–	–	–	–	–	–	–
18	1	1	1	1	1	1	1	1	–	–	–	–	–	–	–	–
31	1	–	1	–	1	–	1	–	1	–	1	–	1	–	1	–
38	–	–	1	1	–	–	1	1	–	–	1	1	–	–	1	1
41	–	–	–	–	–	–	–	–	1	1	1	1	1	1	1	1
42	–	–	–	–	–	–	–	–	1	1	1	1	1	1	1	1
49	–	–	–	–	–	–	–	–	–	–	–	–	–	1	–	1
50	–	–	–	–	–	–	–	–	–	–	–	–	–	1	–	1

Assembly Revisions PN 408003

The baseline revision for this assembly is pn 408003C. To convert the parts list back to a previous revision, change all part numbers, descriptions, and quantities as indicated in the revision tables given below.

PN 408003A

Item	Reference Designation	Description	Revision's Part Number	Baseline Part Number	Qty
6		Label, Leadwires Warning	Not Used	414097-001	1
49		Screw, BDGH, 4-40 x 0.188	45074-406	409009-001	*
50		Label, German PTB	Not Used	409047-002	1

PN 408003B

Item	Reference Designation	Description	Revision's Part Number	Baseline Part Number	Qty
6		Label, Leadwires Warning	Not Used	414097-001	1

For your notes

13 TRAM 600A/SL MODULE PN 408004/411163

General **13-2**
Circuit Boards 13-2
Tram 600A Configurations 13-2

Exploded View PN 408004C **13-3**

Schematic Diagram PN 408004C **13-5**

Parts List PN 408004C **13-7**

Assembly Revisions PN 408004 ..... **13-9**

Exploded View PN 411163-001J **13-10**

Schematic Diagram PN 411163-001J **13-12**

Parts List PN 411163-001J **13-14**

Assembly Revisions PN 411163 ..... **13-16**

General

Circuit Boards

Details about the circuit boards contained in the Tram 600A/SL are discussed in later chapters arranged by part number.

Table 13-1. Circuit Board Overview

Module Type	Upper Level	Leadwire Configuration	DAS Module	Acquisition Processor PCB	Module Processor PCB
Tram 600A	408004-0XX	5-Leadwire	408133-002	800330-004	800210-005
Tram 600SL	411163-001A–H	10-Leadwire	411168-001	800330-004	800210-005
Tram 600SL	411163-001J	10-Leadwire	417122-001 (Replaced 411168-001)	801040-001	800210-005

Tram 600A Configurations

At the time of this writing, we make 16 configurations of the Tram 600A module. The differences between configurations are in the power frequency, the type of labelling, and the units of measure used. The table below lists the available configurations.

Table 13-2. Configurations

Part Number	Rev	Power *f* (Hz)	Labels	Units of Measure
408004-001	B	60	English	English
408004-002	A	50	English	English
408004-003	B	60	English	English
408004-004	A	50	English	English
408004-005	A	60	English	SI
408004-006	A	50	English	SI
408004-007	A	60	English	SI
408004-008	A	50	English	SI
408004-011	A	60	Icon	English
408004-012	A	50	Icon	English
408004-013	A	60	Icon	English
408004-014	A	50	Icon	English
408004-015	A	60	Icon	SI
408004-016	B	50	Icon	SI
408004-017	A	60	Icon	SI
408004-018	B	50	Icon	SI

Part number 408004A without a dashed suffix (ie, pn 408004A, as opposed to pn 408004-001A or pn 408004-002A) refers to all of the assemblies listed in the table above. Unless otherwise noted, all assemblies are the same.

Exploded View

PN 408004C

1 of 2

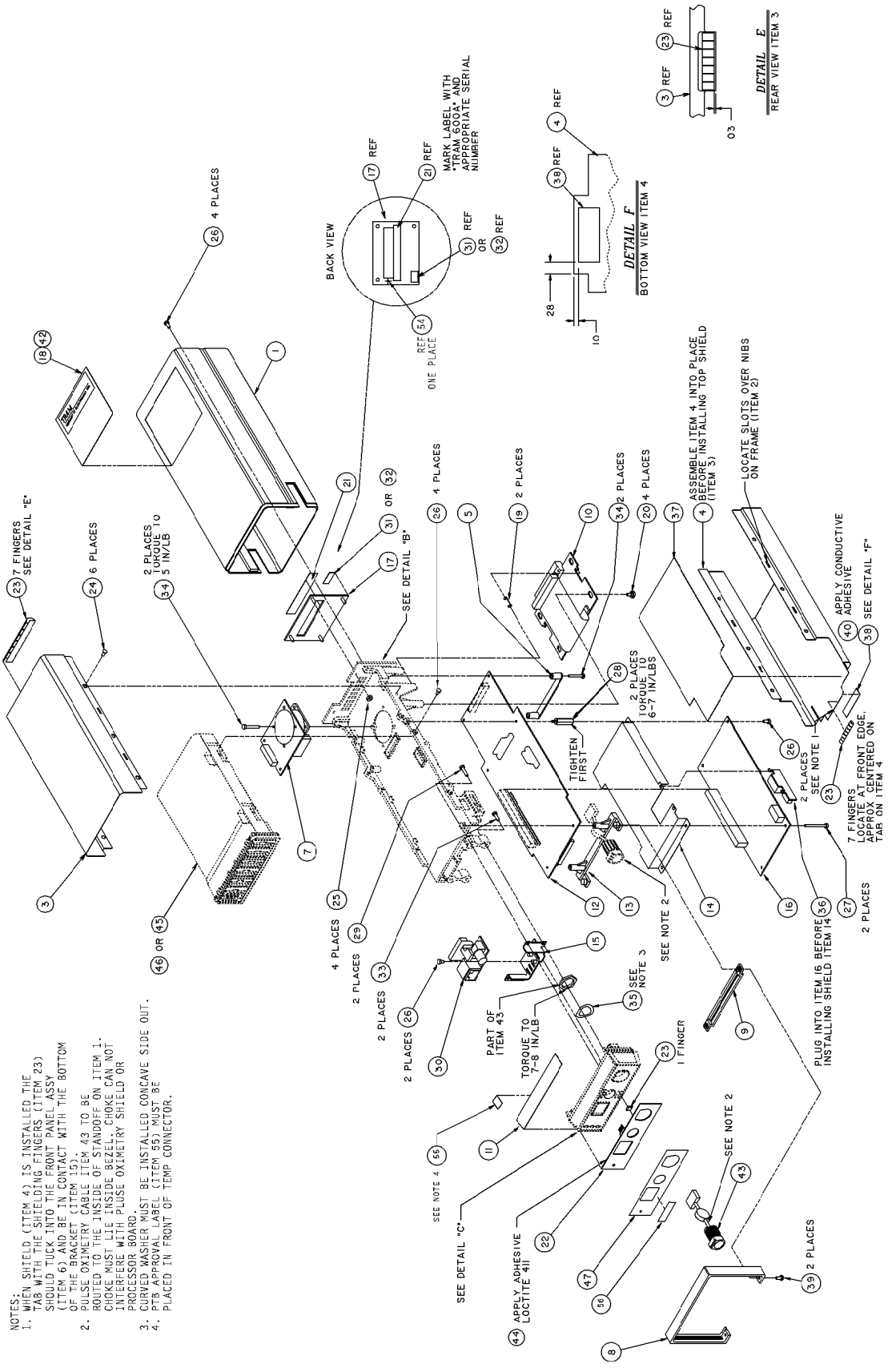

2 of 2

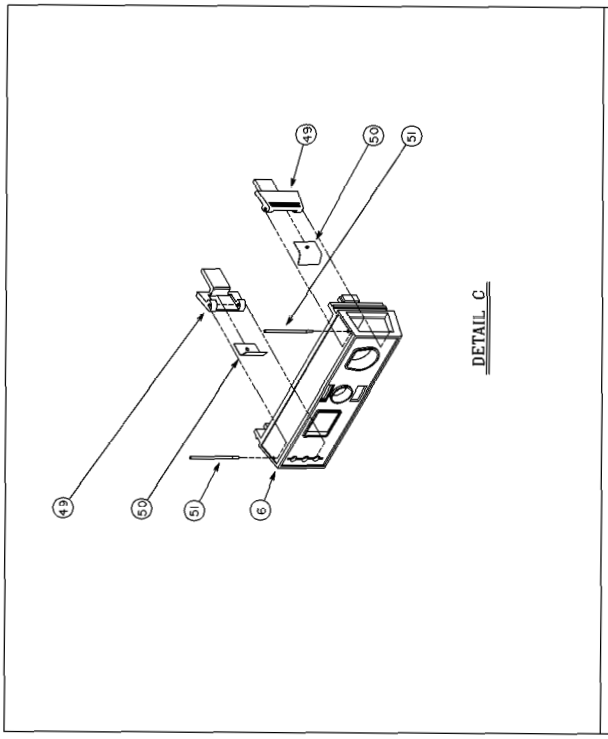

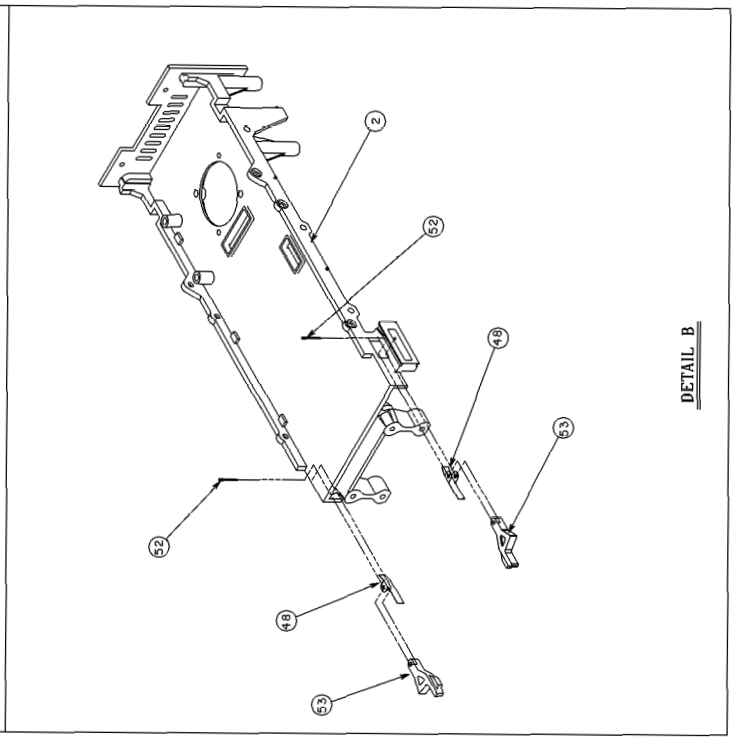

Schematic Diagram PN 408004C

1 of 3

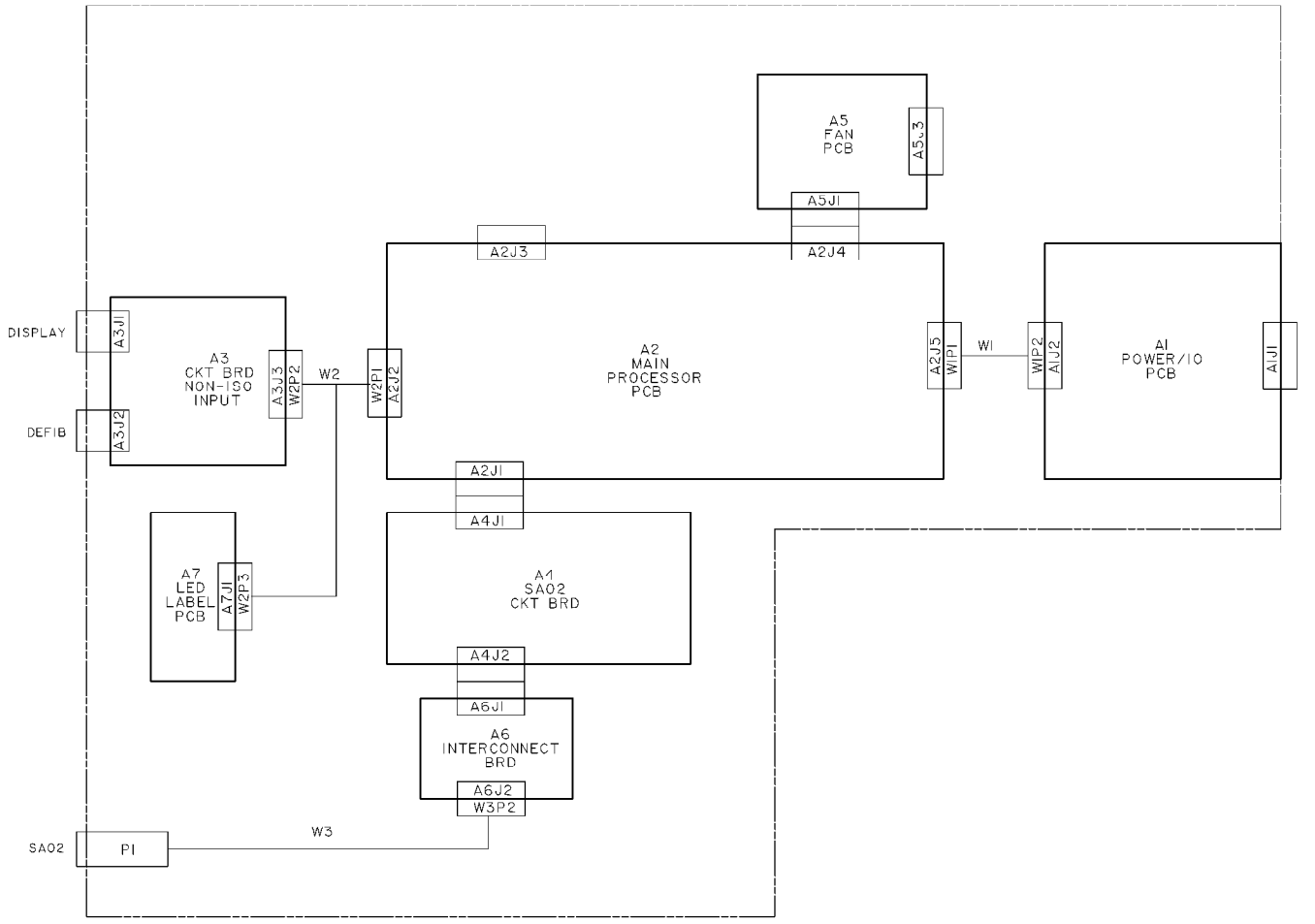

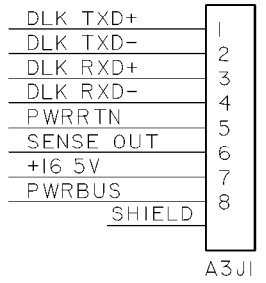

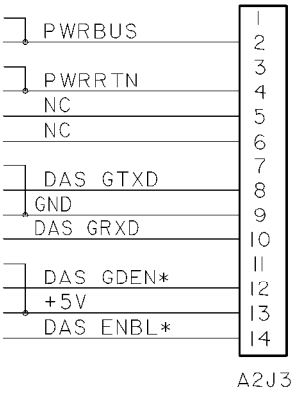

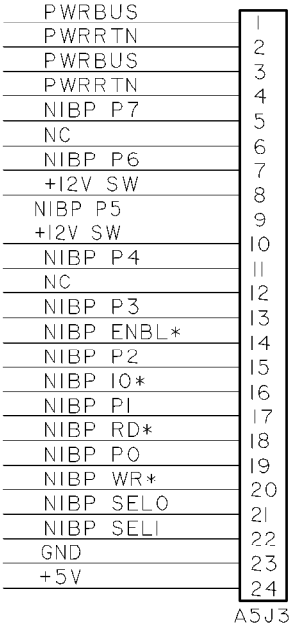

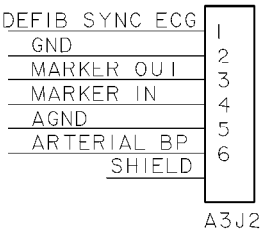

2 of 2

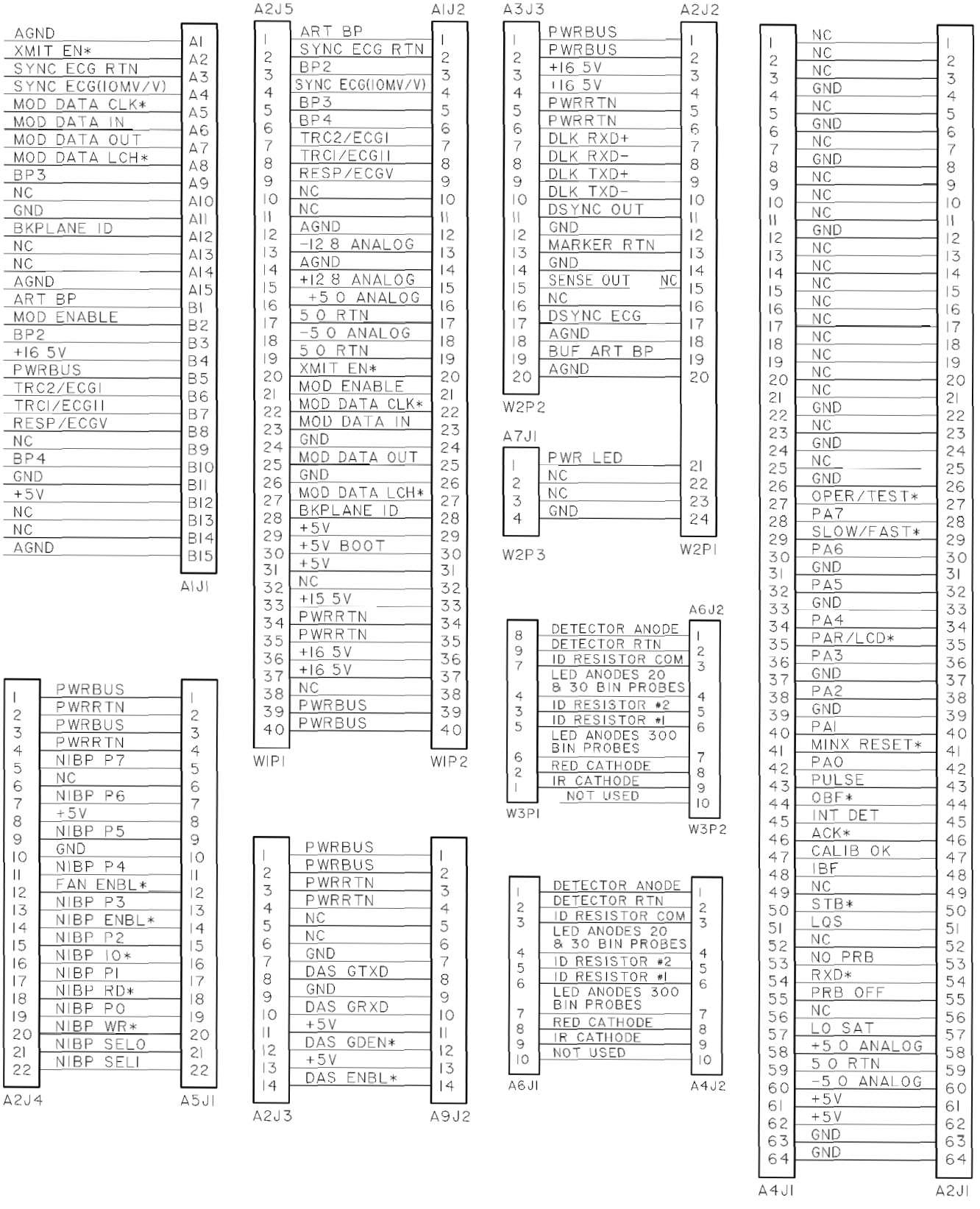
A1J1
AGND
XMIT EN*
SYNC ECG RTN
SYNC ECG(10MV/V)
MOD DATA CLK*
MOD DATA IN
MOD DATA OUT
MOD DATA LCH*
BP3
NC
GND
BKPLANE ID
NC
NC
AGND
ART BP
MOD ENABLE
BP2
+16 5V
PWRBUS
TRC2/ECGI
TRCI/ECGII
RESP/ECGV
NC
BP4
GND
+5V
NC
NC
AGND
A2J5
WIP1
ART BP
SYNC ECG RTN
BP2
SYNC ECG(10MV/V)
BP3
BP4
TRC2/ECGI
TRCI/ECGII
RESP/ECGV
NC
NC
AGND
-12 8 ANALOG
AGND
+12 8 ANALOG
+5 0 ANALOG
5 0 RTN
-5 0 ANALOG
5 0 RTN
XMIT EN*
MOD ENABLE
MOD DATA CLK*
MOD DATA IN
GND
MOD DATA OUT
GND
MOD DATA LCH*
BKPLANE ID
+5V
+5V BOOT
+5V
NC
+15 5V
PWRRTN
PWRRTN
+16 5V
+16 5V
NC
PWRBUS
PWRBUS
A1J2
WIP2
A3J3
W2P2
PWRBUS
PWRBUS
+16 5V
+16 5V
PWRRTN
PWRRTN
DLK RXD+
DLK RXD-
DLK TXD+
DLK TXD-
DSYNC OUT
GND
MARKER RTN
GND
SENSE OUT NC
NC
DSYNC ECG
AGND
BUF ART BP
AGND
A2J2
W2P1
A7J1
W2P3
PWR LED
NC
NC
GND
A2J4
A5J1
PWRBUS
PWRRTN
PWRBUS
PWRRTN
NIBP P7
NC
NIBP P6
+5V
NIBP P5
GND
NIBP P4
FAN ENBL*
NIBP P3
NIBP ENBL*
NIBP P2
NIBP 10*
NIBP PI
NIBP RD*
NIBP PO
NIBP WR*
NIBP SELO
NIBP SELI
A2J3
A9J2
PWRBUS
PWRBUS
PWRRTN
PWRRTN
NC
NC
GND
DAS GTXD
GND
DAS GRXD
+5V
DAS GDEN*
+5V
DAS ENBL*
A6J2
W3P1
W3P2
DETECTOR ANODE
DETECTOR RTN
ID RESISTOR COM
LED ANODES 20 & 30 BIN PROBES
ID RESISTOR #2
ID RESISTOR #1
LED ANODES 300 BIN PROBES
RED CATHODE
IR CATHODE
NOT USED
A6J1
A4J2
DETECTOR ANODE
DETECTOR RTN
ID RESISTOR COM
LED ANODES 20 & 30 BIN PROBES
ID RESISTOR #2
ID RESISTOR #1
LED ANODES 300 BIN PROBES
RED CATHODE
IR CATHODE
NOT USED
A4J1
A2J1
NC
NC
NC
GND
NC
GND
NC
GND
NC
NC
GND
NC
NC
NC
NC
NC
NC
NC
NC
GND
NC
GND
NC
GND
OPER/TEST*
PA7
SLOW/FAST*
PA6
GND
PA5
GND
PA4
PAR/LCD*
PA3
GND
PA2
GND
PAI
MINX RESET*
PAO
PULSE
OBF*
INT DET
ACK*
CALIB OK
IBF
NC
STB*
LQS
NC
NO PRB
RXD*
PRB OFF
NC
LO SAT
+5 0 ANALOG
5 0 RTN
-5 0 ANALOG
+5V
+5V
GND
GND

Parts List PN 408004C

Item	Reference Designation	Parts List	Part Number	Qty
1		Cover, Module	400895-001	1
2		Frame	400982-001	1
3		Shield, Top	401679-001	1
4		Shield, Bottom	401679-002	1
5		Bracket, Power Supply PCB	406254-001	1
6		Front Bezel, Lower	401105-004	1
7		Fan PCB	403549-002	1
8		Trim, Rubber, Front Bezel	404620-001	1
9		Mounting Strap, Trim	404621-001	1
10		Power Supply PCB	401309-002	1
11		Label, Isolated Connector Function, Tram 500A/ 600A, English	402312-001	*
12		Module Processor PCB	800210-001	1
13		Circuit Board/Bezel Mount	404762-001	1
14		Shield, Pulse Oximetry PCB	401680-001	1
15		Plate, Chassis Ground, Bottom/Front	402317-001	1
16		Pulse Oximetry PCB	401189-001	1
17		Plate, Chassis Ground, Rear	404680-001	1
18		Label, Cover, English	403439-001	*
19		Spring, Compression	402315-001	2
20		Screw, Power Supply PCB Mounting, SST, 4-40	402214-001	4
21		Label, Model/Serial Number	404525-006	1
22		Power Indicator PCB	403170-008	1
23		Spring, Chassis Ground, Rear	403741-001	AR
24		Screw, FLH, 100°, Phillips, SST, 4-40 x 3/16	4505-406	6
25		Nut, Hex, 4-40	4521-304	4
26		Screw, BDGH, Phillips, 4-40 x 3/16	45074-406	12
27		Screw, BDGH, Phillips, 4-40 x 1-3/8	45074-438	2
28		Spacer, Male/Female, 4-40 x 0.875	4656-414	2
29		Screw, 4-40 x 7/8	404069-001	2
30		Non-Isolated Input PCB	401315-002	1
31		Label, 60-Hz	70386-001	*
32		Label, 50-Hz	70386-002	*
33		Screw, BDGH, Phillips, 4-40 x 5/8	45074-420	2
34		Screw, BDGH, Phillips, 4-40 x 3/4	45074-424	4
35		Washer, Pulse Oximetry Connector	4550-250	1
36		Interconnect PCB	800006-001	1
37		Insulator, Bottom Shield	404188-001	1
38		Gasket, Silver-Nickel	407894-001	1
39		Screw, BDGH, Phillips, 4-40 x 3/8	45074-412	2
40		Adhesive, Conductive	4851-088	1

Item	Reference Designation	Parts List	Part Number	Qty
41		Label, Isolated Connector Function, Tram 500A/ 600A, Icon	402312-002	*
42		Label, Cover, Icon	403439-002	*
43		Harness, Pulse Oximetry PCB-to-Connector	700091-001	1
44		Adhesive, Loctite Prism 411	4851-082	AR
45		500/600 Acquisition Module, 5-Lead	408133-001	*
46		500/600 Acquisition Module, 10-Lead	408133-002	*
47		Label, Lower Bezel	408162-004	1
48		Spring, Latch	406019-001	2
49		Button, Latch	402106-001	2
50		Spring, Flat, SST	405041-001	2
51		Pin, Latch	402806-001	2
52		Pin, Latch	406037-001	2
53		Latch	401682-001	2
54		Screw, PNHD, 4-40 x 0.188	409009-001	*
55		Label, PTB Approval	409047-002	*
56		Label, PTB Approval	414097-001	*

*See the following chart:

	Assembly Configuration															
Item	-001	-002	-003	-004	-005	-006	-007	-008	-011	-012	-013	-014	-015	-016	-017	-018
11	1	1	1	1	1	1	1	1	–	–	–	–	–	–	–	–
18	1	1	1	1	1	1	1	1	–	–	–	–	–	–	–	–
31	1	–	1	–	1	–	1	–	1	–	1	–	1	–	1	–
32	–	1	–	1	–	1	–	1	–	1	–	1	–	1	–	1
41	–	–	–	–	–	–	–	–	1	1	1	1	1	1	1	1
42	–	–	–	–	–	–	–	–	1	1	1	1	1	1	1	1
45	1	1	–	–	1	1	–	–	1	1	–	–	1	1	–	–
46	–	–	1	1	–	–	1	1	–	–	1	1	–	–	1	1
54	–	–	–	–	–	–	–	–	–	–	–	–	–	1	–	1
54	–	–	–	–	–	–	–	–	–	–	–	–	–	1	–	1
55	1	–	1	–	–	–	–	–	–	–	–	–	–	–	–	–

Assembly Revisions PN 408004

The baseline revision for this assembly is pn 408004C. To convert the parts list back to a previous revision, change all part numbers, descriptions, and quantities as indicated in the revision tables given below.

PN 408004A

Item	Reference Designation	Description	Revision's Part Number	Baseline Part Number	Qty
54		Screw, BDGH, 4-40 x 0.188	45074-406	409009-001	*
55		Label, German PTB	Not Used	409047-002	1
56		Label, Leadwires Warning	Not Used	414097-001	1

PN 408004B

Item	Reference Designation	Description	Revision's Part Number	Baseline Part Number	Qty
56		Label, Leadwires Warning	Not Used	414097-001	1

Exploded View

PN 411163-001J

1 of 2

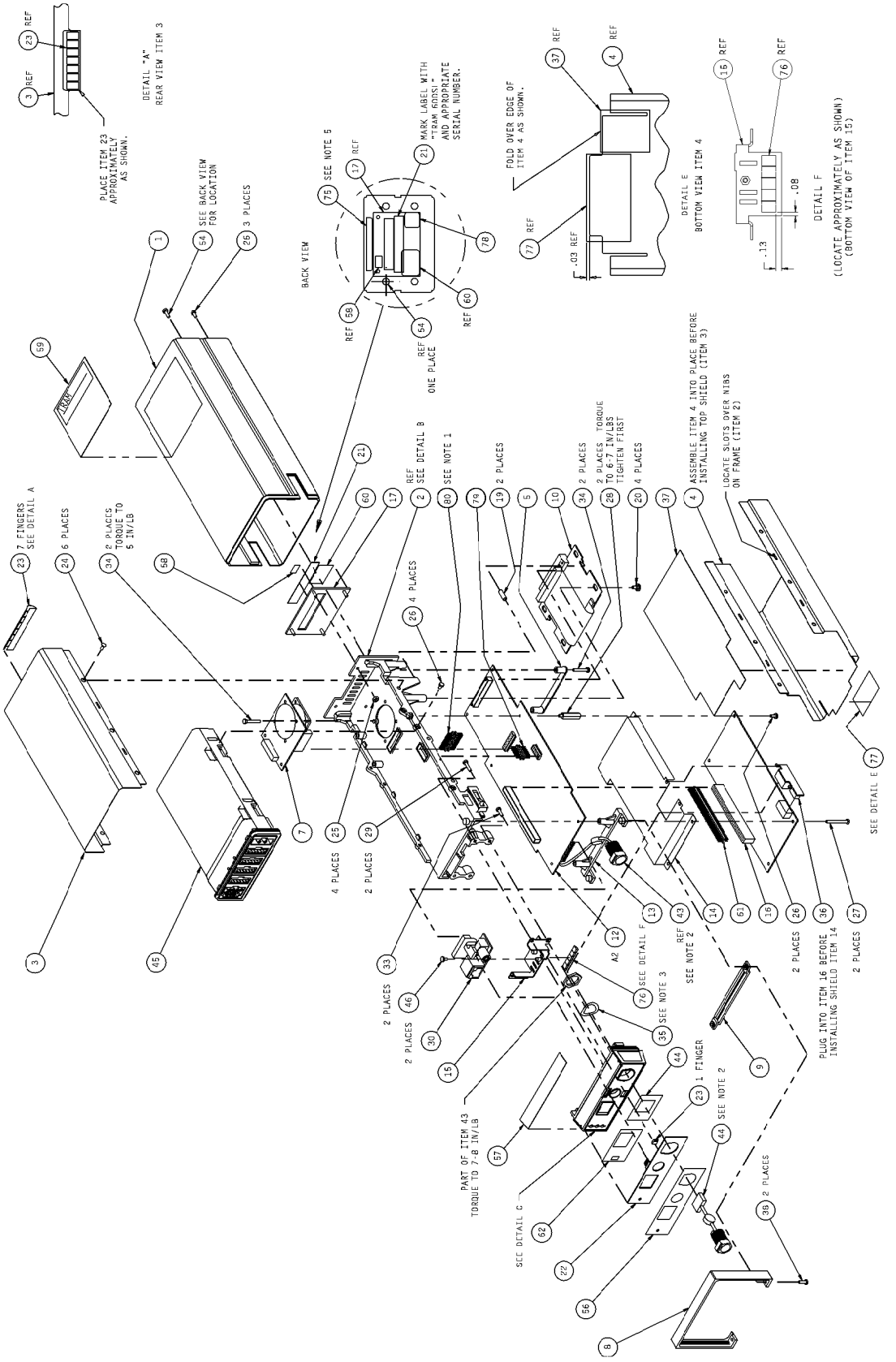

2 of 2

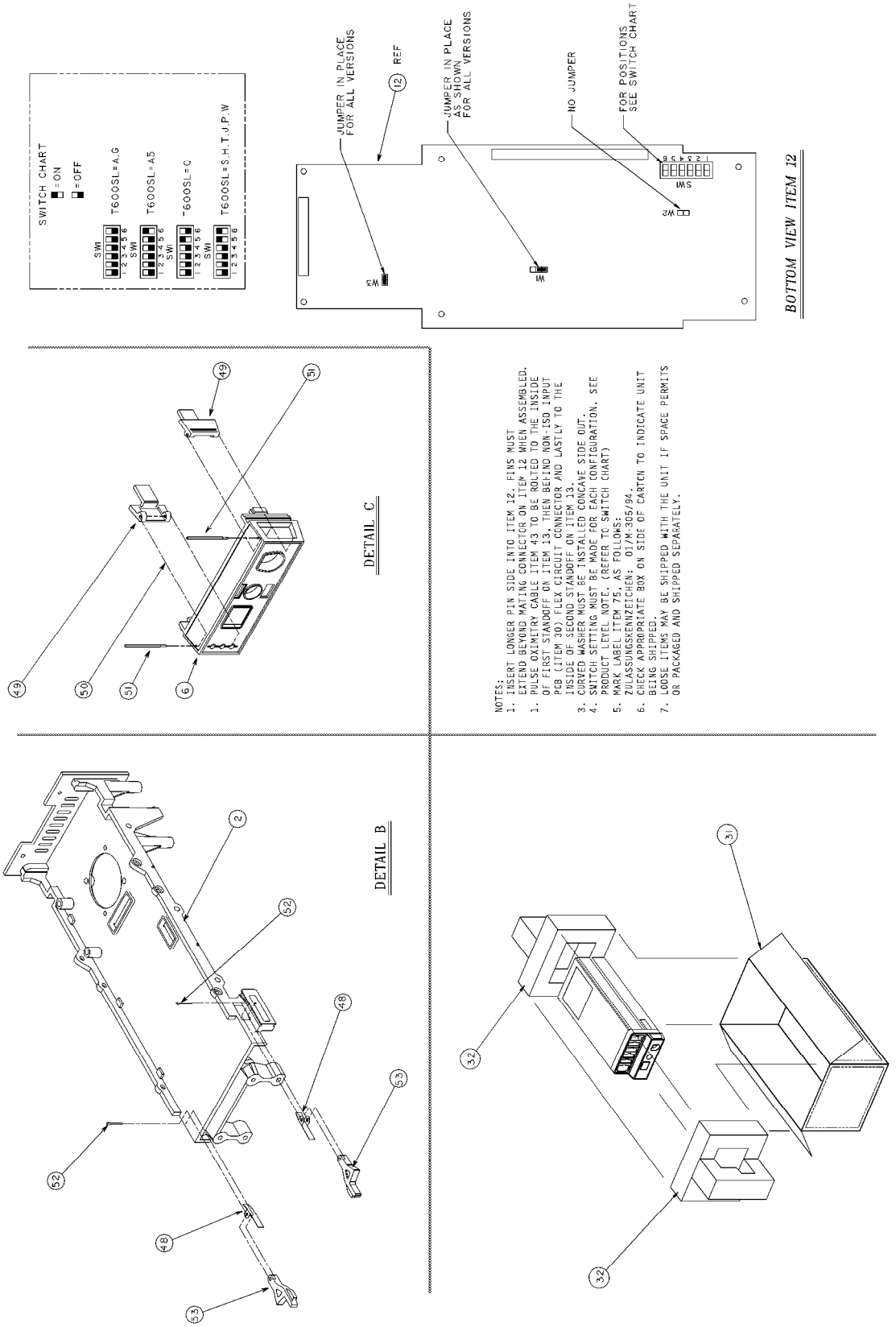
SWITCH CHART
■ = ON
■ = OFF
SW1
T600SL=A,G
SW1
T600SL=A5
SW1
T600SL=C
SW1
T600SL=S,H,T,J,P,W
JUMPER IN PLACE FOR ALL VERSIONS
REF
JUMPER IN PLACE AS SHOWN FOR ALL VERSIONS
NO JUMPER
FOR POSITIONS SEE SWITCH CHART
W3
W1
W2
SW1
BOTTOM VIEW ITEM 12
DETAIL C
DETAIL B
NOTES:
1. INSERT LONGER PIN SIDE INTO ITEM 12. PINS MUST EXTEND BEYOND MATING CONNECTOR ON ITEM 12 WHEN ASSEMBLED.
1. PULSE OXIMETRY CABLE ITEM 43 TO BE ROUTED TO THE INSIDE OF FIRST STANDOFF ON ITEM 13, THEN BEHIND NON-ISO INPUT PCB (ITEM 30) FLEX CIRCUIT CONNECTOR AND LASTLY TO THE INSIDE OF SECOND STANDOFF ON ITEM 13.
3. CURVED WASHER MUST BE INSTALLED CONCAVE SIDE OUT.
4. SWITCH SETTING MUST BE MADE FOR EACH CONFIGURATION. SEE PRODUCT LEVEL NOTE. (REFER TO SWITCH CHART)
5. MARK LABEL ITEM 75, AS FOLLOWS: ZULASSUNGSKENNZEICHEN: 01/M:305/94.
6. CHECK APPROPRIATE BOX ON SIDE OF CARTON TO INDICATE UNIT BEING SHIPPED.
7. LOOSE ITEMS MAY BE SHIPPED WITH THE UNIT IF SPACE PERMITS OR PACKAGED AND SHIPPED SEPARATELY.

Schematic Diagram PN 411163-001J

1 of 2

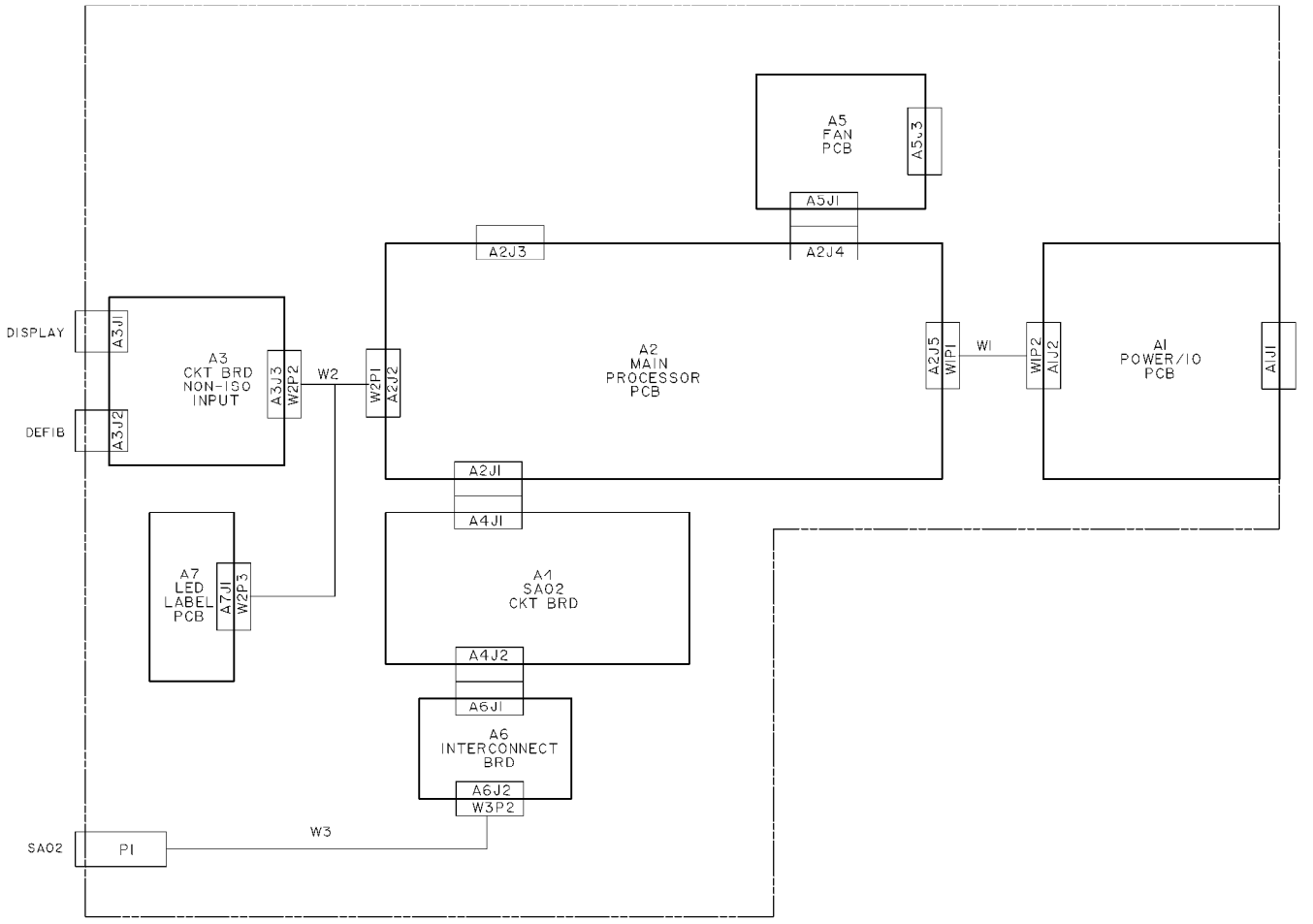

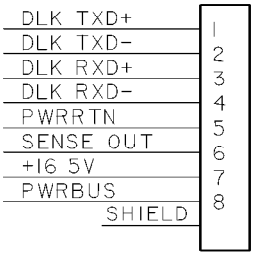

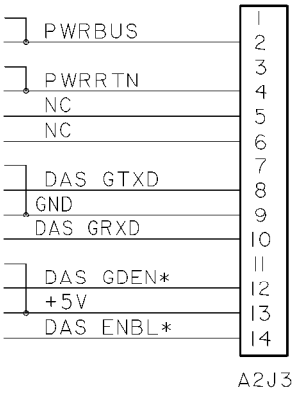

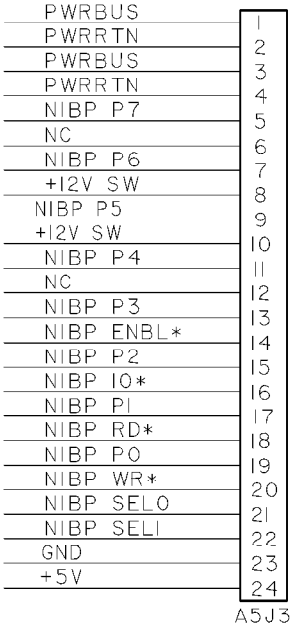

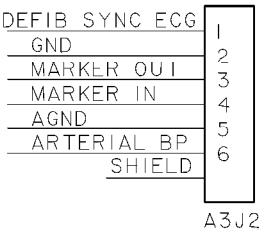

2 of 2

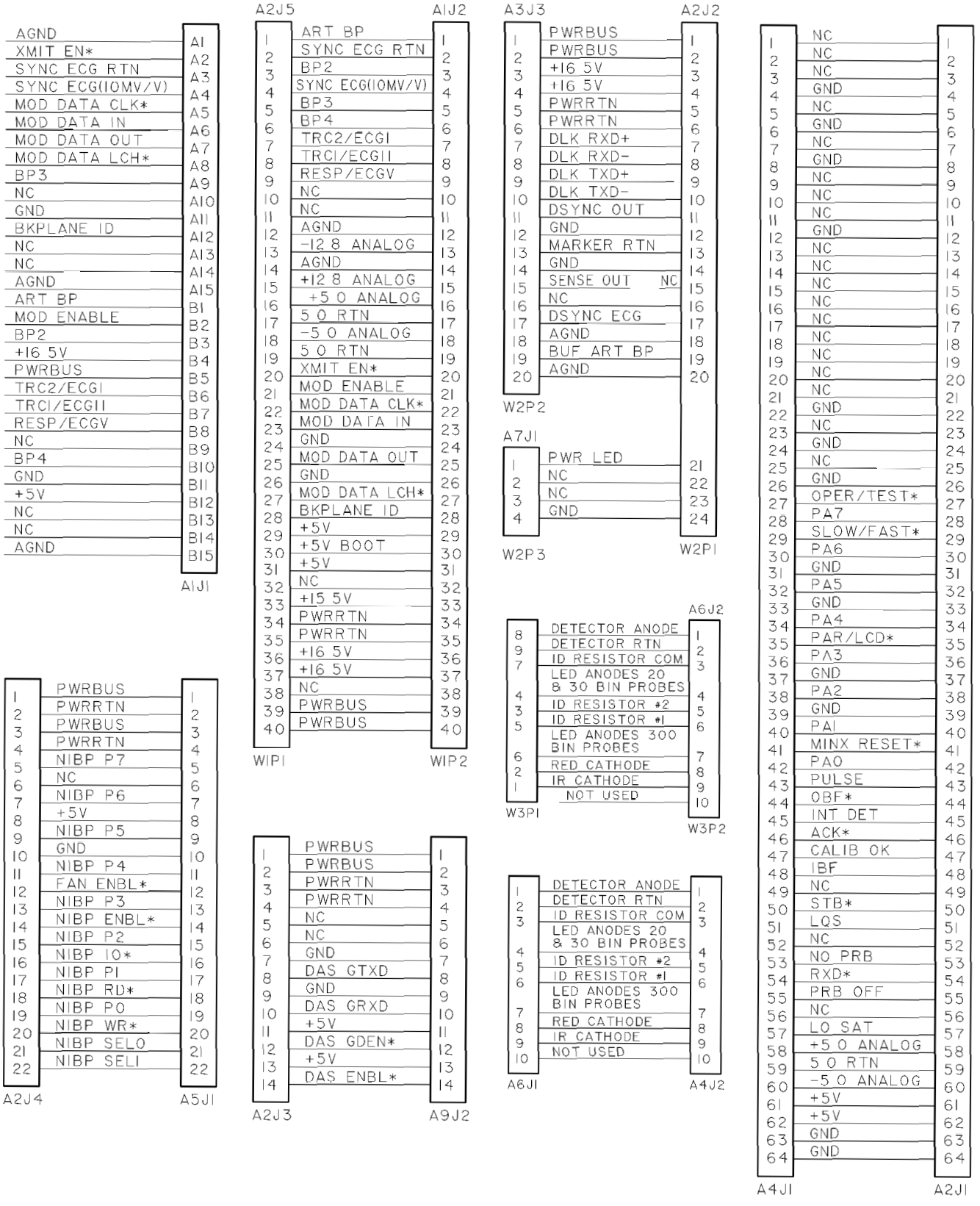
A1J1
AGND
XMIT EN*
SYNC ECG RTN
SYNC ECG(10MV/V)
MOD DATA CLK*
MOD DATA IN
MOD DATA OUT
MOD DATA LCH*
BP3
NC
GND
BKPLANE ID
NC
NC
AGND
ART BP
MOD ENABLE
BP2
+16 5V
PWRBUS
TRC2/ECGI
TRCI/ECGII
RESP/ECGV
NC
BP4
GND
+5V
NC
NC
AGND
A2J5
WIP1
ART BP
SYNC ECG RTN
BP2
SYNC ECG(10MV/V)
BP3
BP4
TRC2/ECGI
TRCI/ECGII
RESP/ECGV
NC
NC
AGND
-12 8 ANALOG
AGND
+12 8 ANALOG
+5 0 ANALOG
5 0 RTN
-5 0 ANALOG
5 0 RTN
XMIT EN*
MOD ENABLE
MOD DATA CLK*
MOD DATA IN
GND
MOD DATA OUT
GND
MOD DATA LCH*
BKPLANE ID
+5V
+5V BOOT
+5V
NC
+15 5V
PWRRTN
PWRRTN
+16 5V
+16 5V
NC
PWRBUS
PWRBUS
A1J2
WIP2
A3J3
W2P2
PWRBUS
PWRBUS
+16 5V
+16 5V
PWRRTN
PWRRTN
DLK RXD+
DLK RXD-
DLK TXD+
DLK TXD-
DSYNC OUT
GND
MARKER RTN
GND
SENSE OUT NC
NC
DSYNC ECG
AGND
BUF ART BP
AGND
A2J2
W2P1
A7J1
W2P3
PWR LED
NC
NC
GND
A2J4
A5J1
PWRBUS
PWRRTN
PWRBUS
PWRRTN
NIBP P7
NC
NIBP P6
+5V
NIBP P5
GND
NIBP P4
FAN ENBL*
NIBP P3
NIBP ENBL*
NIBP P2
NIBP IO*
NIBP PI
NIBP RD*
NIBP PO
NIBP WR*
NIBP SELO
NIBP SELI
A2J3
A9J2
PWRBUS
PWRBUS
PWRRTN
PWRRTN
NC
NC
GND
DAS GTXD
GND
DAS GRXD
+5V
DAS GDEN*
+5V
DAS ENBL*
A6J2
W3P1
W3P2
DETECTOR ANODE
DETECTOR RTN
ID RESISTOR COM
LED ANODES 20 & 30 BIN PROBES
ID RESISTOR #2
ID RESISTOR #1
LED ANODES 300 BIN PROBES
RED CATHODE
IR CATHODE
NOT USED
A6J1
A4J2
DETECTOR ANODE
DETECTOR RTN
ID RESISTOR COM
LED ANODES 20 & 30 BIN PROBES
ID RESISTOR #2
ID RESISTOR #1
LED ANODES 300 BIN PROBES
RED CATHODE
IR CATHODE
NOT USED
A4J1
A2J1
NC
NC
NC
GND
NC
GND
NC
GND
NC
NC
GND
NC
NC
NC
NC
NC
NC
NC
GND
NC
GND
NC
GND
OPER/TEST*
PA7
SLOW/FAST*
PA6
GND
PA5
GND
PA4
PAR/LCD*
PA3
GND
PA2
GND
PAI
MINX RESET*
PAO
PULSE
OBF*
INT DET
ACK*
CALIB OK
IBF
NC
STB*
LQS
NC
NO PRB
RXD*
PRB OFF
NC
LO SAT
+5 0 ANALOG
5 0 RTN
-5 0 ANALOG
+5V
+5V
GND
GND

Parts List PN 411163-001J

Item	Reference Designation	Parts List	Part Number	Qty
1		Cover, Module	400895-001	1
2		Frame	400982-001	1
3		Shield, Top	401679-001	1
4		Shield, Bottom	401679-002	1
5		Bracket, Power Supply PCB	406254-001	1
6		Front Bezel, Lower	401105-004	1
7	A5	Fan PCB	403549-002	1
8		Trim, Rubber, Front Bezel	404620-001	1
9		Mounting Strap, Trim	404621-001	1
10	A1	Power Supply PCB	401309-002	1
12	A2	Module Processor PCB	800210-005	1
13		Circuit Board/Bezel Mount	404762-001	1
14		Shield, Pulse Oximetry PCB	401680-001	1
15		Plate, Chassis Ground, Bottom/Front	402317-001	1
16	A4	Pulse Oximetry PCB	401189-001	1
17		Plate, Chassis Ground, Rear	404680-001	1
18		Tram 100 - 800 A & SL Modules Service Manual	404422-065	AR
19		Spring, Compression	402315-001	2
20		Screw, Power Supply PCB Mounting, SST, 4-40	402214-001	4
21		Label, Model/Serial Number	404525-006	1
22	A7	Power Indicator PCB	403170-008	1
23		Spring, Chassis Ground, Rear	403741-001	AR
24		Screw, FLH, 100˚, Phillips, SST, 4-40 x 3/16	4505-406	6
25		Nut, Hex, 4-40	4521-304	4
26		Screw, BDGH, Phillips, 4-40 x 3/16	45074-406	12
27		Screw, BDGH, Phillips, 4-40 x 1-3/8	45074-438	2
28		Spacer, Male/Female, 4-40 x 0.875	4656-414	2
29		Screw, 4-40 x 7/8	404069-001	2
30	A3	Non-Isolated Input PCB	401315-002	1
31		Carton, Shipping	404211-003	1
32		Foam Insert	404211-004	2
33		Screw, BDGH, Phillips, 4-40 x 5/8	45074-420	2
34		Screw, BDGH, Phillips, 4-40 x 3/4	45074-424	4
35		Washer, Pulse Oximetry Connector	4550-250	1
36	A6	Interconnect PCB	800006-001	1
37		Insulator, Bottom Shield	404188-001	1
39		Screw, BDGH, Phillips, 4-40 x 3/8	45074-412	2
43	P1, W3	Harness Assembly, SpO_2 – w/Choke	700091-004	1
44		Adhesive, Diecut, Front Right	415098-001	1
45	A9	600 Acquisition Module	417122-001	1
46		Screw, PNH, Phillips, SST, 4-40 x 3/16	4502-406	2

Item	Reference Designation	Parts List	Part Number	Qty
48		Spring, Latch	406019-001	2
49		Button, Latch	402106-001	1
51		Pin, Latch	402806-001	2
52		Pin, Latch	406037-001	2
53		Latch	401682-001	1
54		Screw, PNH, 4-40 x 0.188, Modified (Determined by Destination)	409009-001	1
54		Screw, BDGH, 4-40 x 0.188 (Determined by Destination)	45075-406	1
56		Label, Front, 600SL, English (Determined by Destination)	411175-002	1
56		Label, Front, 600SL, German (Determined by Destination)	411175-003	1
56		Label, Front, 600SL, French (Determined by Destination)	411175-004	1
56		Label, Front, 600SL, Swedish (Determined by Destination)	411175-005	1
56		Label, Front, 600SL, Spanish (Determined by Destination)	411175-006	1
56		Label, Front, 600SL, Italian (Determined by Destination)	411175-007	1
57		Label, Top, English (Determined by Destination)	411175-009	1
57		Label, Top, German (Determined by Destination)	411175-010	1
57		Label, Top, French (Determined by Destination)	411175-011	1
57		Label, Top, Swedish (Determined by Destination)	411175-012	1
57		Label, Top, Spanish (Determined by Destination)	411175-013	1
57		Label, Top, Italian (Determined by Destination)	411175-014	1
59		Label, Cover, English (Determined by Destination)	411175-016	1
59		Label, Cover, German (Determined by Destination)	411175-020	1
59		Label, Cover, French (Determined by Destination)	411175-021	1
59		Label, Cover, Swedish (Determined by Destination)	411175-022	1
59		Label, Cover, Spanish (Determined by Destination)	411175-023	1
59		Label, Cover, French (Determined by Destination)	411175-024	1
59		Label, Cover, International (Determined by Destination)	411173-025	1
60		Label, TUV (Determined by Destination)	408103-003	1
60		Label, UL (Determined by Destination)	408230-002	1
61	P1	Connector, Header, 64-Pin, w/Ferrites	409203-001	1
62		Adhesive, Diecut, Front Left	415098-002	1
76		Spring, Chassis Ground, Small	414610-001	AR
77		Adhesive, Mylar	415316-001	1
78		Label, CE Mark	408230-008	1
79		PC Post, 2 x 7	412062-004	1
80		PC Post, 2 x 11	412062-005	1

Assembly Revisions PN 411163

The baseline revision for this assembly is pn 411163-001H. To convert the parts list back to a previous revision, change all part numbers, descriptions, and quantities as indicated in the revision tables given below.

PN 411163-001B

Item	Reference Designation	Description	Revision's Part Number	Baseline Part Number	Qty
11		Label Set, Tram 600SL	411175-001	Not Used	1
12		Module Processor PCB	800210-002	800210-005	1
44		Adhesive, Loctite Prism 411	4851-082	415098-001	AR
45	A9	DAS 600 Module, 10-Lead	411168-001	417122-001	1
46		Screw, Phillips, STT, 4-40 x 3/16	Not Used	4502-406	2
61		Connector, Header 64-pin w/Ferrites	Not Used	409203-001	1
62		Adhesive, Diecut Front Left	Not Used	415098-002	1
76		Spring, Chassis Ground, Small	Not Used	414610-001	AR
77		Adhesive, Mylar	Not Used	415316-001	1
78		Label, CE Mark	Not Used	408230-008	1
79		PC Post, 2 x 7	Not Used	412062-004	1
80		PC Post, 2 x 11	Not Used	412062-005	1

PN 411163-001C

Item	Reference Designation	Description	Revision's Part Number	Baseline Part Number	Qty
12		Module Processor PCB	800210-002	800210-005	1
44		Adhesive, Loctite Prism 411	4851-082	415098-001	AR
45	A9	DAS 600 Module, 10-Lead	411168-001	417122-001	1
62		Adhesive, Diecut Front Left	Not Used	415098-002	1
76		Spring, Chassis Ground, Small	Not Used	414610-001	AR
77		Adhesive, Mylar	Not Used	415316-001	1
78		Label, CE Mark	Not Used	408230-008	1
79		PC Post, 2 x 7	Not Used	412062-004	1
80		PC Post, 2 x 11	Not Used	412062-005	1

PN 411163-001D

This revision was a documentation change that does not affect this manual.
Refer to pn 411163-001C for changes to the parts list.

PN 411163-001E

Item	Reference Designation	Description	Revision's Part Number	Baseline Part Number	Qty
12		Module Processor PCB	800210-002	800210-005	1
45	A9	DAS 600 Module, 10-Lead	411168-001	417122-001	1
76		Spring, Chassis Ground, Small	Not Used	414610-001	AR
77		Adhesive, Mylar	Not Used	415316-001	1
78		Label, CE Mark	Not Used	408230-008	1
79		PC Post, 2 x 7	Not Used	412062-004	1
80		PC Post, 2 x 11	Not Used	412062-005	1

PN 411163-001F

This revision was a documentation change that does not affect this manual.
Refer to pn 411163-001E for changes to the parts list.

PN 411163-001G

This revision was a documentation change that does not affect this manual.
Refer to pn 411163-001E for changes to the parts list.

PN 411163-001H

Item	Reference Designation	Description	Revision's Part Number	Baseline Part Number	Qty
45	A9	DAS 600 Module, 10-Lead	411168-001	417122-001	1

For your notes

14 TRAM 650SL MODULE PN 412656

General **14-2**
Circuit Boards 14-2

Exploded View PN 412656-001H **14-3**

Schematic Diagram PN 412656-001H **14-5**

Parts List PN 412656-001H **14-7**

ssembly Revisions PN 412656 ..... **14-9**

General

Circuit Boards

Details about the circuit boards contained in the Tram 650SL are discussed in later chapters arranged by part number.

Table 14-1. Circuit Board Overview

Module Type	Upper Level	Leadwire Configuration	DAS Module	Acquisition Processor PCB	Module Processor PCB
Tram 650SL	412656-001A–G	10-Leadwire	411168-001	800330-004	800210-005
Tram 650SL	412656-001H	10-Leadwire	417122-001 (Replaced 411168-001)	801040-001	800210-005

Exploded View PN 412656-001H

1 of 2

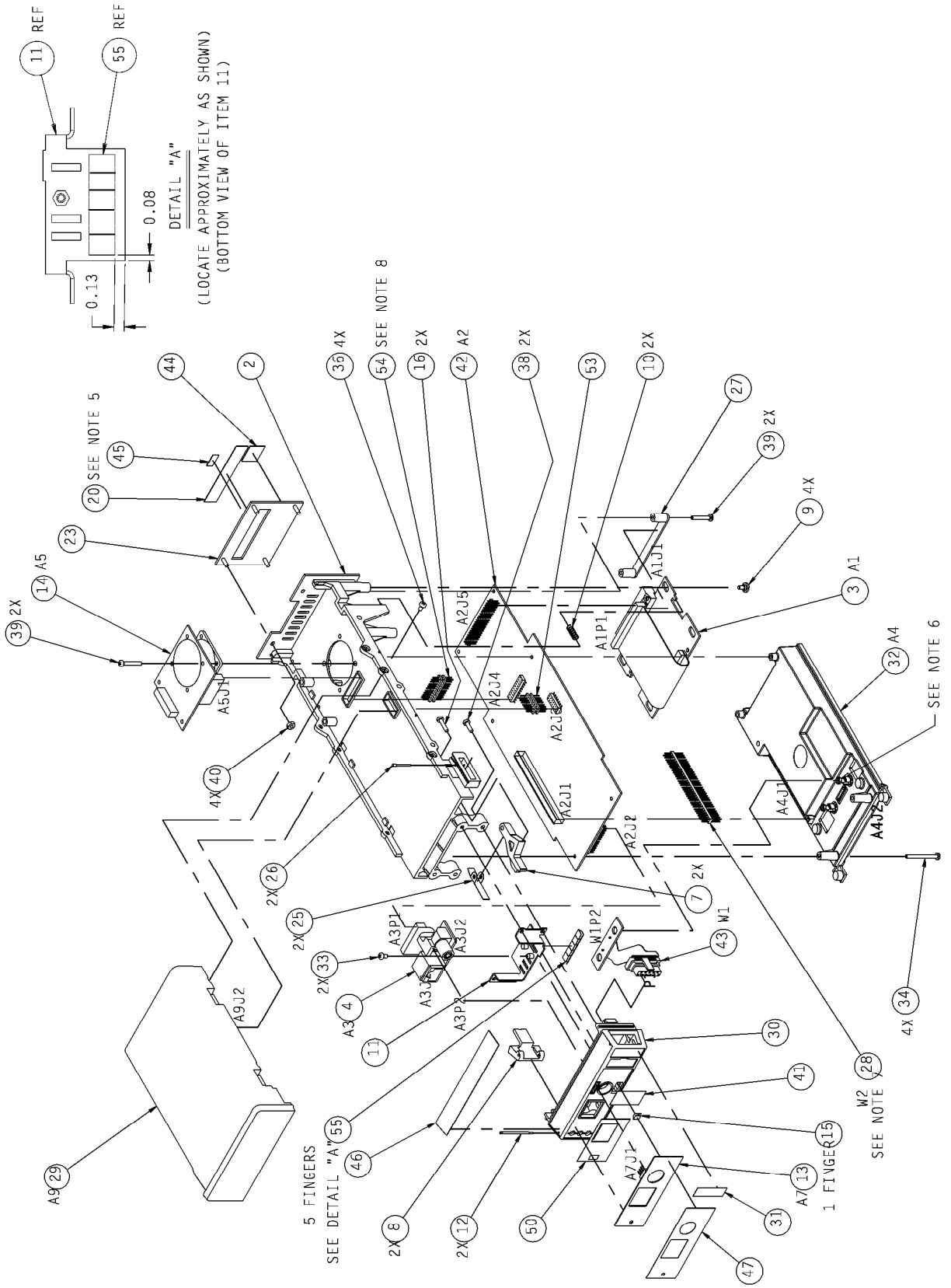

2 of 2

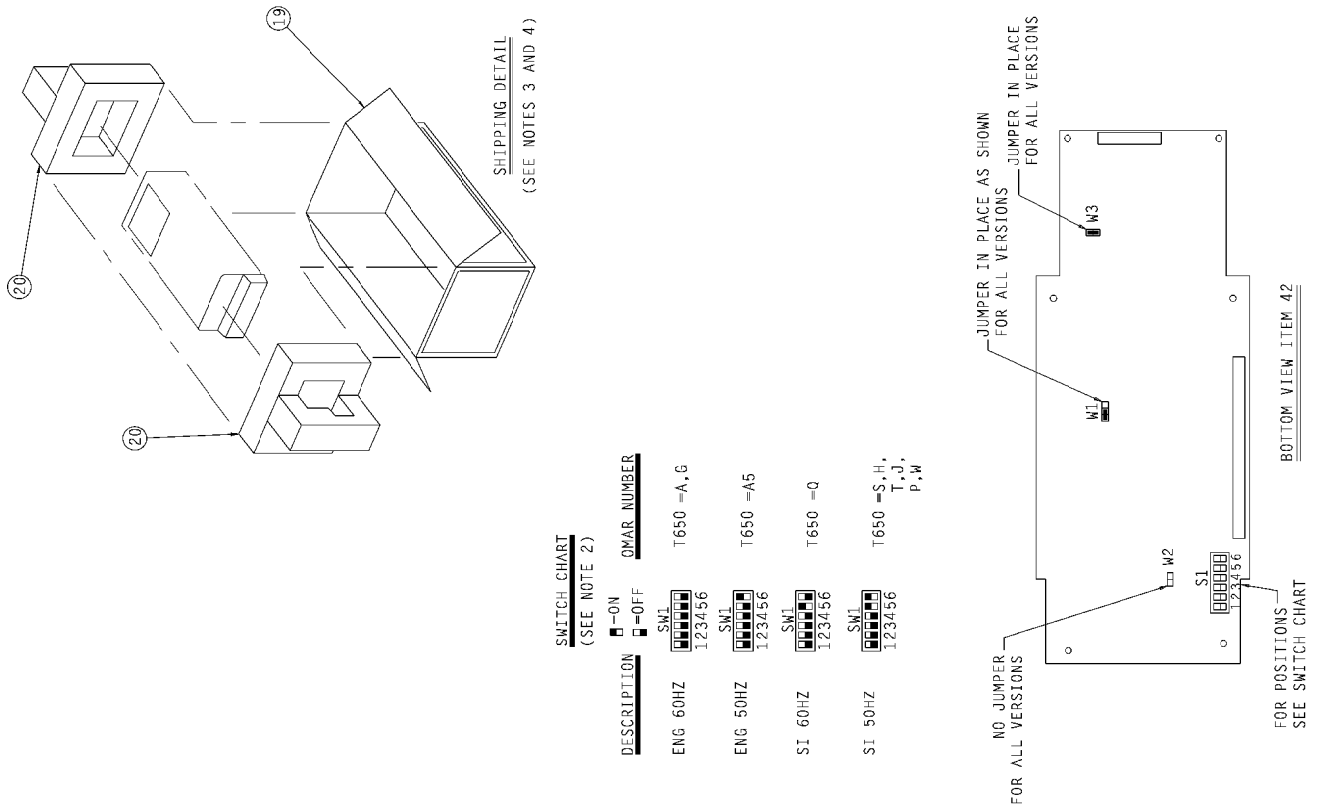

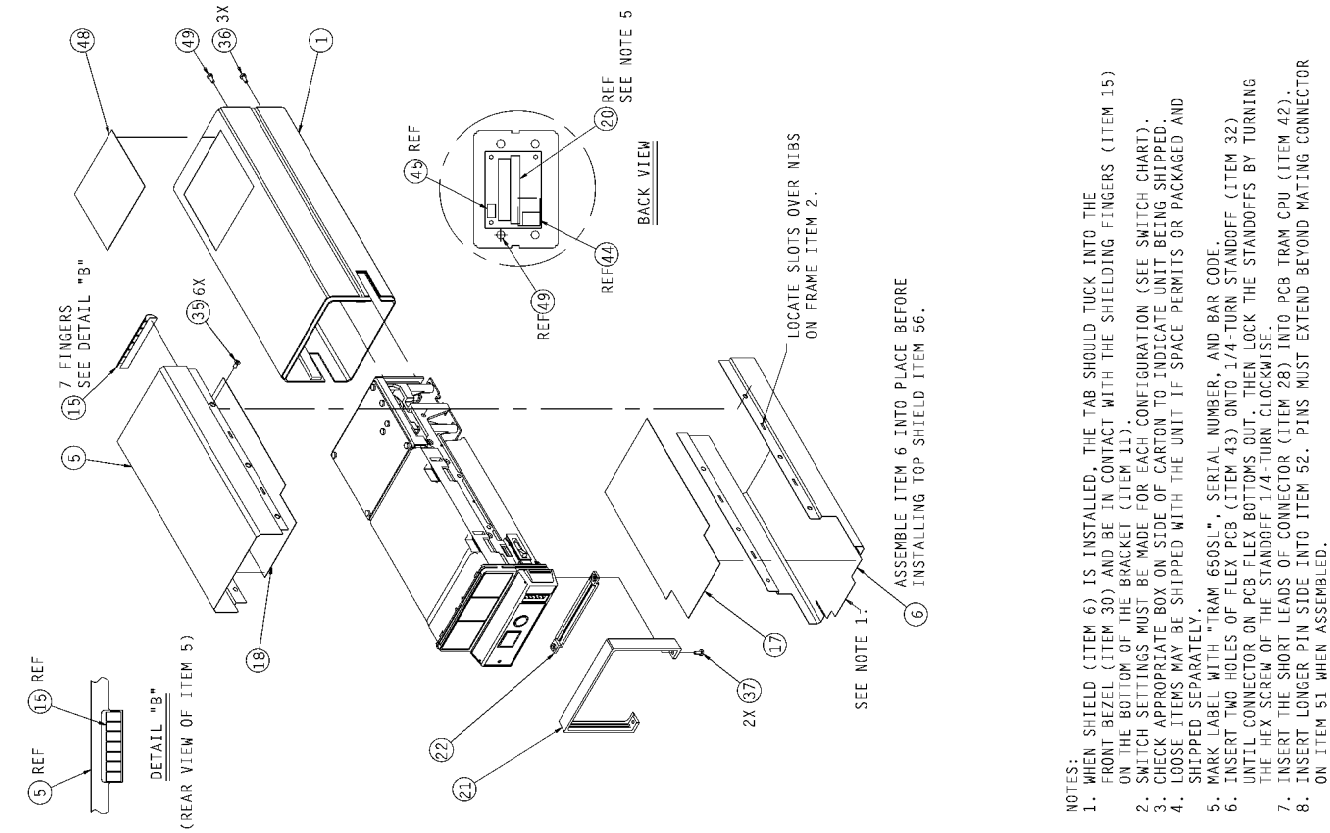

NOTES:
1. WHEN SHIELD (ITEM 6) IS INSTALLED, THE TAB SHOULD TUCK INTO THE FRONT BEZEL (ITEM 30) AND BE IN CONTACT WITH THE SHIELDING FINGERS (ITEM 15) ON THE BOTTOM OF THE BRACKET (ITEM 11).
2. SWITCH SETTINGS MUST BE MADE FOR EACH CONFIGURATION (SEE SWITCH CHART).
3. CHECK APPROPRIATE BOX ON SIDE OF CARTON TO INDICATE UNIT BEING SHIPPED.
4. LOOSE ITEMS MAY BE SHIPPED WITH THE UNIT IF SPACE PERMITS OR PACKAGED AND SHIPPED SEPARATELY.
5. MARK LABEL WITH "TRAM 650SL", SERIAL NUMBER, AND BAR CODE.
6. INSERT TWO HOLES OF FLEX PCB (ITEM 43) ONTO 1/4-TURN STANDOFF (ITEM 32) UNTIL CONNECTOR ON PCB FLEX BOTTOMS OUT. THEN LOCK THE STANDOFFS BY TURNING THE HEX SCREW OF THE STANDOFF 1/4-TURN CLOCKWISE.
7. INSERT THE SHORT LEADS OF CONNECTOR (ITEM 28) INTO PCB TRAM CPU (ITEM 42).
8. INSERT LONGER PIN SIDE INTO ITEM 52. PINS MUST EXTEND BEYOND MATING CONNECTOR ON ITEM 51 WHEN ASSEMBLED.

Schematic Diagram PN 412656-001H

1 of 2

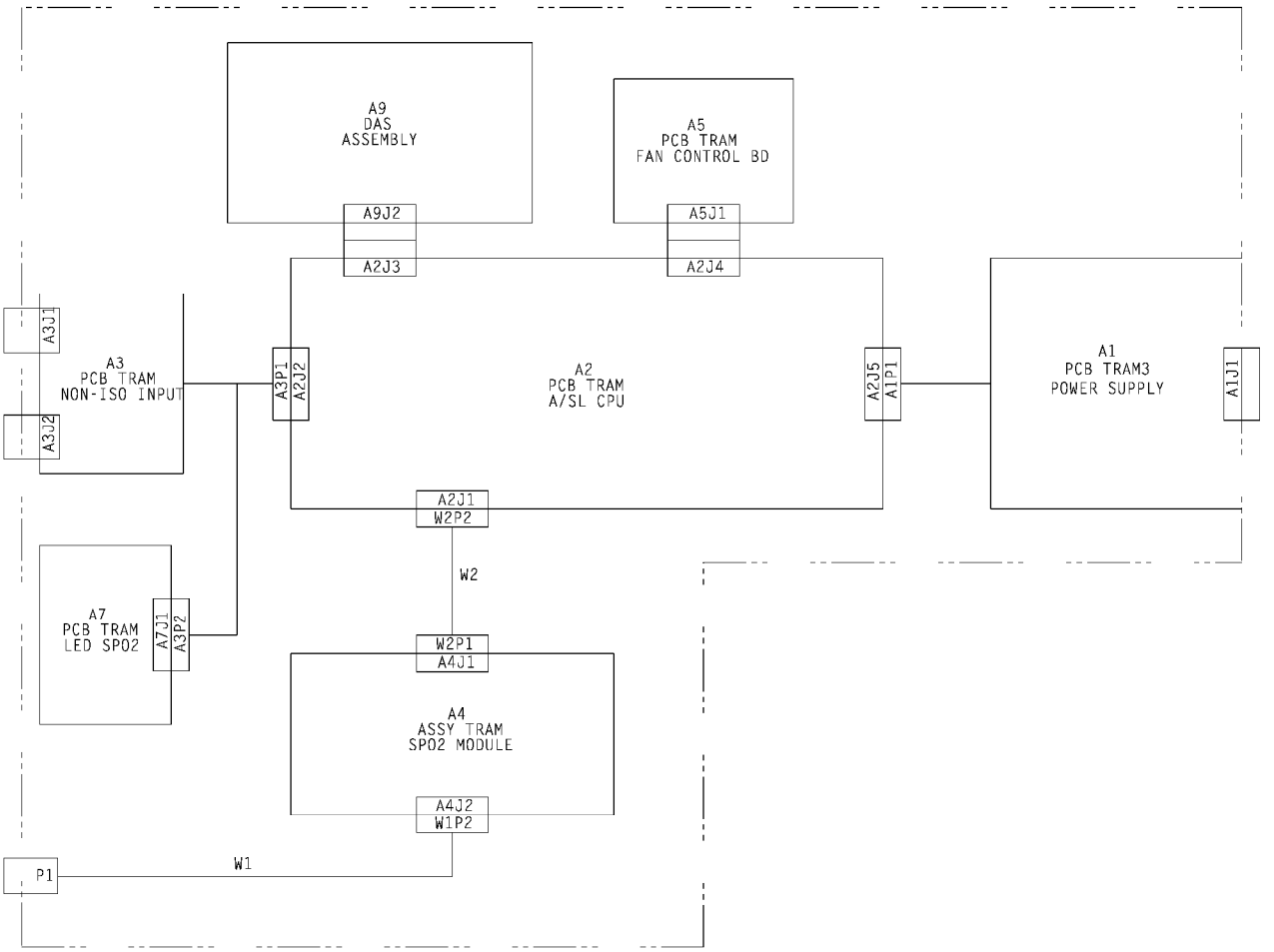

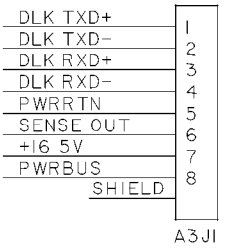

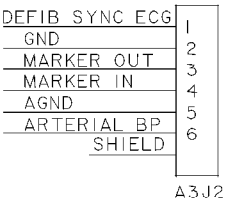

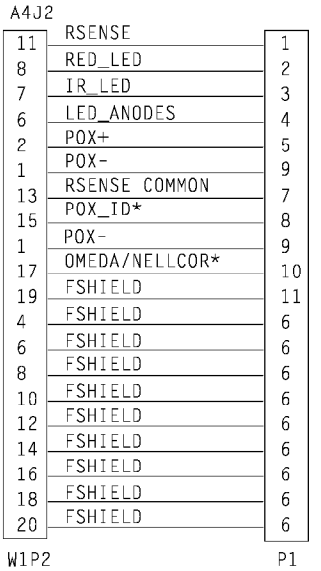

2 of 2

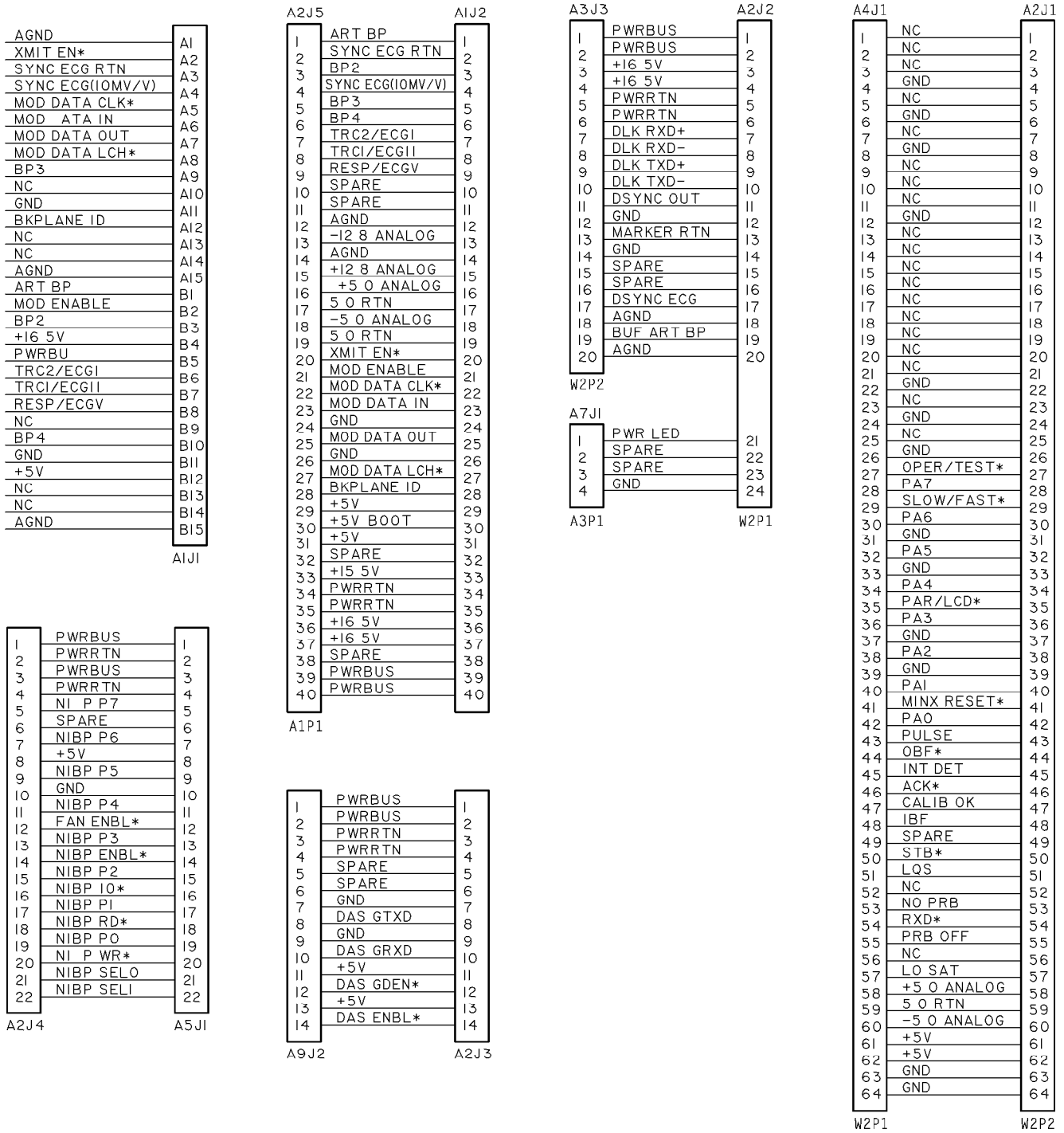
A1J1
AGND
XMIT EN*
SYNC ECG RTN
SYNC ECG(10MV/V)
MOD DATA CLK*
MOD ATA IN
MOD DATA OUT
MOD DATA LCH*
BP3
NC
GND
BKPLANE ID
NC
NC
AGND
ART BP
MOD ENABLE
BP2
+16 5V
PWRBU
TRC2/ECGI
TRCI/ECGII
RESP/ECGV
NC
BP4
GND
+5V
NC
NC
AGND
A2J5
A1J2
ART BP
SYNC ECG RTN
BP2
SYNC ECG(10MV/V)
BP3
BP4
TRC2/ECGI
TRCI/ECGII
RESP/ECGV
SPARE
SPARE
AGND
-12 8 ANALOG
AGND
+12 8 ANALOG
+5 0 ANALOG
5 0 RTN
-5 0 ANALOG
5 0 RTN
XMIT EN*
MOD ENABLE
MOD DATA CLK*
MOD DATA IN
GND
MOD DATA OUT
GND
MOD DATA LCH*
BKPLANE ID
+5V
+5V BOOT
+5V
SPARE
+15 5V
PWRRTN
PWRRTN
+16 5V
+16 5V
SPARE
PWRBUS
PWRBUS
A1P1
A3J3
A2J2
PWRBUS
PWRBUS
+16 5V
+16 5V
PWRRTN
PWRRTN
DLK RXD+
DLK RXD-
DLK TXD+
DLK TXD-
DSYNC OUT
GND
MARKER RTN
GND
SPARE
SPARE
DSYNC ECG
AGND
BUF ART BP
AGND
W2P2
A7J1
PWR LED
SPARE
SPARE
GND
A3P1
W2P1
A4J1
A2J1
NC
NC
NC
GND
NC
GND
NC
GND
NC
NC
NC
GND
NC
NC
NC
NC
NC
NC
NC
NC
NC
GND
NC
GND
NC
GND
OPER/TEST*
PA7
SLOW/FAST*
PA6
GND
PA5
GND
PA4
PAR/LCD*
PA3
GND
PA2
GND
PA1
MINX RESET*
PA0
PULSE
OBF*
INT DET
ACK*
CALIB OK
IBF
SPARE
STB*
LQS
NC
NO PRB
RXD*
PRB OFF
NC
LO SAT
+5 0 ANALOG
5 0 RTN
-5 0 ANALOG
+5V
+5V
GND
GND
W2P1
W2P2
A2J4
A5J1
PWRBUS
PWRRTN
PWRBUS
PWRRTN
NI P P7
SPARE
NIBP P6
+5V
NIBP P5
GND
NIBP P4
FAN ENBL*
NIBP P3
NIBP ENBL*
NIBP P2
NIBP 10*
NIBP P1
NIBP RD*
NIBP P0
NI P WR*
NIBP SEL0
NIBP SEL1
A9J2
A2J3
PWRBUS
PWRBUS
PWRRTN
PWRRTN
SPARE
SPARE
GND
DAS GTXD
GND
DAS GRXD
+5V
DAS GDEN*
+5V
DAS ENBL*

Parts List PN 412656-001H

Item	Reference Designation	Parts List	Part Number	Qty
1		Cover, Module	400895-001	1
2		Frame	400982-001	1
3	A1	Power Supply PCB	401309-002	1
4	A3	Non-Isolated Input PCB	401315-002	1
5		Shield, Top	401679-001	1
6		Shield, Bottom	401679-002	1
7		Latch	401682-001	2
8		Button, Latch	402106-001	2
9		Screw, Shoulder	402214-001	4
10		Spring, Compression	402315-001	2
11		Plate, Chassis Ground, Bottom/Front	402317-001	1
12		Pin, Latch	402806-001	2
13	A7	Power Indicator PCB	403170-011	1
14	A5	Fan PCB	403549-002	1
15		Spring, Chassis Ground, Rear	403741-001	AR
16		Screw, BDGH, Phillips, 4-40 x 7/8	404069-001	2
17		Insulator, Bottom Shield	404188-001	2
18		Carton, Shipping	404211-003	1
19		Foam, Insert	404211-004	1
20		Label, Blank	404525-006	1
21		Trim, Rubber, Front Bezel	404620-001	1
22		Mounting Strap, Trim	404621-001	1
23		Plate, Chassis Ground, Rear	404680-002	1
25		Spring, Latch	406019-001	2
26		Pin, Latch	406037-001	2
27		Bracket, Power Supply PCB	406254-001	1
28	W2	Connector, Header, Dual, 64-Pin	407452-002	1
29	A9	600 Acquisition Module, 10-Lead	417122-001	1
30		Front Bezel, Tram	412659-001	1
31		Label, Pulse Oximetry, Nellcor (Determined by Destination)	413831-002	1
32	A4	Pulse Oximetry Assembly (Including Pulse Oximetry PCB, PN 800674-00X)	414409-001	1
33		Screw, BDGH, Phillips, 4-40 x 3/16	4502-406	2
34		Screw, BDGH, Phillips, 4-40 x 1-1/4	4502-440	4
35		Screw, FLH, 100˚, Phillips, SST, 4-40 x 3/16	4505-406	6
36		Screw, BDGH, Phillips, 4-40 x 3/16	45074-406	16
37		Screw, BDGH, Phillips, 4-40 x 3/8	45074-412	2
38		Screw, BDGH, Phillips, 4-40 x 5/8	45074-420	2
39		Screw, BDGH, Phillips, 4-40 x 3/4	45074-424	4
40		Nut, Hex, 4-40	4521-304	2

Item	Reference Designation	Parts List	Part Number	Qty
41		Adhesive, Diecut, Front Right	415098-001	1
42	A2	Module Processor PCB	800210-005	1
43	W1	Harness, Pulse Oximetry PCB-to-Connector	800892-001	1
44		Label, UL (Determined by Destination)	408230-002	1
45		Label, 60 Hertz	411091-018	1
45		Label, 50 Hertz	411091-019	1
46		Label, Top, English (Determined by Destination)	411175-009	1
46		Label, Top, German (Determined by Destination)	411175-010	1
46		Label, Top, French (Determined by Destination)	411175-011	1
46		Label, Top, Swedish (Determined by Destination)	411175-012	1
46		Label, Top, Spanish (Determined by Destination)	411175-013	1
46		Label, Top, Italian (Determined by Destination)	411175-014	1
46		Label, Top, Dutch (Determined by Destination)	411175-015	1
47		Label, Front, 650SL, English (Determined by Destination)	413840-001	1
47		Label, Front, 650SL, German (Determined by Destination)	413840-002	1
47		Label, Front, 650SL, French (Determined by Destination)	413840-003	1
47		Label, Front, 650SL, Swedish (Determined by Destination)	413840-004	1
47		Label, Front, 650SL, Spanish (Determined by Destination)	413840-005	1
47		Label, Front, 650SL, Italian (Determined by Destination)	413840-006	1
47		Label, Front, 650SL, Dutch (Determined by Destination)	413840-007	1
48		Label, Cover, English (Determined by Destination)	414050-001	1
48		Label, Cover, German (Determined by Destination)	414050-002	1
48		Label, Cover, French (Determined by Destination)	414050-003	1
48		Label, Cover, Swedish (Determined by Destination)	414050-004	1
48		Label, Cover, Spanish (Determined by Destination)	414050-005	1
48		Label, Cover, Italian (Determined by Destination)	414050-006	1
48		Label, Cover, International (Determined by Destination)	414050-007	1
49		Scew, PHD, 4-40 x 0.188, Modified (Determined by Destination)	409009-001	1
49		Scew, PHD, 4-40 x 0.188, Determined by Destination)	45074-406	1
50		Adhesive, Diecut, Front Left	415098-002	1
51		Tram 100 - 850 A & SL Module Service Manaul	404422-065	1
52		Label, CE Mark	408230-008	1
53		PC Post, 2 x 7	412062-004	1
54		PC Post, 2 x 11	412062-005	1
55		Spring, Chassis Ground, Small	414610-001	AR

Assembly Revisions PN 412656

The baseline revision for this assembly is pn 412656-001H. To convert the parts list back to a previous revision, change all part numbers, descriptions, and quantities as indicated in the revision tables given below.

PN 412656-001A

Item	Reference Designation	Description	Revision's Part Number	Baseline Part Number	Qty
41		Adhesive, Loctite Prism 411	4851-082	415098-001	AR
42		Module Processor PCB	800210-002	800210-005	1
49		Spring, Chassis Ground, Small	Not Used	414610-001	AR
50		Adhesive, Diecut Front Left	Not Used	415098-002	1
52		Label, CE Mark	Not Used	408230-008	1
53		PC Post, 2 x 7	Not Used	412062-004	1
54		PC Post, 2 x 11	Not Used	412062-005	1

PN 412656-001B

This revision was a documentation change that does not affect this manual.
Refer to pn 412656-001A for changes to the parts list.

PN 412656-001C

Item	Reference Designation	Description	Revision's Part Number	Baseline Part Number	Qty
42		Module Processor PCB	800210-002	800210-005	1
52		Label, CE Mark	Not Used	408230-008	1
53		PC Post, 2 x 7	Not Used	412062-004	1
54		PC Post, 2 x 11	Not Used	412062-005	1

PN 412656-001D

This revision was a documentation change that does not affect this manual.
Refer to pn 412656-001C for changes to the parts list.

PN 412656-001E

This revision was a documentation change that does not affect this manual.
Refer to pn 412656-001C for changes to the parts list.

PN 412656-001F

This revision was a documentation change that does not affect this manual.
Refer to pn 412656-001C for changes to the parts list.

PN 412656-001G

Item	Reference Designation	Description	Revision's Part Number	Baseline Part Number	Qty
29	A9	DAS 600 Module, 10-Lead	411168-001	417122-001	1

15 TRAM 800A/SL MODULE PN 411080/411024

General **15-2**
Circuit Boards 15-2

Exploded View PN 411080-001J **15-3**

Schematic Diagram PN 411080-001J **15-5**

Parts List PN 411080-001J **15-7**

Assembly Revisions PN411080 ..... **15-10**

Exploded View PN 411024-001J **15-12**

Schematic Diagram PN 411024-001J **15-14**

Parts List PN 411024-001J **15-16**

Assembly Revisions PN 411024 ..... **15-19**

General

Circuit Boards

Details about the circuit boards contained in the Tram 800A/SL are discussed in later chapters arranged by part number.

Table 15-1. Circuit Board Overview

Module Type	Upper Level	Leadwire Configuration	DAS Module	Acquisition Processor PCB	Module Processor PCB
Tram 800A	411080-001A–H	5-Leadwire	411068-001	800330-011	800210-005
Tram 800A	411080-001J	5-Leadwire	417124-001 (Replaced 411068-001)	801040-002	800210-005
Tram 800SL	411024-001A–H	10-Leadwire	411025-001	800330-012	800210-005
Tram 800SL	411024-001J	10-Leadwire	417123-001 (Replaced 411025-001)	801040-001	800210-005

Exploded View

PN 411080-001J

1 of 2

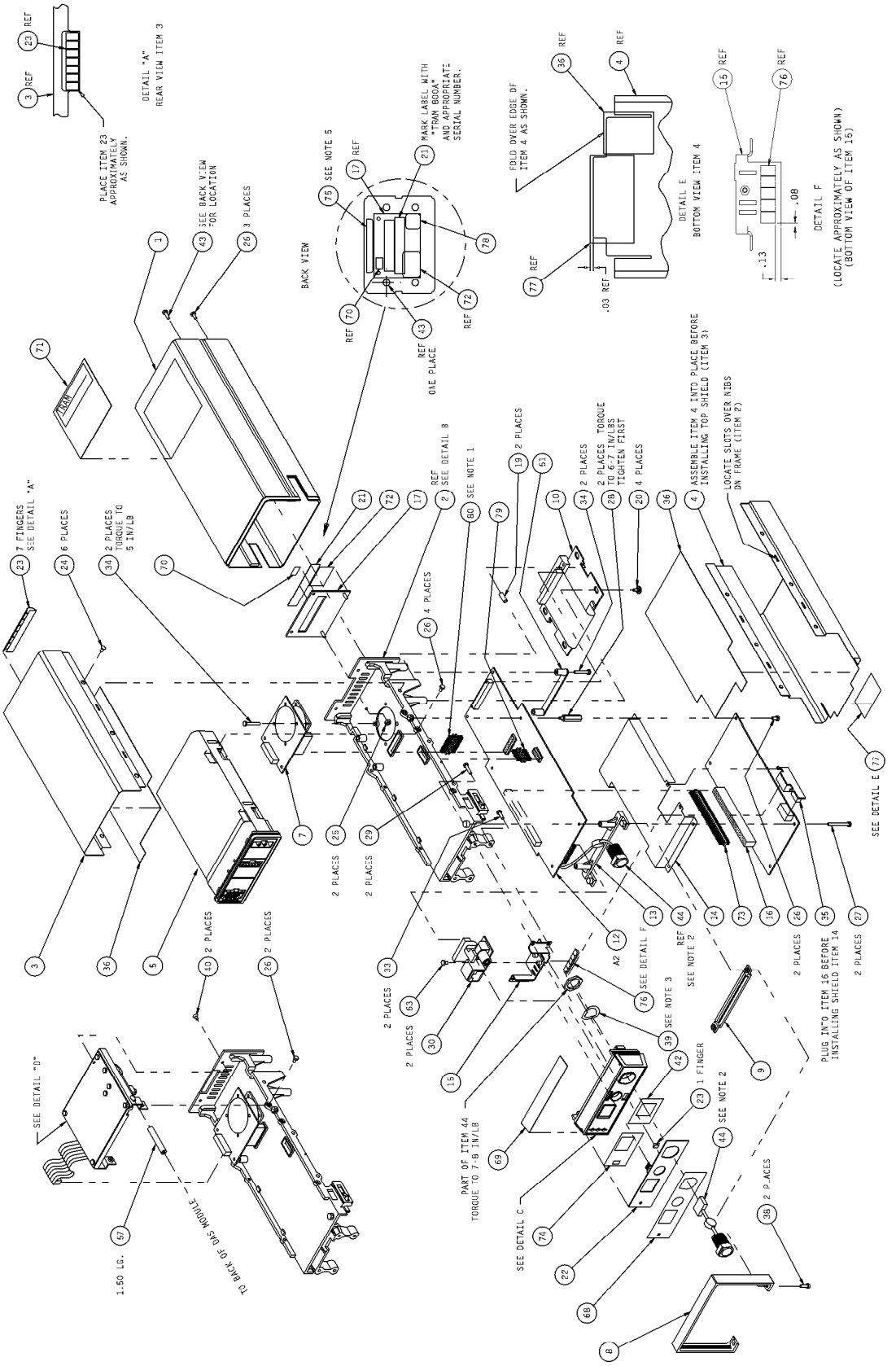

2 of 2

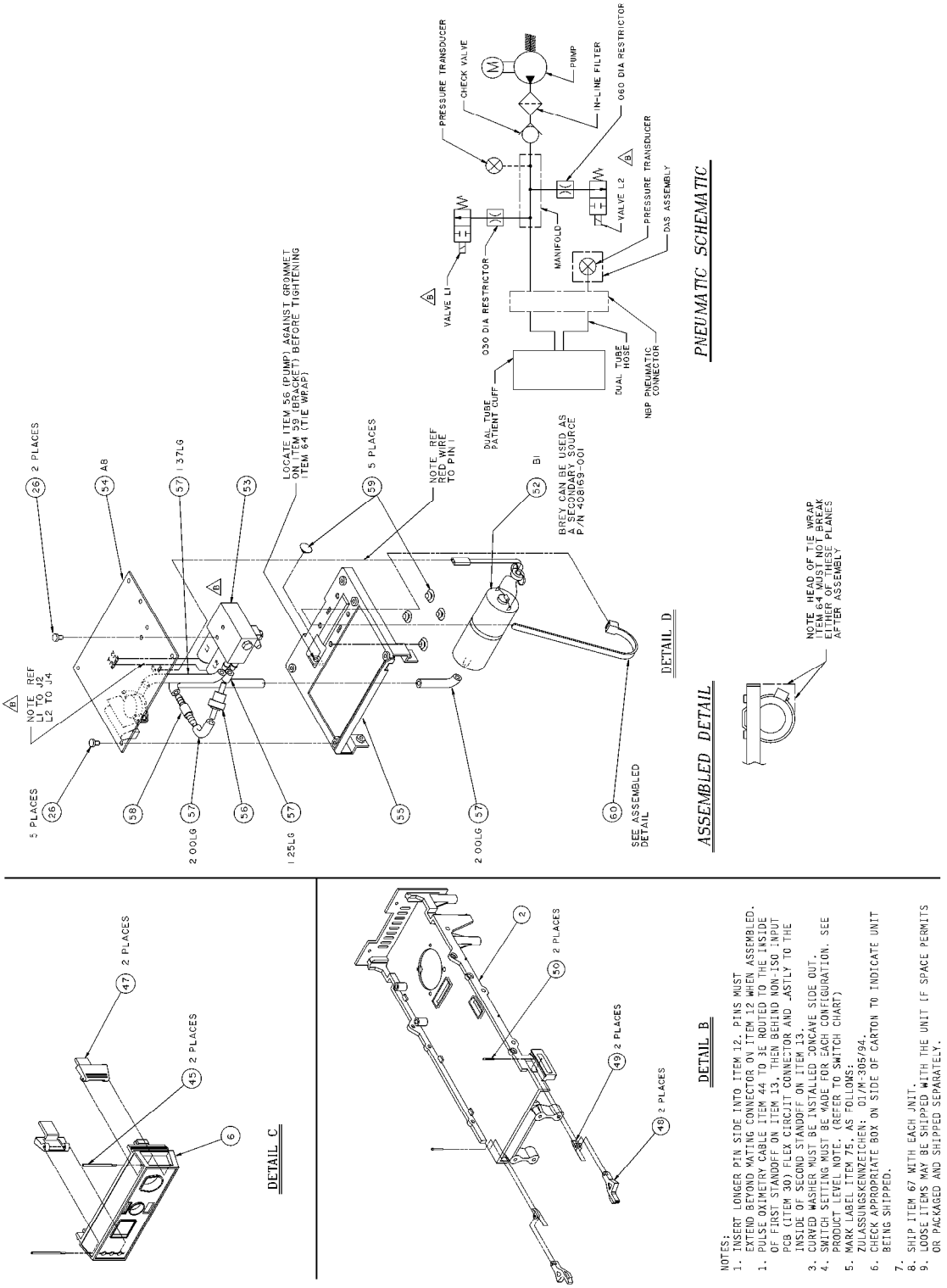
PNEUMATIC SCHEMATIC
PRESSURE TRANSDUCER
CHECK VALVE
PUMP
IN-LINE FILTER
060 DIA RESTRICTOR
VALVE L1
030 DIA RESTRICTOR
MANIFOLD
VALVE L2
PRESSURE TRANSDUCER
DAS ASSEMBLY
DUAL TUBE PATIENT CUFF
DUAL TUBE HOSE
NBP PNEUMATIC CONNECTOR
ASSEMBLED DETAIL
DETAIL D
DETAIL C
DETAIL B
NOTE REF L1 TO J2 L2 TO J4
5 PLACES
2 PLACES
LOCATE ITEM 56 (PUMP) AGAINST GROMMET ON ITEM 59 (BRACKET) BEFORE TIGHTENING ITEM 64 (TIE WRAP)
NOTE REF RED WIRE TO PIN 1
BREY CAN BE USED AS A SECONDARY SOURCE P/N 408169-001
SEE ASSEMBLED DETAIL
NOTE HEAD OF TIE WRAP ITEM 64 MUST NOT BREAK EITHER OF THESE PLANES AFTER ASSEMBLY
NOTES:
1. INSERT LONGER PIN SIDE INTO ITEM 12. PINS MUST EXTEND BEYOND MATING CONNECTOR ON ITEM 12 WHEN ASSEMBLED.
1. PULSE OXIMETRY CABLE ITEM 44 TO BE ROUTED TO THE INSIDE OF FIRST STANDOFF ON ITEM 13, THEN BEHIND NON-ISO INPUT PCB (ITEM 30) FLEX CIRCUIT CONNECTOR AND LASTLY TO THE INSIDE OF SECOND STANDOFF ON ITEM 13.
3. CURVED WASHER MUST BE INSTALLED CONCAVE SIDE OUT.
4. SWITCH SETTING MUST BE MADE FOR EACH CONFIGURATION. SEE PRODUCT LEVEL NOTE. (REFER TO SWITCH CHART)
5. MARK LABEL ITEM 75, AS FOLLOWS:
ZULASSUNGSKENNZEICHEN: 01/M-305/94.
6. CHECK APPROPRIATE BOX ON SIDE OF CARTON TO INDICATE UNIT BEING SHIPPED.
7.
8. SHIP ITEM 67 WITH EACH UNIT.
9. LOOSE ITEMS MAY BE SHIPPED WITH THE UNIT IF SPACE PERMITS OR PACKAGED AND SHIPPED SEPARATELY.

Schematic Diagram PN 411080-001J

1 of 2

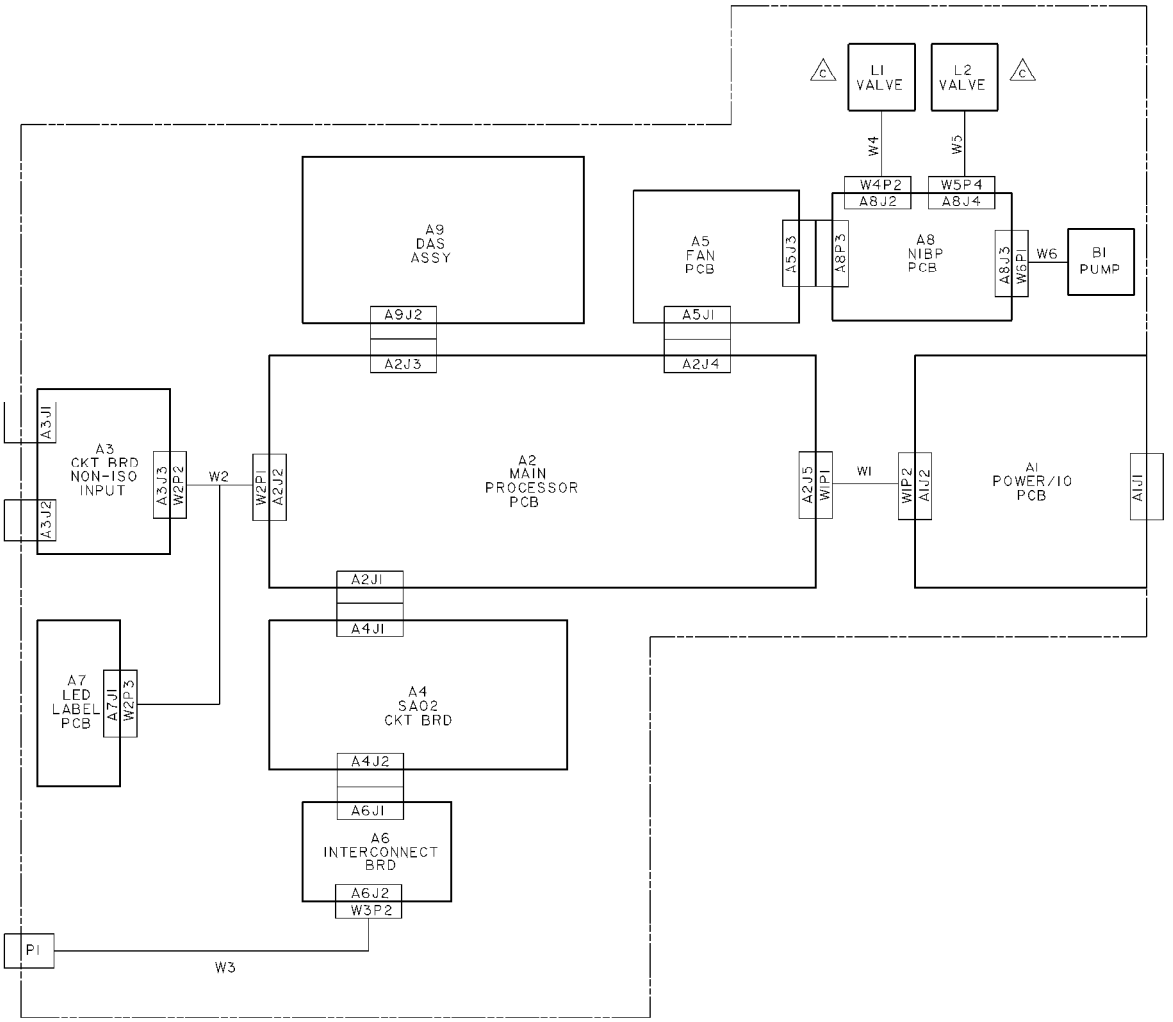

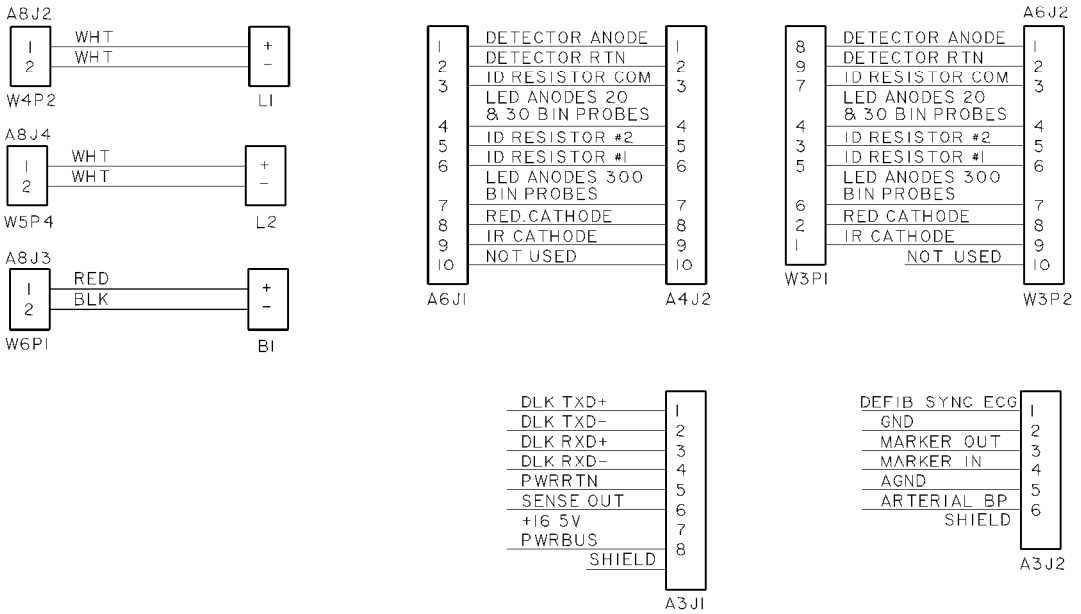

2 of 2

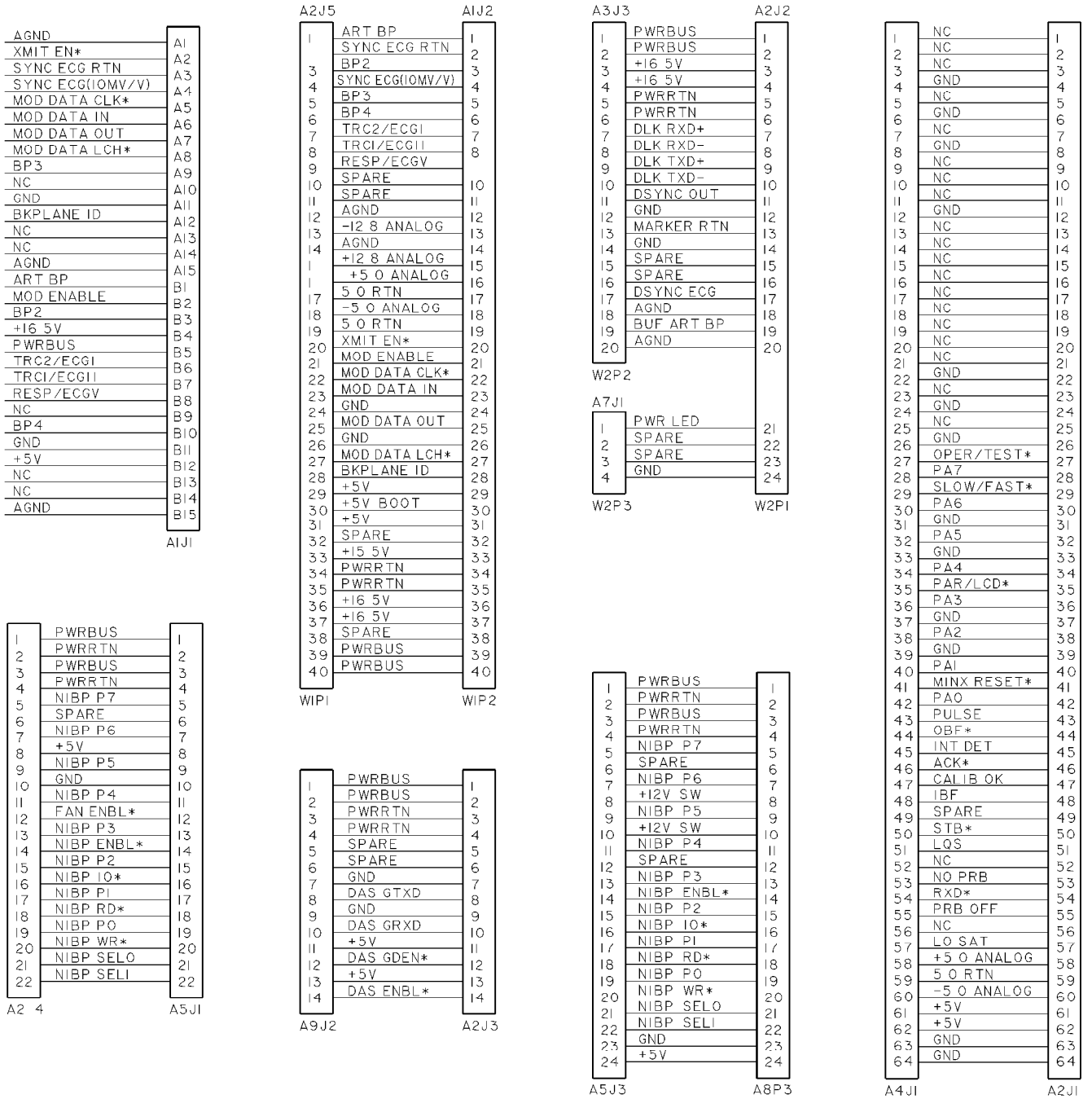
A1J1
AGND
XMIT EN*
SYNC ECG RTN
SYNC ECG(10MV/V)
MOD DATA CLK*
MOD DATA IN
MOD DATA OUT
MOD DATA LCH*
BP3
NC
GND
BKPLANE ID
NC
NC
AGND
ART BP
MOD ENABLE
BP2
+16 5V
PWRBUS
TRC2/ECG1
TRC1/ECG11
RESP/ECGV
NC
BP4
GND
+5V
NC
NC
AGND
A2J5
WIP1
ART BP
SYNC ECG RTN
BP2
SYNC ECG(10MV/V)
BP3
BP4
TRC2/ECG1
TRC1/ECG11
RESP/ECGV
SPARE
SPARE
AGND
-12 8 ANALOG
AGND
+12 8 ANALOG
+5 0 ANALOG
5 0 RTN
-5 0 ANALOG
5 0 RTN
XMIT EN*
MOD ENABLE
MOD DATA CLK*
MOD DATA IN
GND
MOD DATA OUT
GND
MOD DATA LCH*
BKPLANE ID
+5V
+5V BOOT
+5V
SPARE
+15 5V
PWRRTN
PWRRTN
+16 5V
+16 5V
SPARE
PWRBUS
PWRBUS
PWRBUS
A1J2
WIP2
A3J3
W2P2
PWRBUS
PWRBUS
+16 5V
+16 5V
PWRRTN
PWRRTN
DLK RXD+
DLK RXD-
DLK TXD+
DLK TXD-
DSYNC OUT
GND
MARKER RTN
GND
SPARE
SPARE
DSYNC ECG
AGND
BUF ART BP
AGND
A2J2
A7J1
W2P3
PWR LED
SPARE
SPARE
GND
W2P1
A2 4
PWRBUS
PWRRTN
PWRBUS
PWRRTN
NIBP P7
SPARE
NIBP P6
+5V
NIBP P5
GND
NIBP P4
FAN ENBL*
NIBP P3
NIBP ENBL*
NIBP P2
NIBP 10*
NIBP P1
NIBP RD*
NIBP P0
NIBP WR*
NIBP SELO
NIBP SELI
A5J1
A9J2
PWRBUS
PWRBUS
PWRRTN
PWRRTN
SPARE
SPARE
GND
DAS GTXD
GND
DAS GRXD
+5V
DAS GDEN*
+5V
DAS ENBL*
A2J3
A5J3
PWRBUS
PWRRTN
PWRBUS
PWRRTN
NIBP P7
SPARE
NIBP P6
+12V SW
NIBP P5
+12V SW
NIBP P4
SPARE
NIBP P3
NIBP ENBL*
NIBP P2
NIBP 10*
NIBP P1
NIBP RD*
NIBP P0
NIBP WR*
NIBP SELO
NIBP SELI
GND
+5V
A8P3
A4J1
NC
NC
NC
GND
NC
GND
NC
GND
NC
NC
NC
GND
NC
NC
NC
NC
NC
NC
NC
NC
NC
GND
NC
GND
NC
GND
OPER/TEST*
PA7
SLOW/FAST*
PA6
GND
PA5
GND
PA4
PAR/LCD*
PA3
GND
PA2
GND
PA1
MINX RESET*
PA0
PULSE
OBF*
INT DET
ACK*
CALIB OK
IBF
SPARE
STB*
LQS
NC
NO PRB
RXD*
PRB OFF
NC
LO SAT
+5 0 ANALOG
5 0 RTN
-5 0 ANALOG
+5V
+5V
GND
GND
A2J1

Parts List PN 411080-001J

Item	Reference Designation	Parts List	Part Number	Qty
1		Cover, Module	400895-001	1
2		Frame	400982-001	1
3		Shield, Top	401679-001	1
4		Shield, Bottom	401679-002	1
5	A9	800 Acquisition Module, 5-Lead	417124-001	1
6		Front Bezel, Lower	401105-004	1
7	A5	Fan PCB	403549-002	1
8		Trim, Rubber, Front Bezel	404620-001	1
9		Mounting Strap, Trim	404621-001	1
10	A1	Power Supply PCB	401309-002	1
12	A2	Module Processor PCB	800210-005	1
13		Circuit Board/Bezel Mount	404762-001	1
14		Shield, Pulse Oximetry PCB	401680-001	1
15		Plate, Chassis Ground, Bottom/Front	402317-001	1
16	A4	Pulse Oximetry PCB	401189-001	1
17		Plate, Chassis Ground, Rear	404680-002	1
19		Spring, Compression	402315-001	2
20		Screw, Power Supply PCB Mounting, SST, 4-40	402214-001	4
21		Label, Model/Serial Number	404525-006	1
22	A7	Power Indicator PCB	403170-008	1
23		Spring, Chassis Ground, Rear	403741-001	AR
24		Screw, FLH, 100˚, Phillips, SST, 4-40 x 3/16	4505-406	6
25		Nut, Hex, 4-40	4521-304	2
26		Screw, BDGH, Phillips, 4-40 x 3/16	45074-406	18
27		Screw, BDGH, Phillips, 4-40 x 1-3/8	45074-438	2
28		Spacer, Male/Female, 4-40 x 0.875	4656-414	2
29		Screw, 4-40 x 7/8	404069-001	2
30	A3	Non-Isolated Input PCB	401315-002	1
31		Carton, Shipping	404211-003	1
32		Foam Insert	404211-004	2
33		Screw, BDGH, Phillips, 4-40 x 5/8	45074-420	2
34		Screw, BDGH, Phillips, 4-40 x 3/4	45074-424	4
35	A6	Interconnect PCB	800006-001	1
36		Insulator, Bottom Shield	404188-001	2
38		Screw, BDGH, Phillips, 4-40 x 3/8	45074-412	2
39		Washer, Pulse Oximetry Connector	4550-250	1
40		Screw, FLH, Phillips, SST, 4-40 x 3/8	4505-412	2
41		Tram 100 - 850 A and SL Modules Service Manual	404422-065	1
42		Adhesive, Diecut, Front Right	415098-001	1
43		Screw, PHD, 4-40 x 0.188, Modified (Determined by Destination)	409009-001	1

Item	Reference Designation	Parts List	Part Number	Qty
43		Screw, PHD, 4-40 x 0.188, (Determined by Destination)	45074-406	1
44	W3	Harness Assembly, SpO2 – w/Choke	700091-004	1
45		Pin, Latch	402806-001	2
46		Spring, Flat, SST	405041-001	2
47		Button, Latch	402106-001	1
48		Latch	401682-001	1
49		Spring, Latch	406019-001	2
50		Pin, Latch	406037-001	2
51		Bracket, Power Supply PCB	406254-001	1
52	B1	Pump Assembly, NBP, w/Harness	408169-002	1
53	A10	NBP Valve Assembly	416153-001	1
54	A8	NBP PCB	800316-002	1
55		Bracket, NBP Mounting	404296-001	1
56		Check Valve, 0.125 ID	404675-001	1
57		Tubing, Silastic	401582-001	AR
58		Filter, 43 Micron	404679-001	1
59		Grommet, 1/4 Dia, 1/8 High, 1/16 Panel Thickness	404749-001	5
60		Tie Wrap	4535-002	1
63		Screw, PNH, Phillips, SST, 4-40 x 3/16	4502-406	2
67		SpO2 Sensor, Adult, Finger, Package of 6	411667-001	1
68		Label, Front, 800SL, English (Determined by Destination)	411043-002	1
68		Label, Front, 800A, German (Determined by Destination)	411043-003	1
68		Label, Front, 800A, French (Determined by Destination)	411043-004	1
68		Label, Front, 800A, Swedish (Determined by Destination)	411043-005	1
68		Label, Front, 800A, Spanish (Determined by Destination)	411043-006	1
68		Label, Front, 800A, Italian (Determined by Destination)	411043-007	1
68		Label, Front, 800A, Dutch (Determined by Destination)	411043-008	1
69		Label, Top, English (Determined by Destination)	411091-009	1
69		Label, Top, German (Determined by Destination)	411091-010	1
69		Label, Top, French (Determined by Destination)	411091-011	1
69		Label, Top, Swedish (Determined by Destination)	411091-012	1
69		Label, Top, Spanish (Determined by Destination)	411091-013	1
69		Label, Top, Italian (Determined by Destination)	411091-014	1
69		Label, Top, Dutch (Determined by Destination)	411091-015	1
70		Label, 60 Hertz (Determined by Destination)	411091-018	1
70		Label, 50 Hertz (Determined by Destination)	411091-019	1
71		Label, Cover, English (Determined by Destination)	411043-016	1

Item	Reference Designation	Parts List	Part Number	Qty
71		Label, Cover, German (Determined by Destination)	411043-020	1
71		Label, Cover, French (Determined by Destination)	411043-021	1
71		Label, Cover, Swedish (Determined by Destination)	411043-022	1
71		Label, Cover, Spanish (Determined by Destination)	411043-023	1
71		Label, Cover, Italian (Determined by Destination)	411043-024	1
71		Label, Cover, International (Determined by Destination)	411043-025	1
72		Label, TUV (Determined by Destination)	408103-003	1
72		Label, UL Listed (Determined by Destination)	408230-002	1
73	P1	Connector, Header, 64-Pin, w/Ferrites	409203-001	1
74		Adhesive, Diecut, Front Left	415098-002	1
76		Spring, Chassis Ground, Small	414610-001	AR
77		Adhesive, Mylar	415316-001	1
78		Label, CE Mark	408230-008	1
79		PC Post, 2 x 7	412062-004	1
80		PC Post, 2 x 11	412062-005	1

Assembly Revisions PN 411080

The baseline revision for this assembly is pn 411080-001J. To convert the parts list back to a previous revision, change all part numbers, descriptions, and quantities as indicated in the revision tables given below.

PN 411080-001C

Item	Reference Designation	Description	Revision's Part Number	Baseline Part Number	Qty
5	A9	DAS 800A Module, 10-Lead	411068-001	417124-001	1
11		Label Set, Tram 800A	411043-001	Not Used	1
12		Module Processor PCB	800210-002	800210-005	1
42		Adhesive, Loctite Prism 411	4851-082	415098-001	AR
53	A6	NBP Valve Assembly	413021-001	416153-001	1
54	A8	NBP PCB	800316-001	800316-002	1
63		Screw, Phillips, STT, 4-40 x 3/16	Not Used	4502-406	2
73		Connector, Header 64-pin w/Ferrites	Not Used	409203-001	1
74		Adhesive, Diecut Front Left	Not Used	415098-002	1
76		Spring, Chassis Ground, Small	Not Used	414610-001	AR
77		Adhesive, Mylar	Not Used	415316-001	1
78		Label, CE Mark	Not Used	408230-008	1
79		PC Post, 2 x 7	Not Used	412062-004	1
80		PC Post, 2 x 11	Not Used	412062-005	1

PN 411080-001D

Item	Reference Designation	Description	Revision's Part Number	Baseline Part Number	Qty
5	A9	DAS 800A Module, 10-Lead	411068-001	417124-001	1
12		Module Processor PCB	800210-002	800210-005	1
42		Adhesive, Loctite Prism 411	4851-082	415098-001	AR
53	A6	NBP Valve Assembly	413021-001	416153-001	1
54	A8	NBP PCB	800316-001	800316-002	1
74		Adhesive, Diecut Front Left	Not Used	415098-002	1
76		Spring, Chassis Ground, Small	Not Used	414610-001	AR
77		Adhesive, Mylar	Not Used	415316-001	1
78		Label, CE Mark	Not Used	408230-008	1
79		PC Post, 2 x 7	Not Used	412062-004	1
80		PC Post, 2 x 11	Not Used	412062-005	1

PN 411080-001E

This revision was a documentation change that does not affect this manual.
Refer to pn 411080-001D for changes to the parts list.

PN 411080-001F

Item	Reference Designation	Description	Revision's Part Number	Baseline Part Number	Qty
5	A9	DAS 800A Module, 10-Lead	411068-001	417124-001	1
12		Module Processor PCB	800210-002	800210-005	1
53	A6	NBP Valve Assembly	413021-001	416153-001	1
54	A8	NBP PCB	800316-001	800316-002	1
76		Spring, Chassis Ground, Small	Not Used	414610-001	AR
77		Adhesive, Mylar	Not Used	415316-001	1
78		Label, CE Mark	Not Used	408230-008	1
79		PC Post, 2 x 7	Not Used	412062-004	1
80		PC Post, 2 x 11	Not Used	412062-005	1

PN 411080-001G

This revision was a documentation change that does not affect this manual.
Refer to pn 411080-001F for changes to the parts list.

PN 411080-001H

Item	Reference Designation	Description	Revision's Part Number	Baseline Part Number	Qty
5	A9	DAS 800A Module, 10-Lead	411068-001	417124-001	1
53	A6	NBP Valve Assembly	413021-001	416153-001	1
54	A8	NBP PCB	800316-001	800316-002	1

Exploded View

PN 411024-001J

1 of 2

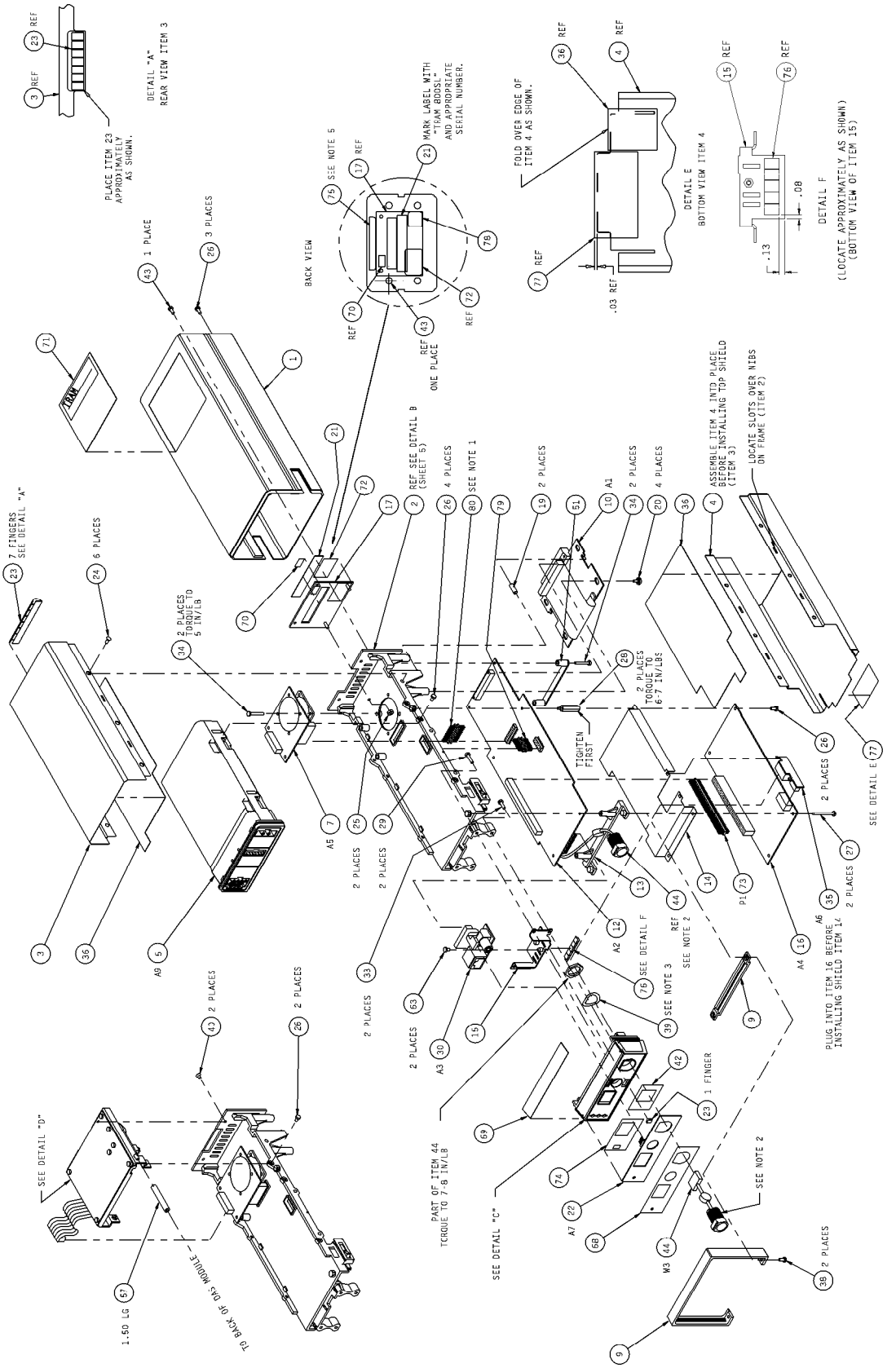

2 of 2

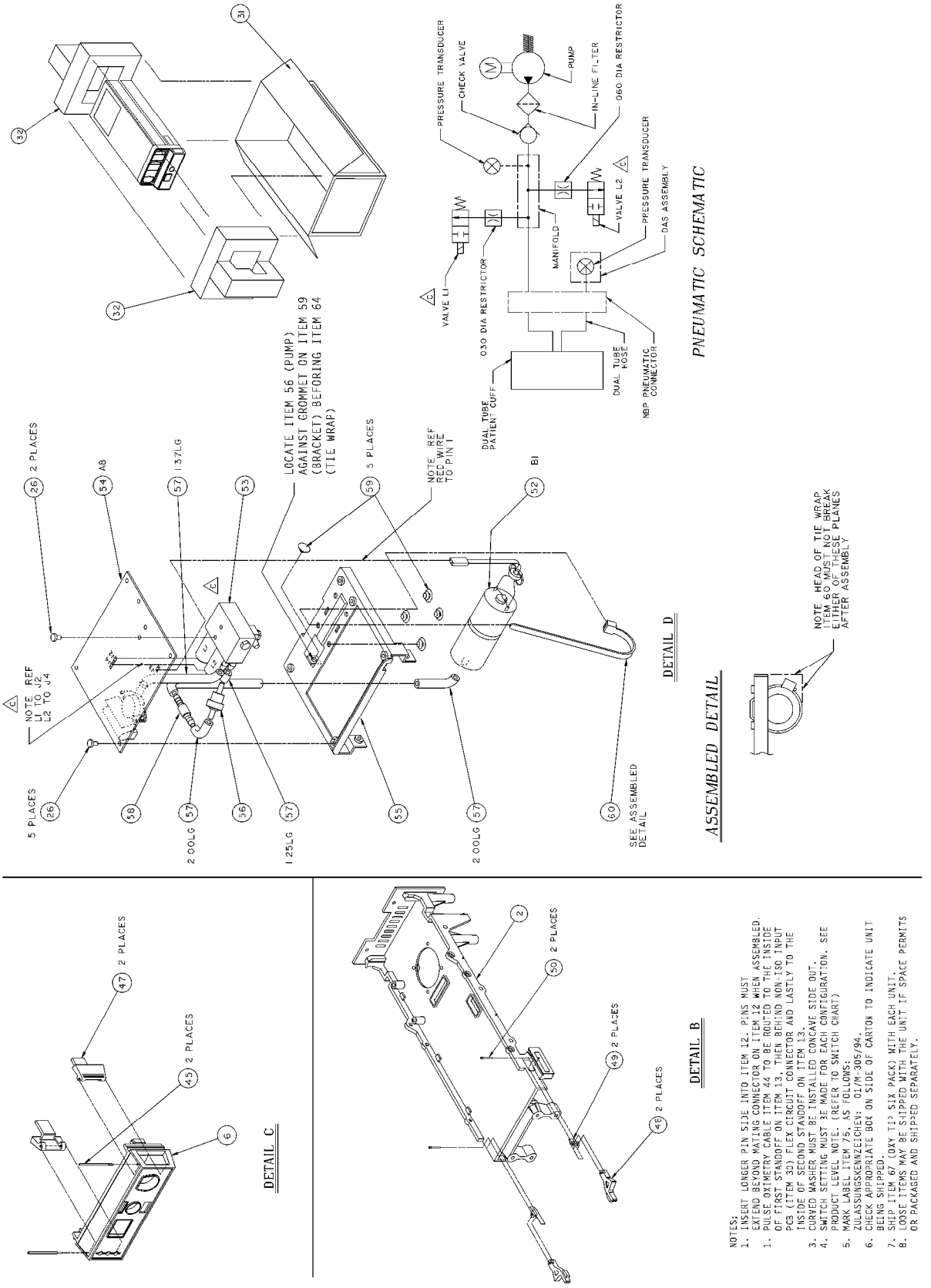
PNEUMATIC SCHEMATIC
PRESSURE TRANSDUCER
CHECK VALVE
PUMP
IN-LINE FILTER
060 DIA RESTRICTOR
PRESSURE TRANSDUCER
DAS ASSEMBLY
VALVE L2
MANIFOLD
VALVE L1
030 DIA RESTRICTOR
DUAL TUBE HOSE
NBP PNEUMATIC CONNECTOR
DUAL TUBE PATIENT CUFF
LOCATE ITEM 56 (PUMP) AGAINST GROMMET ON ITEM 59 (BRACKET) BEFORING ITEM 64 (TIE WRAP)
NOTE REF RED WIRE TO PIN 1
NOTE REF L1 TO J2 L2 TO J4
5 PLACES
2 PLACES
A8
I 37LG
B1
2 00LG
I 25LG
SEE ASSEMBLED DETAIL
DETAIL D
ASSEMBLED DETAIL
NOTE HEAD OF TIE WRAP ITEM 64 MUST BE BREAK EITHER OF THESE PLANES AFTER ASSEMBLY
DETAIL C
DETAIL B
NOTES;
1. INSERT LONGER PIN SIDE INTO ITEM 12. PINS MUST EXTEND BEYOND MATING CONNECTOR ON ITEM 12 WHEN ASSEMBLED.
1. PULSE OXIMETRY CABLE ITEM 44 TO BE ROUTED TO THE INSIDE OF FIRST STANDOFF ON ITEM 13, THEN BEHIND NON-ISO INPUT PCB (ITEM 30) FLEX CIRCUIT CONNECTOR AND LASTLY TO THE INSIDE OF SECOND STANDOFF ON ITEM 13.
3. CURVED WASHER MUST BE INSTALLED CONCAVE SIDE OUT.
4. SWITCH SETTING MUST BE MADE FOR EACH CONFIGURATION. SEE PRODUCT LEVEL NOTE. (REFER TO SWITCH CHART)
5. MARK LABEL ITEM 75, AS FOLLOWS: ZULASSUNGSKENNZEICHEN: 01/M-305/94.
6. CHECK APPROPRIATE BOX ON SIDE OF CARTON TO INDICATE UNIT BEING SHIPPED (OXY TI? SIX PACK) WITH EACH UNIT.
7. SHIP ITEM 67 (OXY TI? SIX PACK) WITH THE UNIT IF SPACE PERMITS
8. LOOSE ITEMS MAY BE SHIPPED WITH THE UNIT IF SPACE PERMITS OR PACKAGED AND SHIPPED SEPARATELY.

Schematic Diagram PN 411024-001J

1 of 2

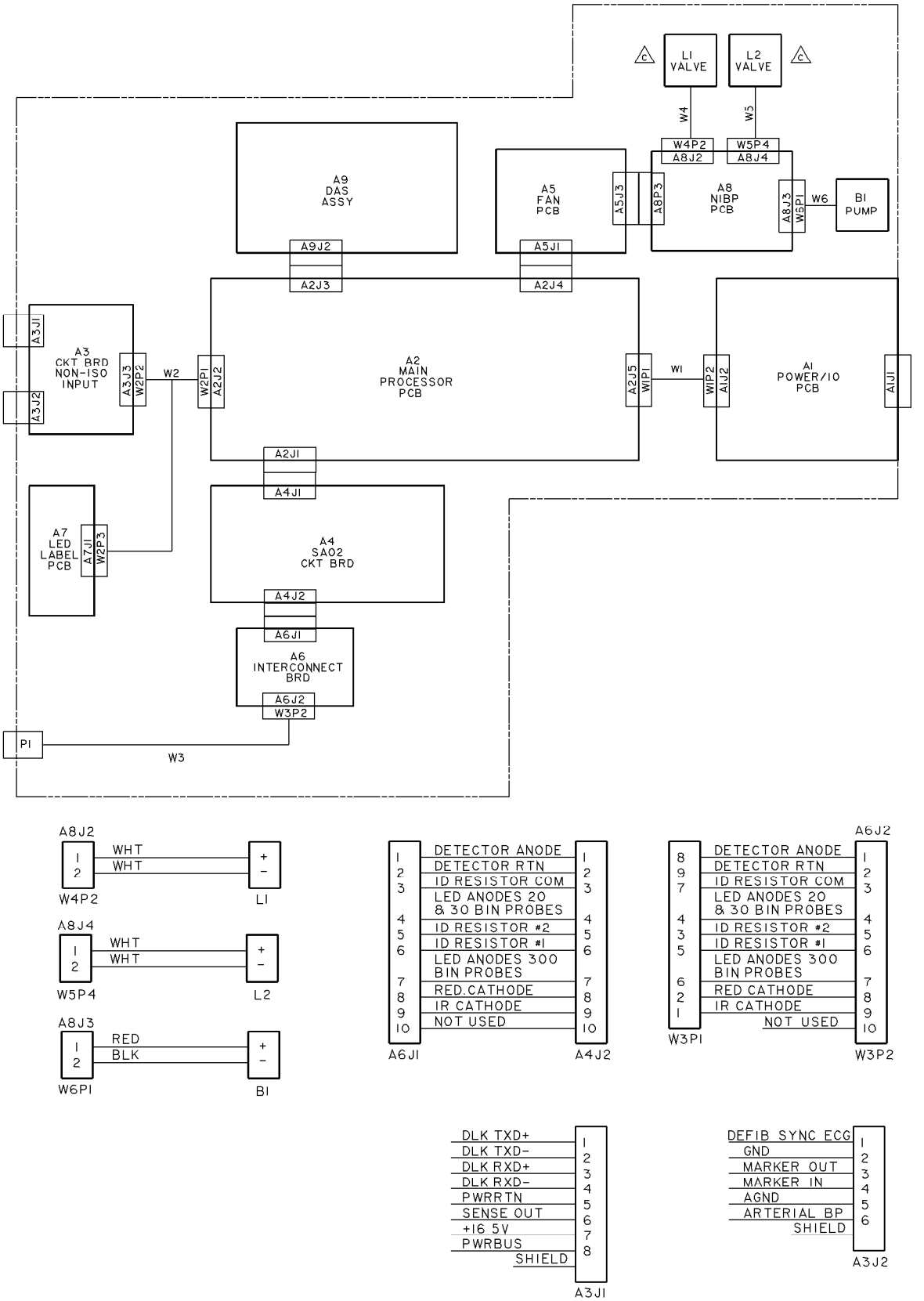

2 of 2

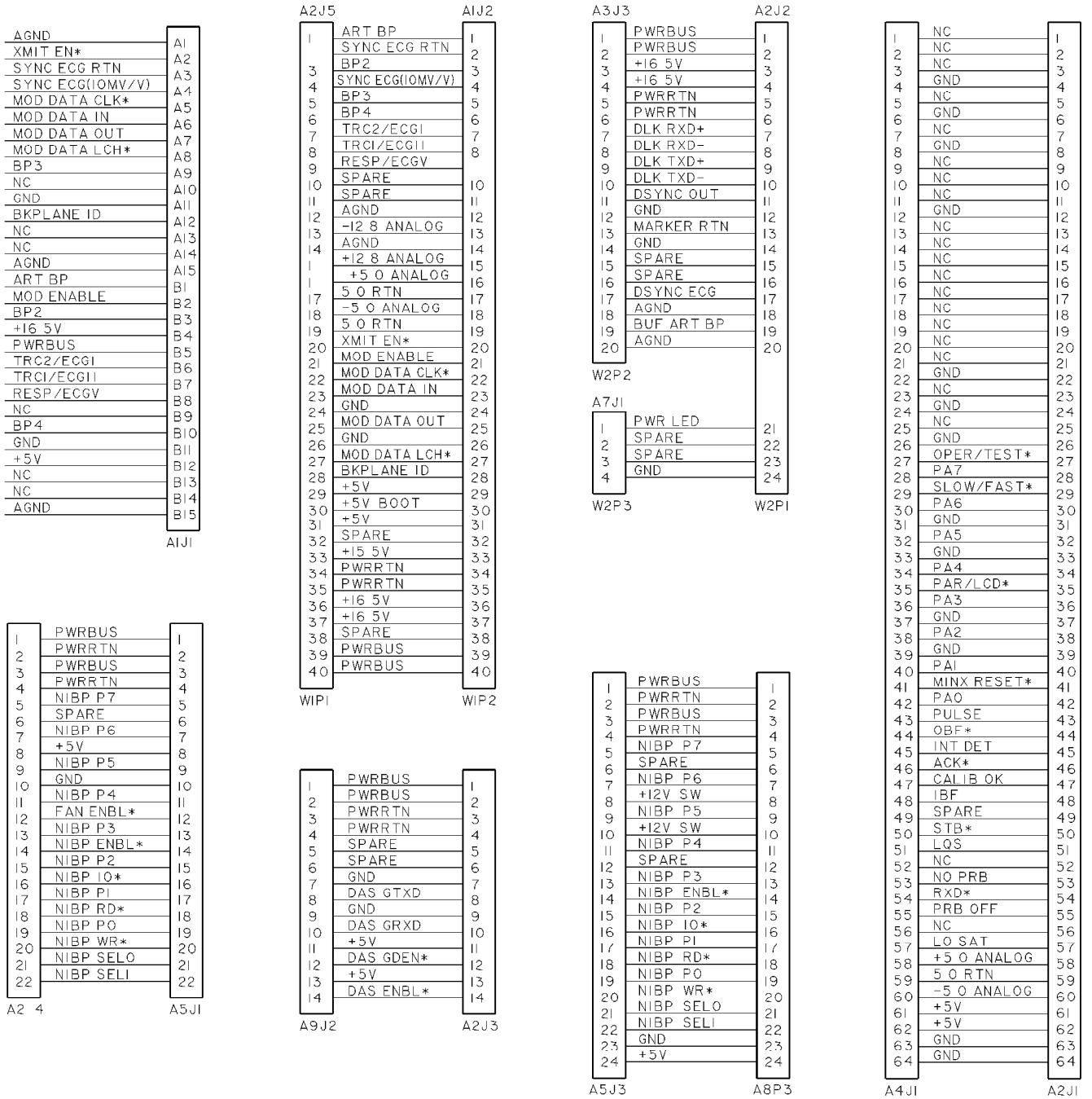
A1J1
AGND
XMIT EN*
SYNC ECG RTN
SYNC ECG(10MV/V)
MOD DATA CLK*
MOD DATA IN
MOD DATA OUT
MOD DATA LCH*
BP3
NC
GND
BKPLANE ID
NC
NC
AGND
ART BP
MOD ENABLE
BP2
+16 5V
PWRBUS
TRC2/ECG1
TRC1/ECG11
RESP/ECGV
NC
BP4
GND
+5V
NC
NC
AGND
A2J5
WIP1
ART BP
SYNC ECG RTN
BP2
SYNC ECG(10MV/V)
BP3
BP4
TRC2/ECG1
TRC1/ECG11
RESP/ECGV
SPARE
SPARE
AGND
-12 8 ANALOG
AGND
+12 8 ANALOG
+5 0 ANALOG
5 0 RTN
-5 0 ANALOG
5 0 RTN
XMIT EN*
MOD ENABLE
MOD DATA CLK*
MOD DATA IN
GND
MOD DATA OUT
GND
MOD DATA LCH*
BKPLANE ID
+5V
+5V BOOT
+5V
SPARE
+15 5V
PWRRTN
PWRRTN
+16 5V
+16 5V
SPARE
PWRBUS
PWRBUS
A1J2
WIP2
A3J3
W2P2
PWRBUS
PWRBUS
+16 5V
+16 5V
PWRRTN
PWRRTN
DLK RXD+
DLK RXD-
DLK TXD+
DLK TXD-
DSYNC OUT
GND
MARKER RTN
GND
SPARE
SPARE
DSYNC ECG
AGND
BUF ART BP
AGND
A2J2
A7J1
W2P3
PWR LED
SPARE
SPARE
GND
W2P1
A2 4
A5J1
PWRBUS
PWRRTN
PWRBUS
PWRRTN
NIBP P7
SPARE
NIBP P6
+5V
NIBP P5
GND
NIBP P4
FAN ENBL*
NIBP P3
NIBP ENBL*
NIBP P2
NIBP 10*
NIBP P1
NIBP RD*
NIBP P0
NIBP WR*
NIBP SELO
NIBP SELI
A9J2
PWRBUS
PWRBUS
PWRRTN
PWRRTN
SPARE
SPARE
GND
DAS GTXD
GND
DAS GRXD
+5V
DAS GDEN*
+5V
DAS ENBL*
A2J3
A5J3
PWRBUS
PWRRTN
PWRBUS
PWRRTN
NIBP P7
SPARE
NIBP P6
+12V SW
NIBP P5
+12V SW
NIBP P4
SPARE
NIBP P3
NIBP ENBL*
NIBP P2
NIBP 10*
NIBP P1
NIBP RD*
NIBP P0
NIBP WR*
NIBP SELO
NIBP SELI
GND
+5V
A8P3
A4J1
NC
NC
NC
GND
NC
GND
NC
GND
NC
NC
NC
GND
NC
NC
NC
NC
NC
NC
NC
NC
NC
GND
NC
GND
NC
GND
OPER/TEST*
PA7
SLOW/FAST*
PA6
GND
PA5
GND
PA4
PAR/LCD*
PA3
GND
PA2
GND
PA1
MINX RESET*
PA0
PULSE
OBF*
INT DET
ACK*
CALIB OK
IBF
SPARE
STB*
LQS
NC
NO PRB
RXD*
PRB OFF
NC
LO SAT
+5 0 ANALOG
5 0 RTN
-5 0 ANALOG
+5V
+5V
GND
GND
A2J1

Parts List PN 411024-001J

Item	Reference Designation	Parts List	Part Number	Qty
1		Cover, Module	400895-001	1
2		Frame	400982-001	1
3		Shield, Top	401679-001	1
4		Shield, Bottom	401679-002	1
5	A9	800 Acquisition Module, 10-Lead	417123-001	1
6		Front Bezel, Lower	401105-004	1
7	A5	Fan PCB	403549-002	1
8		Trim, Rubber, Front Bezel	404620-001	1
9		Mounting Strap, Trim	404621-001	1
10	A1	Power Supply PCB	401309-002	1
12	A2	Module Processor PCB	800210-005	1
13		Circuit Board/Bezel Mount	404762-001	1
14		Shield, Pulse Oximetry PCB	401680-001	1
15		Plate, Chassis Ground, Bottom/Front	402317-001	1
16	A4	Pulse Oximetry PCB	401189-001	1
17		Plate, Chassis Ground, Rear	404680-002	1
19		Spring, Compression	402315-001	2
20		Screw, Power Supply PCB Mounting, SST, 4-40	402214-001	4
21		Label, Model/Serial Number	404525-006	1
22	A7	Power Indicator PCB	403170-008	1
23		Spring, Chassis Ground, Rear	403741-001	AR
24		Screw, FLH, 100˚, Phillips, SST, 4-40 x 3/16	4505-406	6
25		Nut, Hex, 4-40	4521-304	2
26		Screw, BDGH, Phillips, 4-40 x 3/16	45074-406	17
27		Screw, BDGH, Phillips, 4-40 x 1-3/8	45074-438	2
28		Spacer, Male/Female, 4-40 x 0.875	4656-414	2
29		Screw, 4-40 x 7/8	404069-001	2
30	A3	Non-Isolated Input PCB	401315-002	1
31		Carton, Shipping	404211-003	1
32		Foam Insert	404211-004	2
33		Screw, BDGH, Phillips, 4-40 x 5/8	45074-420	2
34		Screw, BDGH, Phillips, 4-40 x 3/4	45074-424	4
35	A6	Interconnect PCB	800006-001	1
36		Insulator, Bottom Shield	404188-001	2
38		Screw, BDGH, Phillips, 4-40 x 3/8	45074-412	2
39		Washer, Pulse Oximetry Connector	4550-250	1
40		Screw, FLH, Phillips, SST, 4-40 x 3/8	4505-412	2
41		Tram 100 - 850 A and SL Modules Service Manual	404422-065	AR
42		Adhesive, Diecut, Front Right	415098-010	1

Item	Reference Designation	Parts List	Part Number	Qty
43		Screw, PHD, 4-40 x 0.188, Modified (Determined by Destination)	409009-001	1
43		Screw, PHD, 4-40 x 0.188, (Determined by Destination)	45074-406	1
44		Harness Assembly, SpO2 – w/Choke	700091-004	1
45		Pin, Latch	402806-001	0
47		Button, Latch	402106-001	2
48		Latch	401682-001	2
49		Spring, Latch	406019-001	2
50		Pin, Latch	406037-001	2
51		Bracket, Power Supply PCB	406254-001	1
52	B1	Pump Assembly, NBP, w/Harness	408169-002	1
53	A10	NBP Valve Assembly	416153-001	1
54	A8	NBP PCB	800316-002	1
55		Bracket, NBP Mounting	404296-001	1
56		Check Valve, 0.125 ID	404675-001	1
57		Tubing, Silastic	401582-001	AR
58		Filter, 43 Micron	404679-001	1
59		Grommet, 1/4 Dia, 1/8 High, 1/16 Panel Thickness	404749-001	5
60		Tie Wrap	4535-002	1
63		Screw, PNH, Phillips, SST, 4-40 x 3/16	4502-406	2
67		SpO2 Sensor, Adult, Finger, Package of 6	411667-001	1
68		Label, Front, 800SL, English (Determined by Destination)	411091-002	1
68		Label, Front, 800SL, German (Determined by Destination)	411091-003	1
68		Label, Front, 800SL, French (Determined by Destination)	411091-004	1
68		Label, Front, 800SL Swedish (Determined by Destination)	411091-005	1
68		Label, Front, 800SL, Spanish (Determined by Destination)	411091-006	1
68		Label, Front, 800SL, Italian (Determined by Destination)	411091-007	1
68		Label, Front, 800SL, Dutch (Determined by Destination)	411091-008	1
69		Label, Top, English (Determined by Destination)	411091-009	1
69		Label, Top, German (Determined by Destination)	411091-010	1
69		Label, Top, French (Determined by Destination)	411091-011	1
69		Label, Top, Swedish (Determined by Destination)	411091-012	1
69		Label, Top, Spanish (Determined by Destination)	411091-013	1
69		Label, Top, Italian (Determined by Destination)	411091-014	1
69		Label, Top, Dutch (Determined by Destination)	411091-015	1
70		Label, 60 Hertz (Determined by Destination)	411091-018	1
70		Label, 50 Hertz (Determined by Destination)	411091-019	1
71		Label, Cover, English (Determined by Destination)	411091-016	1

Item	Reference Designation	Parts List	Part Number	Qty
71		Label, Cover, German (Determined by Destination)	411091-020	1
71		Label, Cover, French (Determined by Destination)	411091-021	1
71		Label, Cover, Swedish (Determined by Destination)	411091-022	1
71		Label, Cover, Spanish (Determined by Destination)	411091-023	1
71		Label, Cover, Italian (Determined by Destination)	411091-024	1
71		Label, Cover, International (Determined by Destination)	411091-025	1
72		Label, TUV (Determined by Destination)	408103-003	1
72		Label, UL Listed (Determined by Destination)	408230-002	1
73	P1	Connector, Header, 64-Pin, w/Ferrites	409203-001	1
74		Adhesive, Diecut, Front Left	415098-002	1
76		Spring, Chassis Ground, Small	414610-001	AR
77		Adhesive, Mylar	415316-001	1
78		Label, CE Mark	408230-008	1
79		PC Post, 2 x 7	412062-004	1
80		PC Post, 2 x 11	412062-005	1

Assembly Revisions PN 411024

The baseline revision for this assembly is pn 411024-001J. To convert the parts list back to a previous revision, change all part numbers, descriptions, and quantities as indicated in the revision tables given below.

PN 411024-001B

Item	Reference Designation	Description	Revision's Part Number	Baseline Part Number	Qty
5	A9	DAS 800SL Module, 10-Lead	411025-001	417123-001	1
11		Label Set, Tram 800SL	411091-001	Not Used	1
12		Module Processor PCB	800210-002	800210-005	1
42		Adhesive, Loctite Prism 411	4851-082	415098-001	AR
53	A6	NBP Valve Assembly	413021-001	416153-001	1
54	A8	NBP PCB	800316-001	800316-002	1
63		Screw, Phillips, STT, 4-40 x 3/16	Not Used	4502-406	2
73		Connector, Header 64-pin w/Ferrites	Not Used	409203-001	1
74		Adhesive, Diecut Front Left	Not Used	415098-002	1
76		Spring, Chassis Ground, Small	Not Used	414610-001	AR
77		Adhesive, Mylar	Not Used	415316-001	1
78		Label, CE Mark	Not Used	408230-008	1
79		PC Post, 2 x 7	Not Used	412062-004	1
80		PC Post, 2 x 11	Not Used	412062-005	1

PN 411024-001C

Item	Reference Designation	Description	Revision's Part Number	Baseline Part Number	Qty
5	A9	DAS 800SL Module, 10-Lead	411025-001	417123-001	1
12		Module Processor PCB	800210-002	800210-005	1
53	A6	NBP Valve Assembly	413021-001	416153-001	1
54	A8	NBP PCB	800316-001	800316-002	1
42		Adhesive, Loctite Prism 411	4851-082	415098-001	AR
74		Adhesive, Diecut Front Left	Not Used	415098-002	1
76		Spring, Chassis Ground, Small	Not Used	414610-001	AR
77		Adhesive, Mylar	Not Used	415316-001	1
78		Label, CE Mark	Not Used	408230-008	1
79		PC Post, 2 x 7	Not Used	412062-004	1
80		PC Post, 2 x 11	Not Used	412062-005	1

PN 411024-001D

This revision was a documentation change that does not affect this manual.
Refer to pn 411024-001C for changes to the parts list.

PN 411024-001E

Item	Reference Designation	Description	Revision's Part Number	Baseline Part Number	Qty
5	A9	DAS 800SL Module, 10-Lead	411025-001	417123-001	1
12		Module Processor PCB	800210-002	800210-005	1
53	A6	NBP Valve Assembly	413021-001	416153-001	1
54	A8	NBP PCB	800316-001	800316-002	1
76		Spring, Chassis Ground, Small	Not Used	414610-001	AR
77		Adhesive, Mylar	Not Used	415316-001	1
78		Label, CE Mark	Not Used	408230-008	1
79		PC Post, 2 x 7	Not Used	412062-004	1
80		PC Post, 2 x 11	Not Used	412062-005	1

PN 411024-001F

This revision was a documentation change that does not affect this manual.
Refer to pn 411024-001E for changes to the parts list.

PN 411024-001G

Item	Reference Designation	Description	Revision's Part Number	Baseline Part Number	Qty
5	A9	DAS 800SL Module, 10-Lead	411025-001	417123-001	1
53	A6	NBP Valve Assembly	413021-001	416153-001	1
54	A8	NBP PCB	800316-001	800316-002	1

PN 411024-001H

Item	Reference Designation	Description	Revision's Part Number	Baseline Part Number	Qty
5	A9	DAS 800SL Module, 10-Lead	411025-001	417123-001	1
54	A8	NBP PCB	800316-001	800316-002	1

16 TRAM 850A/SL MODULE PN 412657/412658

General **16-2**
Circuit Boards 16-2

Exploded View PN 412657-001H **16-3**

Schematic Diagram PN 412657-001H **16-5**

Parts List PN 412657-001H **16-7**

Assembly Revisions PN 412657 ..... **16-10**

Exploded View PN 412658-001H **16-12**

Schematic Diagram PN 412658-001H **16-14**

Parts List PN 412658-001H **16-16**

Assembly Revisions PN 412658 ..... **16-19**

General

Circuit Boards

Details about the circuit boards contained in the Tram 850A/SL are discussed in later chapters arranged by part number.

Table 15-1. Circuit Board Overview

Module Type	Upper Level	Leadwire Configuration	DAS Module	Acquisition Processor PCB	Module Processor PCB
Tram 850A	412657-001A–G	5-Leadwire	411068-001	800330-011	800210-005
Tram 850A	412657-001H	5-Leadwire	417124-001 (Replaces 411068-001)	801040-001	800210-005
Tram 850SL	412658-001A–G	10-Leadwire	411025-001	800330-012	800210-005
Tram 850SL	412658-001H	10-Leadwire	417123-001 (Replaces 411025-001)	801040-001	800210-005

Exploded View

PN 412657-001H

1 of 2

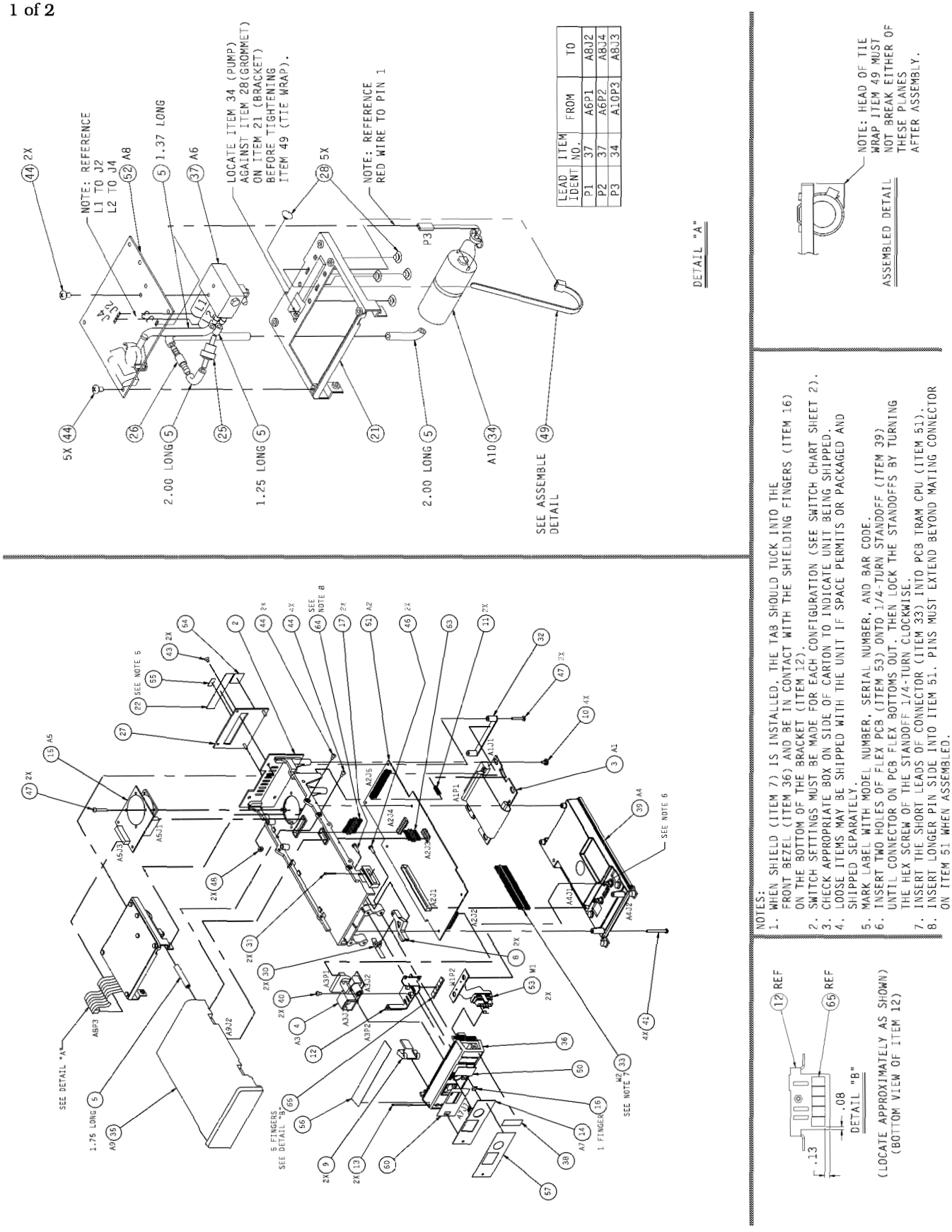

LEAD IDENT	ITEM NO.	FROM	TO
P1	37	A6P1	A8J2
P2	37	A6P2	A8J4
P3	34	A10P3	A8J3

NOTES:

1. WHEN SHIELD (ITEM 7) IS INSTALLED, THE TAB SHOULD TUCK INTO THE FRONT BEZEL (ITEM 36) AND BE IN CONTACT WITH THE SHIELDING FINGERS (ITEM 16) ON THE BOTTOM OF THE BRACKET (ITEM 12).
2. SWITCH SETTINGS MUST BE MADE FOR EACH CONFIGURATION (SEE SWITCH CHART SHEET 2).
3. CHECK APPROPRIATE BOX ON SIDE OF CARTON TO INDICATE UNIT BEING SHIPPED.
4. LOOSE ITEMS MAY BE SHIPPED WITH THE UNIT IF SPACE PERMITS OR PACKAGED AND SHIPPED SEPARATELY.
5. MARK LABEL WITH MODEL NUMBER, SERIAL NUMBER, AND BAR CODE.
6. INSERT TWO HOLES OF FLEX PCB (ITEM 53) ONTO 1/4-TURN STANDOFF (ITEM 39) UNTIL CONNECTOR ON PCB FLEX BOTTOMS OUT. THEN LOCK THE STANDOFFS BY TURNING THE HEX SCREW OF THE STANDOFF 1/4-TURN CLOCKWISE.
7. INSERT THE SHORT LEADS OF CONNECTOR (ITEM 33) INTO PCB TRAM CPU (ITEM 51).
8. INSERT LONGER PIN SIDE INTO ITEM 51. PINS MUST EXTEND BEYOND MATING CONNECTOR ON ITEM 51 WHEN ASSEMBLED.

2 of 2

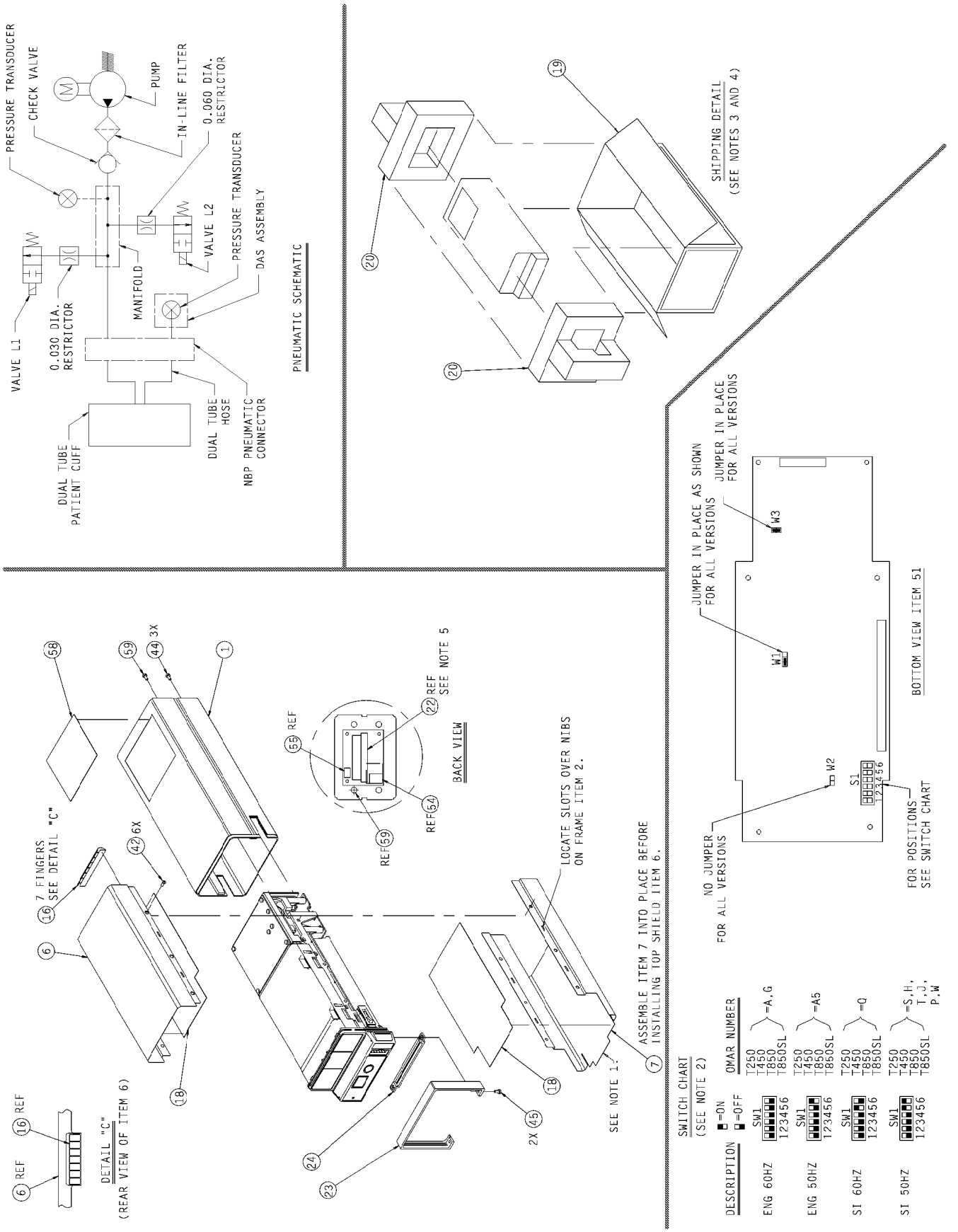
PRESSURE TRANSDUCER
CHECK VALVE
PUMP
IN-LINE FILTER
0.060 DIA. RESTRICTOR
PRESSURE TRANSDUCER
VALVE L2
DAS ASSEMBLY
MANIFOLD
VALVE L1
0.030 DIA. RESTRICTOR
DUAL TUBE PATIENT CUFF
DUAL TUBE HOSE
NBP PNEUMATIC CONNECTOR
PNEUMATIC SCHEMATIC
SHIPPING DETAIL (SEE NOTES 3 AND 4)
JUMPER IN PLACE AS SHOWN FOR ALL VERSIONS
JUMPER IN PLACE FOR ALL VERSIONS
W3
W1
W2
S1
123456
BOTTOM VIEW ITEM 51
NO JUMPER FOR ALL VERSIONS
FOR POSITIONS SEE SWITCH CHART
7 FINGERS SEE DETAIL "C"
6X
3X
REF SEE NOTE 5
BACK VIEW
REF
LOCATE SLOTS OVER NIBS ON FRAME ITEM 2.
ASSEMBLE ITEM 7 INTO PLACE BEFORE INSTALLING TOP SHIELD ITEM 6.
SEE NOTE 1.
2X
DETAIL "C" (REAR VIEW OF ITEM 6)
SWITCH CHART (SEE NOTE 2)
■=ON
■=OFF
DESCRIPTION
QMAR NUMBER
ENG 60HZ
ENG 50HZ
SI 60HZ
SI 50HZ
SW1
T250 T450 T850 T850SL =A,G
T250 T450 T850 T850SL =A5
T250 T450 T850 T850SL =Q
T250 T450 T850 T850SL =S,H, T,J, P,W

Schematic Diagram PN 412657-001H

1 of 2

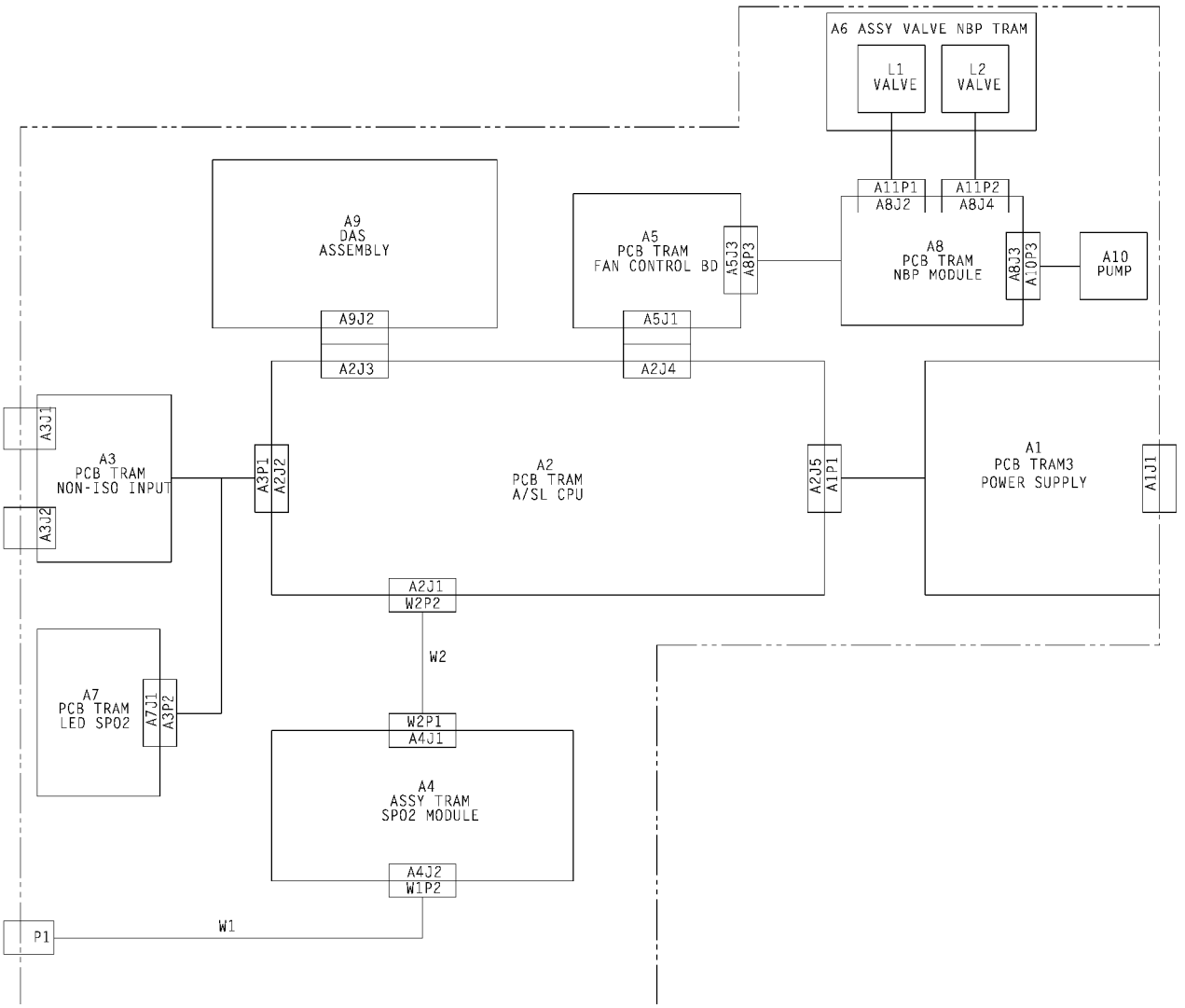

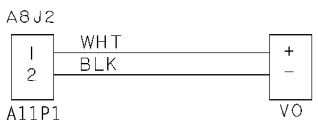

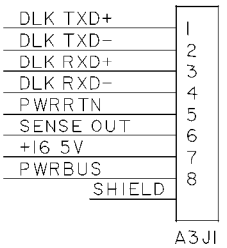

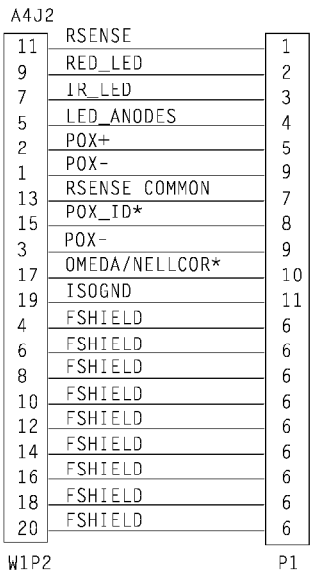

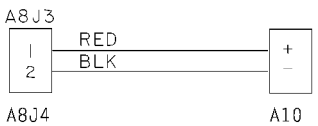

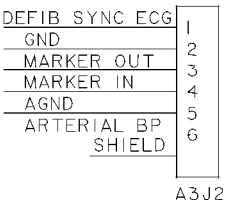

2 of 2

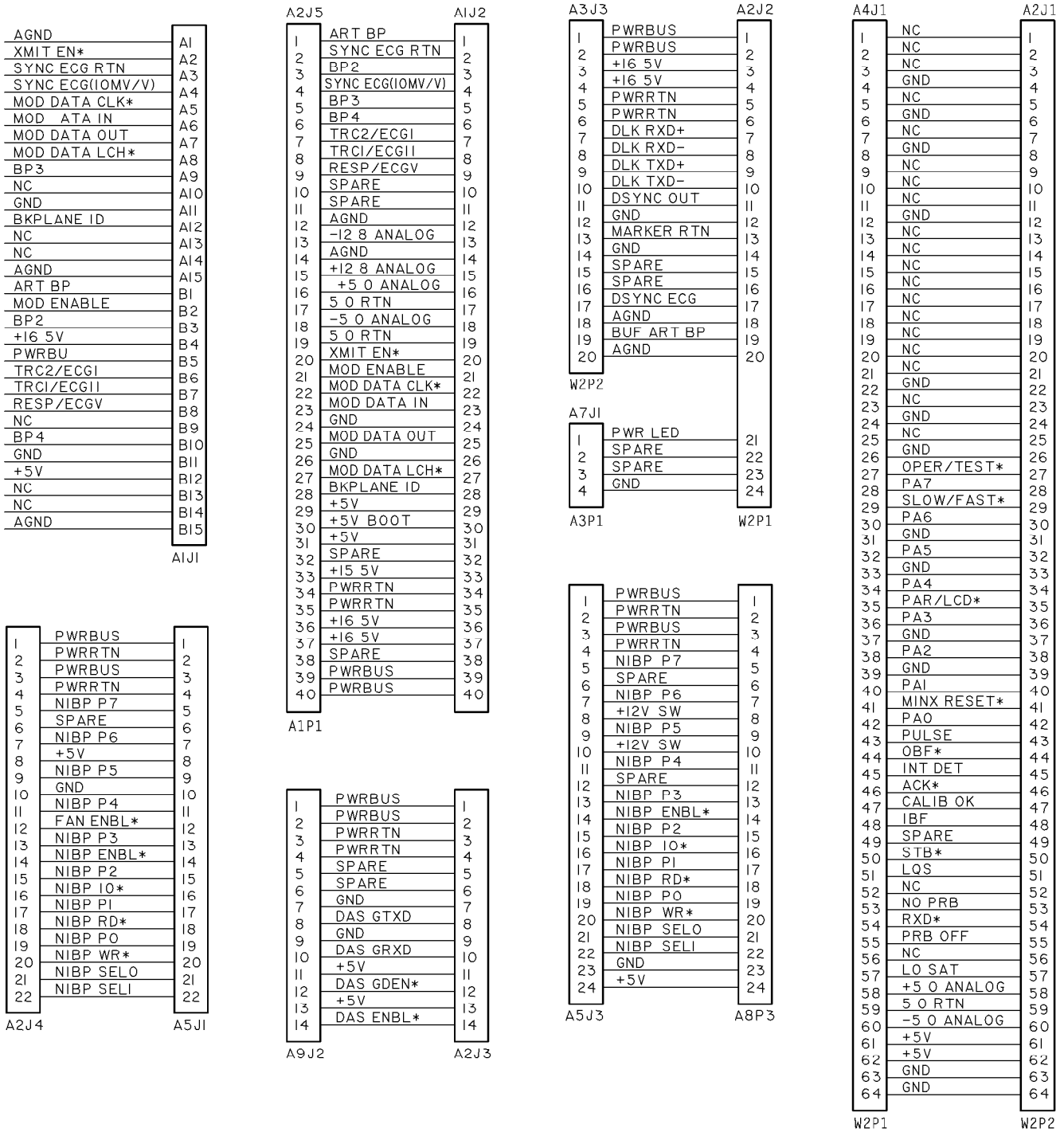
A1J1
AGND
XMIT EN*
SYNC ECG RTN
SYNC ECG(10MV/V)
MOD DATA CLK*
MOD DATA IN
MOD DATA OUT
MOD DATA LCH*
BP3
NC
GND
BKPLANE ID
NC
NC
AGND
ART BP
MOD ENABLE
BP2
+16 5V
PWRBU
TRC2/ECGI
TRCI/ECGII
RESP/ECGV
NC
BP4
GND
+5V
NC
NC
AGND
A1J2
A1P1
ART BP
SYNC ECG RTN
BP2
SYNC ECG(10MV/V)
BP3
BP4
TRC2/ECGI
TRCI/ECGII
RESP/ECGV
SPARE
SPARE
AGND
-12 8 ANALOG
AGND
+12 8 ANALOG
+5 0 ANALOG
5 0 RTN
-5 0 ANALOG
5 0 RTN
XMIT EN*
MOD ENABLE
MOD DATA CLK*
MOD DATA IN
GND
MOD DATA OUT
GND
MOD DATA LCH*
BKPLANE ID
+5V
+5V BOOT
+5V
SPARE
+15 5V
PWRRTN
PWRRTN
+16 5V
+16 5V
SPARE
PWRBUS
PWRBUS
A2J2
A3J3
W2P2
PWRBUS
PWRBUS
+16 5V
+16 5V
PWRRTN
PWRRTN
DLK RXD+
DLK RXD-
DLK TXD+
DLK TXD-
DSYNC OUT
GND
MARKER RTN
GND
SPARE
SPARE
DSYNC ECG
AGND
BUF ART BP
AGND
A7J1
A3P1
PWR LED
SPARE
SPARE
GND
W2P1
A2J4
A5J1
PWRBUS
PWRRTN
PWRBUS
PWRRTN
NIBP P7
SPARE
NIBP P6
+5V
NIBP P5
GND
NIBP P4
FAN ENBL*
NIBP P3
NIBP ENBL*
NIBP P2
NIBP 10*
NIBP PI
NIBP RD*
NIBP PO
NIBP WR*
NIBP SELO
NIBP SELI
A9J2
A2J3
PWRBUS
PWRBUS
PWRRTN
PWRRTN
SPARE
SPARE
GND
DAS GTXD
GND
DAS GRXD
+5V
DAS GDEN*
+5V
DAS ENBL*
A5J3
A8P3
PWRBUS
PWRRTN
PWRBUS
PWRRTN
NIBP P7
SPARE
NIBP P6
+12V SW
NIBP P5
+12V SW
NIBP P4
SPARE
NIBP P3
NIBP ENBL*
NIBP P2
NIBP 10*
NIBP PI
NIBP RD*
NIBP PO
NIBP WR*
NIBP SELO
NIBP SELI
GND
+5V
A4J1
A2J1
W2P1
W2P2
NC
NC
NC
GND
NC
GND
NC
GND
NC
NC
NC
GND
NC
NC
NC
NC
NC
NC
NC
NC
GND
NC
GND
NC
GND
OPER/TEST*
PA7
SLOW/FAST*
PA6
GND
PA5
GND
PA4
PAR/LCD*
PA3
GND
PA2
GND
PAI
MINX RESET*
PAO
PULSE
OBF*
INT DET
ACK*
CALIB OK
IBF
SPARE
STB*
LQS
NC
NO PRB
RXD*
PRB OFF
NC
LO SAT
+5 0 ANALOG
5 0 RTN
-5 0 ANALOG
+5V
+5V
GND
GND

Parts List PN 412657-001H

Item	Reference Designation	Parts List	Part Number	Qty
1		Cover, Module	400895-001	1
2		Frame	400982-001	1
3	A1	Power Supply PCB Assembly	401309-002	1
4	A3	Non-Isolated Input PCB Assembly	401315-002	1
5		Tubing, Silastic	401582-001	AR
6		Shield, Top	401679-001	1
7		Shield, Bottom	401679-002	1
8		Latch	401682-001	2
9		Button, Latch	402106-001	2
10		Screw, Shoulder	402214-001	4
11		Spring, Compression	402315-001	2
12		Plate, Chassis Ground, Bottom/Front	402317-001	1
13		Pin, Latch	402806-001	2
14	A7	Power Indicator PCB	403170-011	1
15	A5	Fan PCB	403549-002	1
16		Spring, Chassis Ground, Rear	403741-001	AR
17		Screw, BDGH, Phillips, 4-40 x 7/8	404069-001	2
18		Insulator, Bottom Shield	404188-001	2
19		Carton, Shipping	404211-003	1
20		Foam, Insert	404211-004	1
21		Bracket, NBP Mounting	404296-001	1
22		Label, Blank	404525-006	1
23		Trim, Rubber, Front Bezel	404620-001	1
24		Mounting Strap, Trim	404621-001	1
25		Check Valve, 0.125 ID	404675-001	1
26		Filter, 43 Micron	404679-001	1
27		Plate, Chassis Ground, Rear	404680-002	1
28		Grommet, 1/4 Dia, 1/8 High, 1/16 Panel Thickness	404749-001	5
30		Spring, Latch	406019-001	2
31		Pin, Latch	406037-001	2
32		Bracket, Power Supply PCB	406254-001	1
33	W2	Connector, Header, Dual, 64-Pin	407452-002	1
34	A10	Pump Assembly, NBP, w/Harness	408169-002	1
35	A9	800 Acquisition Module, 5-Lead	417124-001	1
36		Front Bezel, Tram	412659-001	1
37	A6	NBP Valve Assembly	416153-001	1
38		Label, Pulse Oximetry, Nellcor (Determined by Destination)	413831-002	1
39	A4	Pulse Oximetry Assembly (Including Pulse Oximetry PCB, PN 800674-00X)	414409-001	1
40		Screw, BDGH, Phillips, 4-40 x 3/16	4502-406	2

Item	Reference Designation	Parts List	Part Number	Qty
41		Screw, BDGH, Phillips, 4-40 x 1-1/4	4502-440	4
42		Screw, FLH, 100˚, Phillips, SST, 4-40 x 3/16	4505-406	6
43		Screw, FLH, Phillips, SST, 4-40 x 3/8	4505-412	2
44		Screw, BDGH, Phillips, 4-40 x 3/16	45074-406	15
45		Screw, BDGH, Phillips, 4-40 x 3/8	45074-412	2
46		Screw, BDGH, Phillips, 4-40 x 5/8	45074-420	2
47		Screw, BDGH, Phillips, 4-40 x 3/4	45074-424	4
48		Nut, Hex, 4-40	4521-304	2
49		Tie Wrap	4535-002	1
50		Adhesive, Diecut, Front Right	415098-003	AR
51	A2	Module Processor PCB	800210-005	1
52	A8	NPB PCB	800316-002	1
53	W1	Harness, Pulse Oximetry PCB-to-Connector	800892-001	1
54		Label, UL Listed (Determined by Destination)	40230-003	1
55		Label, 60 Hertz (Determined by Destination)	411091-018	1
55		Label, 50 Hertz (Determined by Destination)	411091-019	1
56		Label, Top, English (Determined by Destination)	411091-009	1
56		Label, Top, German (Determined by Destination)	411091-010	1
56		Label, Top, French (Determined by Destination)	411091-011	1
56		Label, Top, Swedish (Determined by Destination)	411091-012	1
56		Label, Top, Spanish (Determined by Destination)	411091-013	1
56		Label, Top, Italian (Determined by Destination)	411091-014	1
56		Label, Top, Dutch (Determined by Destination)	411091-015	1
57		Label, Front, 850A, English (Determined by Destination)	413841-001	1
57		Label, Front, 850A, German (Determined by Destination)	413841-002	1
57		Label, Front, 850A, French (Determined by Destination)	413841-003	1
57		Label, Front, 850A, Swedish (Determined by Destination)	413841-004	1
57		Label, Front, 850A, Spanish (Determined by Destination)	413841-005	1
57		Label, Front, 850A, Italian (Determined by Destination)	413841-006	1
57		Label, Front, 850A, Dutch (Determined by Destination)	413841-007	1
58		Label, Cover, English (Determined by Destination)	414051-001	1
58		Label, Cover, German (Determined by Destination)	414051-002	1
58		Label, Cover, French (Determined by Destination)	414051-003	1
58		Label, Cover, Swedish (Determined by Destination)	414051-004	1
58		Label, Cover, Spanish (Determined by Destination)	414051-005	1
58		Label, Cover, Italian (Determined by Destination)	414051-006	1
58		Label, Cover, International (Determined by Destination)	414051-007	1

Item	Reference Designation	Parts List	Part Number	Qty
59		Screw, PHD, 4-40 x 0.188, Modified (Determined byDestination)	409009-001	1
59		Screw, PHD, 4-40 x 0.188 (Determined by Destination)	45074-406	1
60		Adhesive, Diecut, Front Left	415098-002	1
61		Tram 100 - 850 A and SL Module Service Manual	404422-065	1
62		Label, CE Mark	408230-008	1
63		PC Post, 2 x 7	412062-004	1
64		PC Post, 2 x 11	412062-005	1
65		Spring, Chassis Ground, Small	414610-001	AR

Assembly Revisions PN 412657

The baseline revision for this assembly is pn 412657-001H. To convert the parts list back to a previous revision, change all part numbers, descriptions, and quantities as indicated in the revision tables given below.

PN 412657-001A

Item	Reference Designation	Description	Revision's Part Number	Baseline Part Number	Qty
35	A9	DAS 800A Module, 5-Lead	411068-001	417124-001	1
37	A6	NBP Valve Assembly	413021-001	416153-001	1
50		Adhesive, Loctite Prism 411	4851-082	415098-001	AR
51		Module Processor PCB	800210-002	800210-005	1
52	A8	NBP PCB	800316-001	800316-002	1
59		Spring, Chassis Ground, Small	Not Used	414610-001	AR
60		Adhesive, Diecut Front Left	Not Used	415098-002	1
62		Label, CE Mark	Not Used	408230-008	1
63		PC Post, 2 x 7	Not Used	412062-004	1
64		PC Post, 2 x 11	Not Used	412062-005	1

PN 412657-001B

This revision was a documentation change that does not affect this manual.
Refer to pn 412657-001A for changes to the parts list.

PN 412657-001C

Item	Reference Designation	Description	Revision's Part Number	Baseline Part Number	Qty
35	A9	DAS 800A Module, 5-Lead	411068-001	417124-001	1
37	A6	NBP Valve Assembly	413021-001	416153-001	1
51		Module Processor PCB	800210-002	800210-005	1
52	A8	NBP PCB	800316-001	800316-002	1
62		Label, CE Mark	Not Used	408230-008	1
63		PC Post, 2 x 7	Not Used	412062-004	1
64		PC Post, 2 x 11	Not Used	412062-005	1

PN 412657-001D

This revision was a documentation change that does not affect this manual.
Refer to pn 412657-001C for changes to the parts list.

PN 412657-001E

This revision was a documentation change that does not affect this manual.
Refer to pn 412657-001C for changes to the parts list.

PN 412657-001F

Item	Reference Designation	Description	Revision's Part Number	Baseline Part Number	Qty
35	A9	DAS 800A Module, 5-Lead	411068-001	417124-001	1
37	A6	NBP Valve Assembly	413021-001	416153-001	1
52	A8	NBP PCB	800316-001	800316-002	1

PN 412657-001G

Item	Reference Designation	Description	Revision's Part Number	Baseline Part Number	Qty
35	A9	DAS 800A Module, 5-Lead	411068-001	417124-001	1
52	A8	NBP PCB	800316-001	800316-002	1

Exploded View

PN 412658-001H

1 of 2

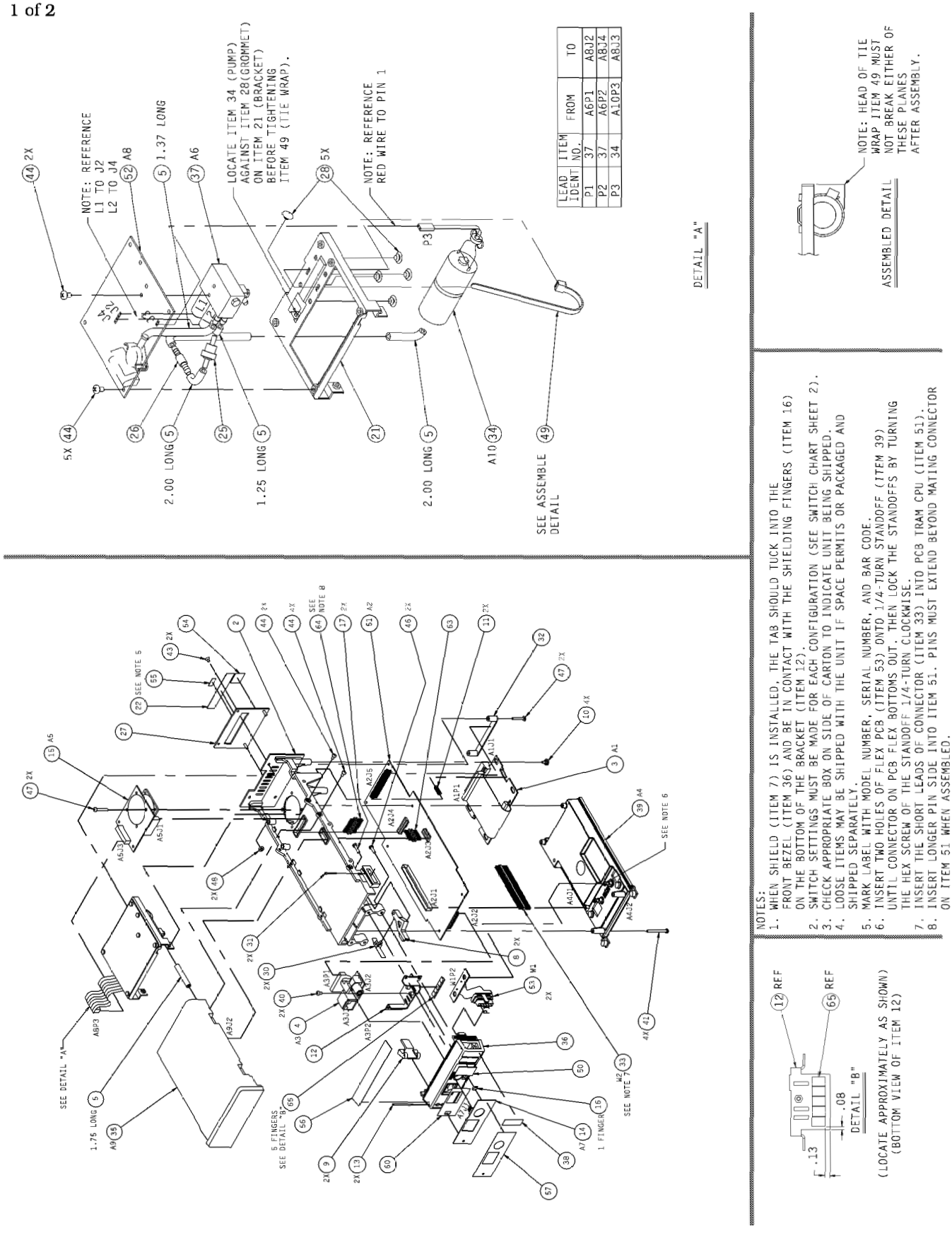

LEAD IDENT	ITEM NO.	FROM	TO
P1	37	A6P1	A8J2
P2	37	A6P2	A8J4
P3	34	A10P3	A8J3

NOTES:

1. WHEN SHIELD (ITEM 7) IS INSTALLED, THE TAB SHOULD TUCK INTO THE FRONT BEZEL (ITEM 36) AND BE IN CONTACT WITH THE SHIELDING FINGERS (ITEM 16) ON THE BOTTOM OF THE BRACKET (ITEM 12).
2. SWITCH SETTINGS MUST BE MADE FOR EACH CONFIGURATION (SEE SWITCH CHART SHEET 2).
3. CHECK APPROPRIATE BOX ON SIDE OF CARTON TO INDICATE UNIT BEING SHIPPED.
4. LOOSE ITEMS MAY BE SHIPPED WITH THE UNIT IF SPACE PERMITS OR PACKAGED AND SHIPPED SEPARATELY.
5. MARK LABEL WITH MODEL NUMBER, SERIAL NUMBER, AND BAR CODE.
6. INSERT TWO HOLES OF FLEX PCB (ITEM 53) ONTO 1/4-TURN STANDOFF (ITEM 39) UNTIL CONNECTOR ON PCB FLEX BOTTOMS OUT. THEN LOCK THE STANDOFFS BY TURNING THE HEX SCREW OF THE STANDOFF 1/4-TURN CLOCKWISE.
7. INSERT THE SHORT LEADS OF CONNECTOR (ITEM 33) INTO PCB TRAM CPU (ITEM 51).
8. INSERT LONGER PIN SIDE INTO ITEM 51. PINS MUST EXTEND BEYOND MATING CONNECTOR ON ITEM 51 WHEN ASSEMBLED.

2 of 2

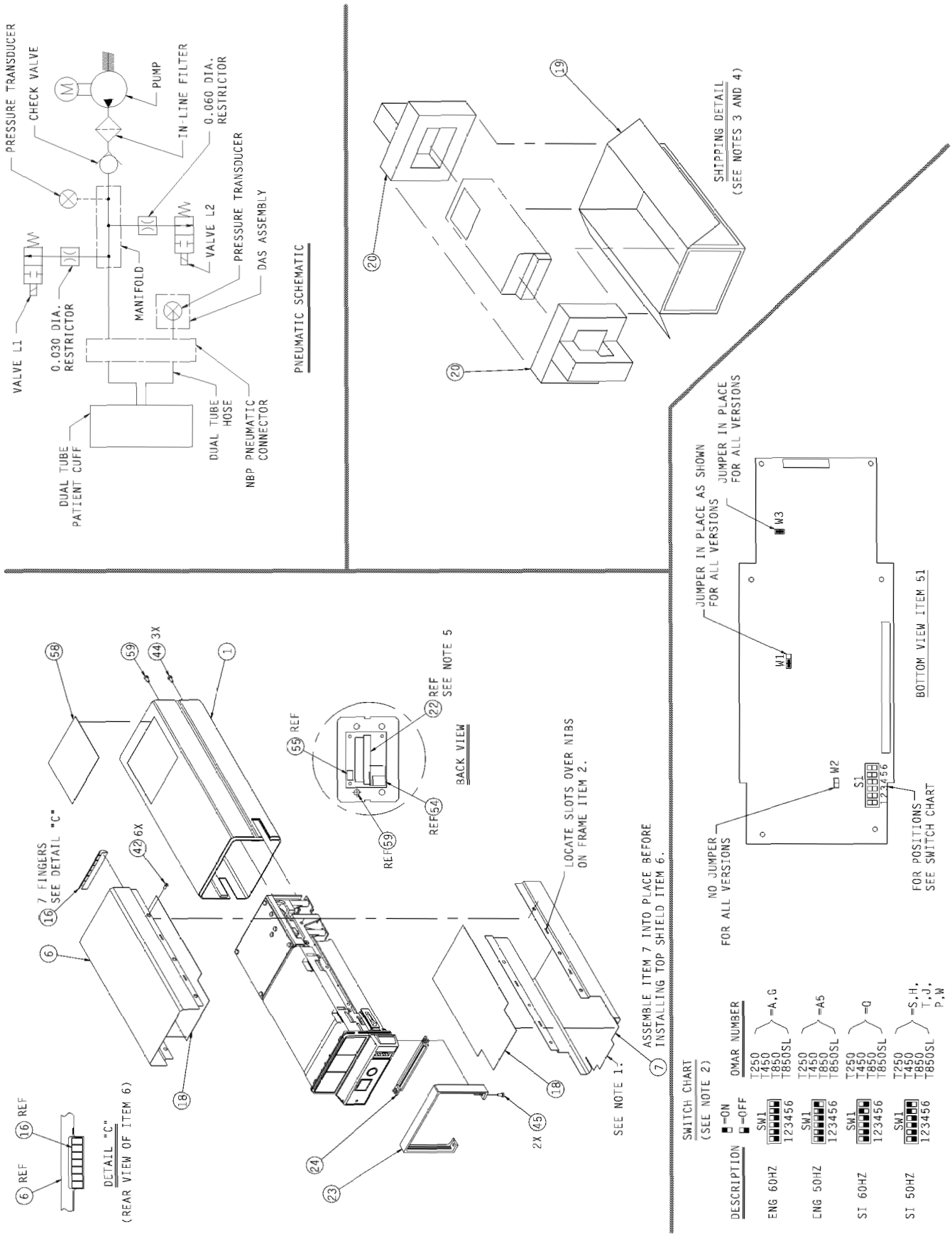
PRESSURE TRANSDUCER
CHECK VALVE
PUMP
IN-LINE FILTER
0.060 DIA. RESTRICTOR
PRESSURE TRANSDUCER
VALVE L2
DAS ASSEMBLY
MANIFOLD
VALVE L1
0.030 DIA. RESTRICTOR
DUAL TUBE PATIENT CUFF
DUAL TUBE HOSE
NBP PNEUMATIC CONNECTOR
PNEUMATIC SCHEMATIC
SHIPPING DETAIL
(SEE NOTES 3 AND 4)
JUMPER IN PLACE AS SHOWN FOR ALL VERSIONS
JUMPER IN PLACE FOR ALL VERSIONS
W3
W1
W2
S1
123456
BOTTOM VIEW ITEM 51
NO JUMPER FOR ALL VERSIONS
FOR POSITIONS SEE SWITCH CHART
7 FINGERS SEE DETAIL "C"
6X
3X
REF SEE NOTE 5
BACK VIEW
REF
REF
REF
LOCATE SLOTS OVER NIBS ON FRAME ITEM 2.
ASSEMBLE ITEM 7 INTO PLACE BEFORE INSTALLING TOP SHIELD ITEM 6.
SEE NOTE 1.
2X
REF
REF
DETAIL "C"
(REAR VIEW OF ITEM 6)
SWITCH CHART
(SEE NOTE 2)
■=ON
□=OFF
DESCRIPTION
OMAR NUMBER
ENG 60HZ
SW1
123456
T250
T450
T850
T850SL
=A,G
ENG 50HZ
=A5
SI 60HZ
=Q
SI 50HZ
=S,H,T,J,P,W

Schematic Diagram PN 412658-001H

1 of 2

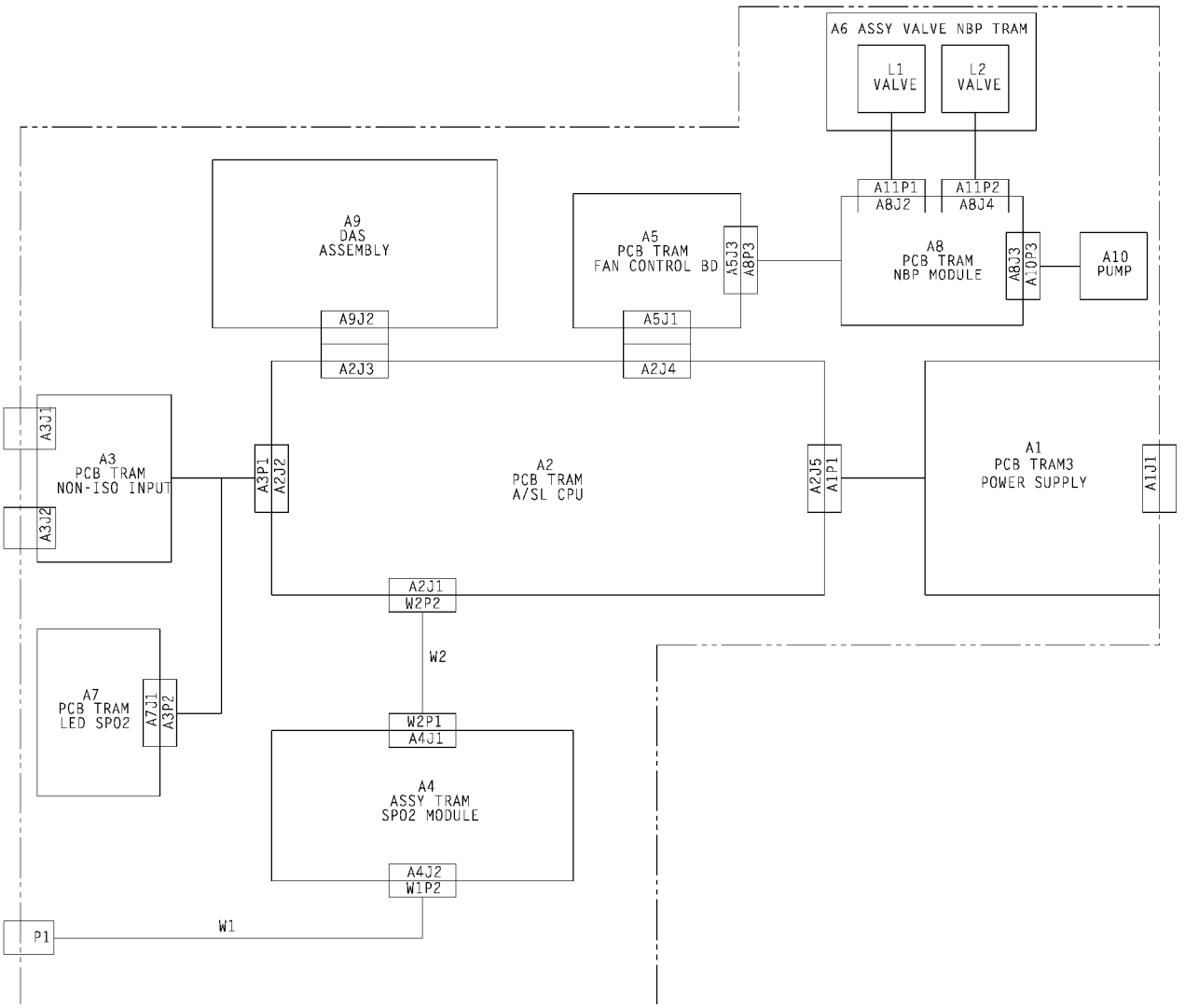

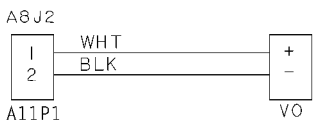

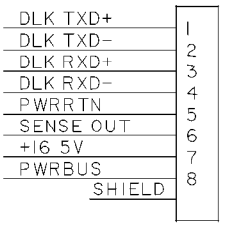

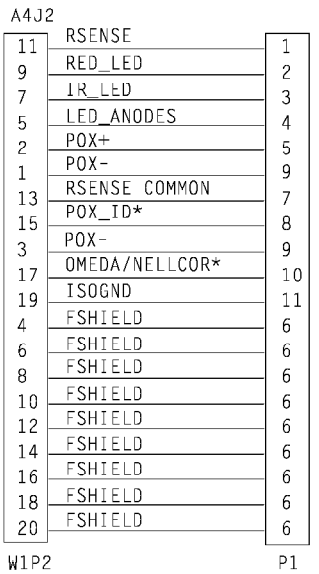

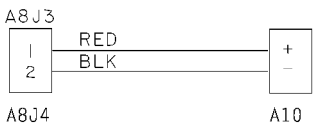

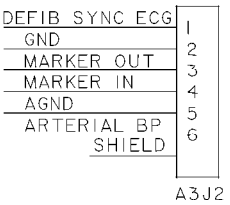

2 of 2

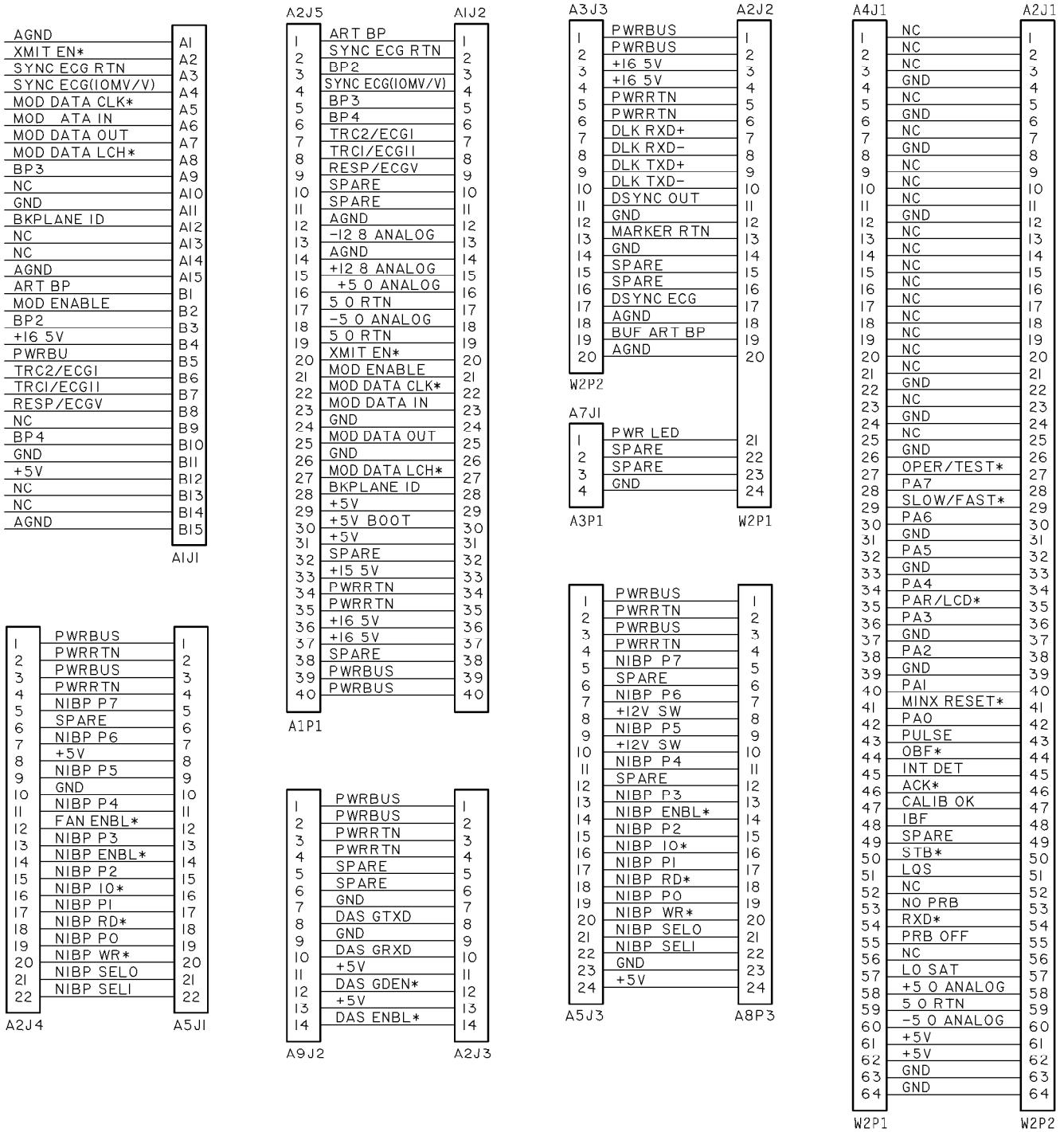
A1J1
AGND
XMIT EN*
SYNC ECG RTN
SYNC ECG(10MV/V)
MOD DATA CLK*
MOD ATA IN
MOD DATA OUT
MOD DATA LCH*
BP3
NC
GND
BKPLANE ID
NC
NC
AGND
ART BP
MOD ENABLE
BP2
+16 5V
PWRBU
TRC2/ECGI
TRCI/ECGII
RESP/ECGV
NC
BP4
GND
+5V
NC
NC
AGND
A2J5
A1J2
ART BP
SYNC ECG RTN
BP2
SYNC ECG(10MV/V)
BP3
BP4
TRC2/ECGI
TRCI/ECGII
RESP/ECGV
SPARE
SPARE
AGND
-12 8 ANALOG
AGND
+12 8 ANALOG
+5 0 ANALOG
5 0 RTN
-5 0 ANALOG
5 0 RTN
XMIT EN*
MOD ENABLE
MOD DATA CLK*
MOD DATA IN
GND
MOD DATA OUT
GND
MOD DATA LCH*
BKPLANE ID
+5V
+5V BOOT
+5V
SPARE
+15 5V
PWRRTN
PWRRTN
+16 5V
+16 5V
SPARE
PWRBUS
PWRBUS
A1P1
A3J3
A2J2
PWRBUS
PWRBUS
+16 5V
+16 5V
PWRRTN
PWRRTN
DLK RXD+
DLK RXD-
DLK TXD+
DLK TXD-
DSYNC OUT
GND
MARKER RTN
GND
SPARE
SPARE
DSYNC ECG
AGND
BUF ART BP
AGND
W2P2
A7J1
PWR LED
SPARE
SPARE
GND
A3P1
W2P1
A4J1
A2J1
NC
NC
NC
GND
NC
GND
NC
GND
NC
NC
NC
GND
NC
NC
NC
NC
NC
NC
NC
NC
GND
NC
GND
NC
GND
OPER/TEST*
PA7
SLOW/FAST*
PA6
GND
PA5
GND
PA4
PAR/LCD*
PA3
GND
PA2
GND
PAI
MINX RESET*
PA0
PULSE
OBF*
INT DET
ACK*
CALIB OK
IBF
SPARE
STB*
LQS
NC
NO PRB
RXD*
PRB OFF
NC
LO SAT
+5 0 ANALOG
5 0 RTN
-5 0 ANALOG
+5V
+5V
GND
GND
W2P1
W2P2
A2J4
A5J1
PWRBUS
PWRRTN
PWRBUS
PWRRTN
NIBP P7
SPARE
NIBP P6
+5V
NIBP P5
GND
NIBP P4
FAN ENBL*
NIBP P3
NIBP ENBL*
NIBP P2
NIBP 10*
NIBP PI
NIBP RD*
NIBP PO
NIBP WR*
NIBP SELO
NIBP SELI
A9J2
A2J3
PWRBUS
PWRBUS
PWRRTN
PWRRTN
SPARE
SPARE
GND
DAS GTXD
GND
DAS GRXD
+5V
DAS GDEN*
+5V
DAS ENBL*
A5J3
A8P3
PWRBUS
PWRRTN
PWRBUS
PWRRTN
NIBP P7
SPARE
NIBP P6
+12V SW
NIBP P5
+12V SW
NIBP P4
SPARE
NIBP P3
NIBP ENBL*
NIBP P2
NIBP 10*
NIBP PI
NIBP RD*
NIBP PO
NIBP WR*
NIBP SELO
NIBP SELI
GND
+5V

Parts List PN 412658-001H

Item	Reference Designation	Parts List	Part Number	Qty
1		Cover, Module	400895-001	1
2		Frame	400982-001	1
3	A1	Power Supply PCB	401309-002	1
4	A3	Non-Isolated Input PCB	401315-002	1
5		Tubing, Silastic	401582-001	AR
6		Shield, Top	401679-001	1
7		Shield, Bottom	401679-002	1
8		Latch	401682-001	2
9		Button, Latch	402106-001	2
10		Screw, Shoulder	402214-001	4
11		Spring, Compression	402315-001	2
12		Plate, Chassis Ground, Bottom/Front	402317-001	1
13		Pin, Latch	402806-001	2
14	A7	Power Indicator PCB	403170-011	1
15	A5	Fan PCB Assembly	403549-002	1
16		Spring, Chassis Ground, Rear	403741-001	AR
17		Screw, BDGH, Phillips, 4-40 x 7/8	404069-001	2
18		Insulator, Bottom Shield	404188-001	2
19		Carton, Shipping	404211-003	1
20		Foam, Insert	404211-004	
21		Bracket, NBP Mounting	404296-001	1
22		Label, Blank	404525-006	1
23		Trim, Rubber, Front Bezel	404620-001	1
24		Mounting Strap, Trim	404621-001	1
25		Check Valve, 0.125 ID	404675-001	1
26		Filter, 43 Micron	404679-001	1
27		Plate, Chassis Ground, Rear	404680-002	1
28		Grommet, 1/4 Dia, 1/8 High, 1/16 Panel Thickness	404749-001	5
29		Spring, Flat, SST	405041-001	2
30		Spring, Latch	406019-001	2
31		Pin, Latch	406037-001	2
32		Bracket, Power Supply PCB	406254-001	1
33	W2	Connector, Header, Dual, 64-Pin	407452-002	1
34	A10	Pump Assembly, NBP, w/Harness	408169-002	1
35	A9	800 Acquisition Module, 10-Lead	417123-001	1
36		Front Bezel, Tram	402659-001	1
37	A6	NBP Valve Assembly	416153-001	1
38		Label, Pulse Oximetry, Nellcor	413831-002	1
39	A4	Pulse Oximetry Assembly (Including Pulse Oximetry PCB, PN 800674-00X)	414409-001	1
40		Screw, BDGH, Phillips, 4-40 x 3/16	4502-406	2

Item	Reference Designation	Parts List	Part Number	Qty
41		Screw, BDGH, Phillips, 4-40 x 1-1/4	4502-440	4
42		Screw, FLH, 100˚, Phillips, SST, 4-40 x 3/16	4505-406	6
43		Screw, FLH, Phillips, SST, 4-40 x 3/8	4505-412	2
44		Screw, BDGH, Phillips, 4-40 x 3/16	45074-406	16
45		Screw, BDGH, Phillips, 4-40 x 3/8	45074-412	2
46		Screw, BDGH, Phillips, 4-40 x 5/8	45074-420	2
47		Screw, BDGH, Phillips, 4-40 x 3/4	45074-424	4
48		Nut, Hex, 4-40	4521-304	2
49		Tie Wrap	4535-002	1
50		Adhesive, Diecut, Front Right	415098-003	1
51	A2	Module Processor PCB	800210-005	1
52	A8	NPB PCB	800316-002	1
53	W1	Harness, Pulse Oximetry PCB-to-Connector	800892-001	1
54		Label, UL Listed	40230-003	1
55		Label, 60 Hertz	411091-018	1
55		Label, 50 Hertz	411091-019	1
56		Label, Top, English (Determined by Destination)	411091-009	1
56		Label, Top, German (Determined by Destination)	411091-010	1
56		Label, Top, French (Determined by Destination)	411091-011	1
56		Label, Top, Swedish (Determined by Destination)	411091-012	1
56		Label, Top, Spanish (Determined by Destination)	411091-013	1
56		Label, Top, Italian (Determined by Destination)	411091-014	1
56		Label, Top, Dutch (Determined by Destination)	411091-015	1
57		Label, Front, 850SL, English (Determined by Destination)	413842-001	1
57		Label, Front, 850SL, German (Determined by Destination)	413842-002	1
57		Label, Front, 850SL, French (Determined by Destination)	413842-003	1
57		Label, Front, 850SL, Swedish (Determined by Destination)	413842-004	1
57		Label, Front, 850SL, Spanish (Determined by Destination)	413842-005	1
57		Label, Front, 850SL, Italian (Determined by Destination)	413842-006	1
57		Label, Front, 850SL, Dutch (Determined by Destination)	413842-007	1
58		Label, Cover, English (Determined by Destination)	414052-001	1
58		Label, Cover, German (Determined by Destination)	414052-002	1
58		Label, Cover, French (Determined by Destination)	414052-003	1
58		Label, Cover, Swedish (Determined by Destination)	414052-004	1
58		Label, Cover, Spanish (Determined by Destination)	414052-005	1
58		Label, Cover, Italian (Determined by Destination)	414052-006	1
58		Label, Cover, International (Determined by Destination)	414052-007	1

Item	Reference Designation	Parts List	Part Number	Qty
59		Screw, PHD, 4-40 x 0.188, Modified (Determined by Destination)	409009-001	1
59		Screw, PHD, 4-40 x 0.188 (Determined by Destination)	45074-406	1
60		Adhesive, Diecut, Front Left	415098-002	1
61		Tram 100 - 850 A and SL Module Service Manual	404422-065	1
62		Label, CE Mark	408230-008	1
63		PC Post, 2 x 7	412062-004	1
64		PC Post, 2 x 11	412062-005	1
65		Spring, Chassis Ground, Small	414610-001	AR

Assembly Revisions PN 412658

The baseline revision for this assembly is pn 412658-001H. To convert the parts list back to a previous revision, change all part numbers, descriptions, and quantities as indicated in the revision tables given below.

PN 412658-001A

Item	Reference Designation	Description	Revision's Part Number	Baseline Part Number	Qty
35	A9	DAS 800SL Module, 10-Lead	411025-001	417123-001	1
37	A6	NBP Valve Assembly	413021-001	416153-001	1
50		Adhesive, Loctite Prism 411	4851-082	415098-001	AR
51		Module Processor PCB	800210-002	800210-005	1
52	A8	NBP PCB	800316-001	800316-002	1
59		Spring, Chassis Ground, Small	Not Used	414610-001	AR
60		Adhesive, Diecut Front Left	Not Used	415098-002	1
62		Label, CE Mark	Not Used	408230-008	1
63		PC Post, 2 x 7	Not Used	412062-004	1
64		PC Post, 2 x 11	Not Used	412062-005	1

PN 412658-001B

This revision was a documentation change that does not affect this manual.
Refer to pn 412658-001A for changes to the parts list.

PN 412658-001C

Item	Reference Designation	Description	Revision's Part Number	Baseline Part Number	Qty
35	A9	DAS 800SL Module, 10-Lead	411025-001	417123-001	1
37	A6	NBP Valve Assembly	413021-001	416153-001	1
51		Module Processor PCB	800210-002	800210-005	1
52	A8	NBP PCB	800316-001	800316-002	1
62		Label, CE Mark	Not Used	408230-008	1
63		PC Post, 2 x 7	Not Used	412062-004	1
64		PC Post, 2 x 11	Not Used	412062-005	1

PN 412658-001D

This revision was a documentation change that does not affect this manual.
Refer to pn 412658-001C for changes to the parts list.

PN 412658-001E

This revision was a documentation change that does not affect this manual.
Refer to pn 412658-001C for changes to the parts list.

PN 412658-001F

Item	Reference Designation	Description	Revision's Part Number	Baseline Part Number	Qty
35	A9	DAS 800SL Module, 10-Lead	411025-001	417123-001	1
37	A6	NBP Valve Assembly	413021-001	416153-001	1
52	A8	NBP PCB	800316-001	800316-002	1

PN 412658-001G

Item	Reference Designation	Description	Revision's Part Number	Baseline Part Number	Qty
35	A9	DAS 800SL Module, 10-Lead	411025-001	417123-001	1
52	A8	NBP PCB	800316-001	800316-002	1

17 100/200 ACQUISITION MODULE PN 408134/411166/417120

General **17-2**
Safety 17-2
Assembly Configurations 17-2

Exploded View PN 418134-001A/002A **17-3**

Schematic Diagram PN 408134-001A/002A **17-4**

Parts List PN 408134-001A/002A **17-5**

Exploded View PN 411166-001B **17-6**

Schematic Diagram PN 411166-001B **17-7**

Parts List PN 411166-001B **17-8**

Exploded View PN 417120-001B **17-9**

Schematic Diagram PN 417120-001B **17-10**

Parts List PN 417120-001B **17-11**

General

Safety

Observe the following warning:

WARNING
The DAS module contains the isolation barrier between the patient and the rest of the module. If the data acquisition module is removed, repaired, or replaced for any reason, the module must undergo the current leakage and hi-pot tests listed in Chapter 5: "Preventive Maintenance" before being used on a patient. These tests verify the integrity of the isolation barrier, and are necessary to ensure continued safe operation. Failure to perform the tests may cause undue equipment failure and possible health hazards.

Assembly Configurations

There are four configurations of the DAS module described in this chapter. The difference between the assemblies is in the number of ECG leadwires monitored and the acquisition processor PCB used in the DAS module itself. Use the table below to determine which parts lists to use in this manual for your Tram module.

Table 17-1. DAS Module Configurations

Module Type	Leadwire Configuration	Acquisition Module	Acquisition Processor PCB
Tram 100A	5-Leadwire	408134-001	800330-005
Tram 200A	5-Leadwire	408134-002	800330-006
Tram 200SL	10-Leadwire	411166-001	800330-006
Tram 200SL	10-Leadwire	417120-001 (Replaced 411166-001)	801040-001
Tram 250SL	10-Leadwire	411166-001	800330-006
Tram 250SL	10-Leadwire	417120-001 (Replaced 411166-001)	801040-001

Exploded View PN 418134-001A/002A

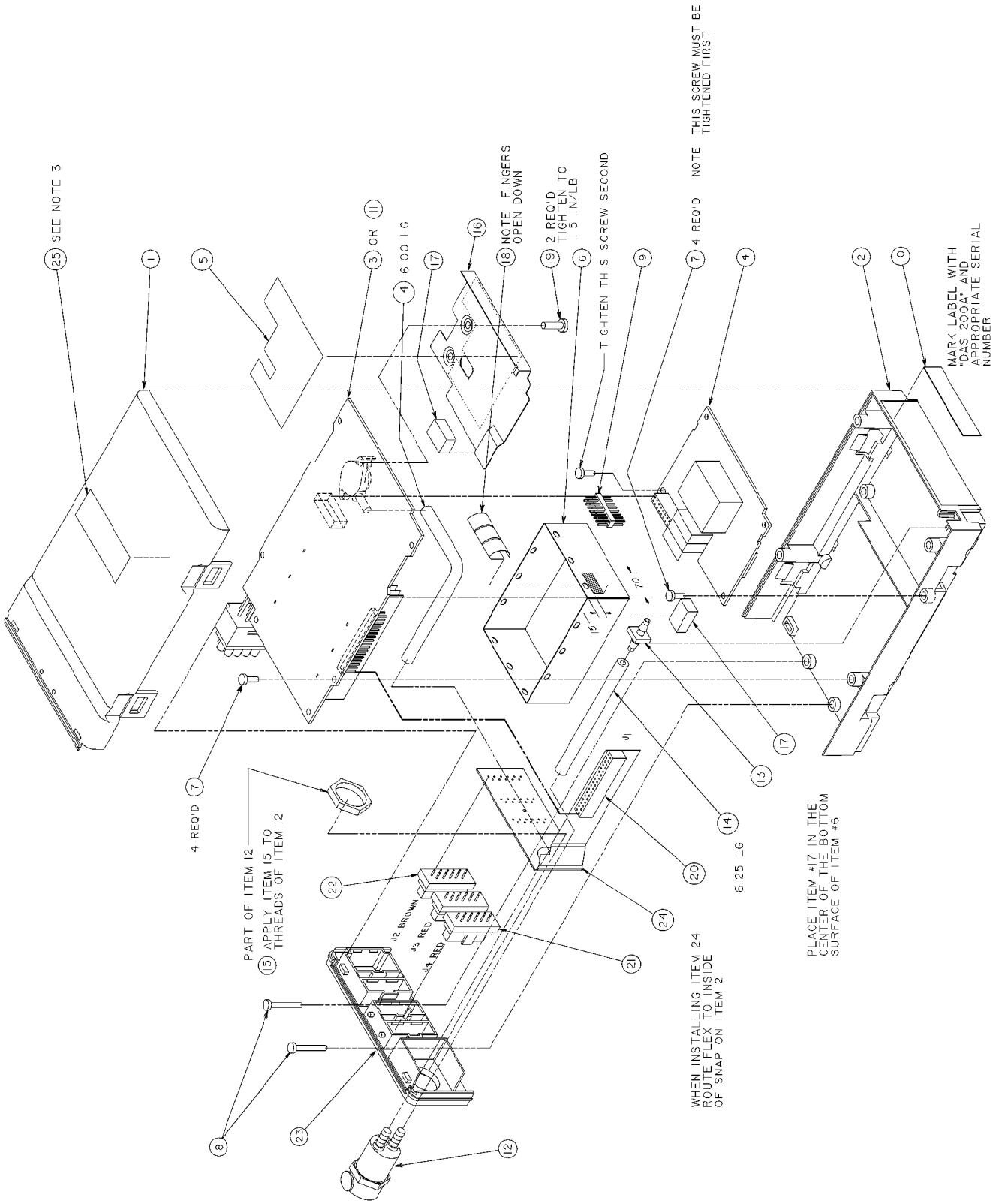

Schematic Diagram PN 408134-001A/002A

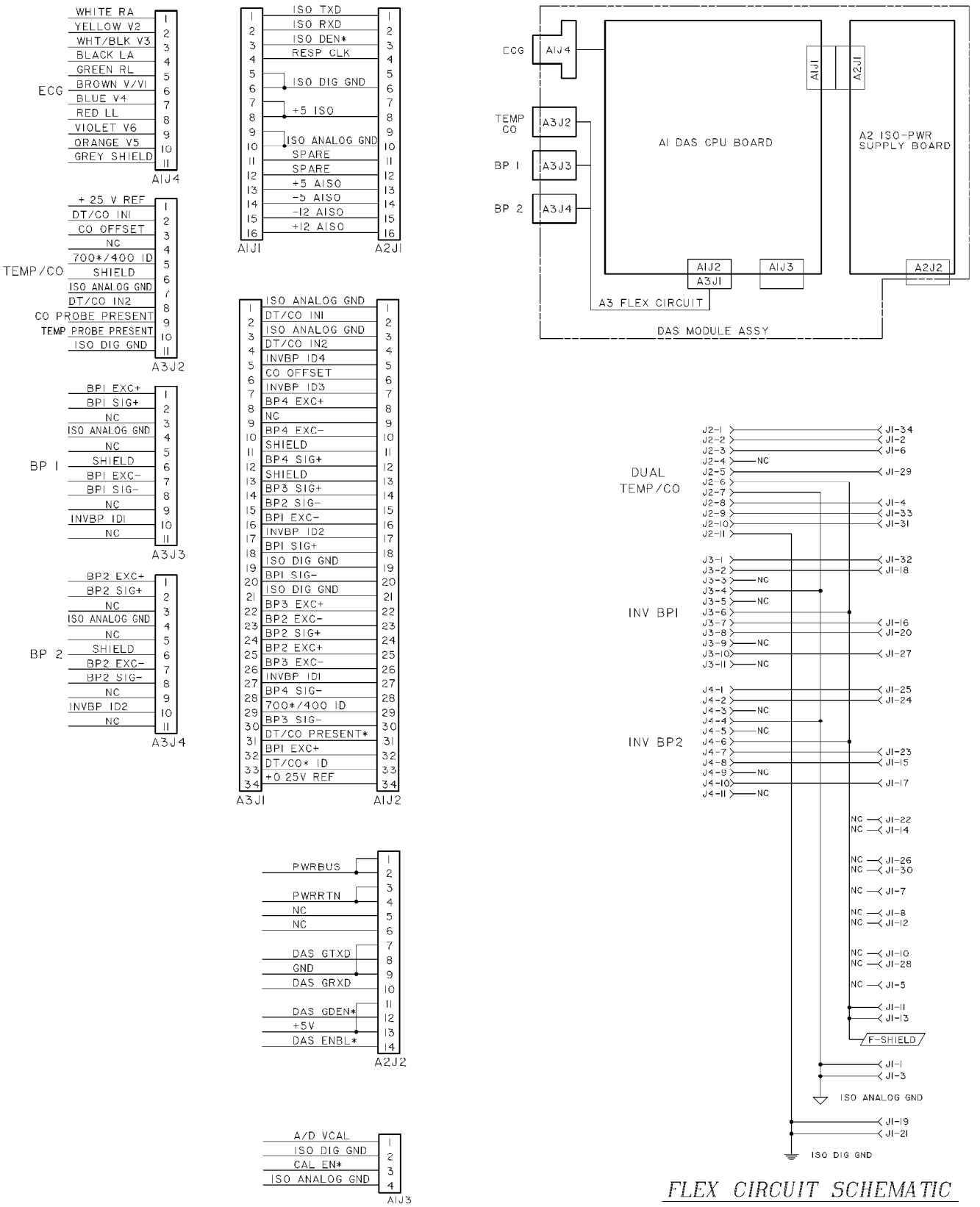

Parts List PN 408134-001A/002A

Item	Reference Designation	Parts List	Part Number	Qty
1		Cover, Top	401311-001	1
2		Cover, Lower	401681-001	1
3	A1	Acquisition Processor PCB, 5-Lead, 2-BP, W/NBP (For PN 408134-001 Only)	800330-005	1
4	A2	Isolated Power Supply PCB	402329-002	1
5		Insulator	408417-001	1
6		Shield, Hybrids	403283-002	1
7		Screw, BDGH, Phillips, 4-40 x 3/16	45074-406	8
8		Screw, 4-40 x 7/8	404069-001	2
9	A1J1, A2J1	Header, Vertical, 16-Pin	1778-916	1
10		Label, Model/Serial Number	404525-006	1
11	A1	Acquisition Processor PCB, 10-Lead, 2-BP, W/NBP (For PN 408134-002 Only)	800330-006	1
12		Connector, Pneumatic, NBP	401184-001	1
13		Connector, Pneumatic	404445-001	1
14		Tubing, Silastic	401582-001	AR
15		Adhesive, Permabond 910FS	4851-074	AR
16		Shield, Acquisition Processor PCB, Lower	405517-001	1
17		Tape, Foam	4819-102	AR
18		Spring, Chassis Ground, Rear	403741-001	AR
19		Screw, BDGH, Phillips, 6-32 x 7/16	45074-918	2
20	A3J1	Connector, 34-Pin, Horizontal	17020-034	1
21	A3J3, A3J4	Connector, BP (Red)	401762-004	2
22	A3J2	Connector, TEMP/CO (Brown)	401762-021	1
23		Isolated Connector Panel, Tram 100/200	402159-002	1
24	A3	Flex Circuit, BP/Temp	404109-002	1
25		Label (Marked with “WARNING, TRAM TYPE MUST BE SET WHEN DAS MODULE IS EXCHANGED”)	404525-001	1

Exploded View PN 411166-001B

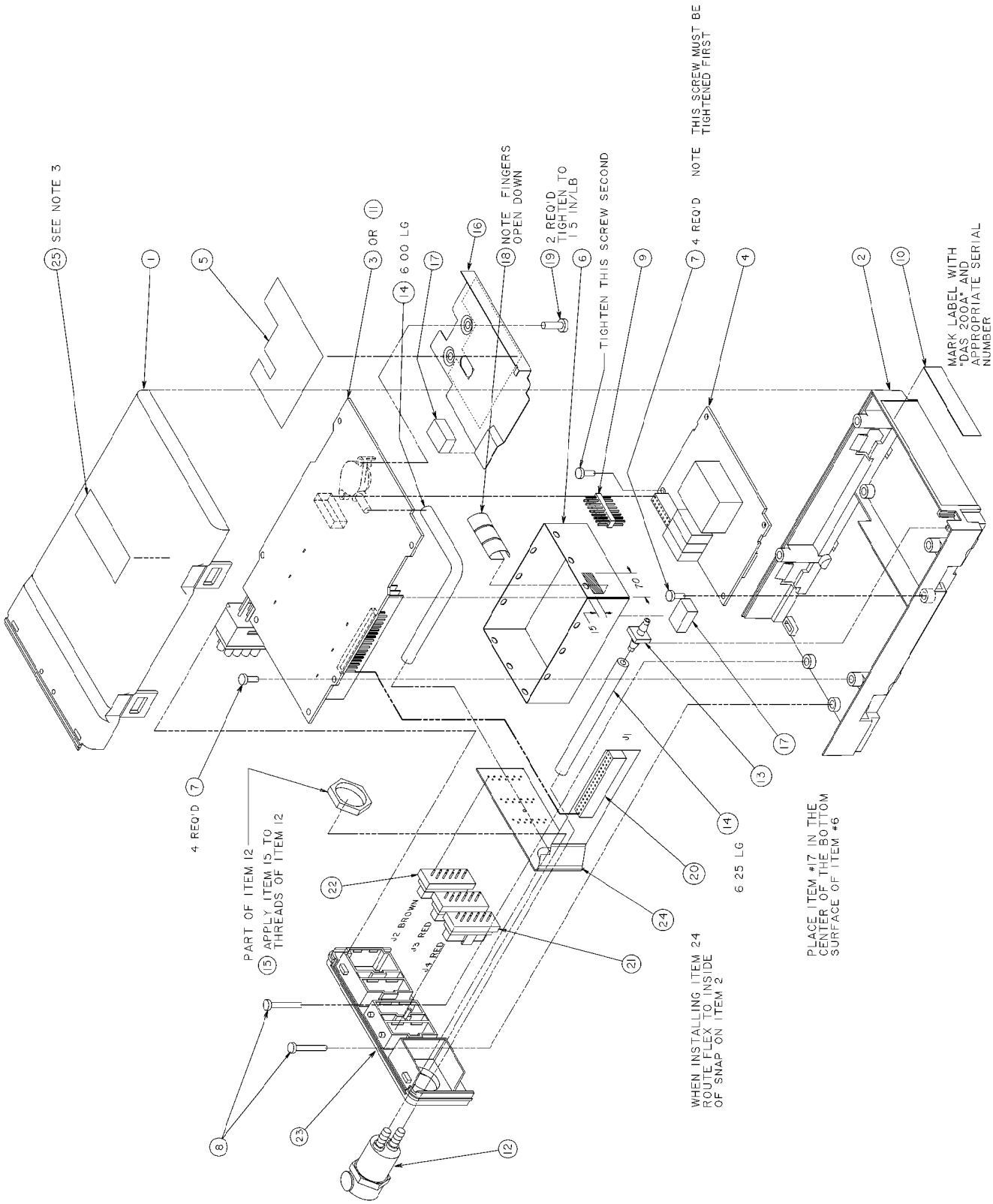

Schematic Diagram PN 411166-001B

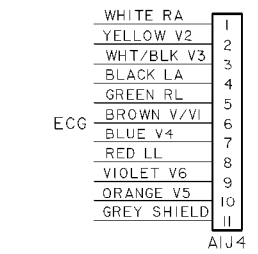

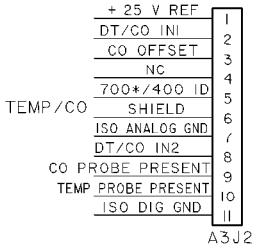

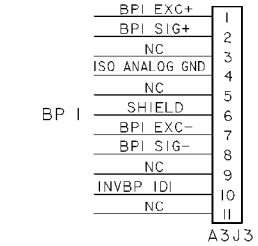

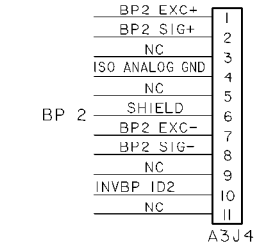

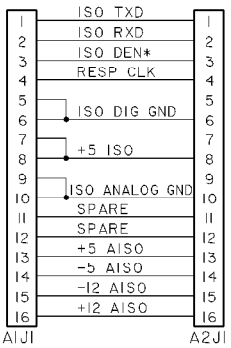

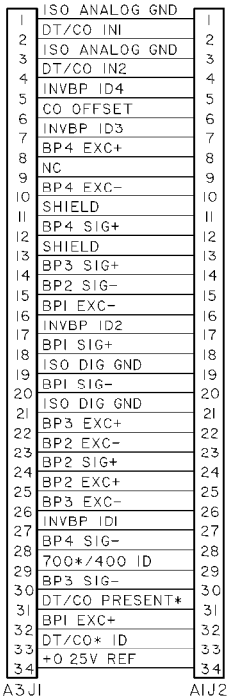

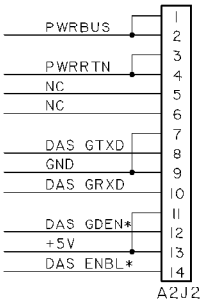

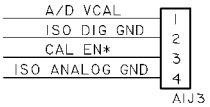

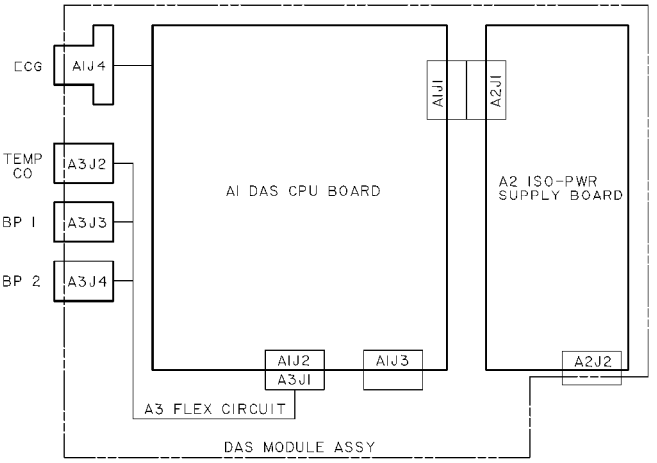

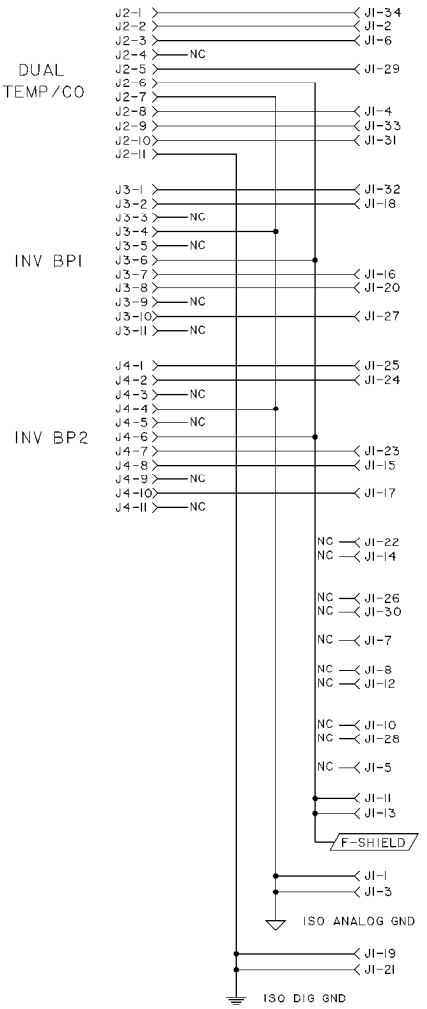

FLEX CIRCUIT SCHEMATIC

Parts List PN 411166-001B

Item	Reference Designation	Parts List	Part Number	Qty
1		Cover, Top	401311-001	0
2		Cover, Lower	401681-001	0
3	A1	Acquisition Processor PCB, 10-Lead, 2-BP, W/NBP	800330-006	1
4	A2	Isolated Power Supply PCB	402329-002	1
5		Insulator	408417-001	1
7		Screw, BDGH, Phillips, 4-40 x 3/16	45074-406	8
8		Screw, 4-40 x 7/8	404069-001	2
9		Header, Vertical, 16-Pin	1778-916	1
10		Label (Marked with "WARNING, TRAM TYPE MUST BE SET WHEN DAS MODULE IS EXCHANGED")	404525-001	2
12		Connector, Pneumatic, NBP	401184-001	1
13		Connector, Pneumatic	404445-001	1
14		Tubing, Silastic	401582-001	AR
15		Adhesive, Permabond 910FS	4851-074	AR
16		Shield, Acquisition Processor PCB, Lower	405517-001	1
17		Tape, Foam	4819-102	2
18		Spring, Chassis Ground, Rear	403741-001	AR
19		Screw, BDGH, Phillips, 6-32 x 1/2	45074-917	2
20		Connector, 34-Pin, Horizontal	17020-034	1
21		Connector, BP (Red)	401762-004	2
22		Connector, TEMP/CO (Brown)	401762-021	1
23		Isolated Connector Panel, Tram 100/200	402159-002	1
24	A3	Flex Circuit, BP/Temp	404109-002	1

Exploded View PN 417120-001B

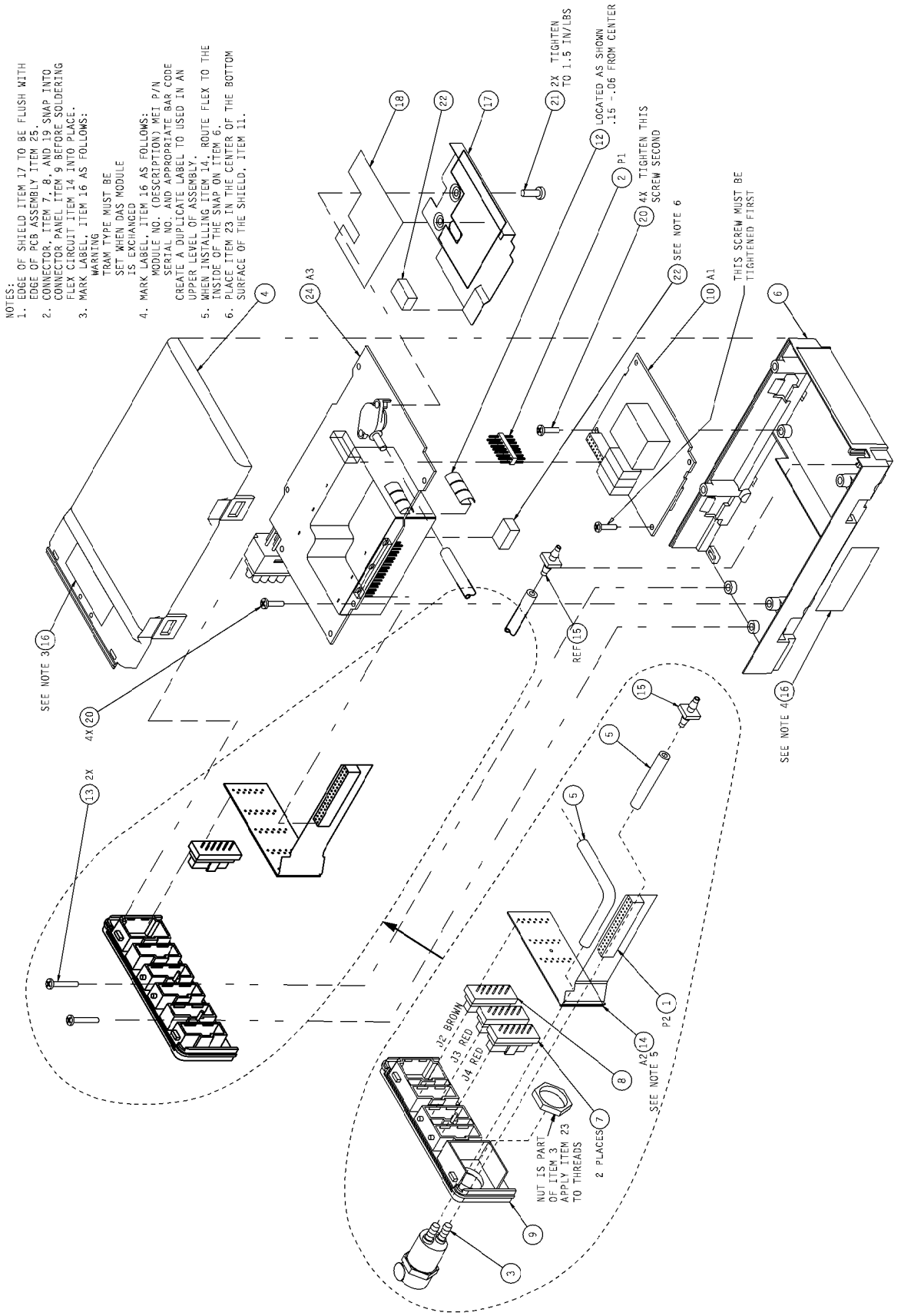

Schematic Diagram PN 417120-001B

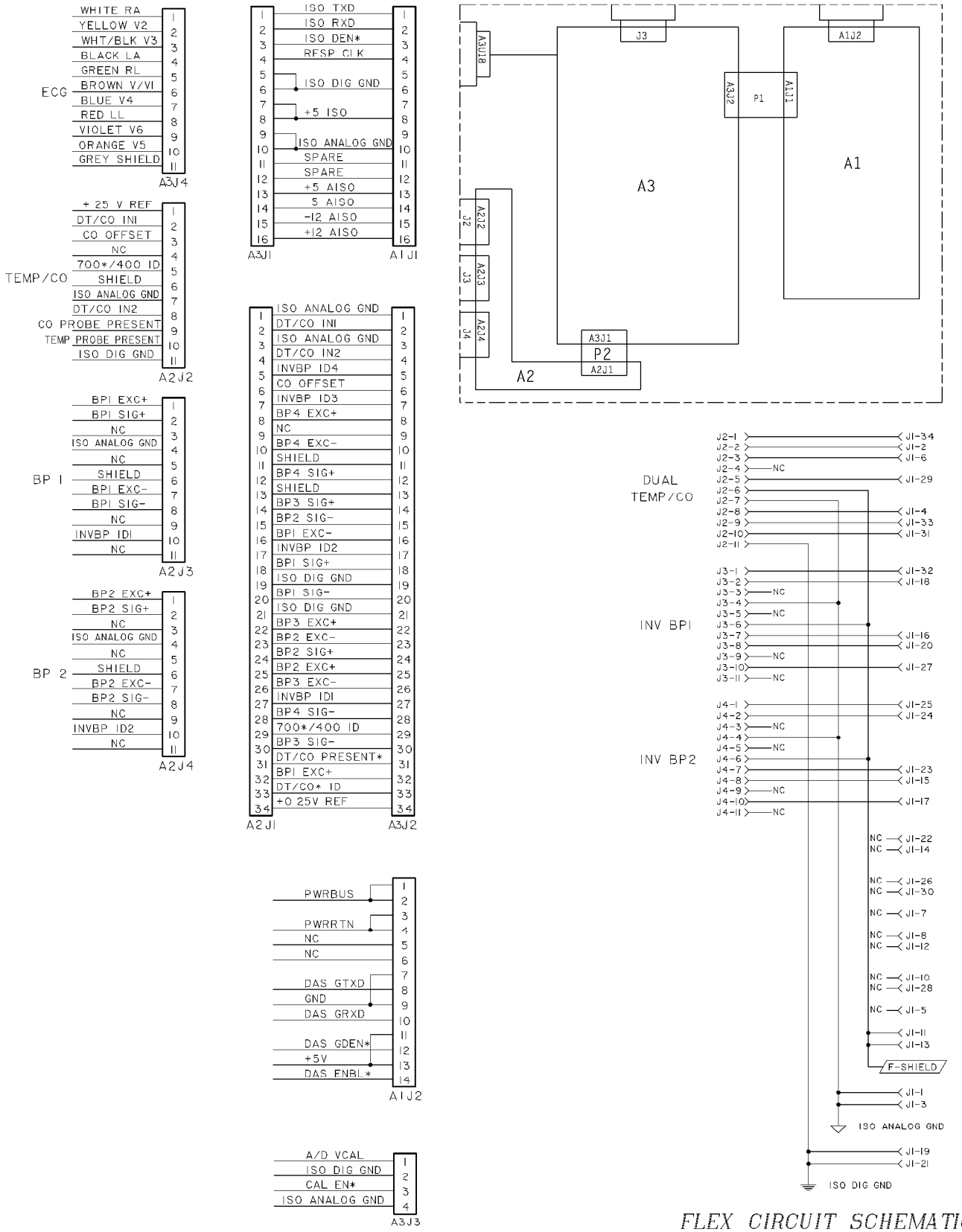

Parts List PN 417120-001B

Item	Reference Designation	Parts List	Part Number	Qty
1	P2	Connector, 34-Pin, Horizontal	17020-034	1
2	P1	Header, Vertical, 16-Pin	1778-916	1
3		Connector, Pneumatic, NBP	401184-001	1
4		Cover, Top	401311-001	1
5		Tubing, Silastic	401582-001	AR
6		Cover, Lower	401681-001	1
7		Connector, BP (Red)	401762-004	2
8		Connector, TEMP/CO (Brown)	401762-021	1
9		Isolated Connector Panel, Tram 100/200	402159-002	1
10	A1	Isolated Power Supply PCB	402329-002	1
12		Spring, Chassis Ground, Rear	403741-001	AR
13		Screw, 4-40 x 7/8	404069-001	2
14	A2	Flex Circuit, BP/Temp	404109-002	1
15		Connector, Pneumatic	404445-001	1
16		Label (Marked with “WARNING, TRAM TYPE MUST BE SET WHEN DAS MODULE IS EXCHANGED”)	404525-001	2
17		Shield, Acquisition Processor PCB, Lower	405517-001	1
18		Insulator	408417-001	1
20		Screw, BDGH, Phillips, 4-40 x 3/16	45074-406	8
21		Screw, BDGH, Phillips, 6-32 x 1/2	45074-917	2
22		Tape, Foam	4819-102	2
23		Adhesive, Permabond 910FS	4851-074	AR
24	A3	Acquisition Processor PCB, 10-Lead, 2-BP, W/NBP	801040-001	1

For your notes

18 400 ACQUISITION MODULE PN 410495/411167/417121

General **18-2**
Safety 18-2
Assembly Configurations 18-2

Exploded View PN 410495-001D **18-3**

Schematic Diagram PN 410495-001D **18-4**

Module Parts List PN 410495-001D **18-5**

Exploded View PN 411167-001C **18-6**

Schematic Diagram PN 411167-001C **18-7**

Parts List PN 411167-001C **18-8**

Exploded View PN 417121-001B **18-9**

Schematic Diagram PN 417121-001B **18-10**

Parts List PN 417121-001B **18-11**

General

Safety

Observe the following warning:

WARNING
The data acquisition module contains the isolation barrier between the patient and the rest of the module. If the data acquisition module is removed, repaired, or replaced for any reason, the module must undergo the current leakage and hi-pot tests listed in Chapter 5: "Preventive Maintenance" before being used on a patient. These tests verify the integrity of the isolation barrier, and are necessary to ensure continued safe operation. Failure to perform the tests may cause undue equipment failure and possible health hazards.

Assembly Configurations

There are three configurations of the data acquisition module described in this chapter. The difference between the assemblies is in the number of ECG leadwires monitored and the acquisition processor PCB used in the DAS module itself. Use the table below to determine which parts lists to use in this manual for your Tram module.

Table 18-1. DAS Module Configurations

Module Type	Leadwire Configuration	DAS Module	Acquisition Processor PCB
Tram 400A	5-Leadwire	410495-001	800330-009
Tram 400SL	10-Leadwire	411167-001	800330-010
Tram 400SL	10-Leadwire	417121-001 (Replaced 411167-001)	801040-001
Tram 450SL	10-Leadwire	411167-001	800330-010
Tram 450SL	10-Leadwire	417121-001 (Replaced 411167-001)	801040-001

Exploded View PN 410495-001D

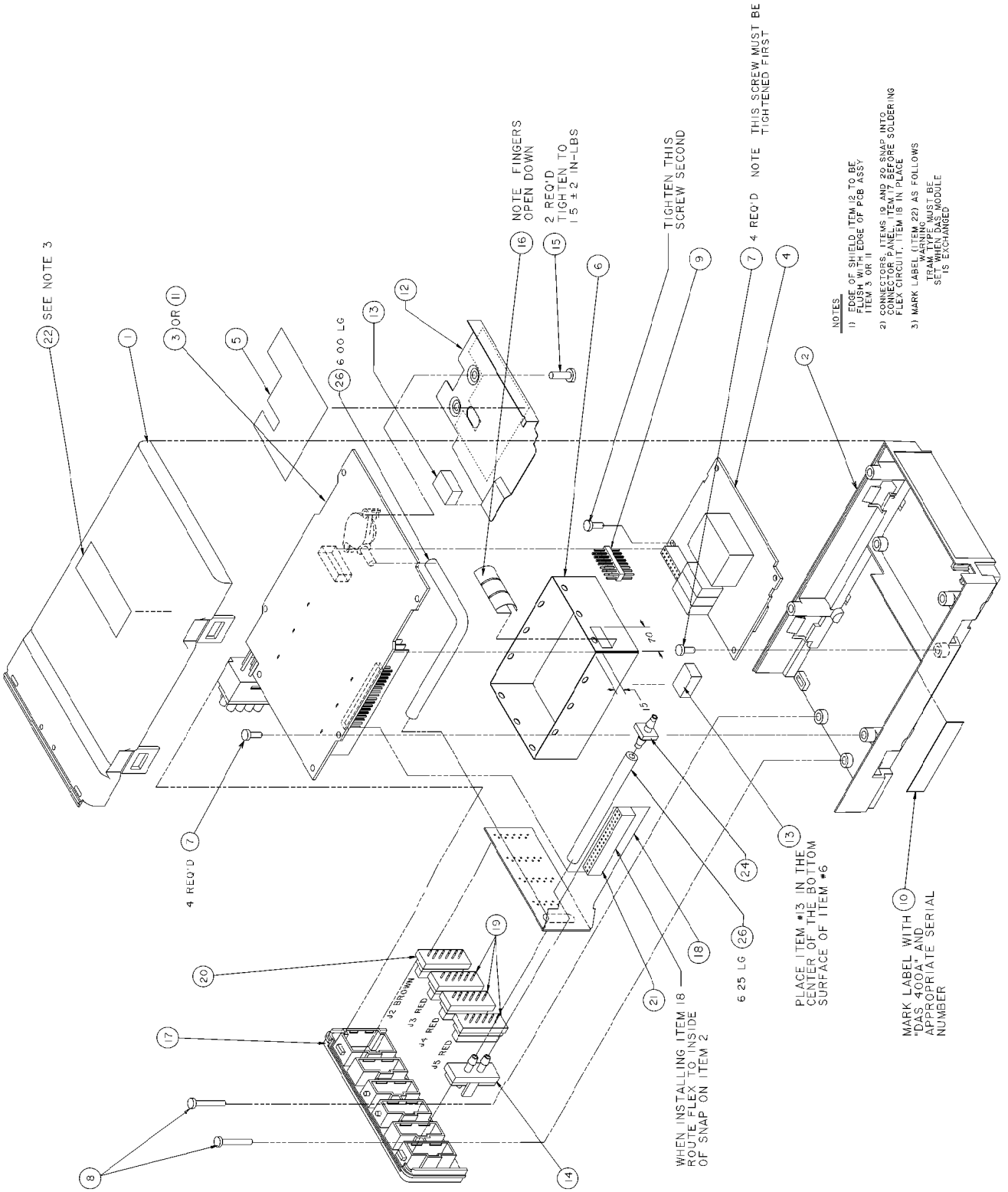

Schematic Diagram PN 410495-001D

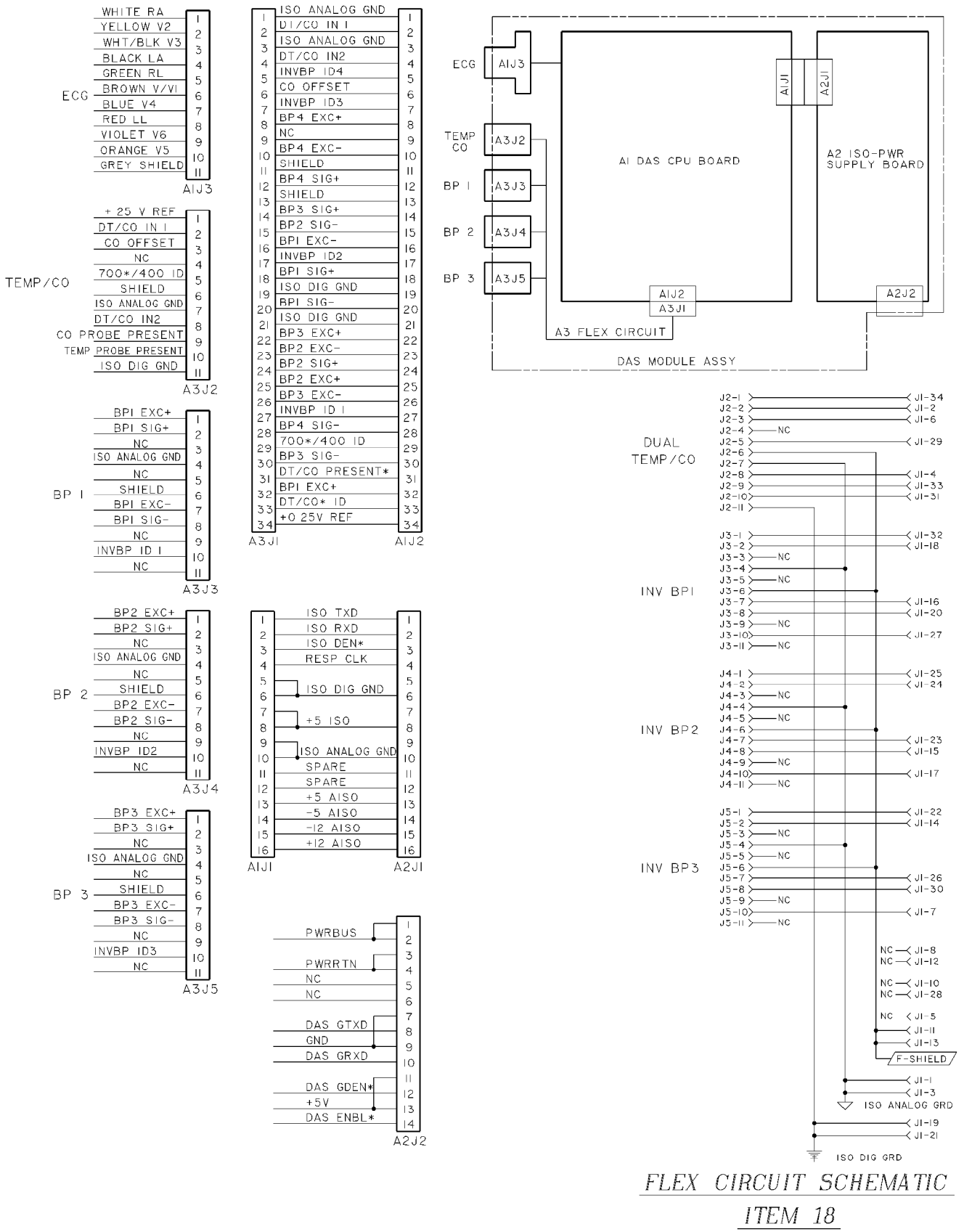

Module Parts List PN 410495-001D

Item	Reference Designation	Parts List	Part Number	Qty
1		Cover, Top	401311-001	1
2		Cover, Lower	401681-001	1
3	A1	Acquisition Processor PCB, 5-Lead, 3-BP, W/NBP	800330-009	1
4	A2	Isolated Power Supply PCB	402329-002	1
5		Insulator	408417-001	1
6		Shield, Hybrids	403283-002	1
7		Screw, BDGII, Phillips, 4-40 x 3/16	45074-406	8
8		Screw, 4-40 x 7/8	404069-001	2
9	A1J1, A2J1	Header, Vertical, 16-Pin	1778-916	1
10		Label, Model/Serial Number	404525-006	1
12		Shield, Acquisition Processor PCB, Lower	405517-001	1
13		Tape, Foam	4819-102	AR
14		NBP Connector Socket	414640-002	
15		Screw, BDGH, Phillips, 6-32 x 7/16	45074-918	2
16		Spring, Chassis Ground, Rear	403741-001	AR
17		Isolated Connector Panel, Tram 400/500/600 Module	402159-001	1
18	A3	Flex Circuit, BP/Temp	800397-002	1
19	A3J3, A3J4, A3J5	Connector, BP (Red)	401762-004	3
20	A3J2	Connector, TEMP/CO (Brown)	401762-021	1
21	A3J1	Connector, 34-Pin, Horizontal	17020-034	1
22		Label (Marked with “WARNING, TRAM TYPE MUST BE SET WHEN DAS MODULE IS EXCHANGED”)	404525-001	1
24		Connector, Pneumatic	404445-001	1
25		Fitting, Adapter, 10-32 to 1/8-Inch ID	4745-201	2
26		Tubing, Silastic	401582-001	AR

Exploded View PN 411167-001C

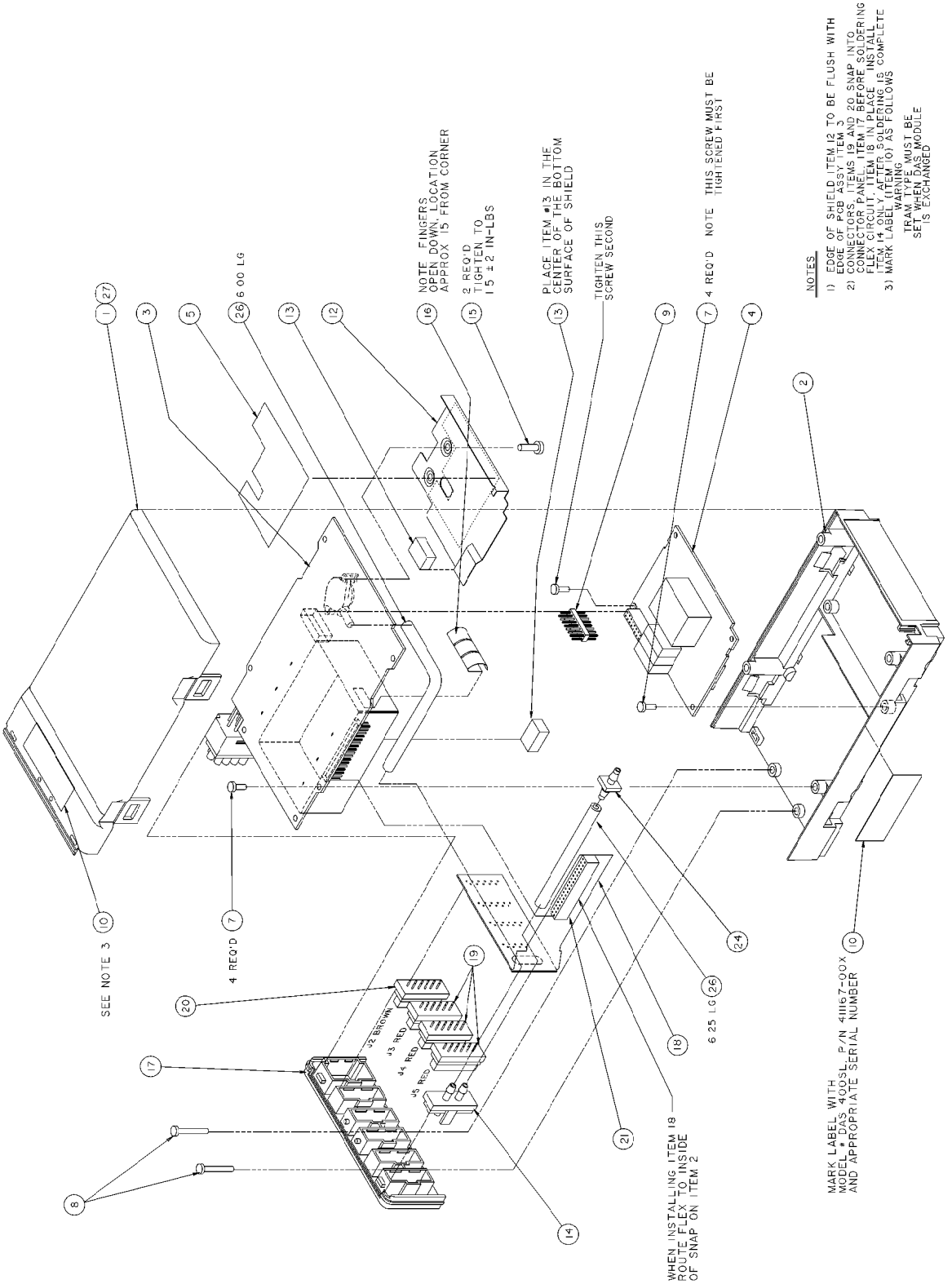

Schematic Diagram PN 411167-001C

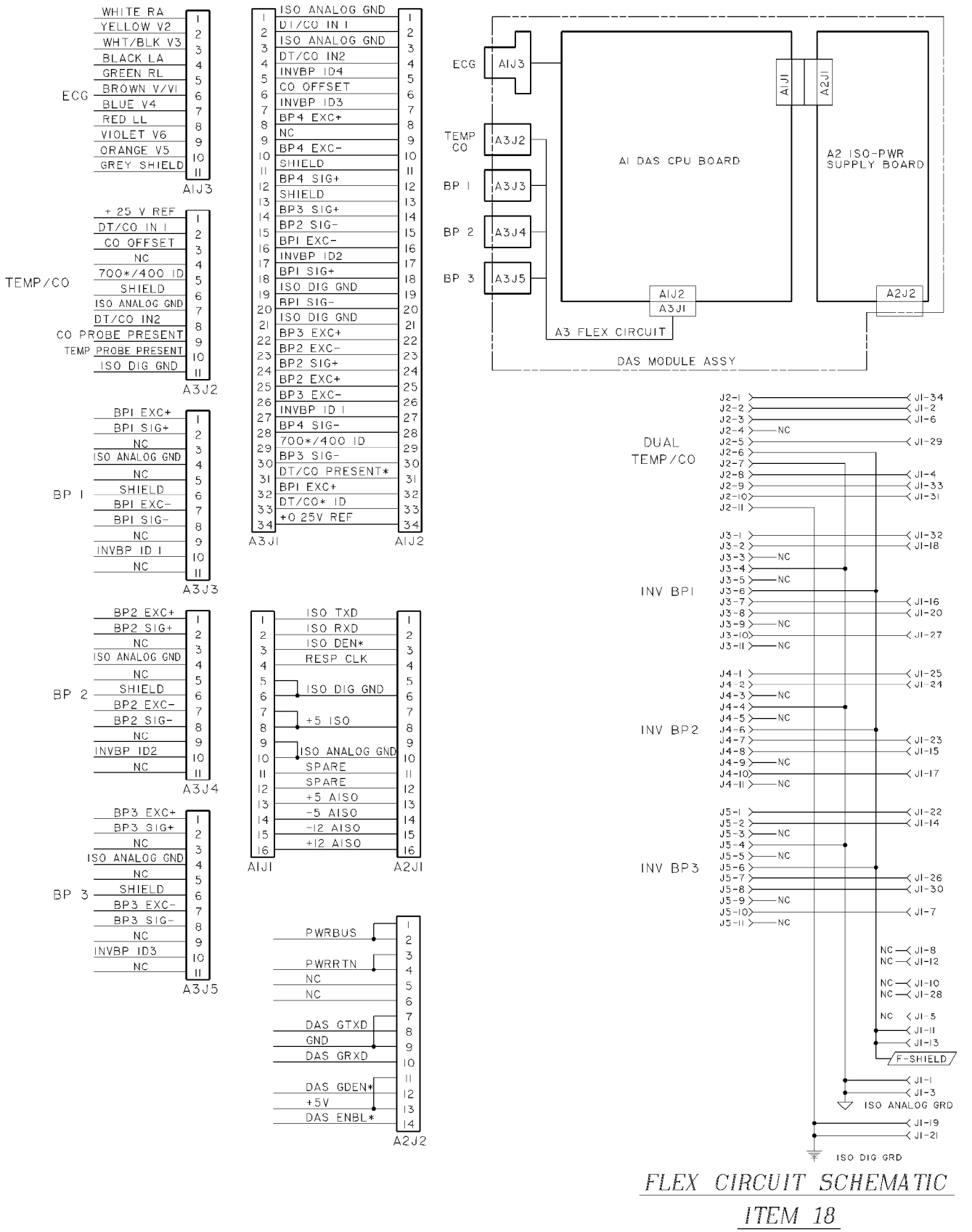

Parts List PN 411167-001C

Item	Reference Designation	Parts List	Part Number	Qty
1		Cover, Top	401311-001	0
2		Cover, Lower	401681-001	0
3	A1	Acquisition Processor PCB, 10-Lead, 3-BP, W/NBP	800330-010	1
4	A2	Isolated Power Supply PCB	402329-002	1
5		Insulator	408417-001	1
7		Screw, BDGH, Phillips, 4-40 x 3/16	45074-406	8
8		Screw, 4-40 x 7/8	404069-001	2
9		Header, Vertical, 16-Pin	1778-916	1
10		Label (Marked with “WARNING TRAM TYPE MUST BE SET WHEN DAS MODULE IS EXCHANGED”)	404525-001	2
12		Shield, Acquisition Processor PCB, Lower	405517-001	1
13		Tape, Foam	4819-102	2
14		Connector, Pneumatic, NBP, Recessed	409376-002	1
15		Screw, BDGH, Phillips, 6-32 x 1/2	45074-917	2
16		Spring, Chassis Ground, Rear	403741-001	AR
17		Isolated Connector Panel, Tram 400/500/600 Module	402159-001	1
18	A3	Flex Circuit, BP/Temp	800397-002	1
19		Connector, BP (Red)	401762-004	3
20		Connector, TEMP/CO (Brown)	401762-021	1
21		Connector, 34-Pin, Horizontal	17020-034	1
24		Connector, Pneumatic	404445-001	1
26		Tubing, Silastic	401582-001	AR

Exploded View PN 417121-001B

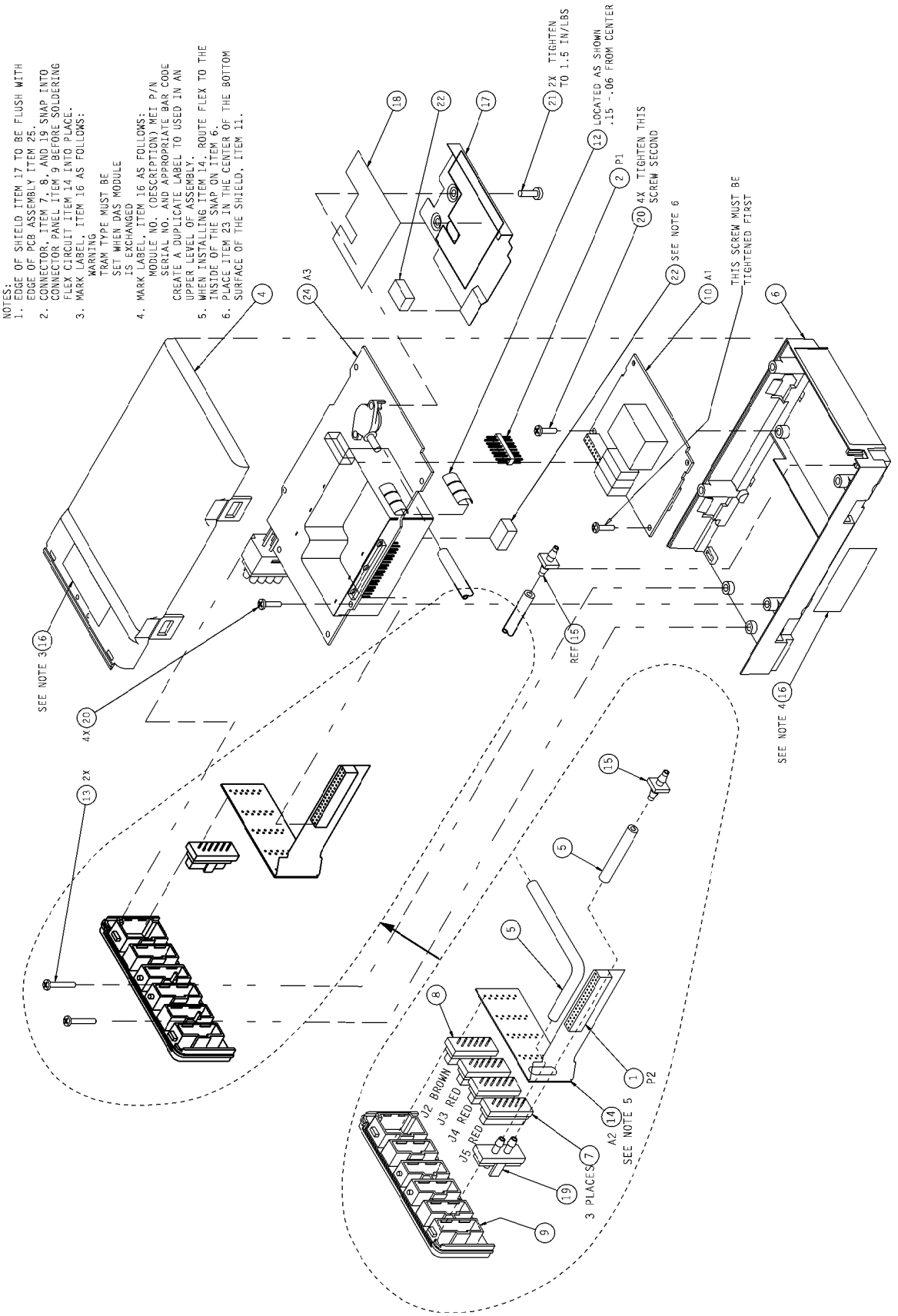

Schematic Diagram PN 417121-001B

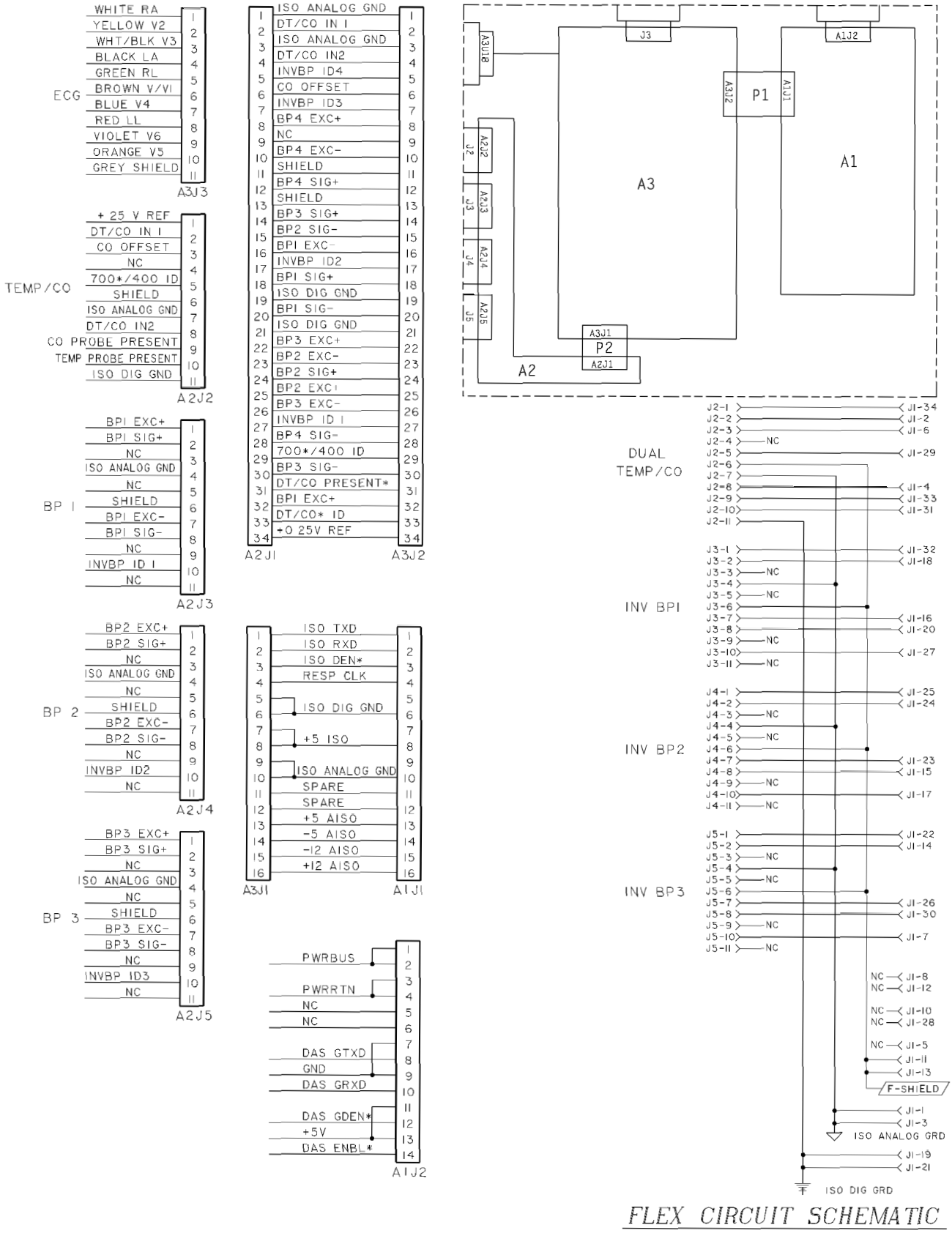

Parts List PN 417121-001B

Item	Reference Designation	Parts List	Part Number	Qty
1	P2	Connector, 34-Pin, Horizontal	17020-034	1
2	P1	Header, Vertical, 16-Pin	1778-916	1
4		Cover, Top	401311-001	1
5		Tubing, Silastic	401582-001	AR
6		Cover, Lower	401681-001	1
7		Connector, BP (Red)	401762-004	3
8		Connector, TEMP/CO (Brown)	401762-021	1
9		Isolated Connector Panel, Tram 400/500/600 Module	402159-001	1
10	A1	Isolated Power Supply PCB	402329-002	1
12		Spring, Chassis Ground, Rear	403741-001	AR
13		Screw, 4-40 x 7/8	404069-001	2
14	A2	Flex Circuit, BP/Temp	800397-002	1
15		Connector, Pneumatic	404445-001	1
16		Label (Marked with "WARNING, TRAM TYPE MUST BE SET WHEN DAS MODULE IS EXCHANGED")	404525-001	2
17		Shield, Acquisition Processor PCB, Lower	405517-001	1
18		Insulator	408417-001	1
19		Socket, NBP w/o Key	414640-002	1
20		Screw, BDGH, Phillips, 4-40 x 3/16	45074-406	8
21		Screw, BDGH, Phillips, 6-32 x 1/2	45074-917	2
22		Tape, Foam	4819-102	2
24	A3	Acquisition Processor PCB, 10-Lead, 2-BP, W/NBP	801040-001	1

For your notes

19 500/600 ACQUISITION MODULE PN 408133/411168/417122

General **19-2**
Safety 19-2
Assembly Configurations 19-2

Exploded View PN 408133-001A/002A **19-3**

Schematic Diagram PN 408133-001A/002A **19-4**

Parts List PN 408133-001A/002A **19-5**

Exploded View PN 411168-001C **19-6**

Schematic Diagram PN 411168-001C **19-7**

Parts List PN 411168-001C **19-8**

Exploded View PN 417122-001B **19-9**

Schematic Diagram PN 417122-001B **19-10**

Parts List PN 417122-001B **19-11**

General

Safety

Observe the following warning:

WARNING
The data acquisition module contains the isolation barrier between the patient and the rest of the module. If the data acquisition module is removed, repaired, or replaced for any reason, the module must undergo the current leakage and hi-pot tests listed in Chapter 5: "Preventive Maintenance" before being used on a patient. These tests verify the integrity of the isolation barrier, and are necessary to ensure continued safe operation. Failure to perform the tests may cause undue equipment failure and possible health hazards.

Assembly Configurations

There are four configurations of the data acquisition module described in this chapter. The difference between the assemblies is in the number of ECG leadwires monitored and the acquisition processor PCB used in the DAS module itself. Use the table below to determine which parts lists to use in this manual for your Tram module.

Table 19-1. DAS Module Configurations

Module Type	Leadwire Configuration	DAS Module	Acquisition Processor PCB
Tram 500A	5-Leadwire	408133-001	800330-002
Tram 600A	5-Leadwire	408133-002	800330-004
Tram 600SL	10-Leadwire	411168-001	800330-004
Tram 600SL	10-Leadwire	417122-001 (Replaced 411168-001)	801040-001
Tram 650SL	10-Leadwire	411168-001	800330-004
Tram 650SL	10-Leadwire	417122-001 (Replaced 411168-001)	801040-001

Exploded View PN 408133-001A/002A

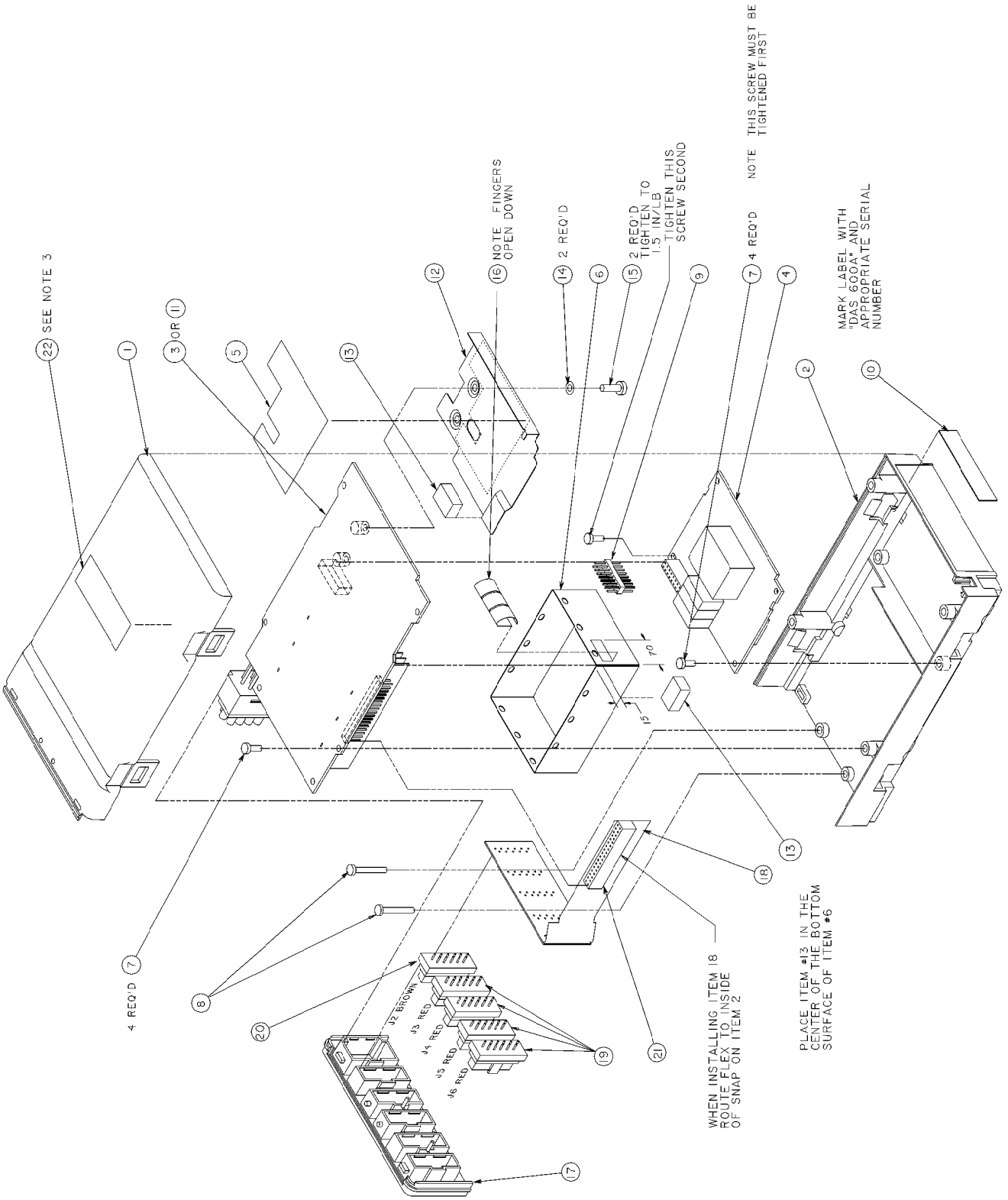

Schematic Diagram PN 408133-001A/002A

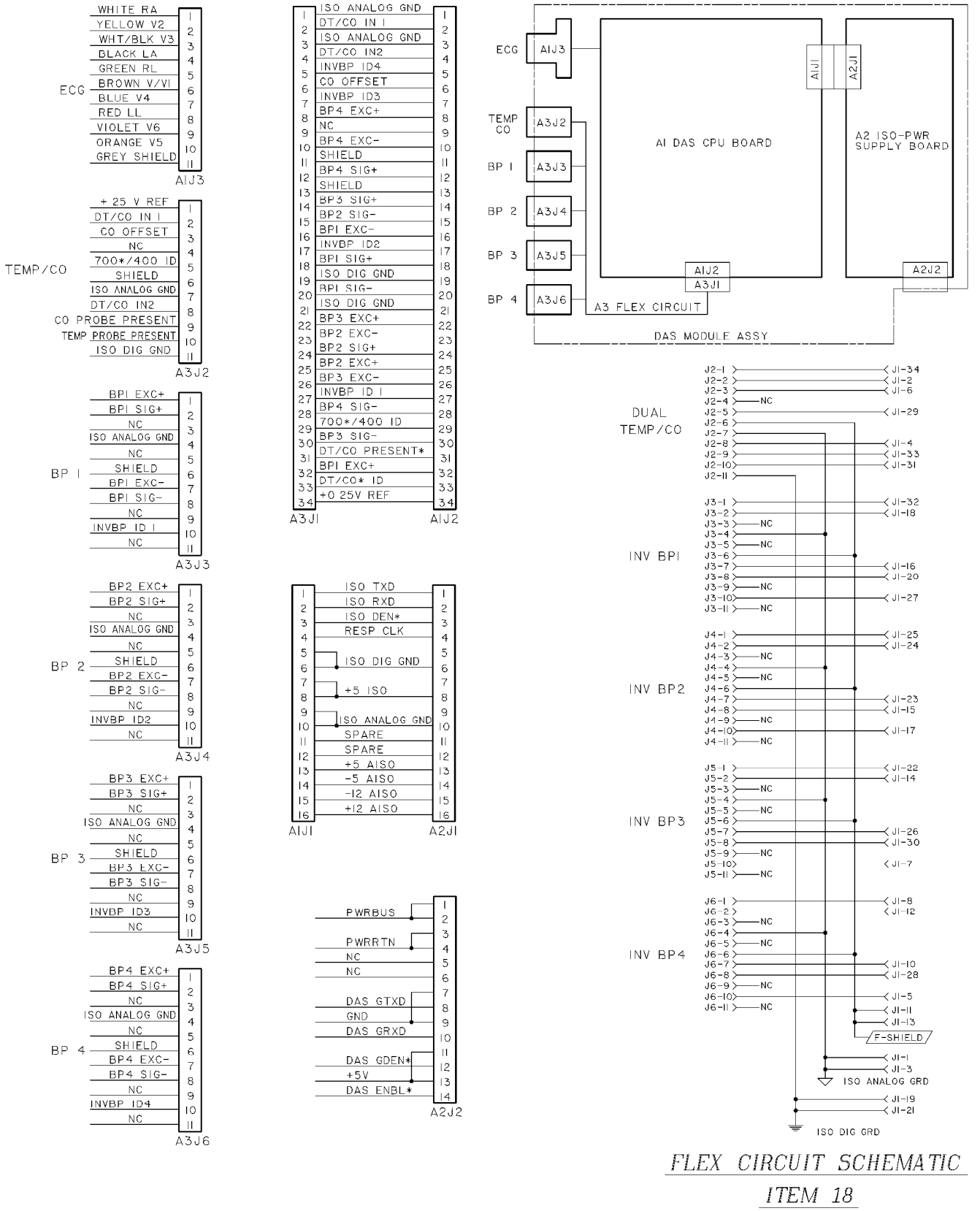

Parts List PN 408133-001A/002A

Item	Reference Designation	Parts List	Part Number	Qty
1		Cover, Top	401311-001	1
2		Cover, Lower	401681-001	1
3	A1	Acquisition Processor PCB, 5-Lead, 4-BP (For PN 408133-001 Only)	800330-002	1
4	A2	Isolated Power Supply PCB	402329-002	1
5		Insulator	408417-001	1
6		Shield, Hybrids	403283-002	1
7		Screw, BDGH, Phillips, 4-40 x 3/16	45074-406	8
8		Screw, 4-40 x 7/8	404069-001	2
9	A1J1, A2J1	Header, Vertical, 16-Pin	1778-916	1
10		Label, Model/Serial Number	404525-006	1
11	A1	Acquisition Processor PCB, 5-Lead, 4-BP (For PN 408133-002 Only)	800330-004	1
12		Shield, Acquisition Processor PCB, Lower	405517-001	1
13		Tape, Foam	4819-102	AR
14		Washer, Nylon, Flat, No 6	4550-130	2
15		Screw, BDGH, Phillips, 6-32 x 3/16	45074-606	2
16		Spring, Chassis Ground, Rear	403741-001	AR
17		Isolated Connector Panel, Tram 400/500/600 Module	402159-001	1
18	A3	Flex Circuit, BP/Temp	404109-001	1
19	A3J2	Connector, BP (Red)	401762-004	4
20	A3J3 – A3J6	Connector, TEMP/CO (Brown)	401762-021	1
21	A3J1	Connector, 34-Pin, Horizontal	17020-034	1
22		Label (Marked with “WARNING, TRAM TYPE MUST BE SET WHEN DAS MODULE IS EXCHANGED”)	404525-001	1

Exploded View PN 411168-001C

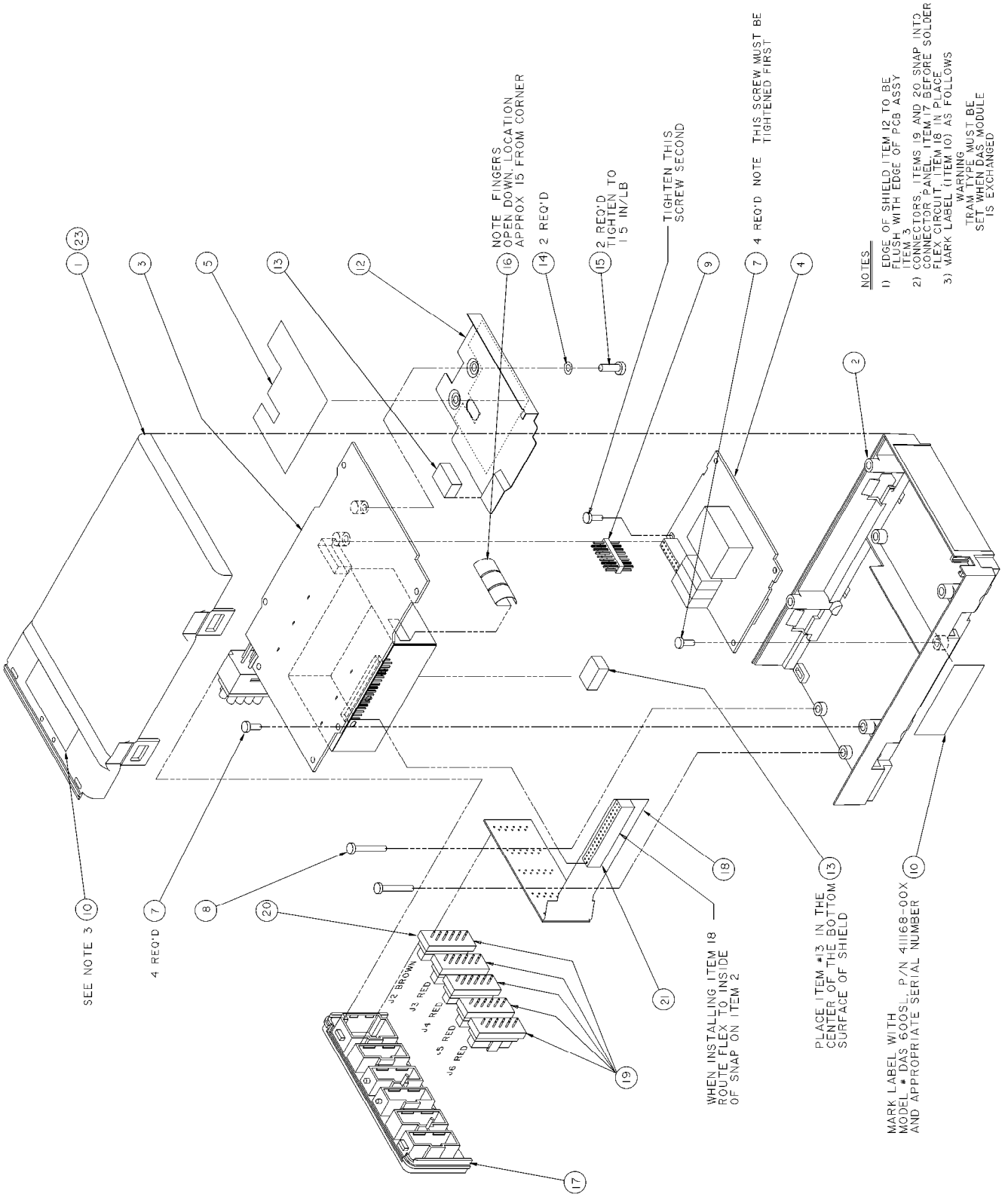

Schematic Diagram PN 411168-001C

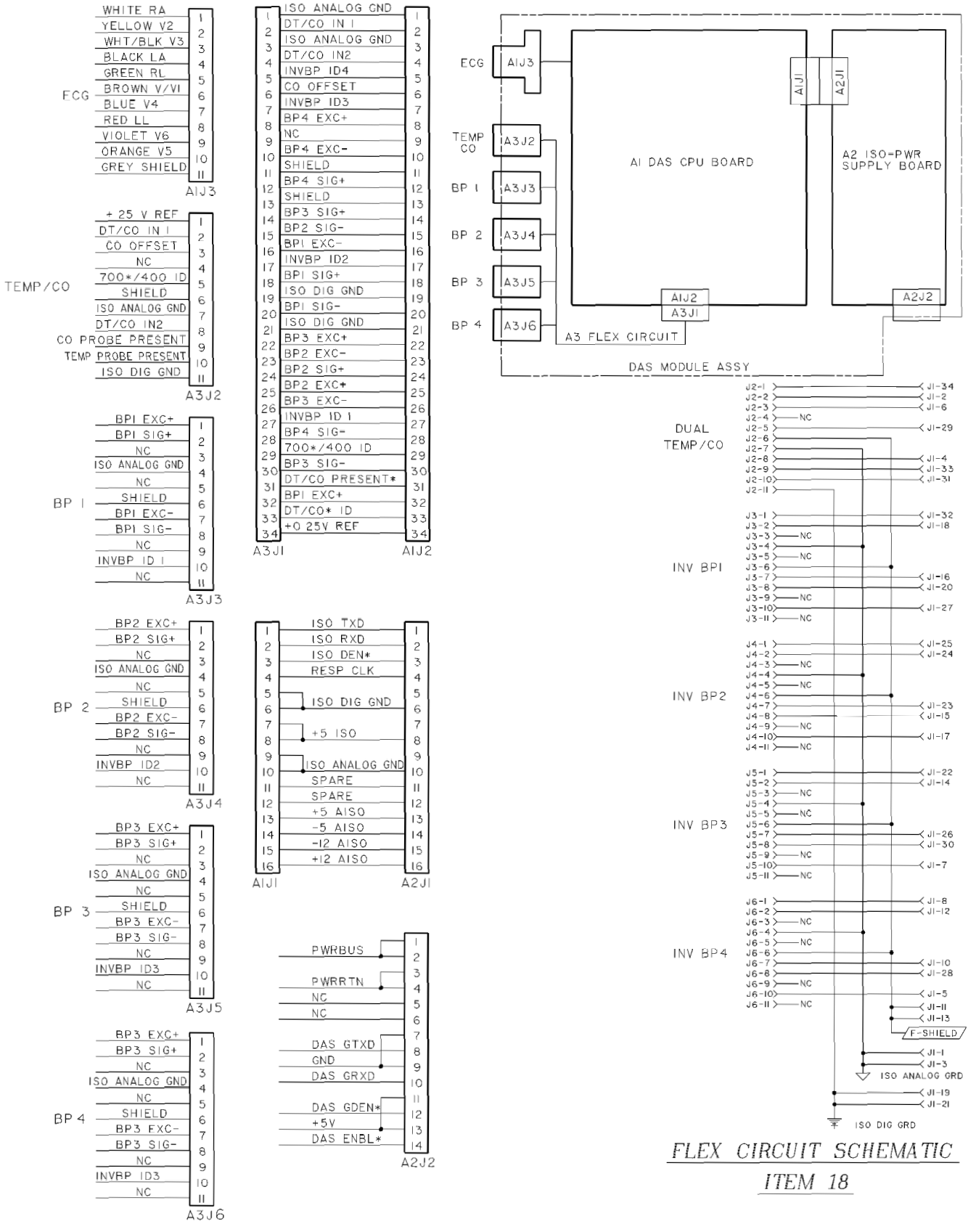

Parts List PN 411168-001C

Item	Reference Designation	Parts List	Part Number	Qty
1		Cover, Top	401311-001	0
2		Cover, Lower	401681-001	0
3	A1	Acquisition Processor PCB, 10-Lead, 4-BP	800330-004	1
4	A2	Isolated Power Supply PCB	402329-002	1
5		Insulator	408417-001	1
6		Shield, Hybrids	403283-002	1
7		Screw, BDGH, Phillips, 4-40 x 3/16	45074-406	8
8		Screw, 4-40 x 7/8	404069-001	2
9		Header, Vertical, 16-Pin	1778-916	1
10		Label (Marked with “WARNING, TRAM TYPE MUST BE SET WHEN DAS MODULE IS EXCHANGED”)	404525-001	2
12		Shield, Acquisition Processor PCB, Lower	405517-001	1
13		Tape, Foam	4819-102	2
14		Washer, Nylon, Flat, No 6	4550-130	2
15		Screw, BDGH, Phillips, 6-32 x 3/16	45074-606	2
16		Spring, Chassis Ground, Rear	403741-001	AR
17		Isolated Connector Panel, Tram 400/500/600 Module	402159-001	1
18	A3	Flex Circuit, BP/Temp	404109-001	1
19		Connector, BP (Red)	401762-004	4
20		Connector, TEMP/CO (Brown)	401762-021	1
21		Connector, 34-Pin, Horizontal	17020-034	1

Exploded View PN 417122-001B

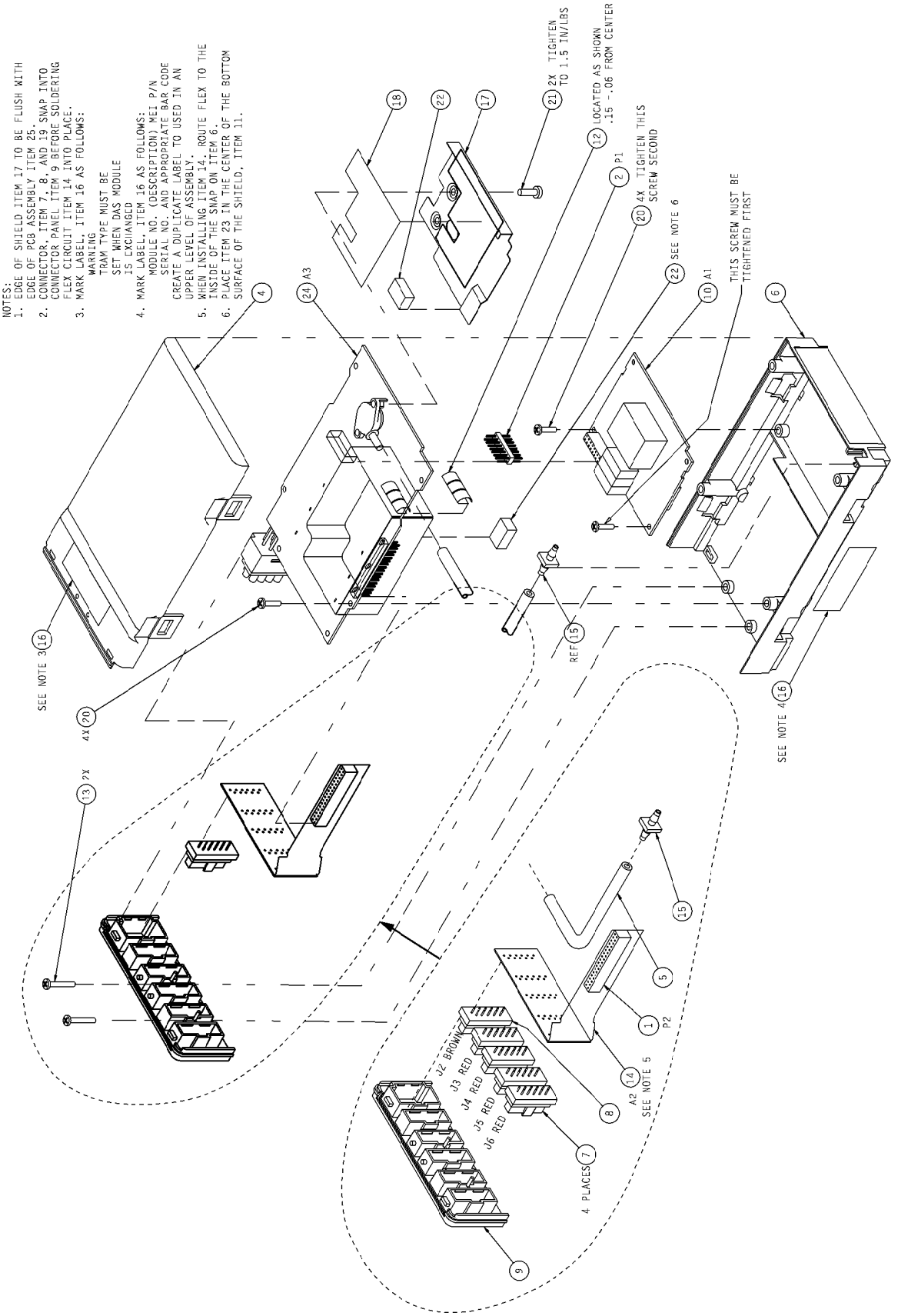

Schematic Diagram PN 417122-001B

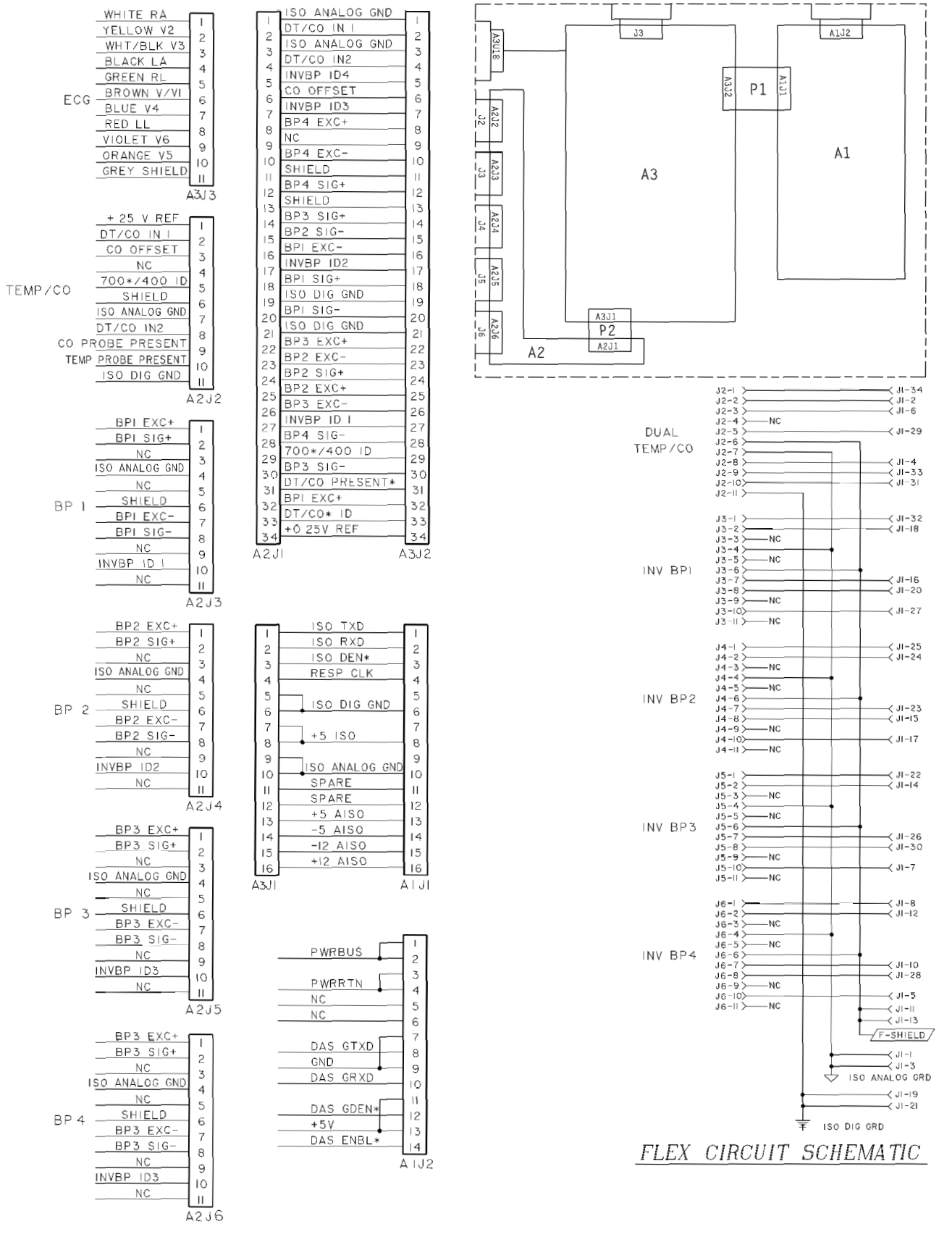

Parts List PN 417122-001B

Item	Reference Designation	Parts List	Part Number	Qty
1	P2	Connector, 34-Pin, Horizontal	17020-034	1
2	P1	Header, Vertical, 16-Pin	1778-916	1
4		Cover, Top	401311-001	1
6		Cover, Lower	401681-001	1
7		Connector, BP (Red)	401762-004	4
8		Connector, TEMP/CO (Brown)	401762-021	1
9		Isolated Connector Panel, Tram 400/500/600 Module	402159-001	1
10	A1	Isolated Power Supply PCB	402329-002	1
12		Spring, Chassis Ground, Rear	403741-001	AR
13		Screw, 4-40 x 7/8	404069-001	2
14	A2	Flex Circuit, BP/Temp	404109-001	1
16		Label (Marked with “WARNING, TRAM TYPE MUST BE SET WHEN DAS MODULE IS EXCHANGED”)	404525-001	2
17		Shield, Acquisition Processor PCB, Lower	405517-001	1
18		Insulator	408417-001	1
20		Screw, BDGH, Phillips, 4-40 x 3/16	45074-406	8
21		Screw, BDGII, Phillips, 6-32 x 1/2	45074-917	2
22		Tape, Foam	4819-102	2
24	A3	Acquisition Processor PCB, 10-Lead, 2-BP, W/NBP	801040-001	1

For your notes

20 800 ACQUISITION MODULE PN 411068/411025/417123/417124

General **20-2**
Safety 20-2
Assembly Configurations 20-2

Exploded View PN 411068-001C **20-3**

Schematic Diagram PN 411068-001C **20-4**

Parts List PN 411068-001C **20-5**

Exploded View PN 411025-001C **20-6**

Schematic Diagram PN 411025-001C **20-7**

Parts List PN 411025-001C **20-8**

Exploded View PN 417123-001B/417124-001B **20-9**

Schematic Diagram PN 417123-001B/417124-001B **20-10**

Parts List PN 417123-001B/417124-001B **20-11**

General

Safety

Observe the following warning:

WARNING
The data acquisition module contains the isolation barrier between the patient and the rest of the module. If the data acquisition module is removed, repaired, or replaced for any reason, the module must undergo the current leakage and hi-pot tests listed in Chapter 5: "Preventive Maintenance" before being used on a patient. These tests verify the integrity of the isolation barrier, and are necessary to ensure continued safe operation. Failure to perform the tests may cause undue equipment failure and possible health hazards.

Assembly Configurations

There are four configurations of the data acquisition module described in this chapter. The difference between the assemblies is in the number of ECG leadwires monitored and the acquisition processor PCB used in the DAS module itself. Use the table below to determine which parts lists to use in this manual for your Tram module.

Table 20-1. DAS Module Configurations

Module Type	Leadwire Configuration	DAS Module	Acquisition Processor PCB
Tram 800A	5-Leadwire	411068-001	800330-011
Tram 800A	5-Leadwire	417124-001 (Replaced 411068-001)	801040-002
Tram 800SL	10-Leadwire	411025-001	800330-012
Tram 800SL	10-Leadwire	417123-001 (Replaced 411025-001)	801040-001
Tram 850A	5-Leadwire	411068-001	800330-011
Tram 850A	5-Leadwire	417124-001 (Replaces 411068-001)	801040-001
Tram 850SL	10-Leadwire	411025-001	800330-012
Tram 850SL	10-Leadwire	417123-001 (Replaces 411025-001)	801040-001

Exploded View PN 411068-001C

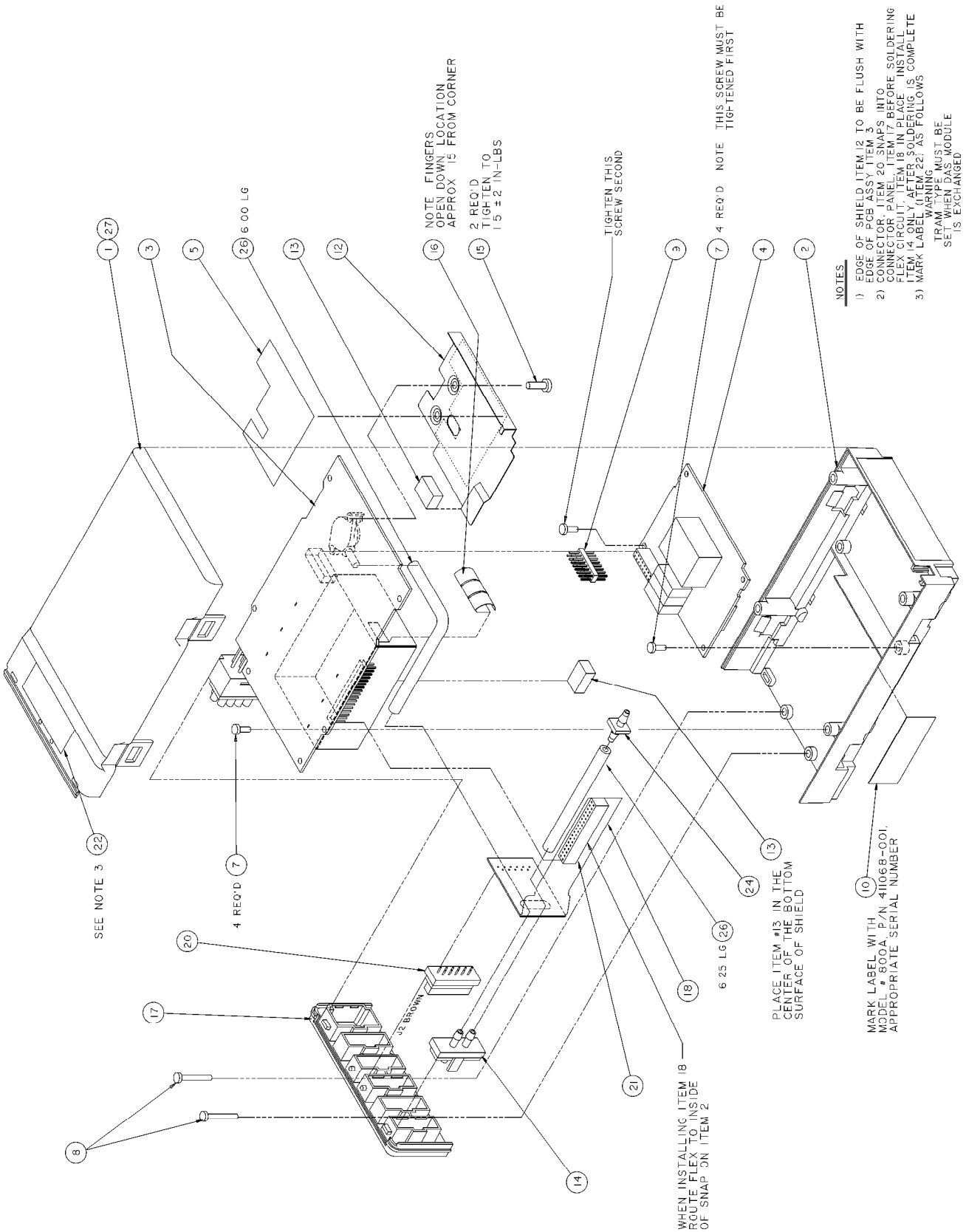

Schematic Diagram PN 411068-001C

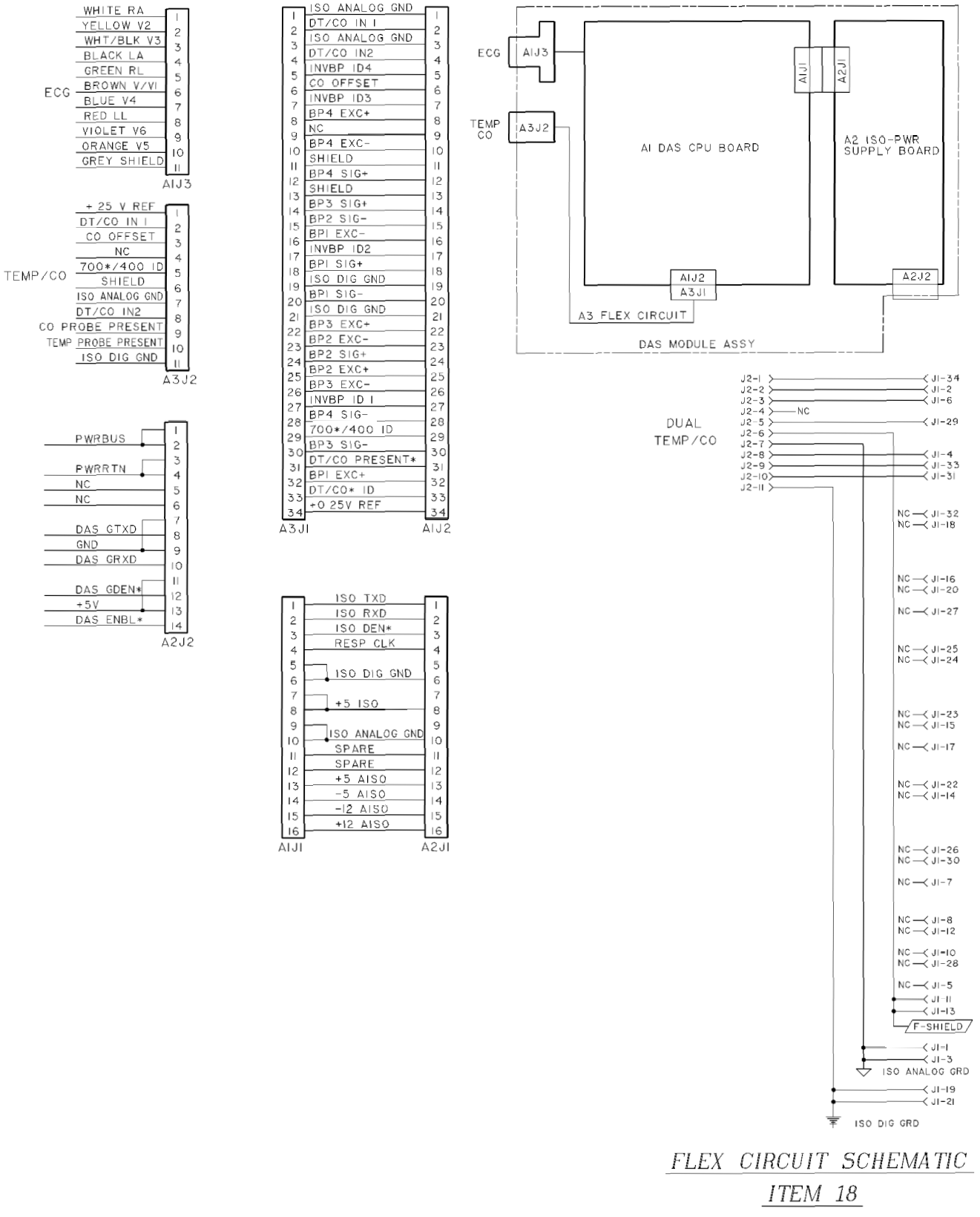

Parts List PN 411068-001C

Item	Reference Designation	Parts List	Part Number	Qty
1		Cover, Top	401311-001	0
2		Cover, Lower	401681-001	0
3	A1	Acquisition Processor PCB, 5-Lead	800330-011	1
4	A2	Isolated Power Supply PCB	402329-002	1
5		Insulator	408417-001	1
7		Screw, BDGH, Phillips, 4-40 x 3/16	45074-406	8
8		Screw, 4-40 x 7/8	404069-001	2
9		Header, Vertical, 16-Pin	1778-916	1
10		Label (Marked with “WARNING, TRAM TYPE MUST BE SET WHEN DAS MODULE IS EXCHANGED”)	404525-001	2
12		Shield, Acquisition Processor PCB, Lower	405517-001	1
13		Tape, Foam	4819-102	2
14		Connector, Pneumatic, NBP, Recessed	414640-002	1
15		Screw, BDGH, Phillips, 6-32 x 1/2	45074-917	2
16		Spring, Chassis Ground, Rear	403741-001	AR
17		Isolated Connector Panel, Tram 800	402159-004	1
18	A3	Flex Circuit, Temp	800397-003	1
20		Connector, TEMP/CO (Brown)	401762-021	1
21		Connector, 34-Pin, Horizontal	17020-034	1
22		Label	404525-001	1
24		Connector, Pneumatic	404445-001	1
26		Tubing, Silastic	401582-001	AR

Exploded View PN 411025-001C

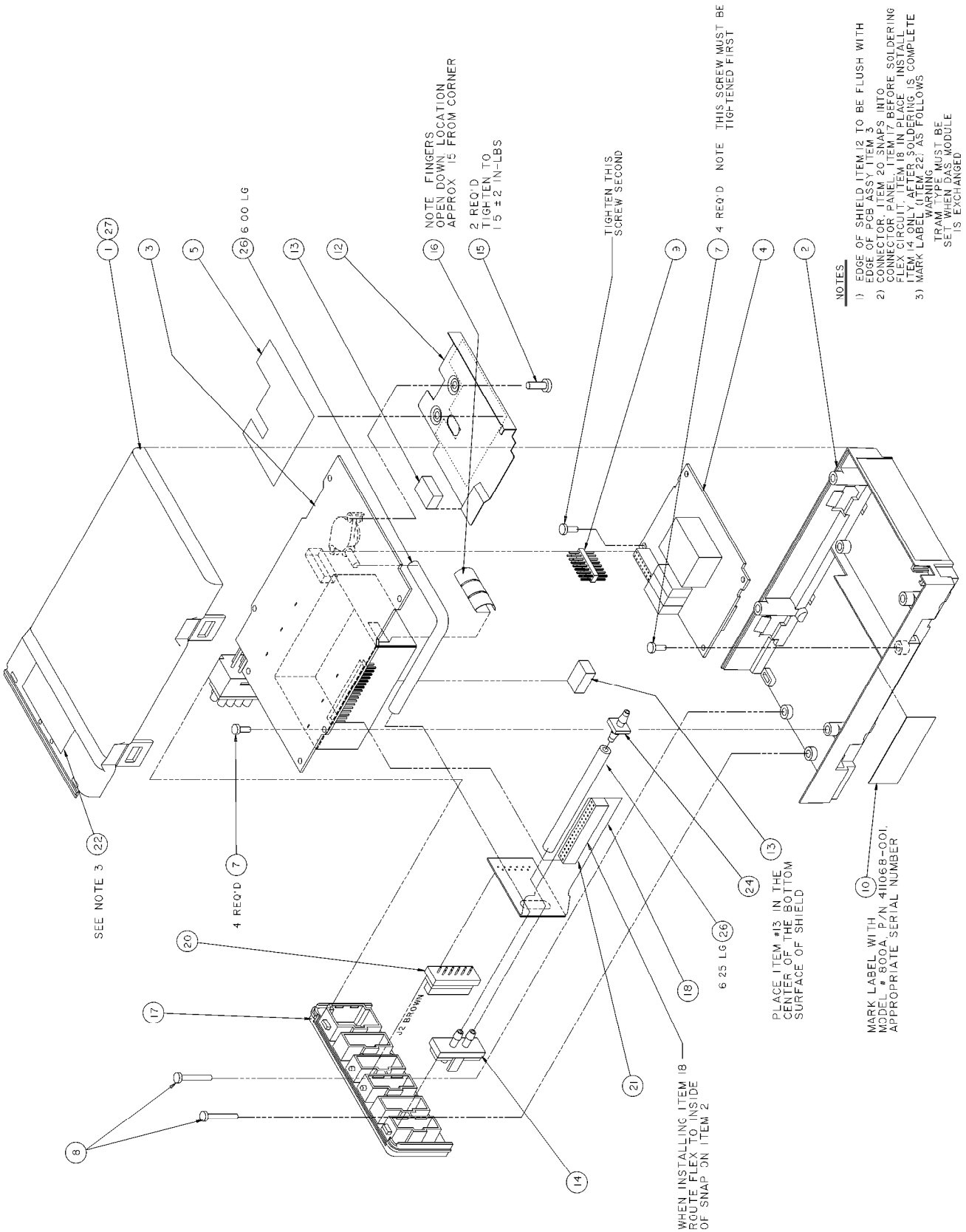

Schematic Diagram PN 411025-001C

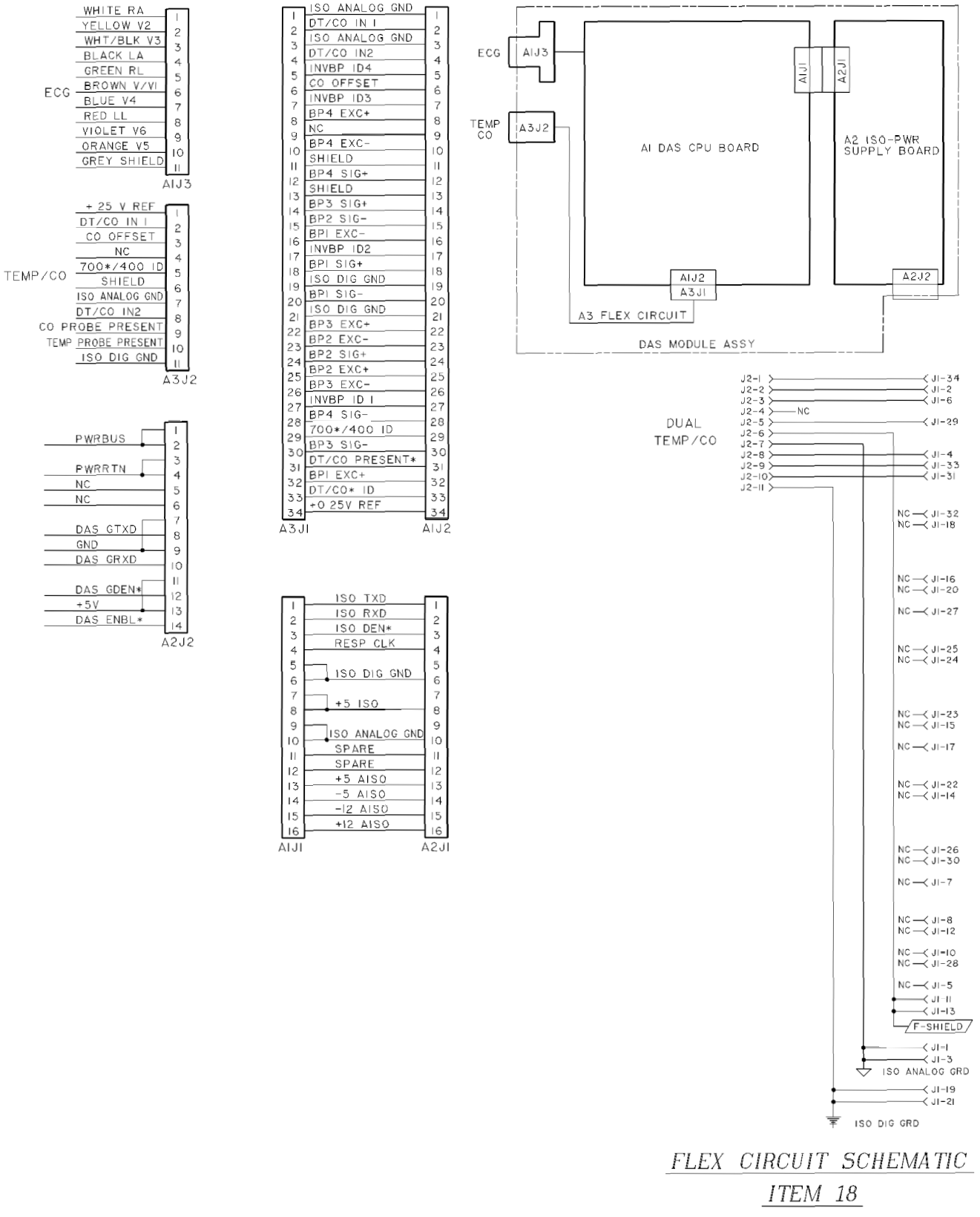

Parts List PN 411025-001C

Item	Reference Designation	Parts List	Part Number	Qty
1		Cover, Top	401311-001	0
2		Cover, Lower	401681-001	0
3	A1	Acquisition Processor PCB, 10-Lead	800330-012	1
4	A2	Isolated Power Supply PCB	402329-002	1
5		Insulator	408417-001	1
7		Screw, BDGH, Phillips, 4-40 x 3/16	45074-406	8
8		Screw, 4-40 x 7/8	404069-001	2
9		Header, Vertical, 16-Pin	1778-916	1
10		Label (Marked with “WARNING, TRAM TYPE MUST BE SET WHEN DAS MODULE IS EXCHANGED”)	404525-001	2
12		Shield, Acquisition Processor PCB, Lower	405517-001	1
13		Tape, Foam	4819-102	2
14		Connector, Pneumatic, NBP, Recessed	414640-002	1
15		Screw, BDGH, Phillips, 6-32 x 1/2	45074-917	2
16		Spring, Chassis Ground, Rear	403741-001	0.1
17		Isolated Connector Panel, Tram 800	402159-004	1
18	A3	Flex Circuit, Temp	800397-003	1
20		Connector, TEMP/CO (Brown)	401762-021	1
21		Connector, 34-Pin, Horizontal	17020-034	1
22		Label	404525-001	1
24		Connector, Pneumatic	404445-001	1
26		Tubing, Silastic	401582-001	AR

Exploded View PN 417123-001B/417124-001B

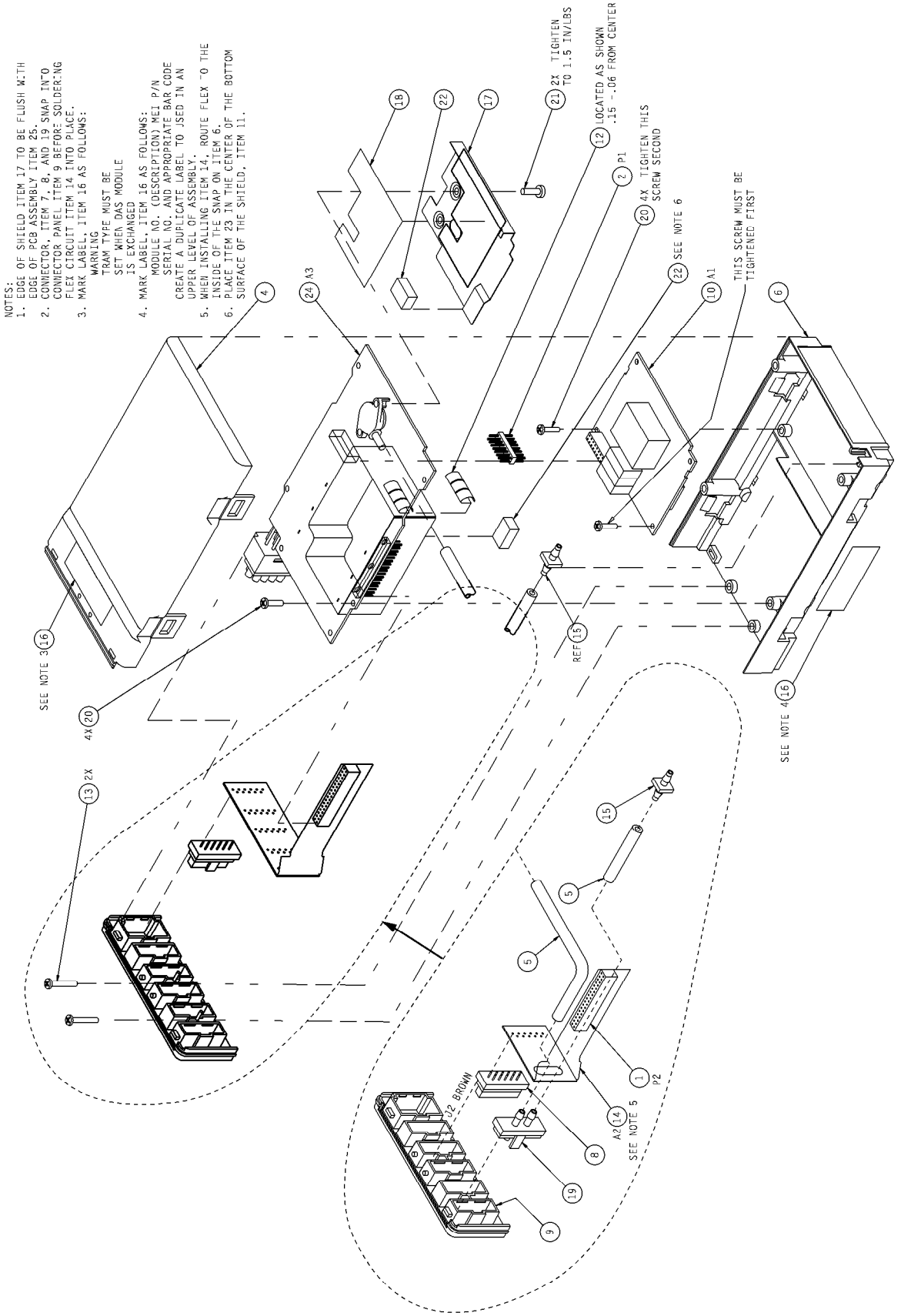

Schematic Diagram PN 417123-001B/417124-001B

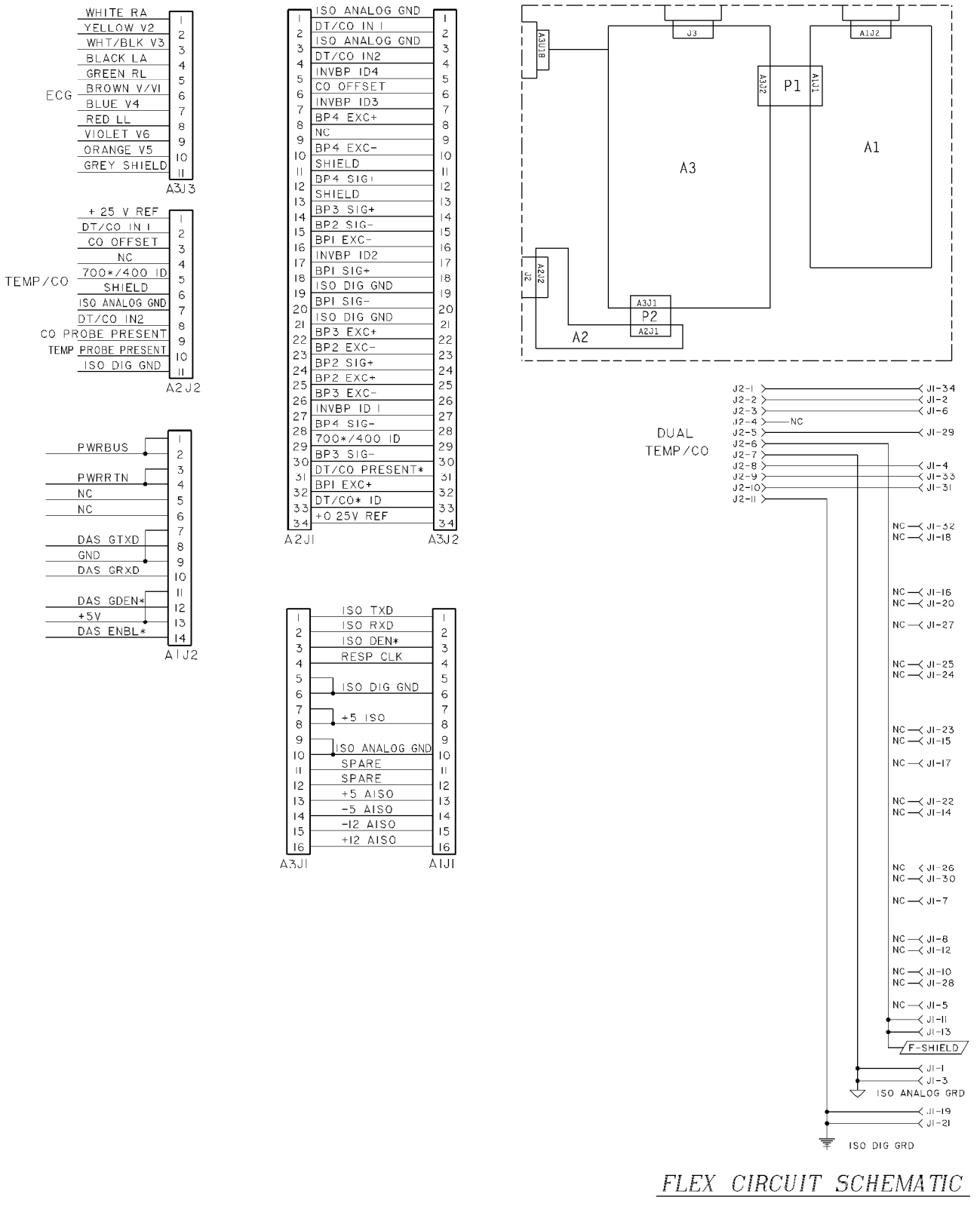

Parts List PN 417123-001B/417124-001B

Item	Reference Designation	Parts List	Part Number	Qty
1	P2	Connector, 34-Pin, Horizontal	17020-034	1
2	P1	Header, Vertical, 16-Pin	1778-916	1
4		Cover, Top	401311-001	1
5		Tubing, Silastic	401582-001	AR
6		Cover, Lower	401681-001	1
7		Connector, BP (Red)	401762-004	2
8		Connector, TEMP/CO (Brown)	401762-021	1
9		Isolated Connector Panel, Tram 800	402159-004	1
10	A1	Isolated Power Supply PCB	402329-002	1
12		Spring, Chassis Ground, Rear	403741-001	AR
13		Screw, 4-40 x 7/8	404069-001	2
14	A2	Flex Circuit, BP/Temp	800397-003	1
15		Connector, Pneumatic	404445-001	1
16		Label (Marked with “WARNING, TRAM TYPE MUST BE SET WHEN DAS MODULE IS EXCHANGED”)	404525-001	2
17		Shield, Acquisition Processor PCB, Lower	405517-001	1
18		Insulator	408417-001	1
19		Socket, NBP w/o Key	414640-002	1
20		Screw, BDGH, Phillips, 4-40 x 3/16	45074-406	8
21		Screw, BDGH, Phillips, 6-32 x 1/2	45074-917	2
22		Tape, Foam	4819-102	2
24	A3	Acquisition Processor PCB, 5-Lead, 2-BP, W/NBP (For 417124-001 Only)	801040-001	1
24	A3	Acquisition Processor PCB, 10-Lead, 2-BP, W/NBP (For 417123-001 Only)	801040-002	1

For your notes

21 NBP VALVE ASSEMBLY PN 416153

General **21-2**

Exploded View PN 416153-001A **21-3**

Exploded View PN 413021-001B/404459-001C **21-4**

Parts List PN 413021-001B/404459-001C **21-5**

General

This chapter describes the NBP valve assembly used in the Tram 100A, 200A/SL, 250SL,400A/SL, 450SL, 800A/SL, and 850A/SL modules. A parts list and an exploded view are presented in this chapter.

The NBP valve assembly contains the pressure release valves that regulate the air pressure in the noninvasive blood pressure cuff. Because it is manufactured by a vendor, no parts lists is provided.

Older assemblies pn 413021-001 and pn 404459-001 are included in this chapter for reference only, but they should be replaced with the pn 416153-001 version if the assembly proves defective.

Exploded View PN 416153-001A

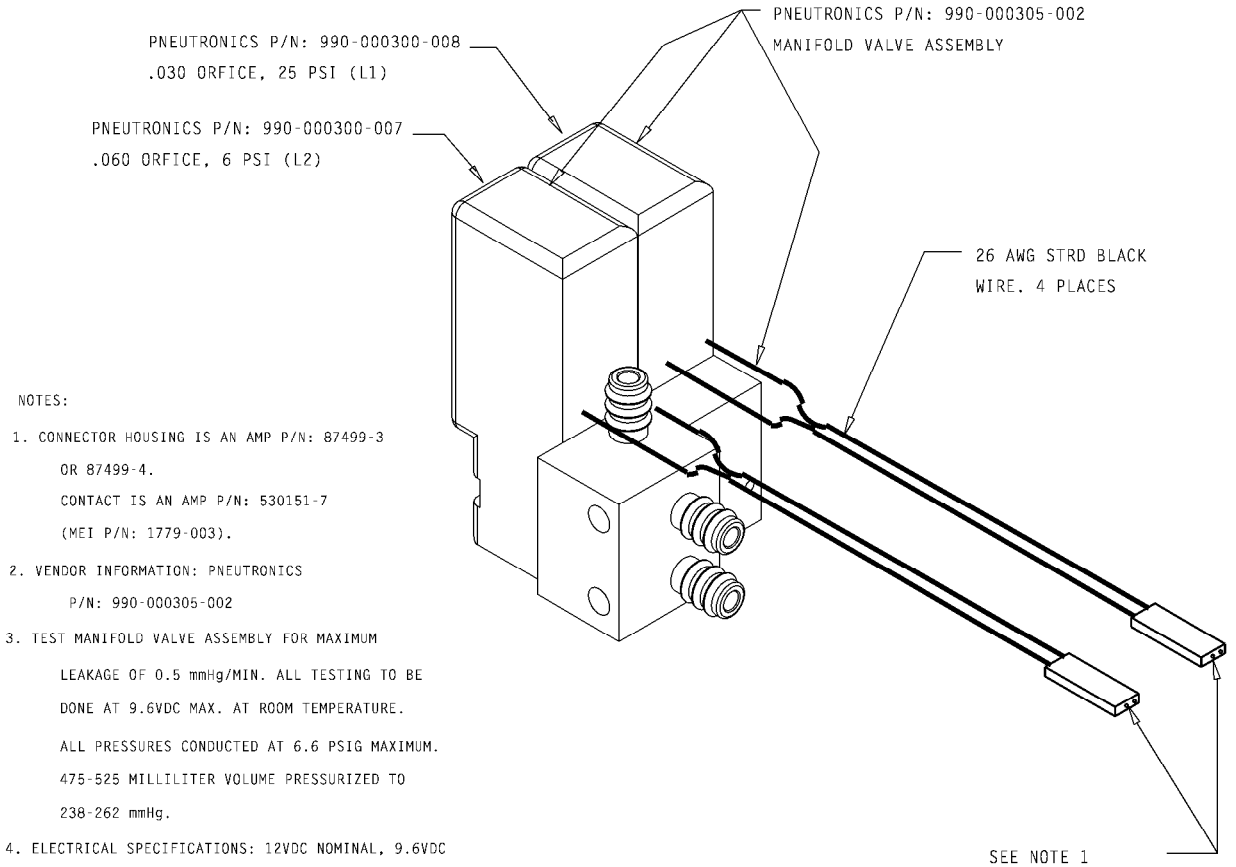

NOTES:

1. CONNECTOR HOUSING IS AN AMP P/N: 87499-3 OR 87499-4. CONTACT IS AN AMP P/N: 530151-7 (MEI P/N: 1779-003).
2. VENDOR INFORMATION: PNEUTRONICS P/N: 990-000305-002
3. TEST MANIFOLD VALVE ASSEMBLY FOR MAXIMUM LEAKAGE OF 0.5 mmHg/MIN. ALL TESTING TO BE DONE AT 9.6VDC MAX. AT ROOM TEMPERATURE. ALL PRESSURES CONDUCTED AT 6.6 PSIG MAXIMUM. 475-525 MILLILITER VOLUME PRESSURIZED TO 238-262 mmHg.
4. ELECTRICAL SPECIFICATIONS: 12VDC NOMINAL, 9.6VDC MINIMUM, 0.50-0.56W, 257-288 OHM.
5. TEST FLOW RATE ON VALVE AUTOMATIC TESTER (MEI MT4500) VALVE PRESSURE DROP (mmHg):
   L1 = 75-104
   L2 – 40-77
   475-525 MILLILITER VOLUME PRESSURIZED TO 200 -2 mmHg.
6. PACKAGING SHALL BE CLEAN AND FREE OF LOOSE PARTICLES. PACKAGE ASSEMBLIES IN CLOSED ANTISTATIC BAGS TO PREVENT CONTAMINATION.
7. OPERATING TEMPERATURE RANGE: 01 TO 70iC.
8. ANY CHANGES TO THIS ASSEMBLY AND/OR VALVES MUST HAVE WRITTEN APPROVAL FROM MEI ENGINEERING.
9. LABEL THE MANIFOLD VALVE ASSEMBLY WITH: P/N 990-000305-002 AND DATE CODE. LABEL EACH VALVE WITH PNEUTRONICS PART NUMBER AND 9.6VDC.

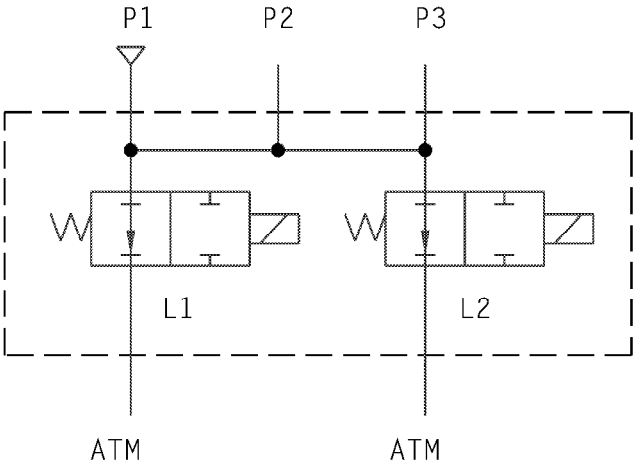

PNEUMATIC SCHEMATIC

ATM ATM

PNEUMATIC SCHEMATIC

Exploded View PN 413021-001B/404459-001C

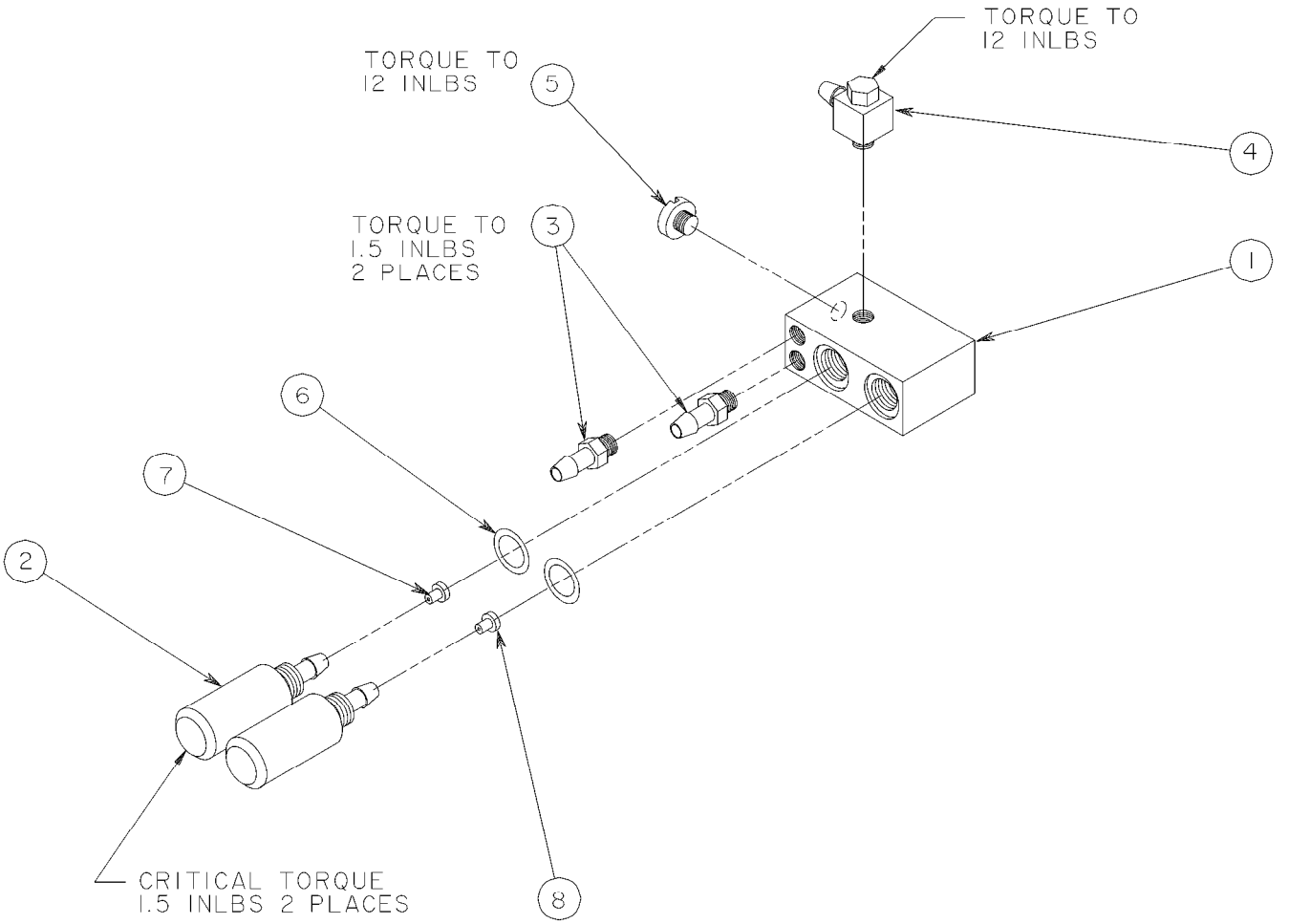

Parts List PN 413021-001B/404459-001C

Item	Reference Designation	Parts List	Part Number	Qty
1		Manifold, NBP	404523-001	1
2	V0, V1, W4, W5	Valve, Solenoid -- w/Harness (For PN 413021-001 Only)	413024-001	2
2	V0, V1, W4, W5	Valve, Solenoid -- w/Harness (For PN 404459-001 Only)	700040-001	2
3		Fitting, Adapter, 10-32 to 1/8-Inch ID	4745-201	2
4		Fitting, Adapter, 90˚, 10-32 to 1/8-Inch ID	404635-001	1
5		Plug, Brass, 10-32	404674-001	1
6		O-Ring, 0.301-Inch ID	404740-002	2
7		Restrictor, 0.06/0.063 (Black)	404637-002	1
8		Restrictor, 0.03/0.033 (White)	404637-001	1
9		Sealant, Loctite 92	4851-048	AR

For your notes

22 POWER SUPPLY ASSEMBLY PN 401309

Location Diagram PN 401309-002J **22-2**

Parts List PN 401309-002J **22-3**

Schematic Diagram PN 401309-001F **22-5**

Parts Location Diagram PN 401309-002J

Component Side

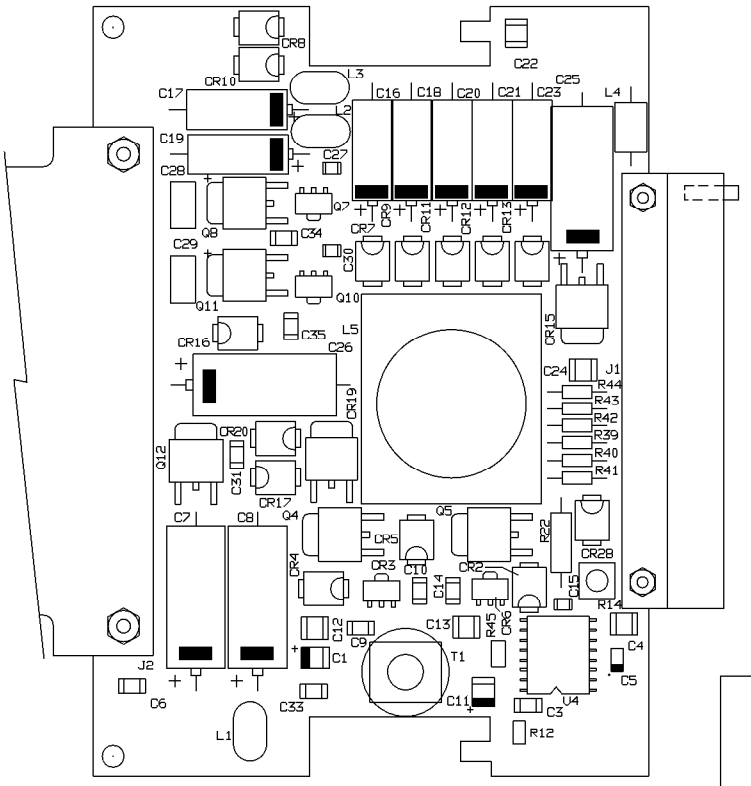

Solder Side

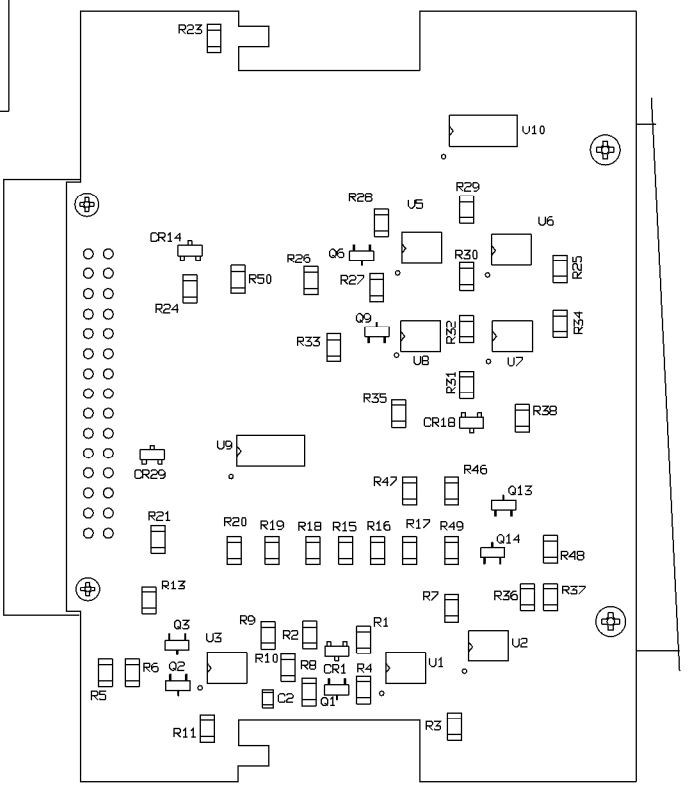

Parts List PN 401309-002J

Item	Parts List	Part Number	Qty
C1, 11	Cap, Tant, 4.7µF, 20%, 10V, SM	1176-475	2
C2	Cap, Cer, 47pF, 5%, 50V, SM	1181-470	1
C3, 6, 9, 10, 14, 31, 33, 34, 35	Cap, Cer, 0.1µF, 20%, 50V	404370-001	9
C4	Cap, Cer, 1000pF, 2%, SM	1184-102	1
C5	Cap, Tant, 1µF, 10%, 16V, SM	403253-001	1
C7, 8	Cap, Tant, 47µF, 10%, 20V	1127-476	2
C12, 13	Cap, Cer, 0.0022µF, 5%, 100V, SM	403030-001	2
C15	Cap, Cer, 0.001µF, 5%, 50V, SM	1181-102	1
C16 - 19, 23	Cap, Tant, 27µF, 10%, 20V	1135-276	5
C20, 21	Cap, Tant, 82µF, 10%, 10V	1225-826	2
C22, 24	Cap, Cer, 0.01µF, 10%, 100V, SM	403029-001	2
C25, 26	Cap, Tant, 120µF, 10%, 35V	1124-127	2
C27, 30	Cap, Cer, 470pF, 5%, 50V, SM	1181-471	2
C28, 29	Cap, Tant, 10µF, 20%, 10V, SM	1176-106	2
CR1, 18	Diode Pair, Series, SM D7000	2013-201	2
CR14	Diode, Zener, 16.8V, SM	403937-001	1
CR15, 19	Diode, Schottky, SM MBRD340	403929-001	2
CR16, 28	Transient Voltage Suppressor P6SMB6.8AT1	403189-001	2
CR2, 4, 5, 11, 12	Diode, Schottky, Barrier, 1A, 40V, SM MBRS140T3	403187-001	5
CR29	Diode, Schottky, SM BAT54	401985-001	1
CR3, 6	Diode, Zener, SM BZV49C18	403007-001	2
CR7, 9, 13	Diode, Rectifier, 1A, 100V, SM MURS110T3	403190-001	3
CR8, 10	Transorb, 15V, 5%, 600W SM6T15A	403188-001	2
J1	Connector, PC Header, 30-Pin	1865-030	1
J2	Flex Circuit Assembly, Power Supply	404150-001	1
L1, 2, 3	Inductor, Bead	1426-001	3
L4	Ferrite Bead	403921-001	1
L5	Inductor, Coupled	404256-001	1
Q1, 3, 13, 14	Transistor, NPN, SM T3904	2511-001	4
Q2, 6, 9	Transistor, PNP, SM T3906	2511-101	3
Q4, 5	Transistor, MOSFET, N-Channel, SM IRFR024	403047-001	2
Q7	Transistor, NPN, SM BCX56-1	2712-056	1
Q8	Transistor, PNP, SM MJD2955	403930-001	1
Q10	Transistor, PNP, SM BCX53-10	2712-053	1
Q11	Transistor, NPN, SM MJD3055	403931-001	1
Q12	Transistor, MOSFET, P-Channel, SM IRFR9024	403274-001	1
R1	Res, Cer, 63.4K, 1%, 1/8W, SM	1082-808	1
R2, 10	Res, Cer, 634K, 1%, 1/8W, SM	1082-809	2
R3 , 11, 46 - 49	Res, Cer, 10K, 1%, 1/8W, SM	1082-104	6
R4	Res, Cer, 20K, 1%, 1/8W, SM	1082-202	1

Item	Parts List	Part Number	Qty
R5	Res, Cer, 8.06K, 10%, 1/4W, SM	1082-920	1
R6	Res, Cer, 4.32K, 1%, 1/8W, SM	1082-876	1
R7, 25, 34	Res, Cer, 3.83K, 1%, 1/8W, SM	1082-810	3
R8, 9, 29 - 32	Res, Cer, 10K, 0.1%, 1/8W, SM	1067-834	6
R12, 23, 45	Res, Cer, 10Ω, 1%, 1/8W, SM	1082-786	3
R13	Res, Cer, 9.09K, 1%, 1/8W, SM	1082-814	1
R14	Res, Var, 2K, Top Adjust	403938-001	1
R15, 19	Res, Cer, 22Ω, 5%, 1/8W, SM	1081-220	2
R16, 20	Res, Cer, 2.21K, 1%, 1/8W, SM	1082-787	2
R17, 18	Res, Cer, 3.3Ω, 10%, 1/4W, SM	403026-001	2
R21	Res, Cer, 240Ω, 5%, 1/8W, SM	1081-471	1
R22	Res, WW, 0.1Ω, 5%, 1/2W	1017-003	1
R24	Res, Cer, 43Ω, 10%, 1/4W, SM	403025-001	1
R26	Res, 340Ω, 1%, 1/8W, SM	1082-790	1
R27, 35, 38	Res, Cer, 1K, 1%, 1/8W, SM	1082-103	3
R28, 33	Res, Cer, 15Ω, 1%, 1/8W, SM	1082-811	2
R36	Res, Cer, 5.11K, 1%, 1/8W, SM	1082-784	1
R37	Res, Cer, 100K, 1%, 1/8W, SM	1082-100	1
R39 - 44	Res, Comp, 100Ω, 5%, 1/8W	1000-101	6
R50	Res, Cer, 6.65K, 1%, 1/8W, SM	1082-850	1
T1	Transformer, SM	403106-001	1
U1	Timer, SM XR-L555	403927-001	1
U2, 6, 7	Diode, Regulator, SM LT1009S8	403928-001	3
U3, 5, 8	Operational Ampl, Single Supply, SM MC34071	403926-001	3
U4	Pulse Width Modulator, SM UC3846	402990-001	1
U9, 10	Diode Array, SM MMAD130	403957-001	2
-	Adhesive, Permalok	4851-079	AR
-	Key, Polarizing (for J1)	1865-999	1
-	Heat Shrink Tubing (for L1, 2, 3)	404747-001	AR
-	Screw, PNH, Phillips, SST, 2-56 x 11/32 (for J1)	4502-211	2
-	Screw, PNH, Phillips, SST, 4-40 x 3/8 (for J2)	4502-412	2
-	Nut, Hex, 2-56 (for J1)	4521-102	2
-	Nut, Hex, 4-40 (for J2)	4521-304	2
-	Washer, Nylon, No 4 (for J2)	4550-013	2
-	Circuit Board	401309-001E	1
-	Schematic Diagram	401309-003F	REF

Schematic Diagram PN 401309-001F

1 of 5

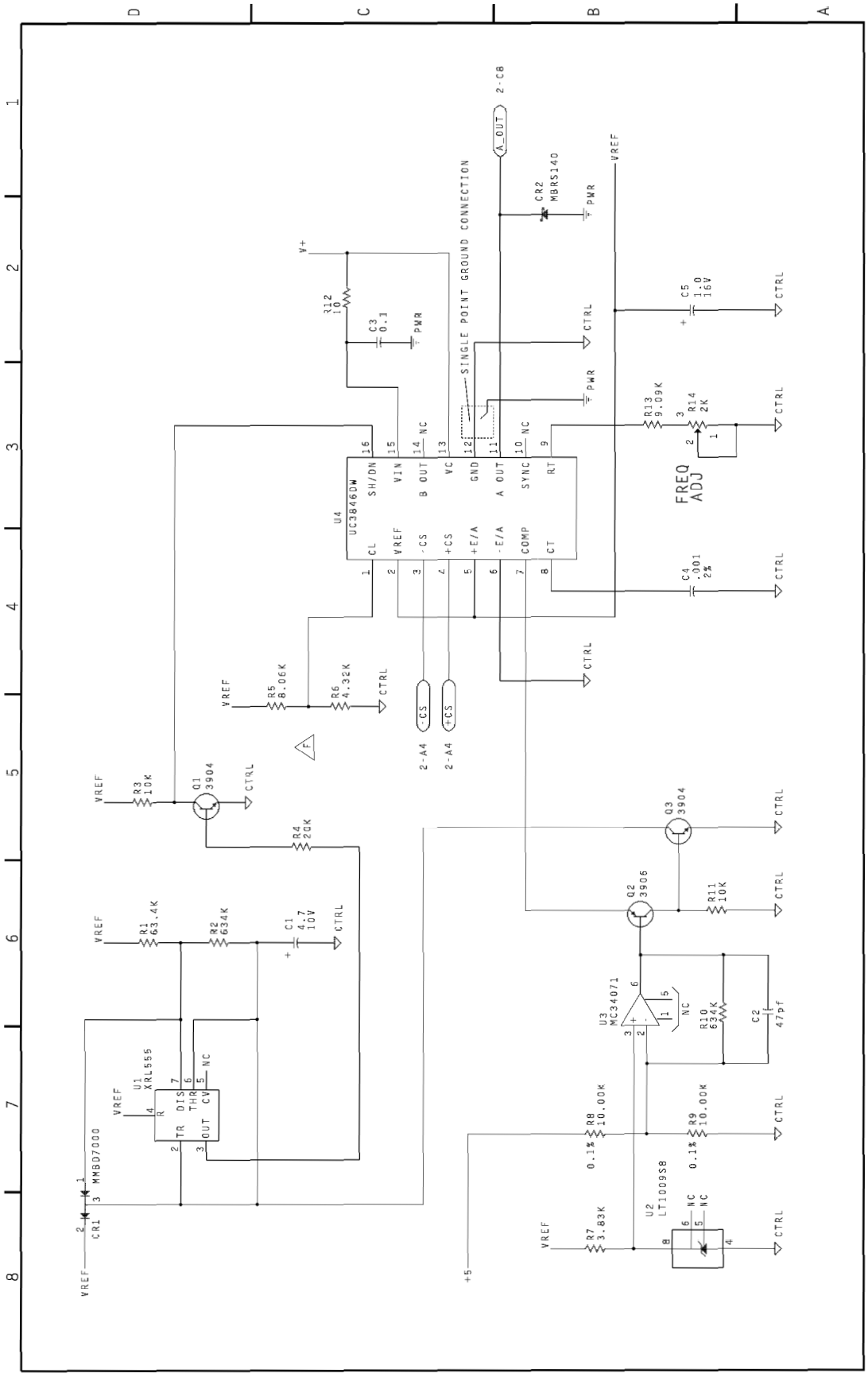

2 of 5

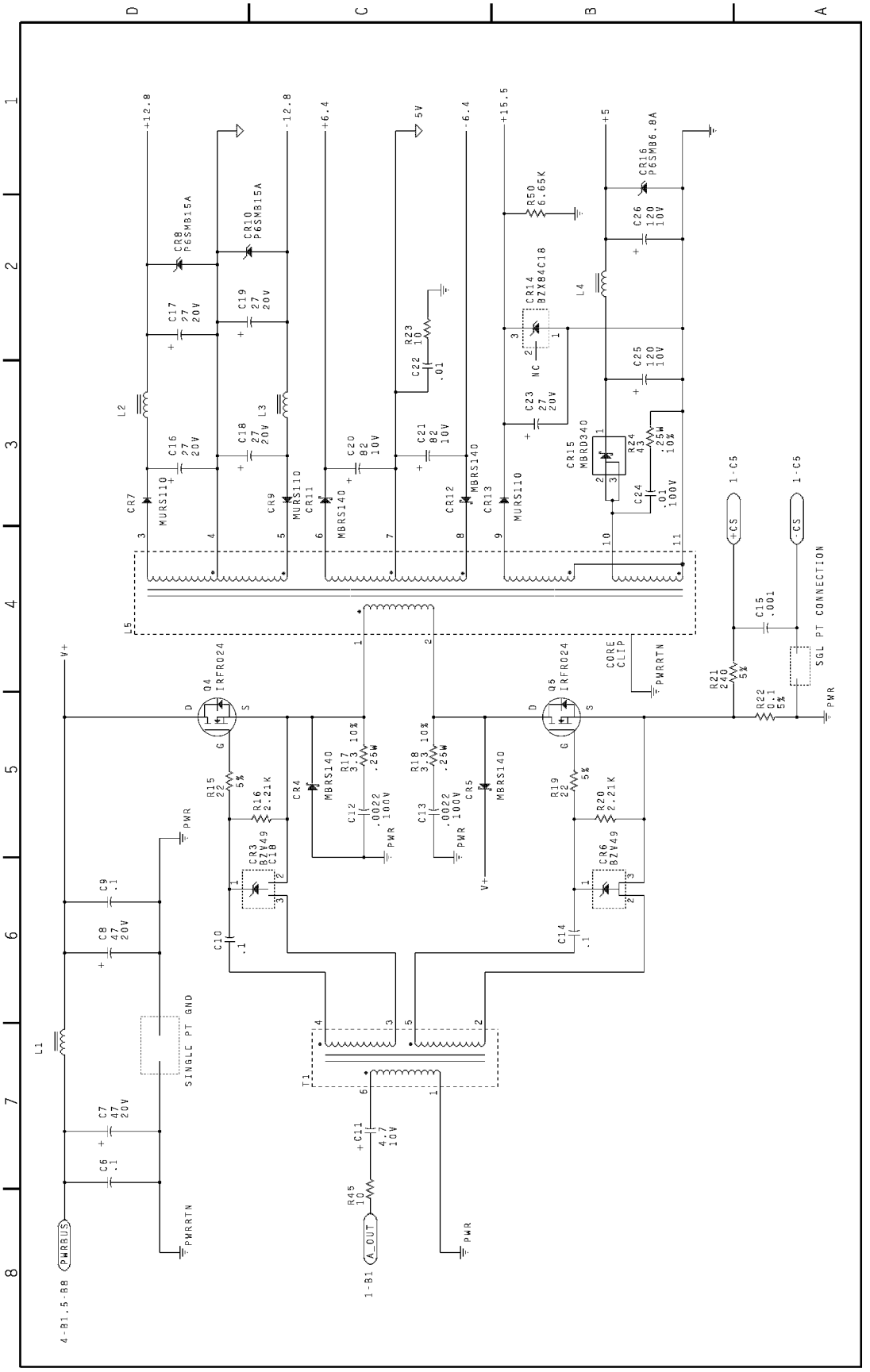
+12.8
-12.8
+6.4
5V
-6.4
+15.5
+5
CR8 P6SMB15A
CR10 P6SMB15A
CR16 P6SMB6.8A
R50 6.65K
CR14 BZX84C18
C17 27 20V
C19 27 20V
C26 120 10V
L4
R23 10
C22 .01
C25 120 10V
L2
C16 27 20V
C18 27 20V
L3
C20 82 10V
C21 82 10V
C23 27 20V
NC
CR15 MBRD340
R24 43 .25W 10%
C24 .01 100V
CR7 MURS110
CR9 MURS110
CR11 MBRS140
CR12 MBRS140
CR13 MURS110
L5
+CS
-CS
1-C5
C15 .001
SGL PT CONNECTION
V+
Q4 IRFR024
Q5 IRFR024
CORE CLIP
PWRRTN
R21 240 5%
R22 0.1 5%
PWR
R15 2.2 5%
R16 2.21K
CR4 MBRS140
R17 3.3 10% .25W
C12 .0022 100V
R18 3.3 10% .25W
C13 .0022 100V
CR5 MBRS140
R19 2.2 5%
R20 2.21K
CR3 BZV49 C18
CR6 BZV49
C10 .1
C14 .1
C9 .1
C8 47 20V
L1
SINGLE PT GND
T1
C7 47 20V
C6 .1
C11 4.7 10V
R45 10
A_OUT
1-B1
PWRBUS
4-B1,5-B8

3 of 5

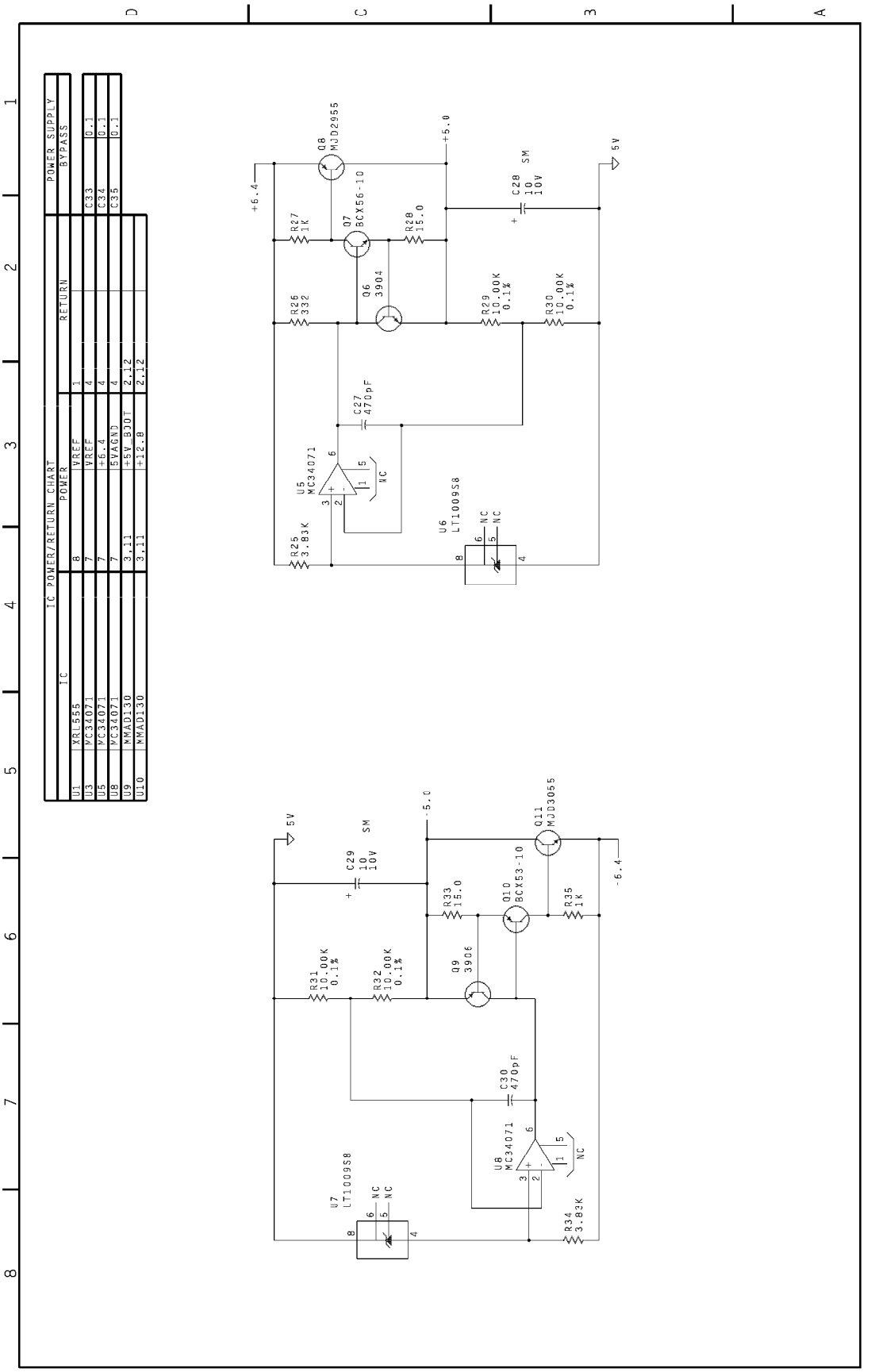
TC POWER/RETURN CHART
TC
POWER
RETURN
U1 XR-555 8 VREF 1
U3 MC34071 7 VREF 4
U5 MC34071 7 +6.4 4
U8 MC34071 7 5VAGND 4
U9 MMAD130 3.11 +5V BOOT 2.12
U10 MMAD130 3.11 +12.8 2.12
POWER SUPPLY
BYPASS
C33 0.1
C34 0.1
C35 0.1
Q8 MJD2955
Q7 BCX56-10
Q6 3904
R27 1K
R26 332
R28 15.0
R29 10.00K 0.1%
R30 10.00K 0.1%
R25 3.83K
C27 470pF
U5 MC34071
U6 LT1009S8
C28 10 10V SM
+6.4
+5.0
5V
Q11 MJD3055
Q10 BCX53-10
Q9 3906
R33 15.0
R35 1K
R31 10.00K 0.1%
R32 10.00K 0.1%
C29 10 10V SM
C30 470pF
U8 MC34071
U7 LT1009S8
R34 3.83K
-5.0
-6.4

4 of 5

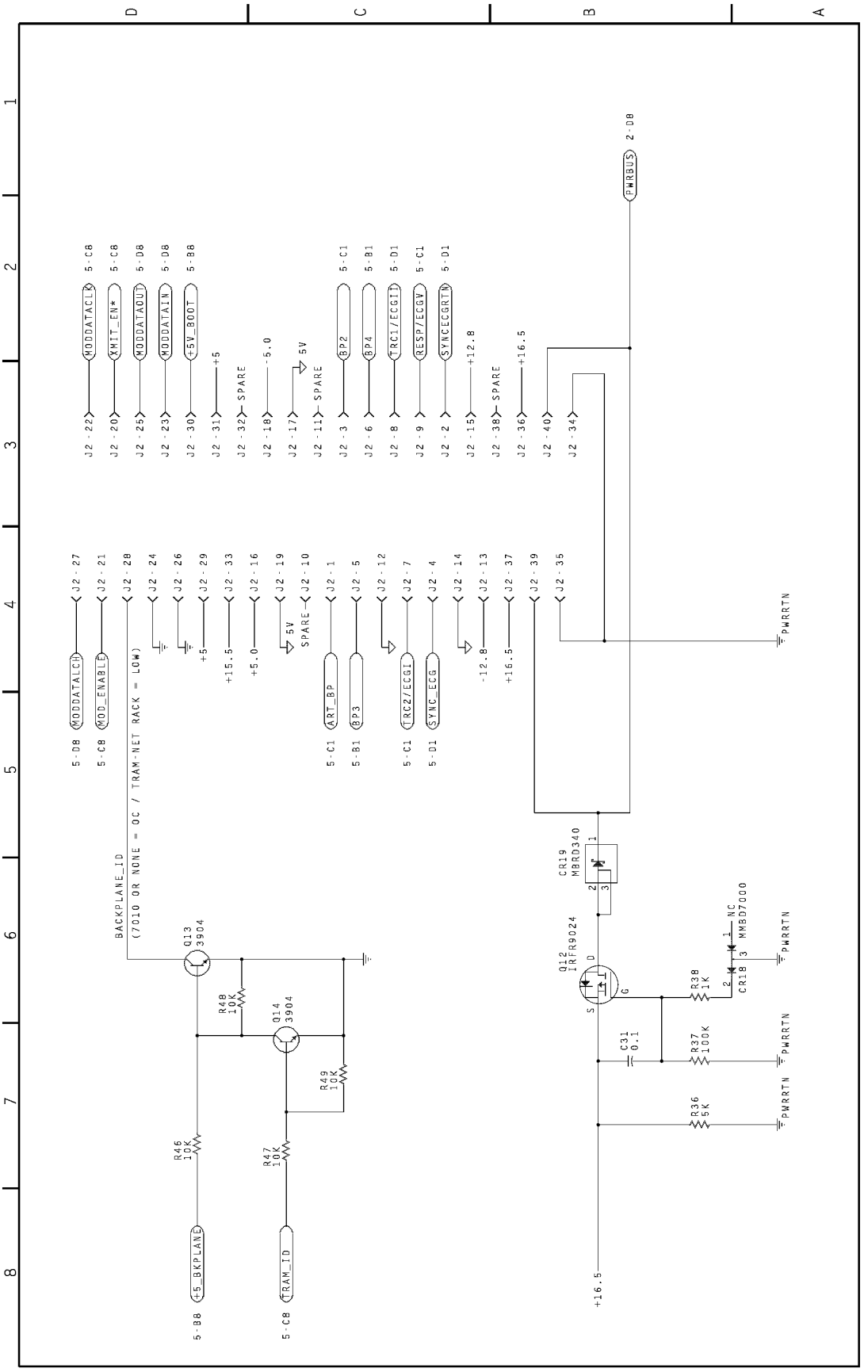
MODDATACLK
XMIT_EN*
MODDATAOUT
MODDATAIN
+5V_BOOT
+5
SPARE
-5.0
5V
SPARE
BP2
BP4
TRC1/ECG1
RESP/ECGV
SYNCECGRTN
+12.8
SPARE
+16.5
PWRBUS
MODDATALCH
MOD_ENABLE
BACKPLANE_ID
(7010 OR NONE = OC / TRAM-NET RACK = LOW)
+5
+15.5
+5.0
5V
SPARE
ART_BP
BP3
TRC2/ECG1
SYNC_ECG
-12.8
+16.5
PWRRTN
CR19
MBR0340
Q12
IRFR9024
Q13
3904
Q14
3904
R48
10K
R49
10K
R46
10K
R47
10K
R38
1K
R37
100K
R36
6K
C31
0.1
CR18
MMBD7000
+5_BKPLANE
TRAM_ID
+16.5

5 of 5

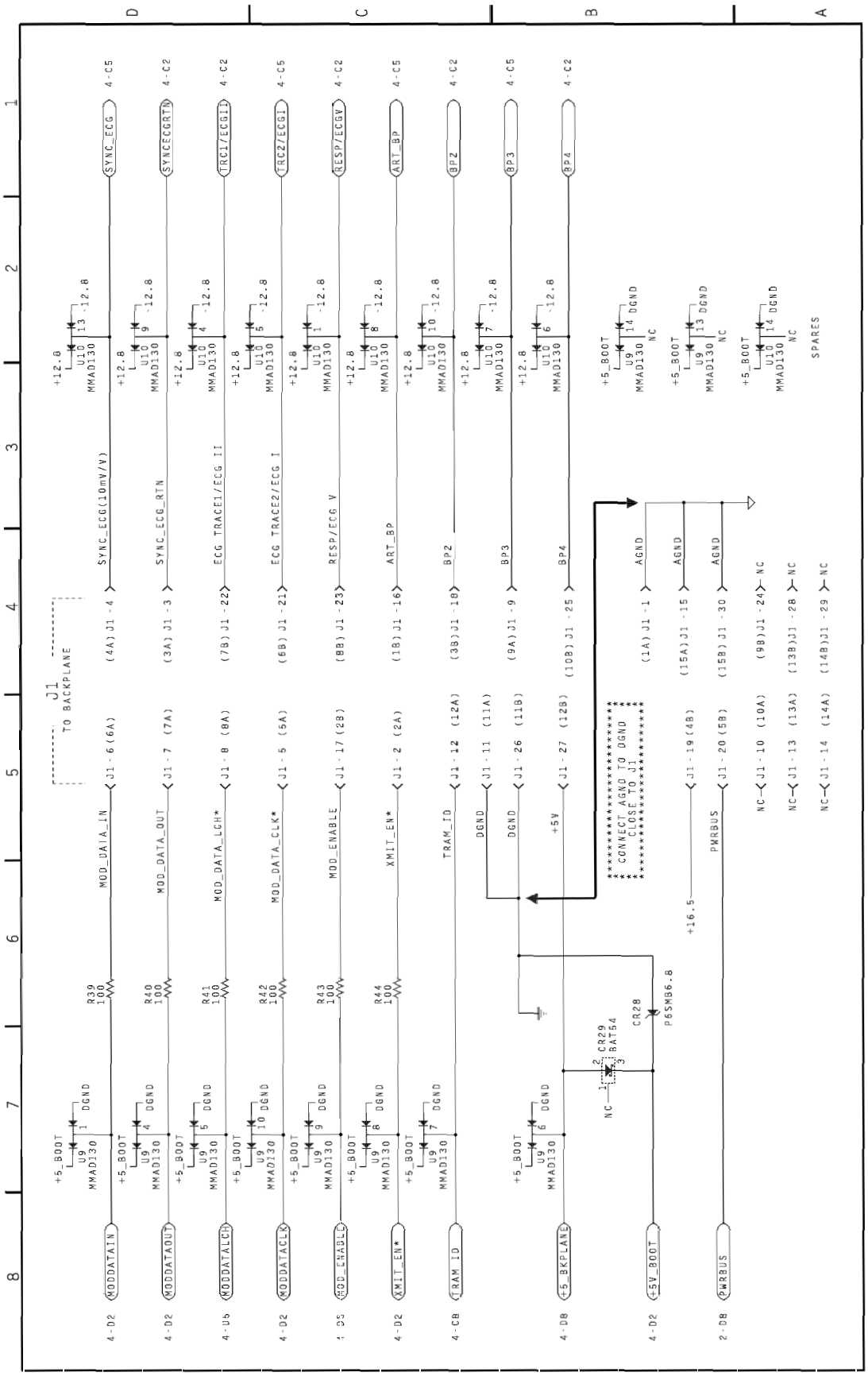
J1
TO BACKPLANE
MODDATAIN
MODDATAOUT
MODDATALCH
MODDATACLK
MOD_ENABLE
XMIT_EN*
TRAM_ID
+5_BKPLANE
+5V_BOOT
PWRBUS
SYNC_ECG
SYNCECGRTN
TRC1/ECG1
TRC2/ECG1
RESP/ECGV
ART_BP
BP2
BP3
BP4
SYNC_ECG(10mV/V)
SYNC_ECG_RTN
ECG TRACE1/ECG II
ECG TRACE2/ECG I
RESP/ECG V
ART_BP
BP2
BP3
BP4
MOD_DATA_IN
MOD_DATA_OUT
MOD_DATA_LCH*
MOD_DATA_CLK*
MOD_ENABLE
XMIT_EN*
TRAM_ID
DGND
+5V
AGND
PWRBUS
NC
SPARES
CONNECT AGND TO DGND
CLOSE TO J1
R39 100
R40 100
R41 100
R42 100
R43 100
R44 100
CR28
P6SMB6.8
CR29
BAT54
MMAD130
+12.8
-12.8
+5_BOOT
+16.5

For your notes

23 NON-ISOLATED INPUT PCB PN 401315

Parts Location Diagram PN 401315-003D **23-2**

Parts List PN 401315-003D **23-3**

Schematic Diagram PN 401315-003D **23-4**

Parts Location Diagram PN 401315-003D

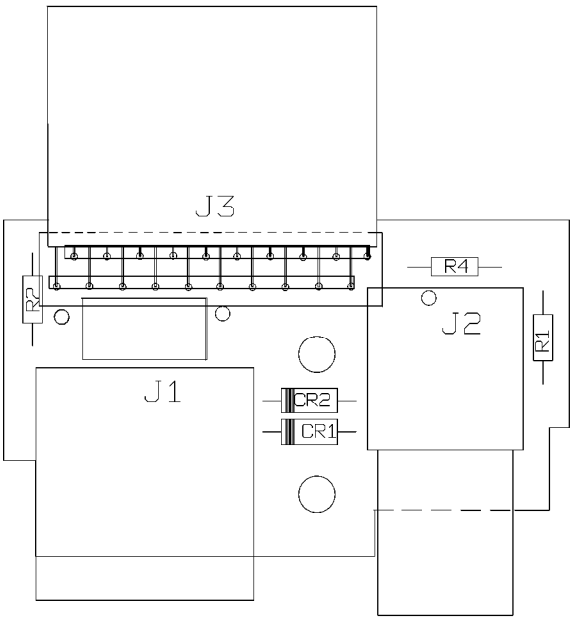

Parts List PN 401315-003D

Item	Parts List	Part Number	Qty
CR1, 2	Diode 1N4148	2004-148	2
J1	Conneector, Receptacle 12-Pin	403934-001	1
J2	Connector, Receptacle, 6-Pin	403933-001	1
J3	Flex Circuit Assembly	404149-001	1
R1	Res, MF, 10.0K, 1%, 1/4W	1023-287	1
R2	Res, MF, 100Ω, 1%, 1/4W	1023-096	1
R4	Res, MF, 4.75K, 1%, 1/4W	1023-256	1
-	Insulator (Used between J3 and circuit board.)	404608-001	1
-	Circuit Board	401315-001	1
-	Schematic Diagram	401315-003D	REF

Schematic Diagram PN 401315-003D

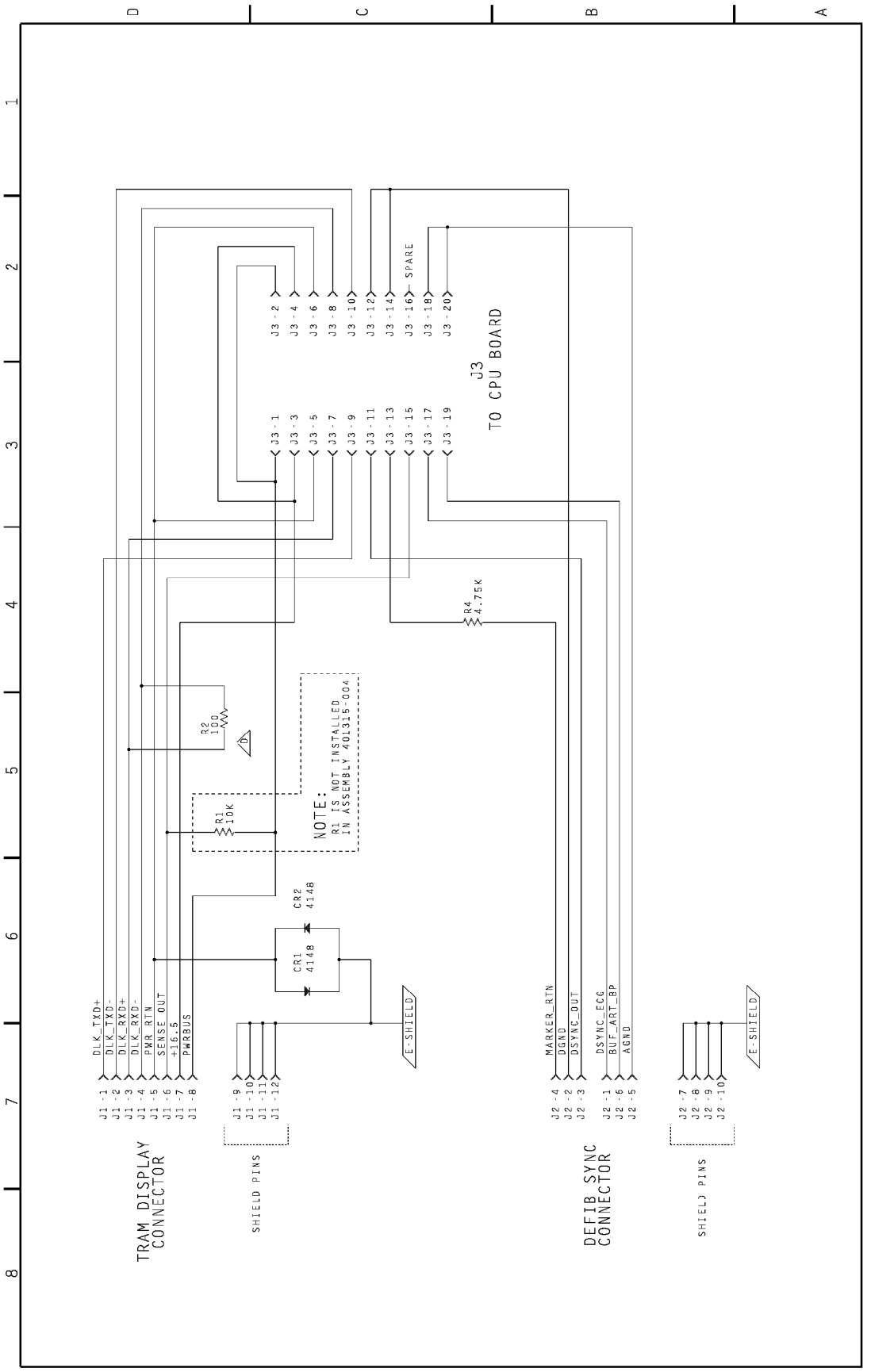

24 ISOLATED POWER SUPPLY PN 402329

Parts Location Diagram PN 402329-002N **24-2**

Parts List PN 402329-002N **24-3**

Schematic Diagram PN 402329-002N **24-5**

Parts Location Diagram PN 402329-002N

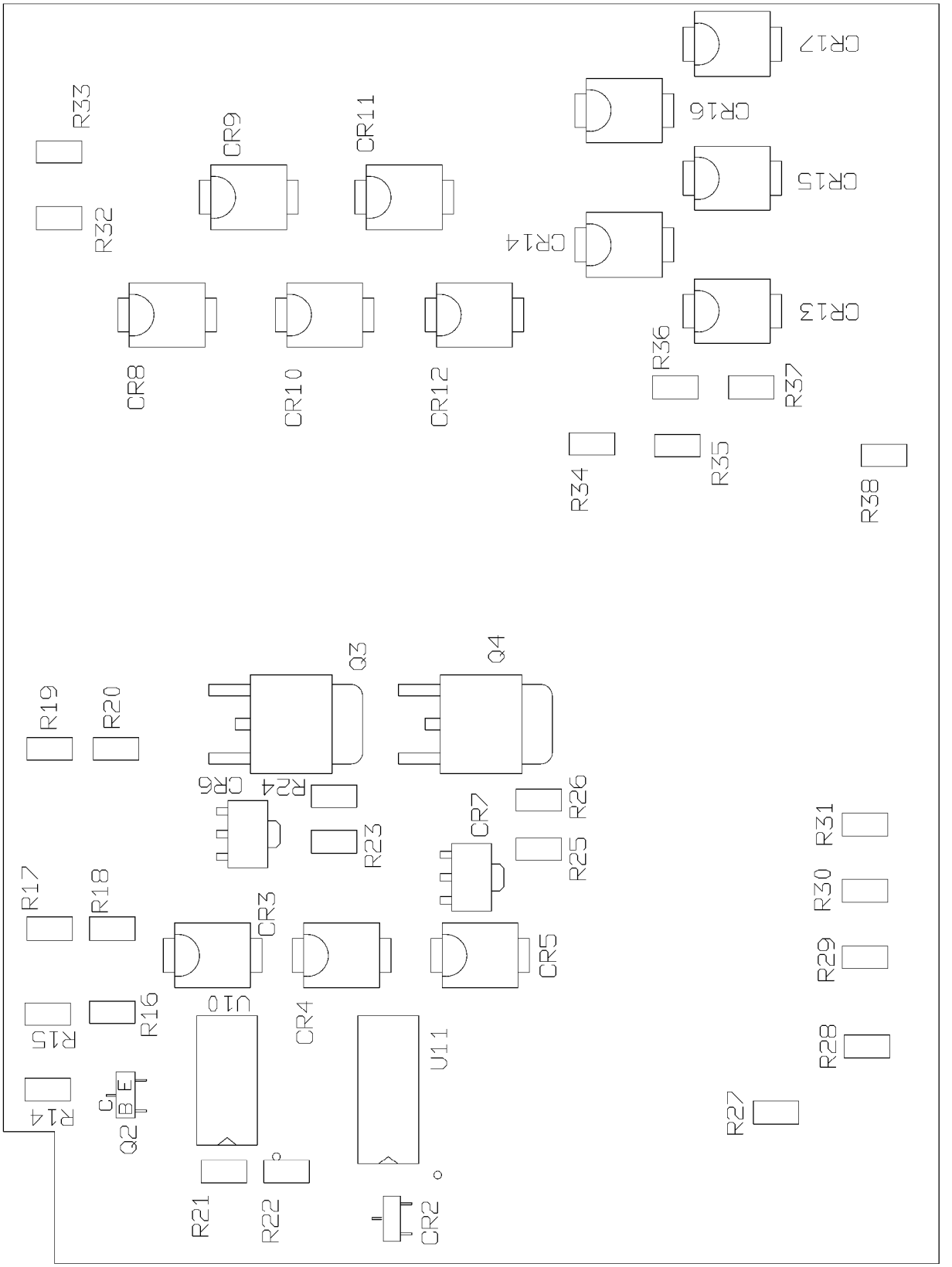

Parts List PN 402329-002N

Item	Parts List	Part Number	Qty
C1	Cap, Cer, 0.22µF, 20%, 50V, SM	1187-224	1
C2, 3, 4, 10, 11, 12	Cap, Tant, 82µF, 10%, 10V	1225-826	6
C5	Cap, Cer, 0.01µF, 10%, 100V, SM	403029-001	1
C6 - 9	Cap, Tant, 27µF, 10%, 20V	1135-276	4
C13	Cap, Cer, 270pF, 5%, 50V, SM	1181-271	1
C14, 18, 21, 22, 25, 27, 29, 30, 32	Cap, Cer, 0.1µF, 20%, 50V	404370-001	9
C15, 31	Cap, Cer, 100pF, 5%, 50V, SM	1181-101	2
C16, 17	Cap, Tant, 1µF, 10%, 16V, SM	403253-001	2
C19	Cap, Cer, 0.001µF, 5%, 50V, SM	1181-102	1
C20	Cap, Tant, 4.7µF, 20%, 10V, SM	1176-475	1
C23, 24	Cap, Cer, 0.0022µF, 5%, 100V, SM	403030-001	2
C26, 28	Cap, Tant, 47µF, 10%, 20V	1127-476	2
C33	Cap, Cer, 0.01µF, 5%, 50V, SM	1182-103	1
CR1	Diode Pair, Series, SM D7000	2013-201	1
CR2	Diode Pair, Common Anode, SM D2836	402544-001	1
CR3, 4, 5, 8, 9, 10	Diode, Schottky, Barrier, 1A, 40V, SM MBRS140T3	403187-001	6
CR6, 7	Diode, Zener, SM BZV49C18	403007-001	2
CR11, 12	Diode, Rectifier, 1A, 100V, SM MURS110T3	403190-001	2
CR13, 14, 15	Diode, Transient Voltage Suppressor, 5V, 600W P6SMB6.8AT1	403189-001	3
CR16, 17	Transorb, 15V, 5%, 600W SM6T15A	403188-001	2
E1	Surge Protector, 7.5kV, 15%	1931-001	1
E2	Surge Protector, 90V	1931-101	1
J1	Connector, Vertical, 16-Pin	1847-016	1
J2	Connector, Vertical, 14-Pin	1847-014	1
L1 - 4	Inductor, Bead	1426-001	4
L5	Inductor, Coupled, Critical Component	403281-001	1
L6	Choke, Common Mode, SM	403105-001	1
Q1, 2	Transistor, NPN, SM T3904	2511-001	2
Q3, 4	Transistor, MOSFET, N-Channel, SM IRFR024	403047-001	2
R1	Res, Var, 10K, Top-Adjust	403282-001	1
R2	Res, Cer, 40.2K, 10%, 1/4W, SM	1082-792	1
R3	Res, Cer, 150Ω, 1%, 1/8W, SM	1082-767	1
R4	Res, Cer, 43Ω, 10%, 1/4W, SM	403025-001	1
R5, 6, 9, 11, 17, 18, 30	Res, Cer, 10K, 1%, 1/8W, SM	1082-104	7
R7	Res, WW, 0.1Ω, 5%, 1/2W	1017-003	1
R8	Res, Cer, 240Ω, 5%, 1/8W, SM	1081-471	1
R10, 12	Res, Cer, 3.3Ω, 10%, 1/4W, SM	403026-001	2
R13, 34, 38	Res, 340Ω, 1%, 1/8W, SM	1082-790	3
R14	Res, Cer, 3.48K, 10%, 1/4W, SM	1082-919	1

Item	Parts List	Part Number	Qty
R15	Res, Cer, 8.06K, 10%, 1/4W, SM	1082-920	1
R16, 39	Res, Cer, 10Ω, 1%, 1/8W, SM	1082-786	2
R19	Res, Cer, 100Ω, 1%, 1/8W, SM	1082-755	1
R20	Res, Cer, 3.4K, 1%, 1/8W, SM	1082-759	1
R21	Res, Cer, 5.11K, 1%, 1/8W, SM	1082-784	1
R22	Res, Cer, 200K, 1%, 1/8W, SM	1082-200	1
R23, 25	Res, Cer, 2.21K, 1%, 1/8W, SM	1082-787	2
R24, 26	Res, Cer, 22Ω, 5%, 1/8W, SM	1081-220	2
R27	Res, Cer, 1K, 1%, 1/8W, SM	1082-103	1
R28	Res, Cer, 51.1K, 10%, 1/4W, SM	1082-772	1
R29, 31, 35	Res, Cer, 4.75K, 1%, 1/8W, SM	1082-760	3
R32	Res, Cer, 511Ω, 10%, 1/4W, SM	1082-794	1
R33	Res, Cer, 34.8K, 10%, 1/4W, SM	1082-791	1
R36	Res, Cer, 51.1Ω, 10%, 1/4W, SM	1082-789	1
R37	Res, Cer, 2K, 1%, 1/8W, SM	1082-201	1
T1	Transformer, SM	403106-001	1
U1	Volt Rgltr, SM TL431ACD	403046-001	1
U2	Isolator, Optically Coupled OPI120	405050-001	1
U3, 8	Buffer, 3-State Output, Quad, SM HC126	403033-001	2
U4, 5, 6	Isolator, Optically Coupled TLP582	402153-002	3
U7	Pulse Width Modulator, SM UC3846	402990-001	1
U9	Isolator, Optically Coupled, SM MOC213	403040-001	1
U10	Inverter, Schmitt Trigger, Hex, SM HC14	3038-014	1
U11	Counter, Down, Synchronous, 8-Bit, SM HC40103	401432-001	1
Y1	Oscillator, CMOS, 4MHz	402987-001	1
-	Heat Shrink Tubing (Used on L1 - 4)	404747-001	AR
-	Circuit Board	402329-001F	1
-	Schematic Diagram	402329-003E	–

Schematic Diagram PN 402329-002N

1 of 3

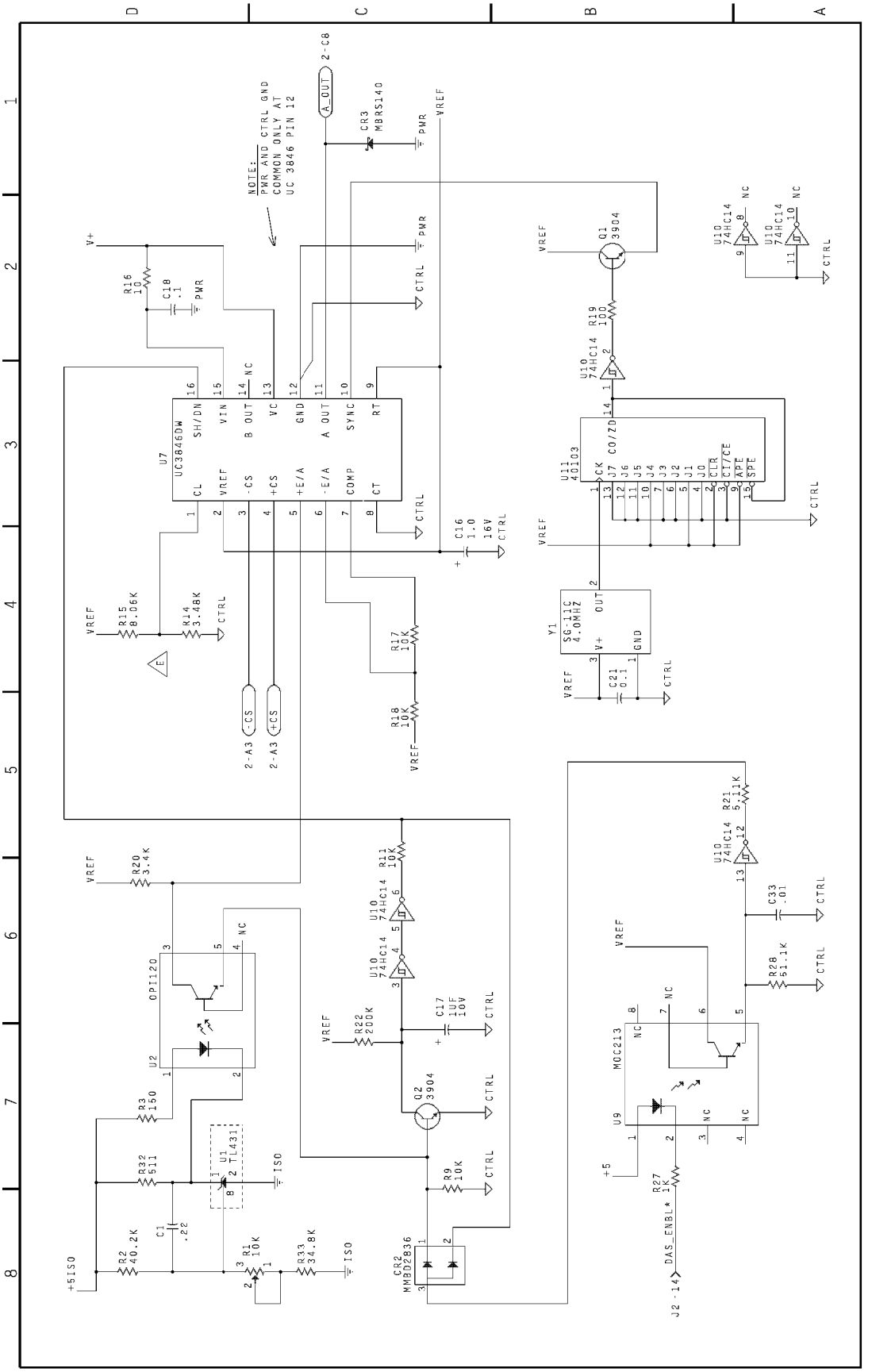

2 of 3

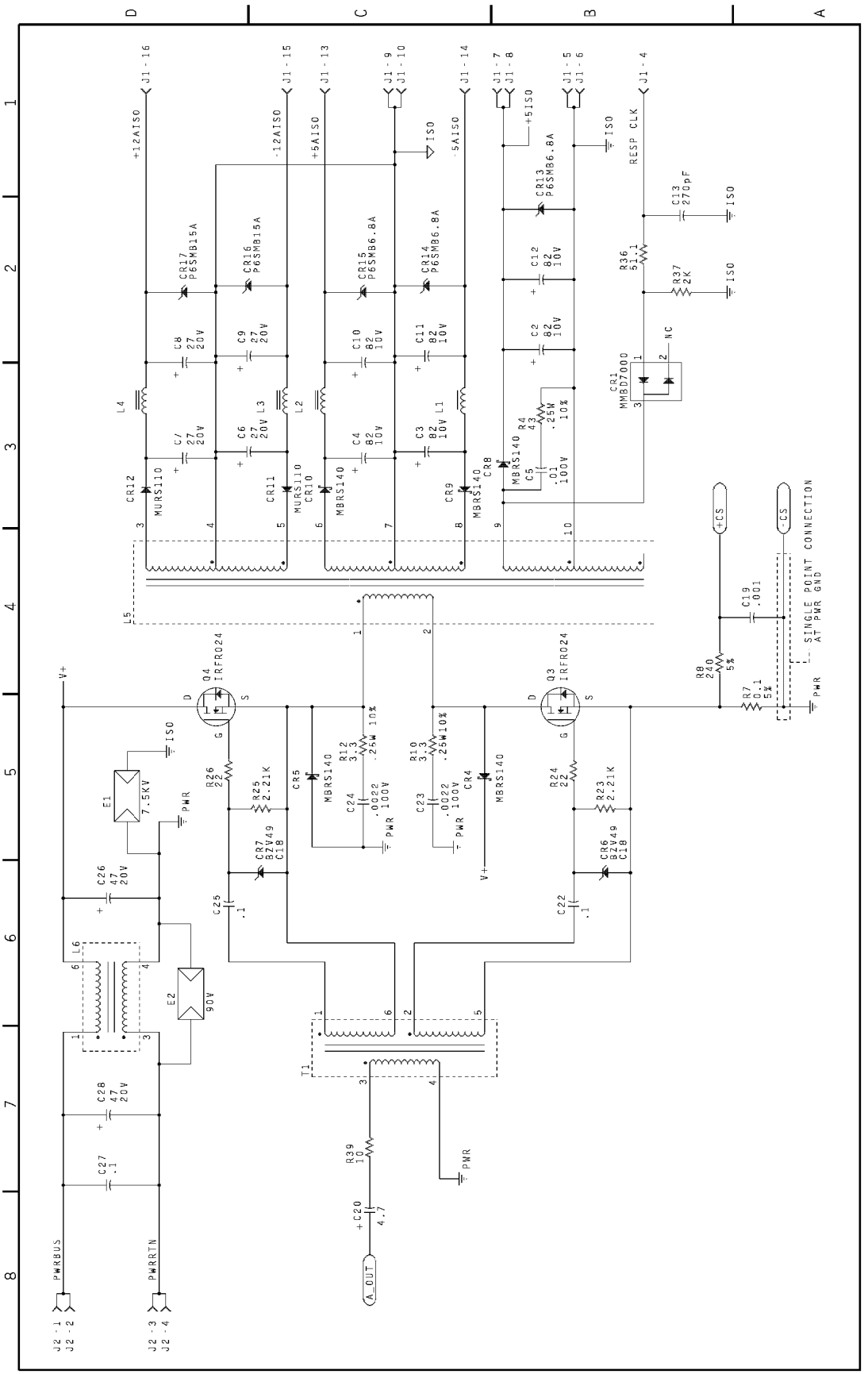
D
C
B
A
1
2
3
4
5
6
7
8
J1-16
+12AISO
J1-15
-12AISO
J1-13
+5AISO
J1-9
J1-10
ISO
J1-14
-5AISO
J1-7
J1-8
+5ISO
J1-5
J1-6
J1-4
RESP CLK
CR17 P6SMB15A
CR16 P6SMB15A
CR15 P6SMB6.8A
CR14 P6SMB6.8A
CR13 P6SMB6.8A
C13 270pF
C8 27 20V
C9 27 20V
C10 82 10V
C11 82 10V
C12 82 10V
R36 51.1
R37 2K
C2 82 10V
CR1 MMBD7000
NC
L4
C7 27 20V
C6 27 20V
L3
L2
C4 82 10V
C3 82 10V
L1
R4 43 .25W 10%
CR12 MURS110
CR11 MURS110
CR10 MURS140
CR9 MBRS140
CR8 MBRS140
C5 .01 100V
L5
+CS
-CS
C19 .001
SINGLE POINT CONNECTION AT PWR GND
V+
Q4 IRFR024
Q3 IRFR024
R8 240 5%
R7 0.1 5%
PWR
R26 22
R25 2.21K
CR5 MBRS140
R12 3.3 .25W 10%
C24 .0022 100V
R10 3.3 .25W 10%
C23 .0022 100V
CR4 MBRS140
R24 22
R23 2.21K
E1 7.5KV
CR7 BZV49 C18
CR6 BZV49 C18
C25 .1
C22 .1
C26 47 20V
L6
E2 90V
T1
C28 47 20V
C27 .1
R39 10
+C20 4.7
A_OUT
PWRBUS
PWRRTN
J2-1
J2-2
J2-3
J2-4

3 of 3

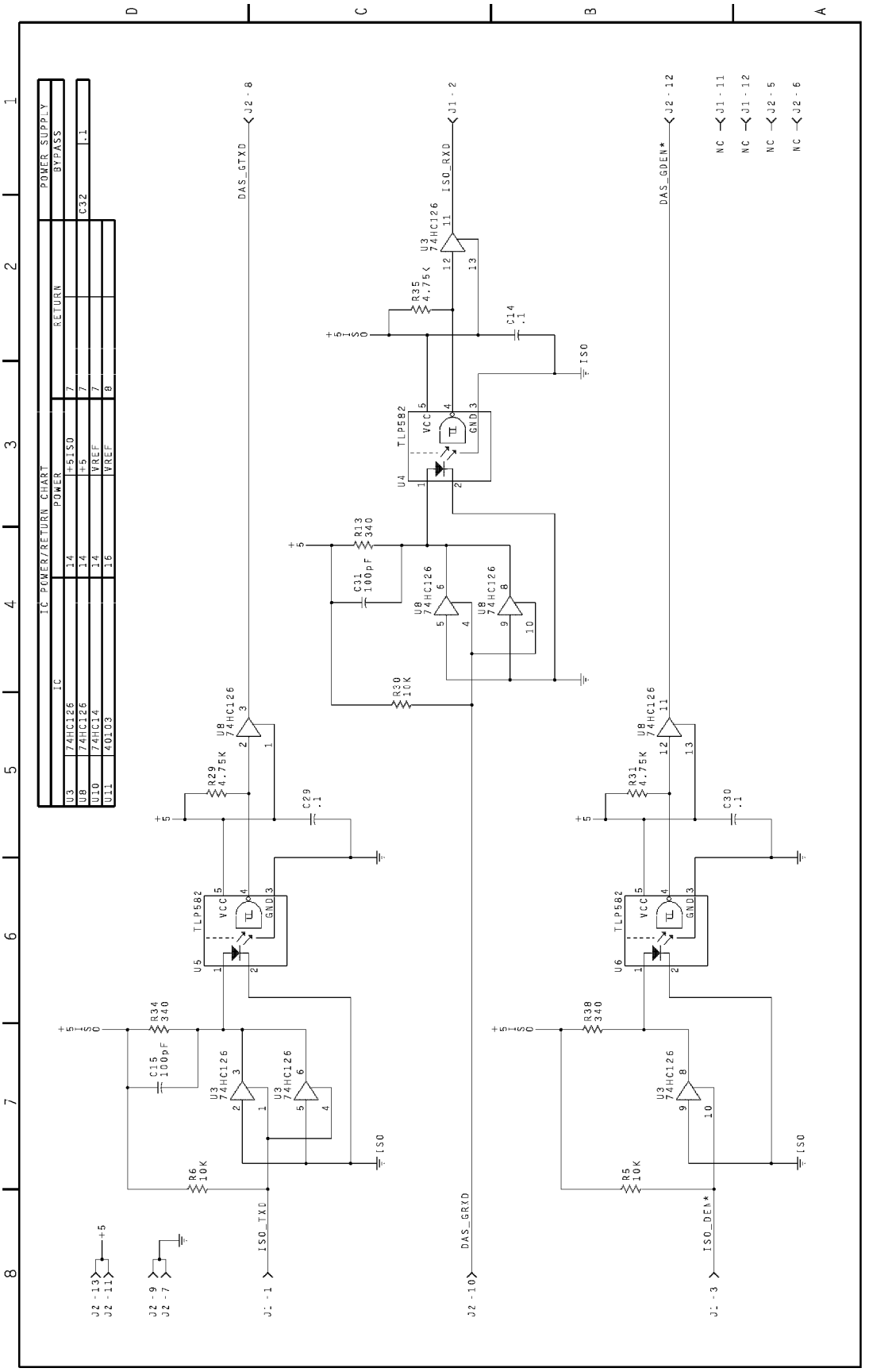
IC POWER/RETURN CHART
IC
POWER
RETURN
POWER SUPPLY BYPASS
U3 74HC126 14 7
U8 74HC126 14 7
U10 74HC14 14 7
U11 4013 16 8
+5ISO
+5
VREF
VREF
C32 .1
DAS_GTXD
ISO_RXD
DAS_GDEN*
DAS_GRXD
ISO_TXD
ISO_DEN*
NC
TLP582
VCC
GND
U3 74HC126
U8 74HC126
R35 4.75K
R13 340
R30 10K
C31 100pF
C14 .1
R29 4.75K
R31 4.75K
C29 .1
C30 .1
R34 340
R38 340
C15 100pF
R6 10K
R5 10K
ISO

For your notes

25 POWER INDICATOR PCB PN 403170/800006

Parts Location Diagram PN 403170-008B/009A/011A **25-2**

Parts List PN 403170-008B/009A/011A **25-3**

Schematic Diagram PN 403170-008B/009A/011A **25-4**

Parts Location Diagram PN 800006-001D **25-5**

Parts List PN 800006-001D **25-6**

Schematic Diagram PN 800006-001D **25-7**

Parts Location Diagram PN 403170-008B/009A/011A

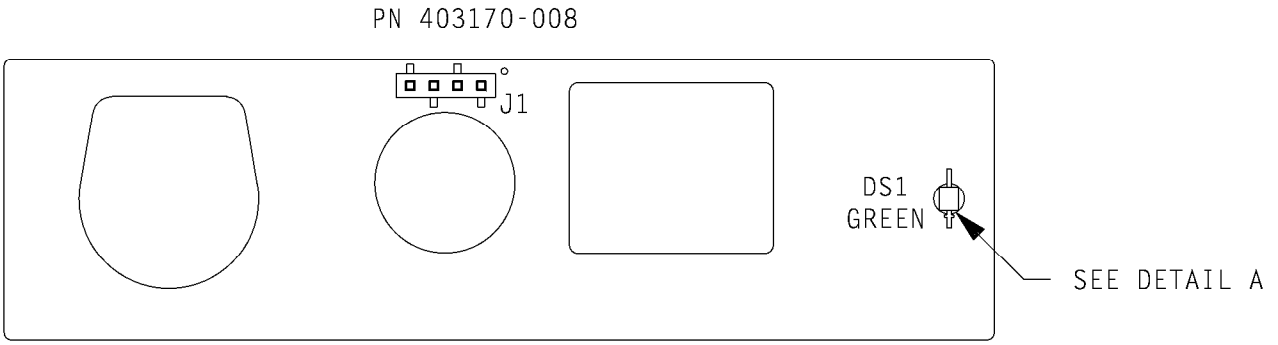

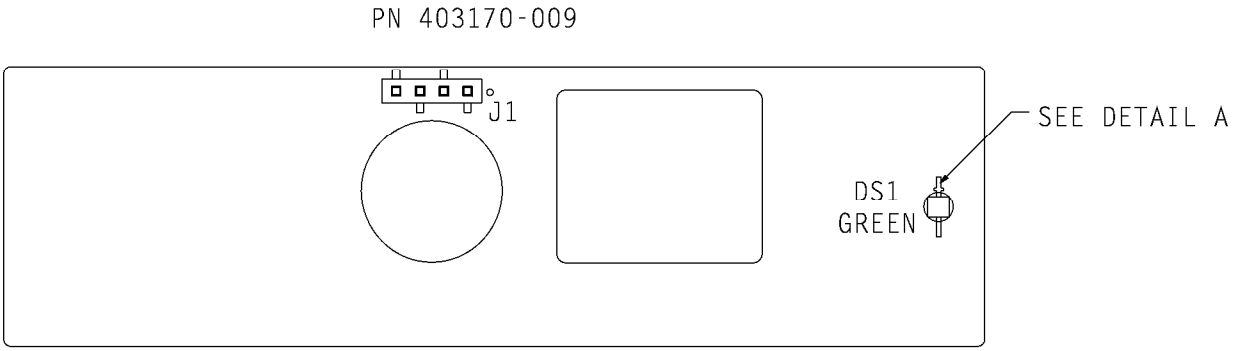

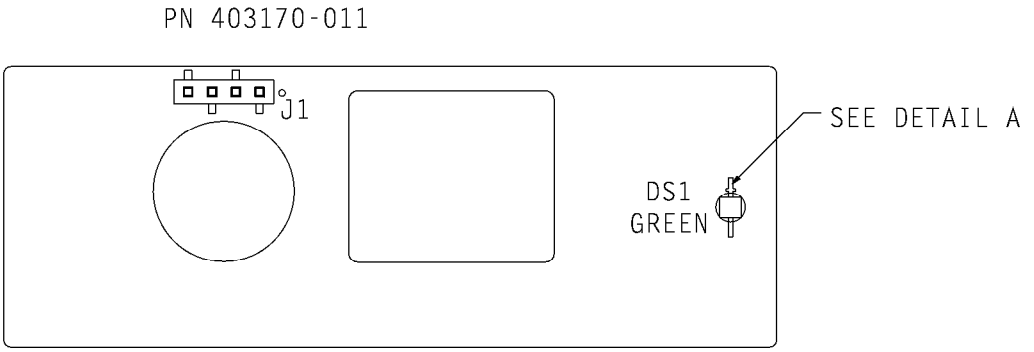

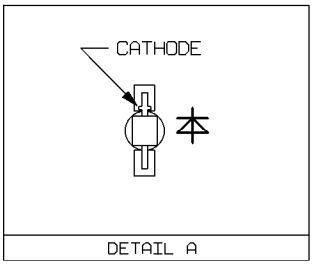

Parts List PN 403170-008B/009A/011A

Item	Parts List	Part Number	Qty
J1	Connector, Male, 4-Pin	405237-002	1
DS1	Diode, Light-Emitting, SM, Green	405033-022	1
-	Circuit Board (Use on PN 403170-008 Only)	403170-005	1
-	Circuit Board (Use on PN 403170-009 Only)	403170-007	1
-	Circuit Board (Use on PN 403170-011 Only)	403170-010	1

Schematic Diagram PN 403170-008B/009A/011A

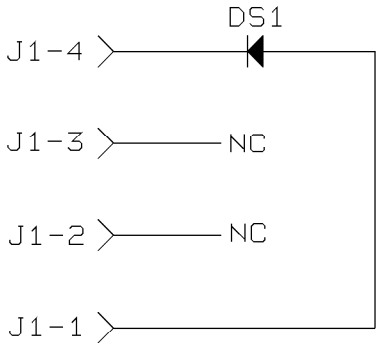

Parts Location Diagram PN 800006-001D

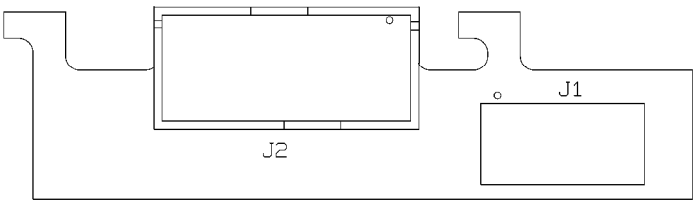

Parts List PN 800006-001D

Item	Parts List	Part Number	Qty
J1	Connector, Vertical, 10-Pin	1847-010	1
J2	Connector, PC Header, 10-Pin	1823-310	1
-	Circuit Board	800007-001	1

Schematic Diagram PN 800006-001D

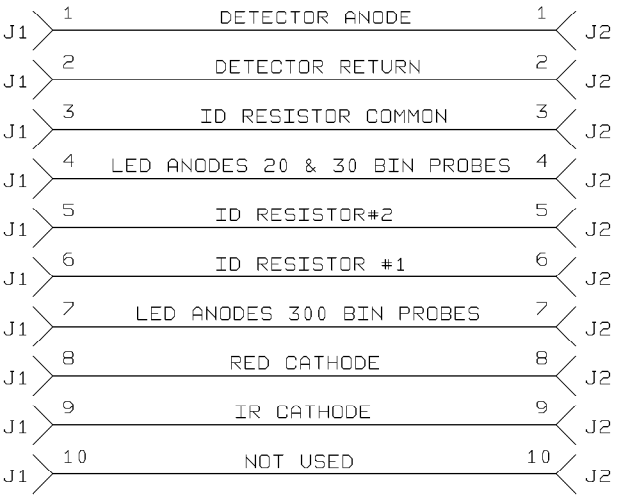

For your notes

26 FAN ASSEMBLY PN 403549

Parts Location Diagram PN 403549-002F **26-2**

Parts List PN 403549-002F **26-3**

Schematic Diagram PN 403549-003B **26-4**

Parts Location Diagram PN 403549-002F

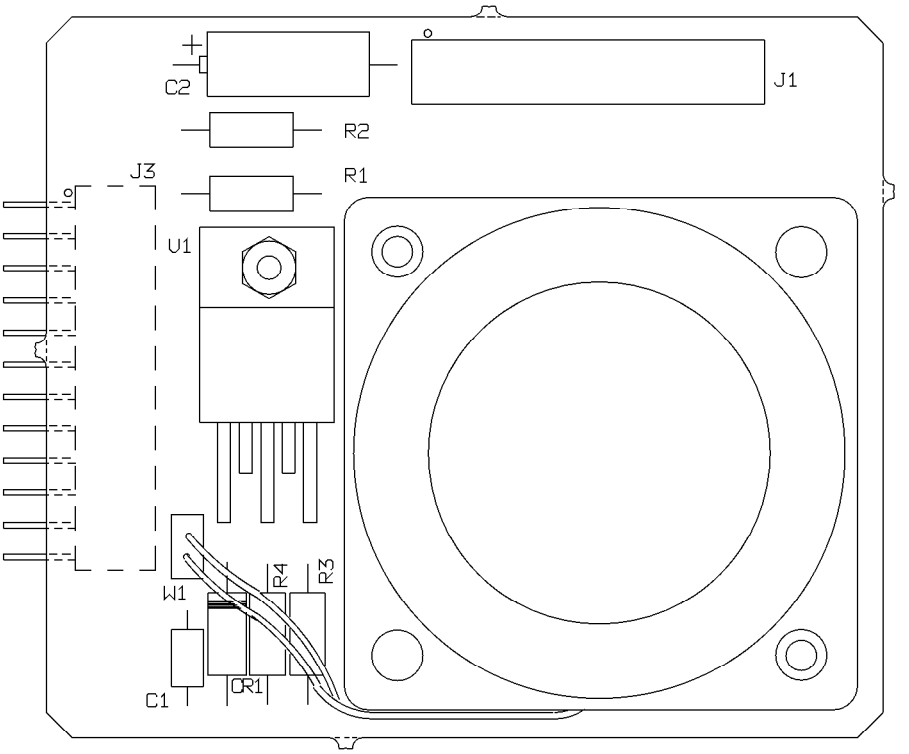

Parts List PN 403549-002F

Item	Parts List	Part Number	Qty
C1	Cap, Cer, 0.33µF, +80/-20%, 50V	1110-334	1
C2	Cap, Tant, 27µF, 10%, 20V	1135-276	1
CR1	Diode, Rectifier, 2A, 50V 1N4001	2401-001	1
J1	Connector, Receptacle, 22-Pin	404212-001	1
J3	Connector, PC Header, 24-Pin	1848-124	1
R1	Res, MF, 150Ω, 1%, 1/8W	1010-113	1
R2	Res, MF, 10.0K, 1%, 1/8W	1010-287	1
R3	Res, MF, 8.45K, 1%, 1/8W	1010-280	1
R4	Res, MF, 1.0K, 1%, 1/8W	1010-191	1
U1	Volt Rgltr, Adj, TO220 LM2941CT	403609-001	1
-	Fan, 12 V dc, 4.6 CFM	404741-001	1
-	Screw, 8-32 x 3/8	404982-001	2
-	Nut, Hex, Nylon, 4-40	405141-001	1
-	Washer, Nylon, No 5	4550-105	1
-	Screw, PNH, Nylon, 4-40 x 1/4	4779-408	1
-	Circuit Board	403549-001B	1
-	Schematic Diagram	403549-003B	REF

Schematic Diagram PN 403549-003B

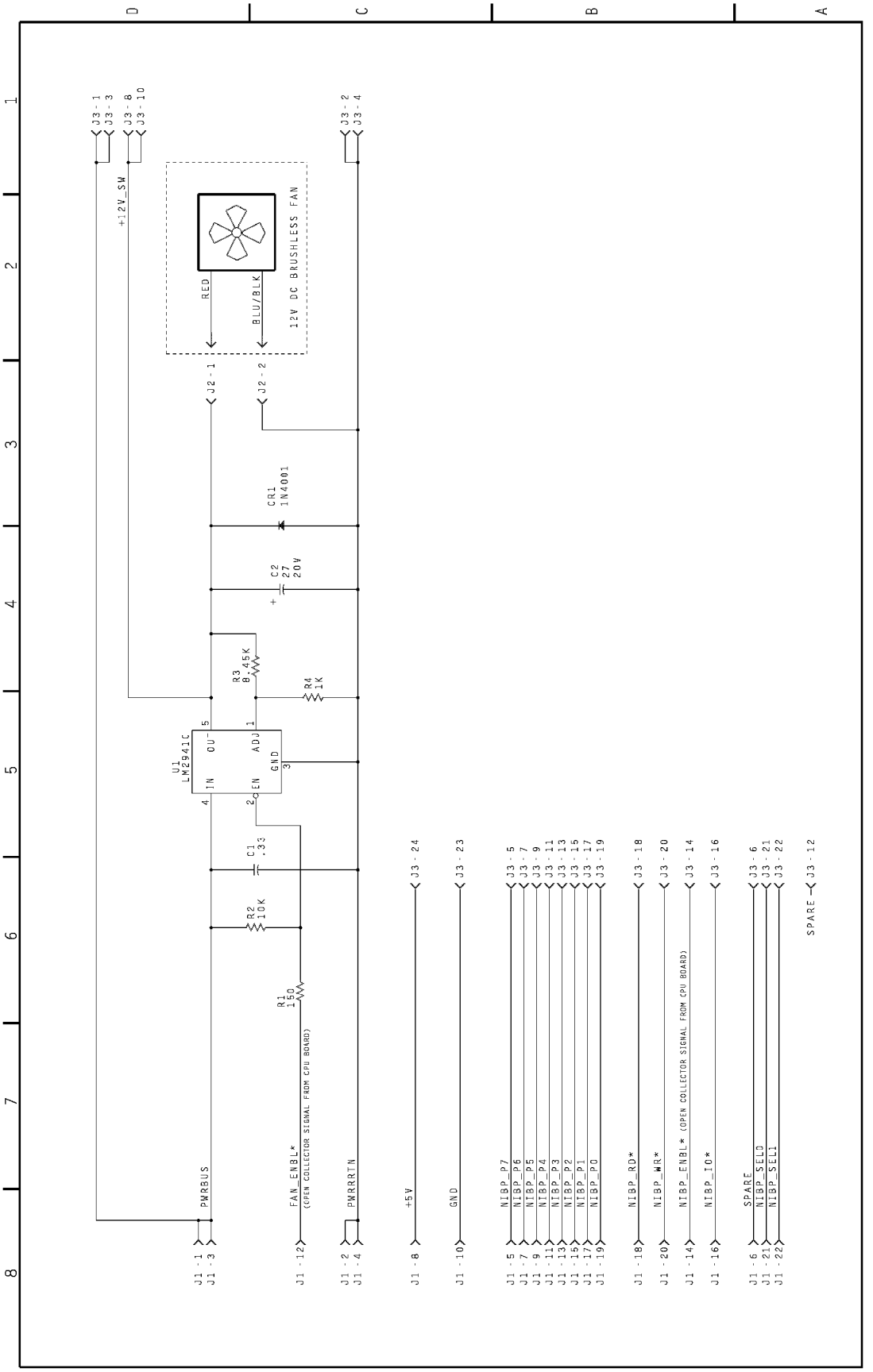

27 MODULE PROCESSOR PCB PN 800210

General **27-2**

Parts Location Diagram PN 800210-005B **27-3**

Parts List PN 800210-005B **27-4**

Schematic Diagram PN SD800210-002B **27-7**

Assembly Revisions PN 800210 ..... **27-27**

Parts List PN 800210-001E/002B **27-28**

Schematic Diagram PN SD800210-001C **27-31**

General

There are three different versions of the module processor PCB:

- pn 800210-001, which was used first in all of the A-series modules; and
- pn 800210-002, which was introduced in the SL-series modules, and then added to the A-series modules; and
- pn 800210-005 replaced both of the first two versions.

NOTE
You may replace either version -001 or -002 board with a -005 board, but do not replace a -005 with a -001 or -002 circuit board.

Parts Location Diagram PN 800210-005B

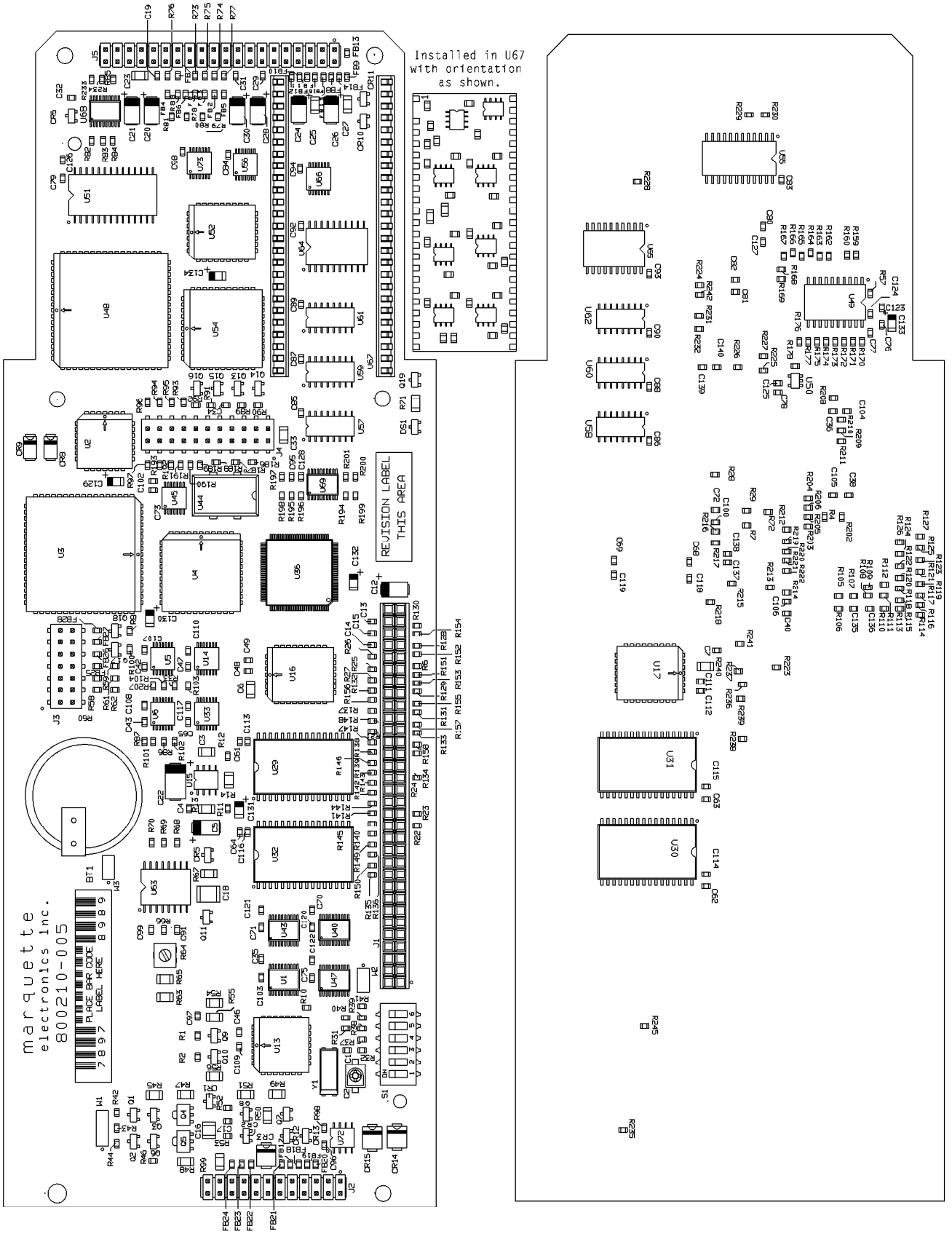

Parts List PN 800210-005B

Item	Parts List	Part Number	Qty
BT1	Battery, Lithium, 3V, Disk	413191-001	1
C1	Cap, NPO, 27pF, 5%, 50V, SM	411576-019	1
C2	Cap, Var, 4 - 25pF, SM	401977-001	1
C3, 6, 7, 23, 25, 27, 33	Cap, Cer, 0.1µF, 20%, 50V	404370-001	7
C4, 97	Cap, Cer, 0.1µF, 5%, 50V, SM	411575-012	2
C5, 24, 26	Cap, Tant, 4.7µF, 20%, 20V, SM	402004-001	3
C12, 20, 21, 28, 30	Cap, Tant, 10µF, 20%, 16V, SM	1176-106	5
C13-15, 17, 19, 29, 31, 32, 34-36, 38, 40, 42, 43, 46-48, 61-65, 68-73, 75-81, 83-96, 98, 99, 112, 136, 137, 140	Cap, Cer, 0.1µF, 5%, 16V	411575-002	56
C16	Cap, Cer, 0.22µF, 20%, 50V, SM	1187-224	1
C18	Cap, Cer, 0.47µF, 20%	1187-474	1
C22	Cap, Tant, 10µF, 20%, 25V, SM	1152-106	1
C49, 82, 100, 102-111, 113-128, 135, 138, 139	Cap, Cer, 1000pF, 5%, 50V, SM	411575-003	32
C129-134	Cap, Tant, 1.0µF, 10%, 16V, SM	406883-002	6
CR1, 6	Diode, Schottky, SM BAT54	401985-001	2
CR2, 10, 11, 12, 13	Diode Pair, Series, SM D7000	2013-201	5
CR3	Diode, Transient Voltage Suppression, SM P6SMB20AT1	403939-001	1
CR5	Diode, SM MMAD4148	401980-001	1
CR8, 9	Diode, Schottky, Barrier, 1A, 40V, SM MBRS140T3	403187-001	2
CR14, 15	Diode, Transient Voltage Suppressor, Bi-Directional, 6.8V, 600W	404121-001	1
DS1	Diode, Light-Emitting (Red/Green) LDGR 2340	402428-001	1
FB1-4, 7-16, 21-24, 28	Ferrite Bead BLM11A20	414061-001	19
FB5, 6, 17-20, 25-27	Ferrite Bead BLM11A12	416171-001	9
J1	Connector, PC Header, 64-Pin	1847-064	1
J2	Connector, PC Header, 24-Pin, Vertical	1778-224	1
J3	Connector, PC Header, 14-Pin	416146-001	1
J4	Connector, PC Header, 22-Pin	416146-002	1
J5	Connector, PC Header, 40-Pin	1778-240	1
Q1-3, 6-10, 14, 16, 18, 19	Transistor, NPN, SM T3904	2511-001	12
Q4, 5	Transistor, NPN, SM BCX56-1	2712-056	2
Q11	Transistor, PNP, SM T4403	401978-001	1
Q13, 15, 17	Transistor, PNP, SM T3906	2511-101	3
R1, 2, 28, 57, 69, 70	Res, Cer, 1K, 1%, 1/16W, SM	410334-008	6

Item	Parts List	Part Number	Qty
R4, 72, 143-158, 202	Res, Cer, 100Ω, 1%, 1/16W, SM	410334-003	19
R6, 10-12, 22-24, 26, 27, 31, 32, 37-41, 44, 52, 53, 58, 59, 68, 88, 98, 128-142	Res, Cer, 10K, 1%, 1/16W, SM	410334-013	39
R7, 105-127, 203-206, 208-222, 224-227, 229, 230, 242, 245	Res, Cer, 30.1Ω, 1%, 1/16W, SM	410334-109	1
R8, 46, 90, 92	Res, Cer, 1.50K, 1%, 1/16W, SM	410334-080	4
R13	Res, Cer, 200K, 0.1%, 1/8W, SM	1067-832	1
R14	Res, Cer, 22.9K, 0.1%, 1/8W, SM	1067-833	1
R21, 60-62, 93-97, 186-193	Res, Cer, 150Ω, 1%, 1/16W, SM	410334-028	17
R25, 29, 33, 82, 83-87, 194-201	Res, Cer, 100K, 1%, 1/16W, SM	410334-019	17
R42, 43, 73, 74-77, 89, 91, 100	Res, Cer, 4.75K, 1%, 1/16W, SM	410334-010	10
R45, 49, 54	Res, Cer, 3.4K, 1%, 1/8W, SM	1082-759	3
R47, 48	Res, Cer, 49.9 Ω, 1%, 1/8W, SM	1082-799	2
R50, 55, 56	Res, Cer, 34.8K, 10%, 1/4W, SM	1082-791	3
R51	Res, Cer, 249 Ω, 1%, 1/8W, SM	1082-793	1
R63	Res, Cer, 2.4M, 5%, 1/8W, SM	1081-484	1
R64	Res, Var, 500K, Top Adjust	401979-001	1
R65	Res, Cer, 3.9M, 5%, 1/8W, SM	1081-485	1
R66	Res, Cer, 200Ω, 1%, 1/16W, SM	410334-044	1
R67	Res, Cer, 22M, 5%, 1/8W, SM	1081-486	1
R71, 99	Res, 340 Ω, 1%, 1/8W, SM	1082-790	2
R78-81	Res, Cer, 681Ω, 1%, 1/16W, SM	410334-065	4
R101-104, 159, 160,162-178, 207, 223, 228, 231-241	Res, Cer, 49.9Ω, 1%, 1/16W, SM	410334-040	37
S1	Switch, Dual In-Line, 6-Station, SM	401960-001	1
U1, 43, 47	Buffer/Driver, Octal, SM VHC541	3057-541	3
U2	EPLD, 68000 Interrupt Encoder, PLCC	404570-001	1
U3	Microprocessor, 16-MHz, PLCC 68HC000	401968-001	1
U4	EPLD, 68000 Bus Control, PLCC	408137-004	1
U5, 66	Inverter, Hex, SM VHC04	3057-004	2
U6, 14, 33, 56	OR Gate, 2-Input, Quad , SM VHC32	3057-032	5
U13	Clock/Timer, SM DP8570	401970-001	1
U15	Volt Rgltr, Adj, SM LP2951A	3076-001	1
U16, 17	EEPROM, Flash, 2K x 8-Bit, 90nS, PLCC	408792-002	2
U29, 30, 31, 32	RAM, Static, 128K x 8-Bit, 70nS, SM 628128	406255-002	4
U36	RAM, CMOS, Dual Port, 64K x 8-Bit, SM TQFP	415860-001	1
U40, 69	Transceiver, Bus, Octal, SM VHC245	3057-245	2
U44	Oscillator, CMOS, 14.7456MHz, SM	401480-001	1

Item	Parts List	Part Number	Qty
U45	Flip-Flop, Type D, Dual, SM VHC74	3057-074	1
U48	PAL, Programmed, Communication Control, PLCC 80C152JB	400368-001	1
U49	Latch, Transparent, Three-State Output, Octal, SM HC573	401971-001	1
U50	EPROM, Programmed, Boot Code, PLCC	409035-001	1
U51	RAM, Static, 32K x 8-Bit , SM 62256FLP	3202-256	1
U52	EPROM, Programmed, 80C152 Boot Code, PLCC	404904-002	1
U54	EPLD, Communication Interface, PLCC	408139-001	1
U55	Decoder/Demultiplexer, 4-Line-to-16-Line, SM HC154	404210-001	1
U57, 58	Shift Register, 8-Bit, Serial Input, Serial/Parallel Output, Tri-State Output, SM HC595	401969-001	2
U59, 60, 61, 62	Shift Register, Parallel Load, 8-Bit, SM HC165	401972-001	4
U63	Microprocessor Support Circuit, SM MAX695	401966-001	1
U64, 65	Register, 8-Bit, SM HC273	3038-273	2
U67	Hybrid, Analog Output	401205-001	1
U68	Buffer, Three-State Output, Octal, SM VHC244	3057-244	1
U72	Line Driver/Receiver, Differential, SM DS8921AM	404013-001	1
W1-1, W1-2, W1-3, W2-1, W2-2, W3-1, W3-2	Socket, Mini	1818-201	7
Y1	Crystal, 32.768kHz, SM	402085-001	1
-	Jumper, Mini	1859-201	2
-	Lubricant, Anti-Fretting (For U67)	410286-001	1
-	Mounting Pad, Battery (For BT1)	404368-001	1
-	Insulator, Battery (For BT1)	415683-001	1
-	Socket, Hybrid (For U67)	404596-001	2
-	Circuit Board	800211-002A	1
-	Schematic Diagram	SD800210-002B	-

Schematic Diagram

PN SD800210-002B

1 of 20

NOTE: For PN 800210-005 PCB

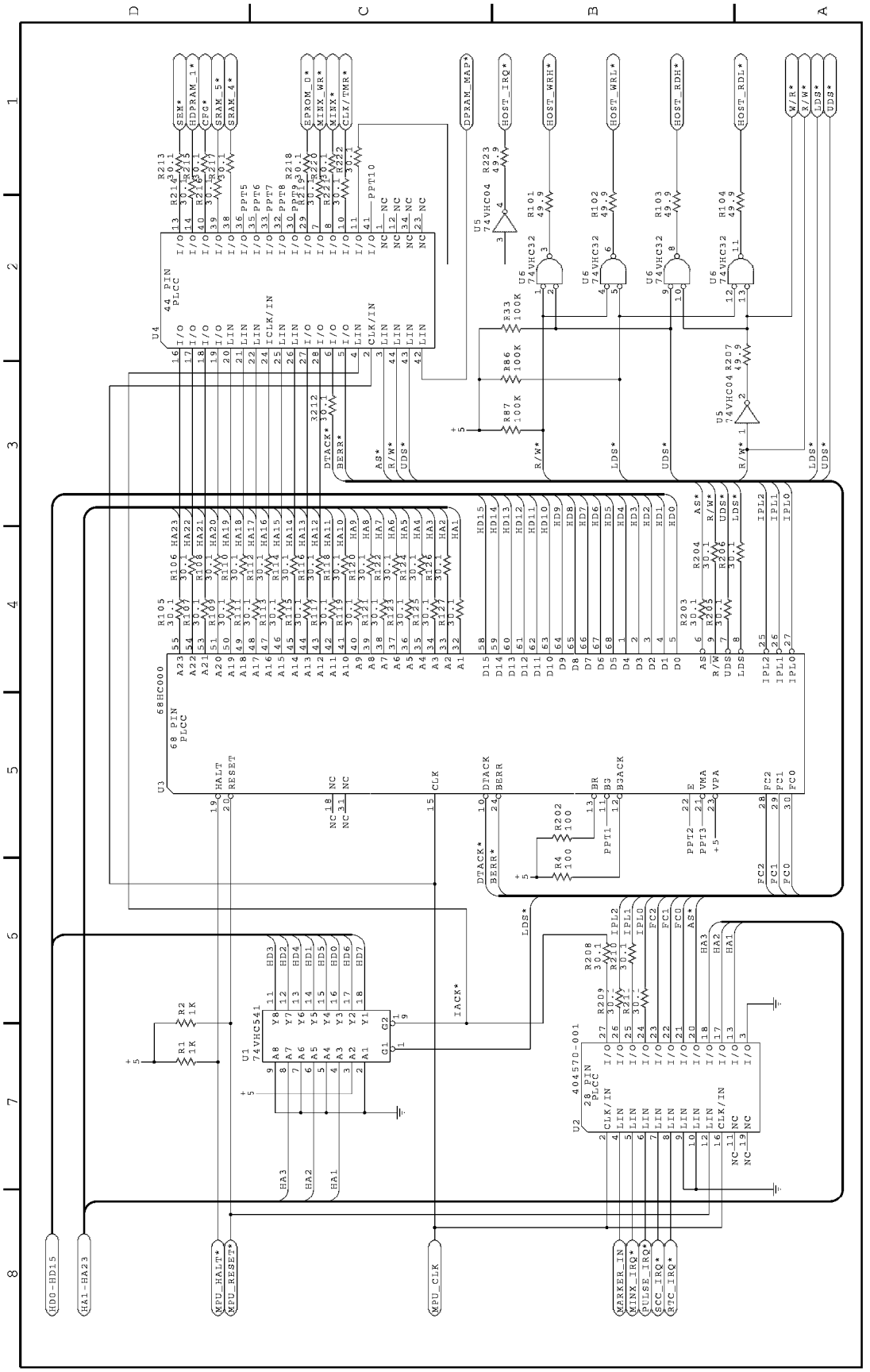

2 of 20

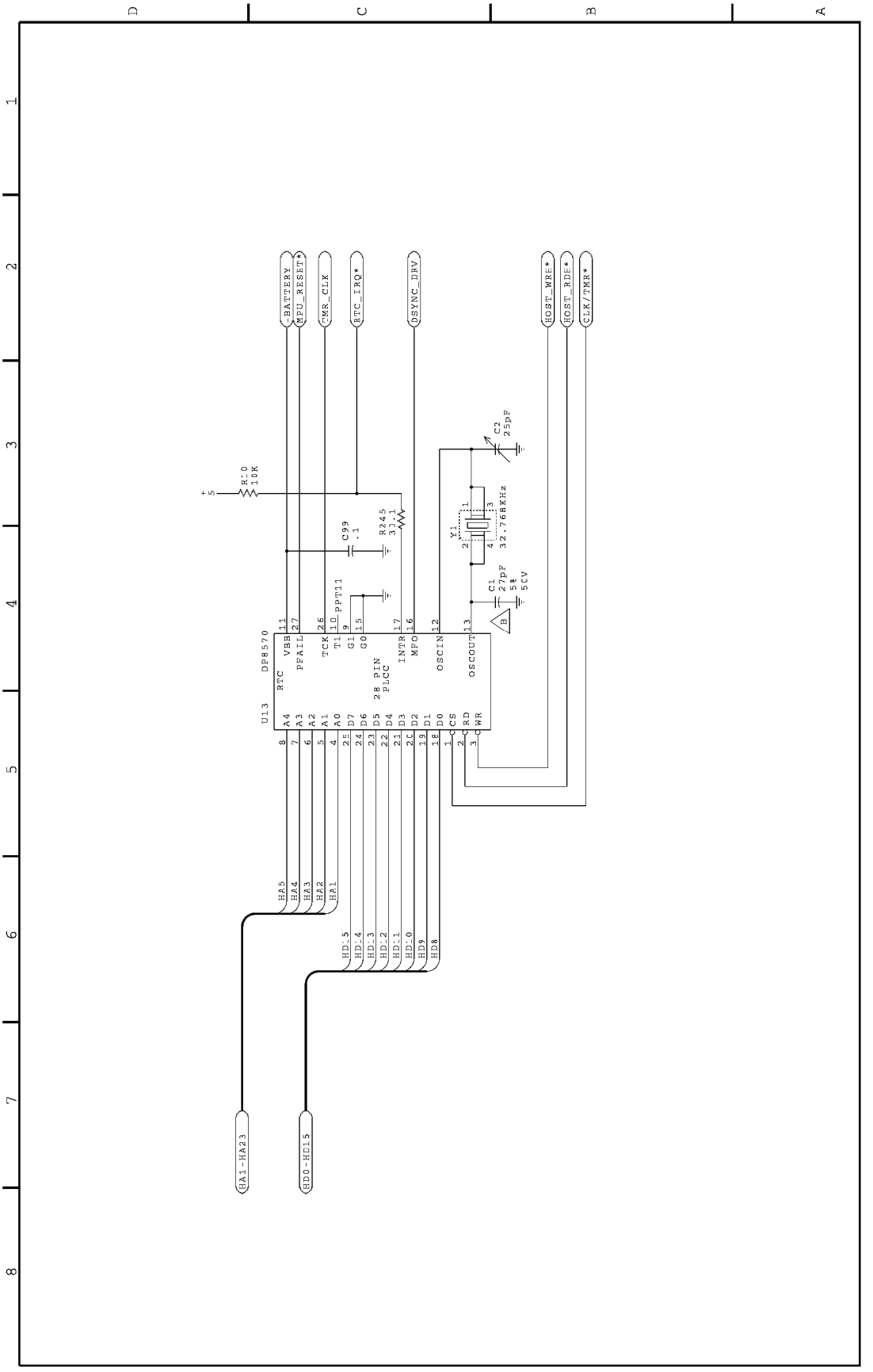
BATTERY
MPU_RESET*
CMR_CLK
RTC_IRQ*
DSYNC_DRV
HOST_WRE*
HOST_RDE*
CLK/TMR*
U13
DP8570
RTC
28 PIN PLCC
VBB
PFAIL
TCK
T1
G1
G0
INTR
MPO
OSCIN
OSCOUT
A4
A3
A2
A1
A0
D7
D6
D5
D4
D3
D2
D1
D0
CS
RD
WR
PPM11
R-0
10K
C99
.1
R245
33.1
C1
27pF
5%
5CV
X1
32.768KHz
C2
25pF
HA5
HA4
HA3
HA2
HA1
HD-5
HD-4
HD-3
HD-2
HD-1
HD-0
HD9
HD8
HA1-HA23
HD0-HD15

3 of 20

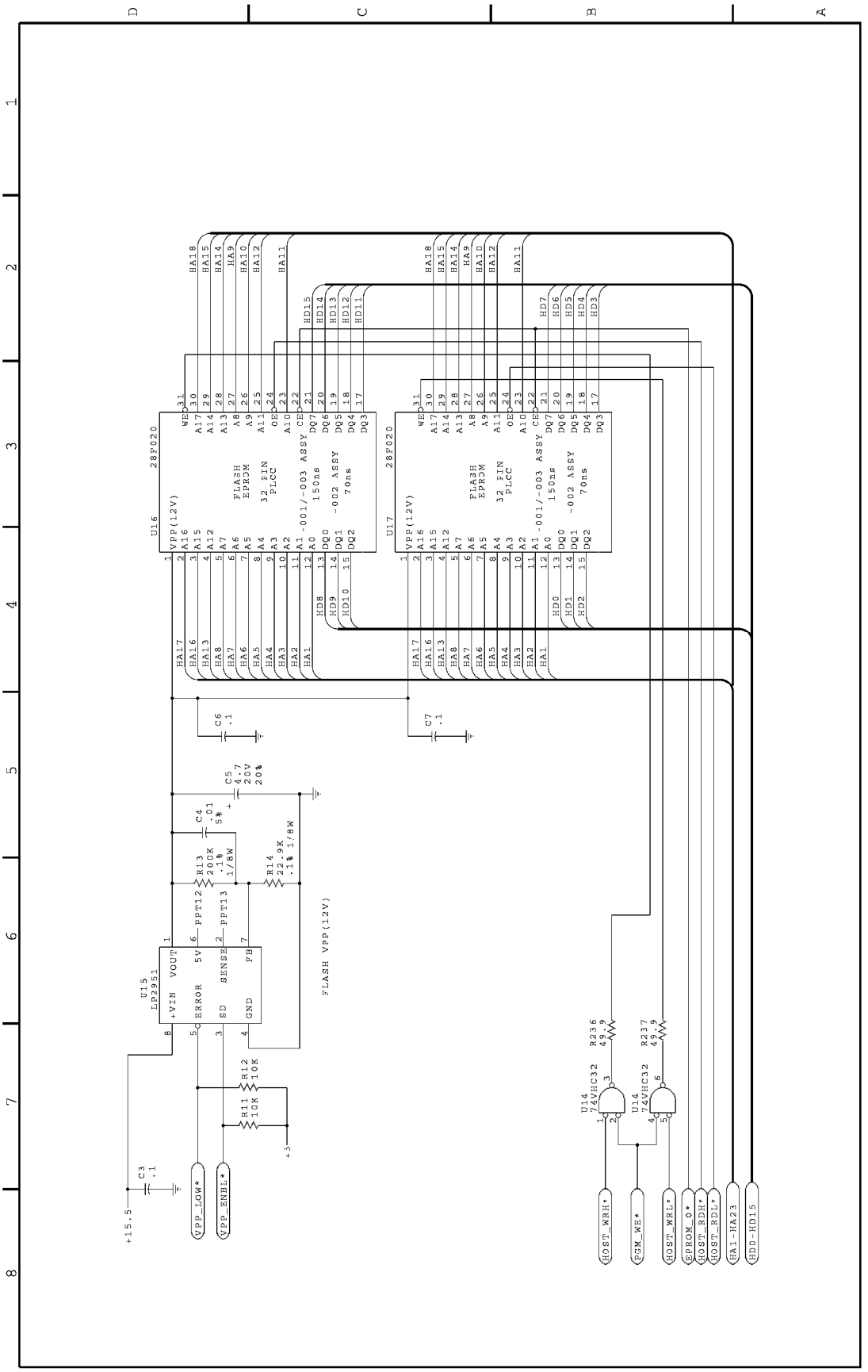
U16
28F020
FLASH EPROM
32 PIN PLCC
-001/-003 ASSY 150ns
-002 ASSY 70ns
U17
28F020
FLASH EPROM
32 PIN PLCC
-001/-003 ASSY 150ns
-002 ASSY 70ns
C6 .1
C7 .1
C5 4.7 20V 20%
C4 .01 5%
R13 200K .1% 1/8W
R14 22.9K .1% 1/8W
U15 LP2951
+VIN VOUT ERROR 5V SD SENSE GND FB
PPT12
PPT13
FLASH VPP(12V)
R12 10K
R11 10K
+5
C3 .1
+15.5
VPP_LOW*
VPP_ENBL*
U14 74VHC32
R236 49.9
R237 49.9
HOST_WRH*
PGM_WE*
HOST_WRL*
EPROM_O*
HOST_RDH*
HOST_RDL*
HA1-HA23
HD0-HD15

4 of 20

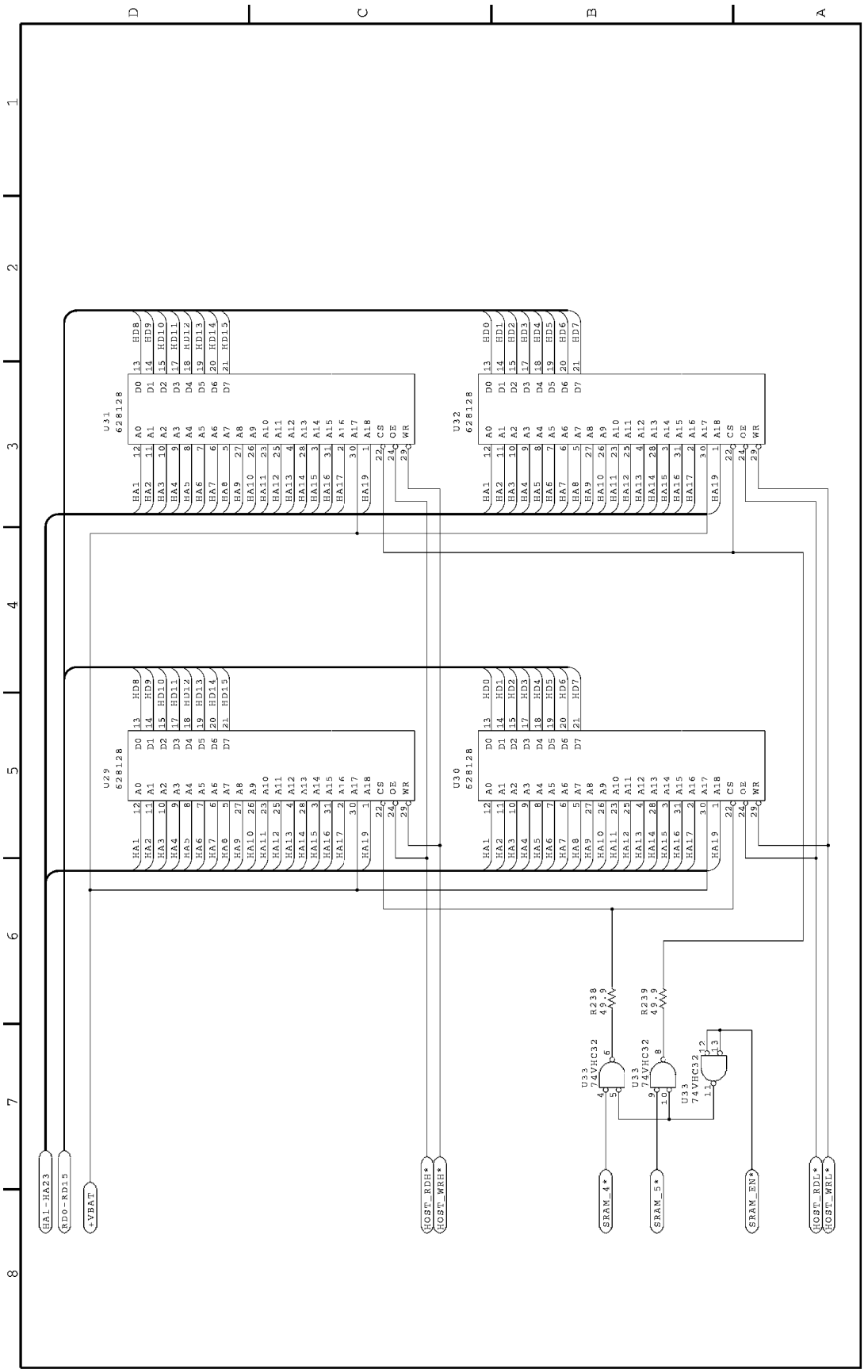
U31
628128
U32
628128
U29
628128
U30
628128
U33
74VHC32
R238
49.9
R239
49.9
HA1-HA23
RD0-RD15
+VBAT
HOST_RDH*
HOST_WRH*
SRAM_4*
SRAM_5*
SRAM_EN*
HOST_RDL*
HOST_WRL*

5 of 20

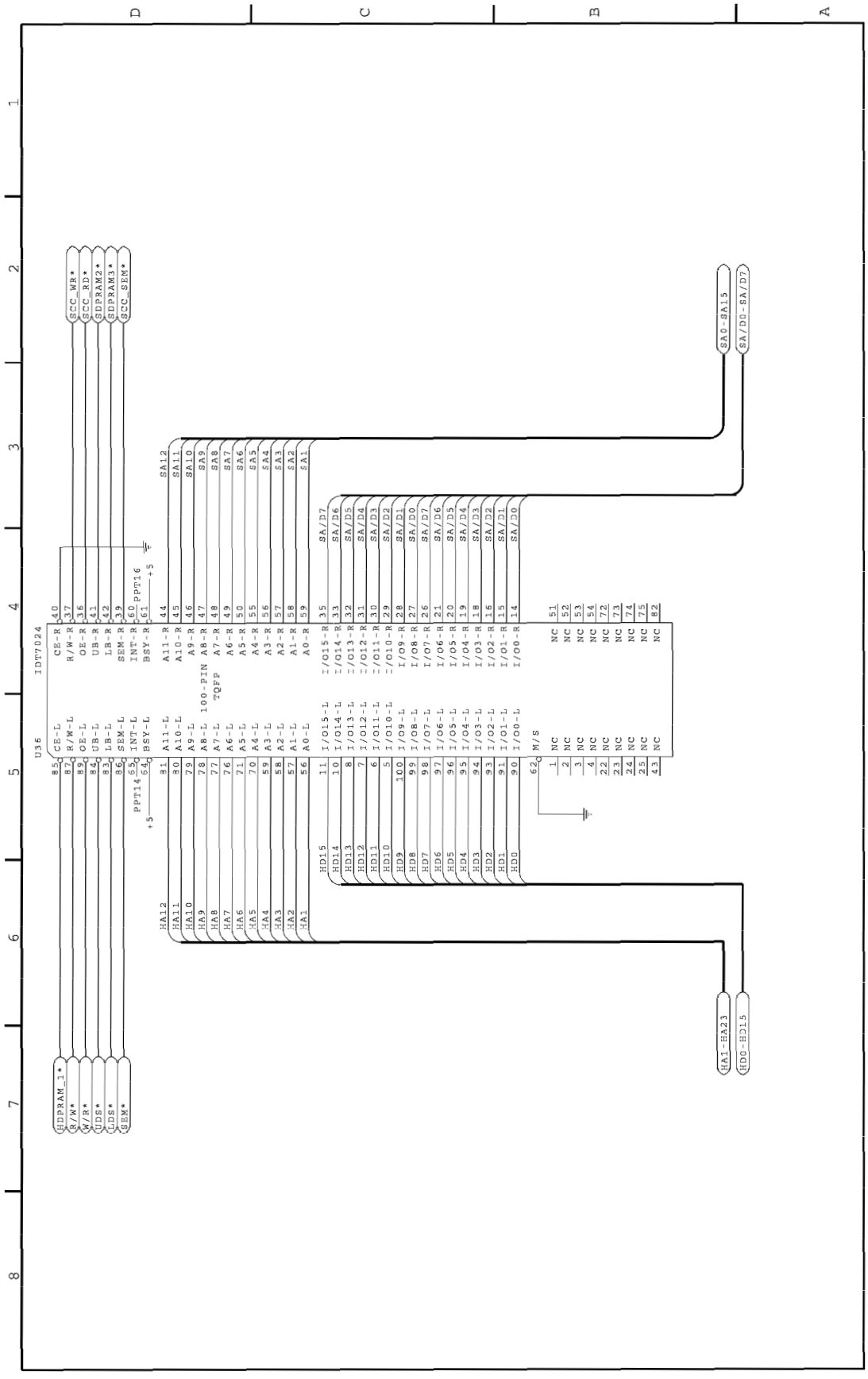
U36
IDT7024
100-PIN TQFP
SCC_WR*
SCC_RD*
SDPRAM2*
SDPRAM3*
SCC_SEM*
SDPRAM_1*
R/W*
WR*
UDS*
LDS*
SEM*
SA0-SA15
SA/D0-SA/D7
HA1-HA23
HD0-HD15
PPT14
PPT16
+5
CE-R
R/W-R
OE-R
UB-R
LB-R
SEM-R
INT-R
BSY-R
A11-R
A10-R
A9-R
A8-R
A7-R
A6-R
A5-R
A4-R
A3-R
A2-R
A1-R
A0-R
I/O15-R
I/O14-R
I/O13-R
I/O12-R
I/O11-R
I/O10-R
I/O9-R
I/O8-R
I/O7-R
I/O6-R
I/O5-R
I/O4-R
I/O3-R
I/O2-R
I/O1-R
I/O0-R
M/S
NC
CE-L
R/W-L
OE-L
UB-L
LB-L
SEM-L
INT-L
BSY-L
A11-L
A10-L
A9-L
A8-L
A7-L
A6-L
A5-L
A4-L
A3-L
A2-L
A1-L
A0-L
I/O15-L
I/O14-L
I/O13-L
I/O12-L
I/O11-L
I/O10-L
I/O9-L
I/O8-L
I/O7-L
I/O6-L
I/O5-L
I/O4-L
I/O3-L
I/O2-L
I/O1-L
I/O0-L
SA12
SA11
SA10
SA9
SA8
SA7
SA6
SA5
SA4
SA3
SA2
SA1
SA/D7
SA/D6
SA/D5
SA/D4
SA/D3
SA/D2
SA/D1
SA/D0
HA12
HA11
HA10
HA9
HA8
HA7
HA6
HA5
HA4
HA3
HA2
HA1
HD15
HD14
HD13
HD12
HD11
HD10
HD9
HD8
HD7
HD6
HD5
HD4
HD3
HD2
HD1
HD0

6 of 20

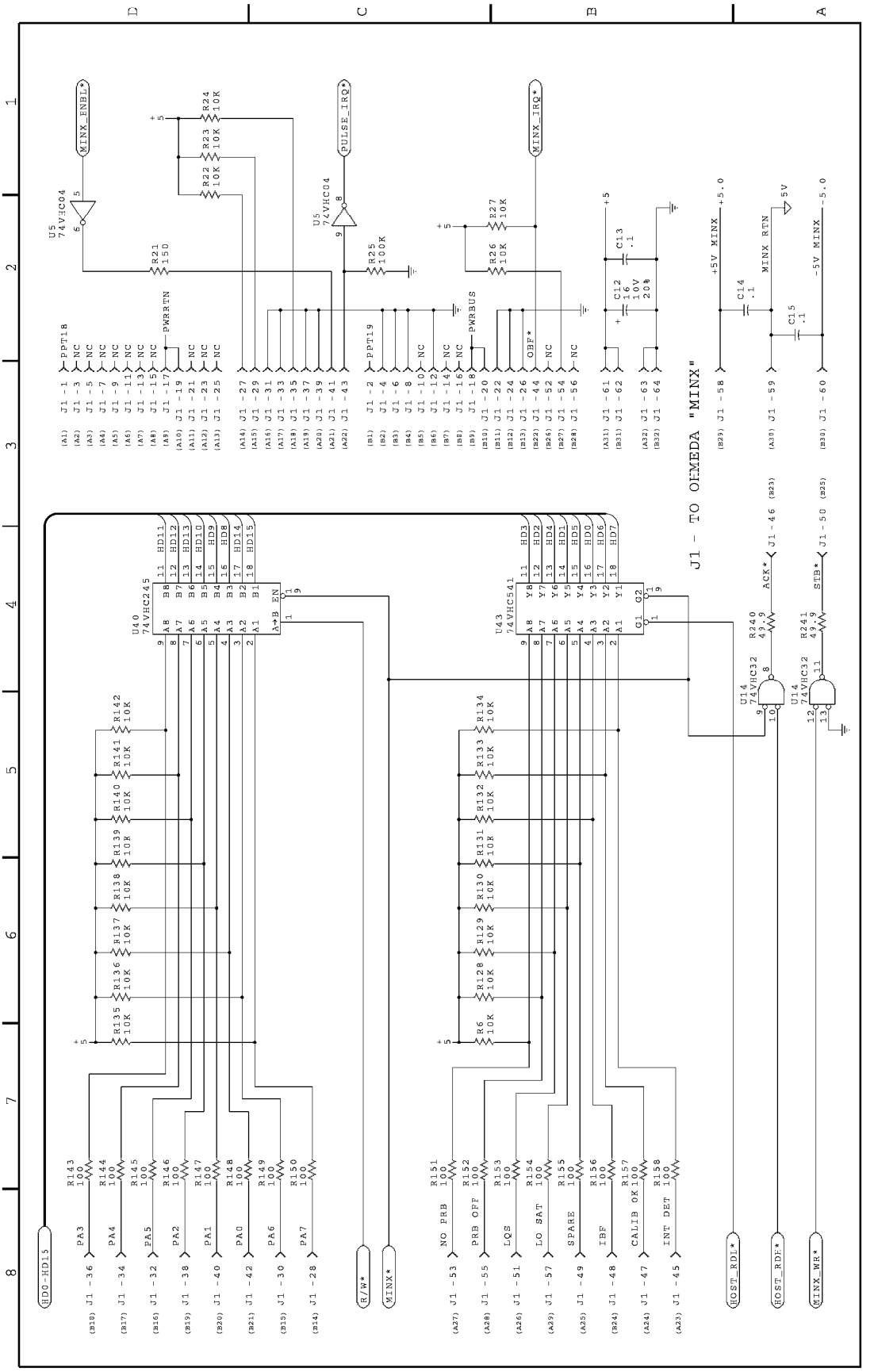
MINX_ENBL*
U5 74VHC04
R21 150
PWRRTN
R22 10K
R23 10K
R24 10K
PULSE_IRQ*
U5 74VHC04
R25 100K
MINX_IRQ*
R26 10K
R27 10K
PWRBUS
OBF*
C12 16 10V 20%
C13 .1
+5V MINX
+5.0
C14 .1
MINX RTN
5V
C15 .1
-5V MINX
-5.0
PPT18
PPT19
J1 - TO OIMEDA "MINX"
U40 74VHC245
U43 74VHC541
R135 10K
R136 10K
R137 10K
R138 10K
R139 10K
R140 10K
R141 10K
R142 10K
R6 10K
R128 10K
R129 10K
R130 10K
R131 10K
R132 10K
R133 10K
R134 10K
R240 49.9
R241 49.9
U14 74VHC32
ACK*
STB*
HD0-HD15
PA3
PA4
PA5
PA2
PA1
PA0
PA6
PA7
R/W*
MINX*
NO PRB
PRB OFF
LQS
LO BAT
SPARE
IBF
CALIB OK
INT DET
HOST_RDL*
HOST_RDH*
MINX_WR*

7 of 20

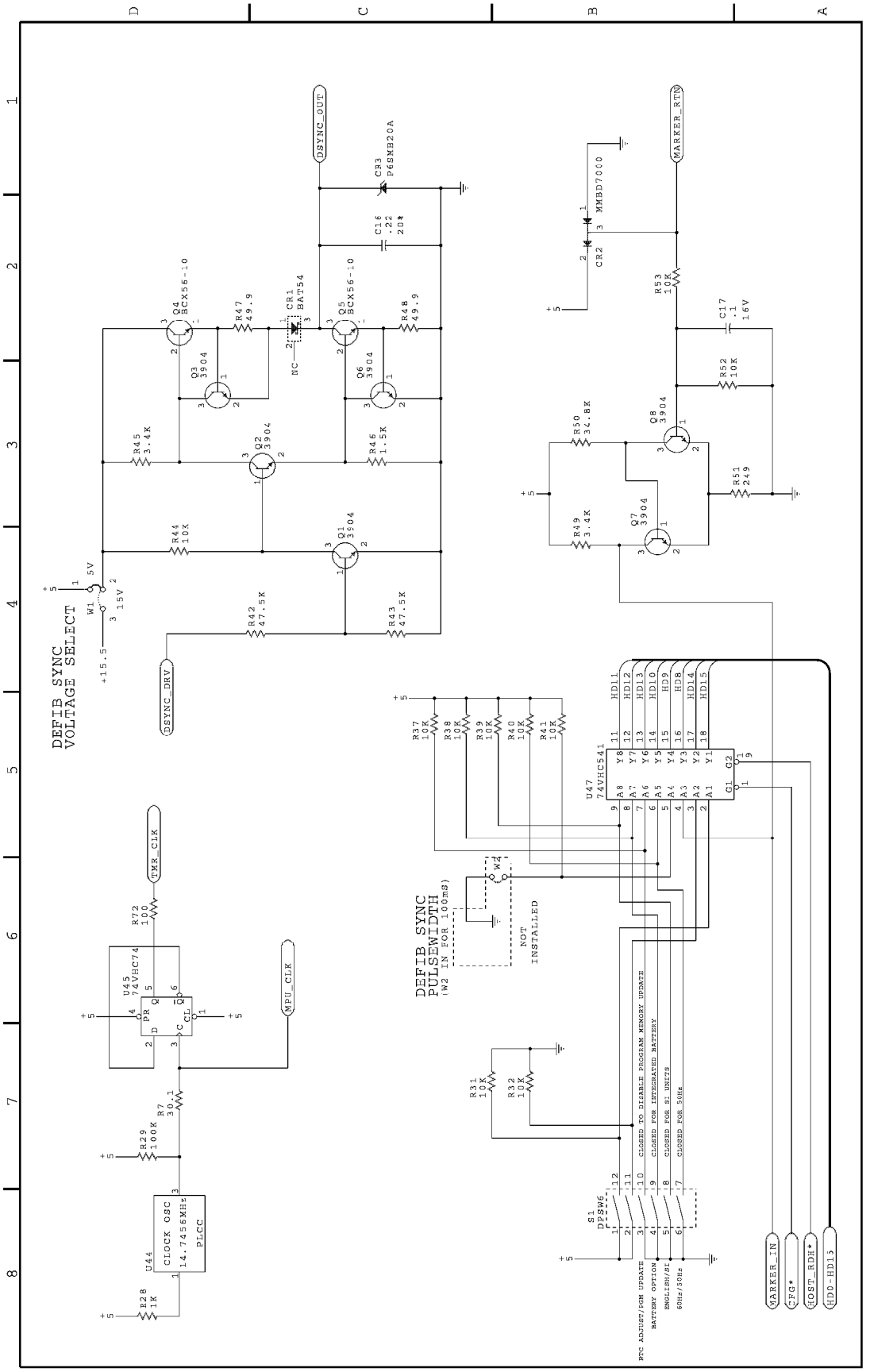
DEFIB SYNC
VOLTAGE SELECT
DEFIB SYNC
PULSEWIDTH
(W2 IN FOR 100ms)
NOT
INSTALLED
CLOCK OSC
14.7456MHz
PLCC
U44
U45
74VHC74
U47
74VHC541
S1
DIPSW6
PFC ADJUST/PGM UPDATE
BATTERY OPTION
ENGLISH/SI
60Hz/50Hz
CLOSED TO DISABLE PROGRAM MEMORY UPDATE
CLOSED FOR INTEGRATED BATTERY
CLOSED FOR SI UNITS
CLOSED FOR 50Hz
DSYNC_OUT
DSYNC_DRV
MARKER_RTN
TMR_CLK
MPU_CLK
MARKER_IN
CFG*
HOST_RDH*
HD0-HD15

8 of 20

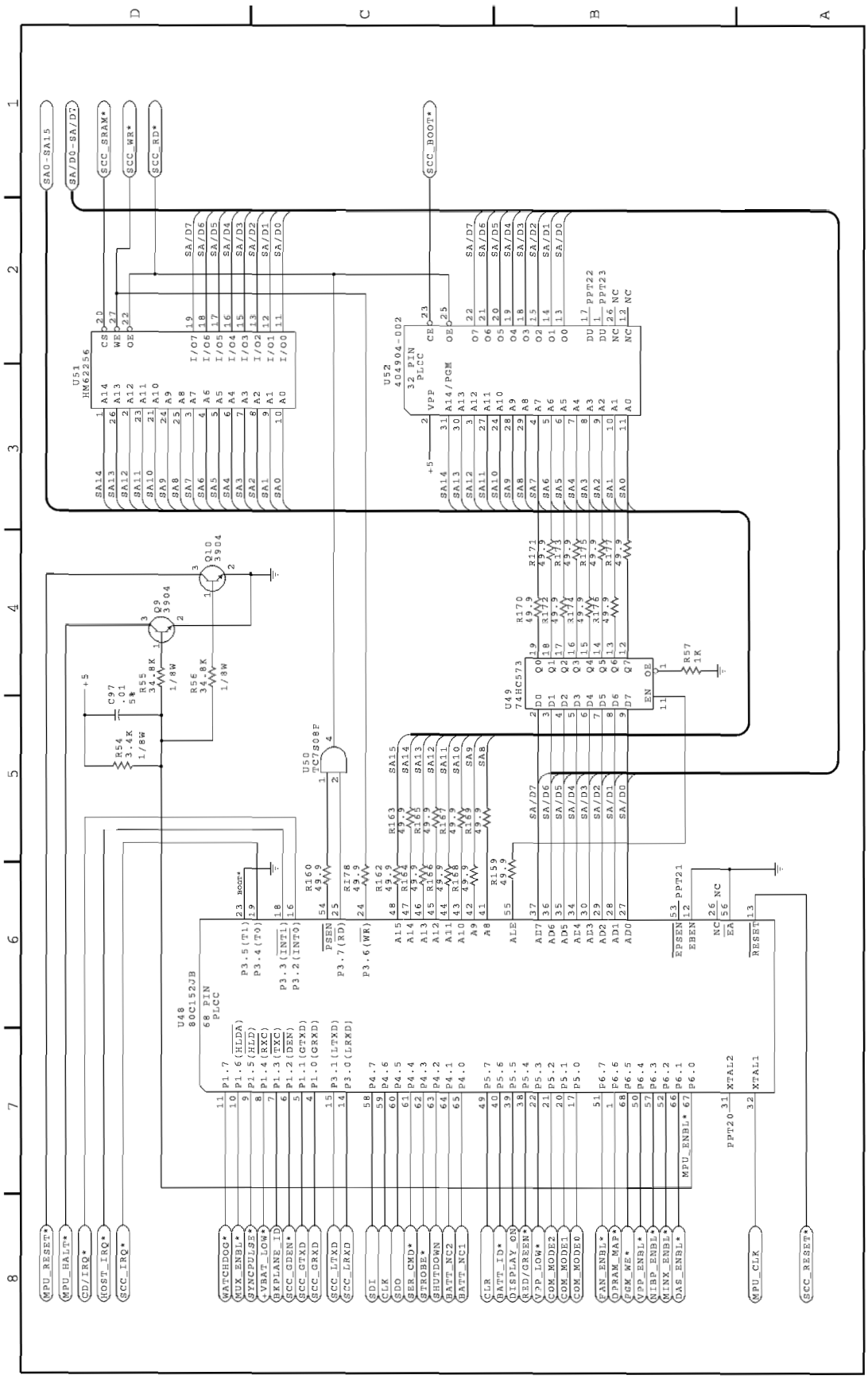
U51
HM62256
U52
404904-002
32 PIN
PLCC
U48
80C152JB
68 PIN
PLCC
U49
74HC573
U50
TC7S08F
Q9
3904
Q10
3904
R54
3.4K
1/8W
R55
34.8K
1/8W
R56
34.8K
1/8W
C97
.01
5%
R57
1K
SA0-SA15
SA/D0-SA/D7
SCC_SRAM*
SCC_WR*
SCC_RD*
SCC_BOOT*
MPU_RESET*
MPU_HALT*
CD/IRQ*
HOST_IRQ*
SCC_IRQ*
WATCHDOG*
MUX_ENBL*
SYNCPULSE*
+VBAT_LOW*
BKPLANE_ID
SCC_GDEN*
SCC_GTXD
SCC_GRXD
SCC_LTXD
SCC_LRXD
SDI
CLK
SDO
SER_CMD*
STROBE*
SHUTDOWN
BATT_NC2
BATT_NC1
CLR
BATT_ID*
DISPLAY_ON
RED/GREEN*
VPP_LOW*
COM_MODE2
COM_MODE1
COM_MODE0
FAN_ENBL*
DRAM_MAP*
PGM_WE*
VPP_ENBL*
NLBP_ENBL*
MINX_ENBL*
DAS_ENBL*
MPU_CLK
SCC_RESET*
MPU_ENBL*
XTAL2
XTAL1
PPT20
PPT21
PPT22
PPT23

9 of 20

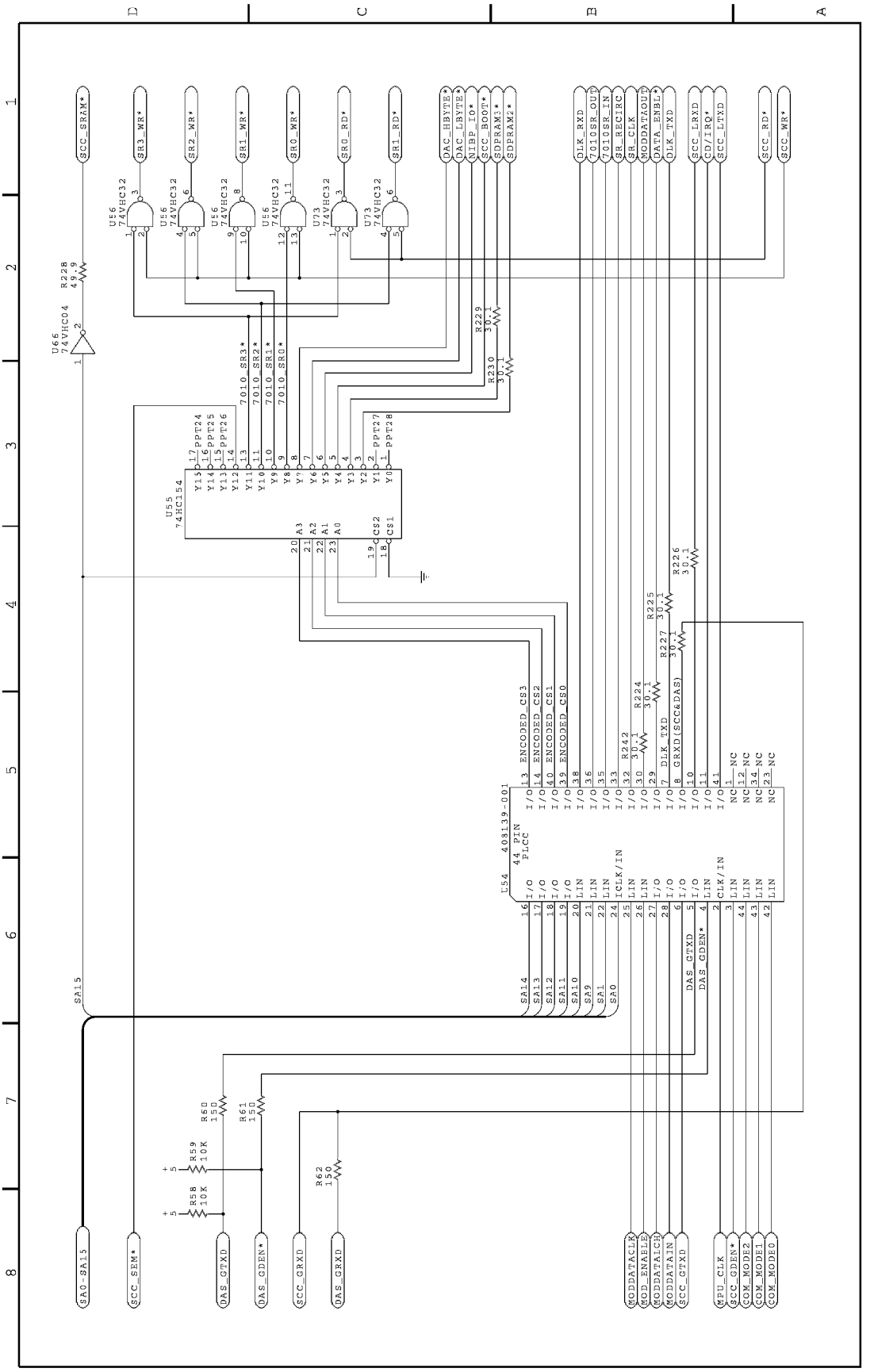
U56 74VHC32
U73 74VHC32
U66 74VHC04
U55 74HC154
U54 409139-001 44 PIN PLCC
R228 499
R229 30.1
R230 30.1
R226 30.1
R225 30.1
R227 30.1
R224 30.1
R242 30.1
R58 10K
R59 10K
R60 150
R61 150
R62 150
SCC_SRAM*
SR3_WR*
SR2_WR*
SR1_WR*
SR0_WR*
SR0_RD*
SR1_RD*
DAC_HBYTE*
DAC_LBYTE*
NIBP_IO*
SCC_BOOT*
SDPRAM3*
SDPRAM2*
DLK_RXD
7010SR_OUT
7010SR_IN
SR_RECIRC
SR_CLK
MODDATAOUT
DATA_ENBL*
DLK_TXD
SCC_LRXD
CD/IRQ*
SCC_LTXD
SCC_RD*
SCC_WR*
7010_SR3*
7010_SR2*
7010_SR1*
7010_SR0*
PPT24
PPT25
PPT26
PPT27
PPT28
ENCODED_CS3
ENCODED_CS2
ENCODED_CS1
ENCODED_CS0
DLK_TXD
GRXD(SCC&DAS)
DAS_GTXD
DAS_GDEN*
SA15
SA0-SA15
SCC_SEM*
DAS_GTXD
DAS_GDEN*
SCC_GRXD
DAS_GRXD
MODDATACLK
MOD_ENABLE
MODDATALCH
MODDATAIN
SCC_GTXD
MPU_CLK
SCC_GDEN*
COM_MODE2
COM_MODE1
COM_MODE0

10 of 20

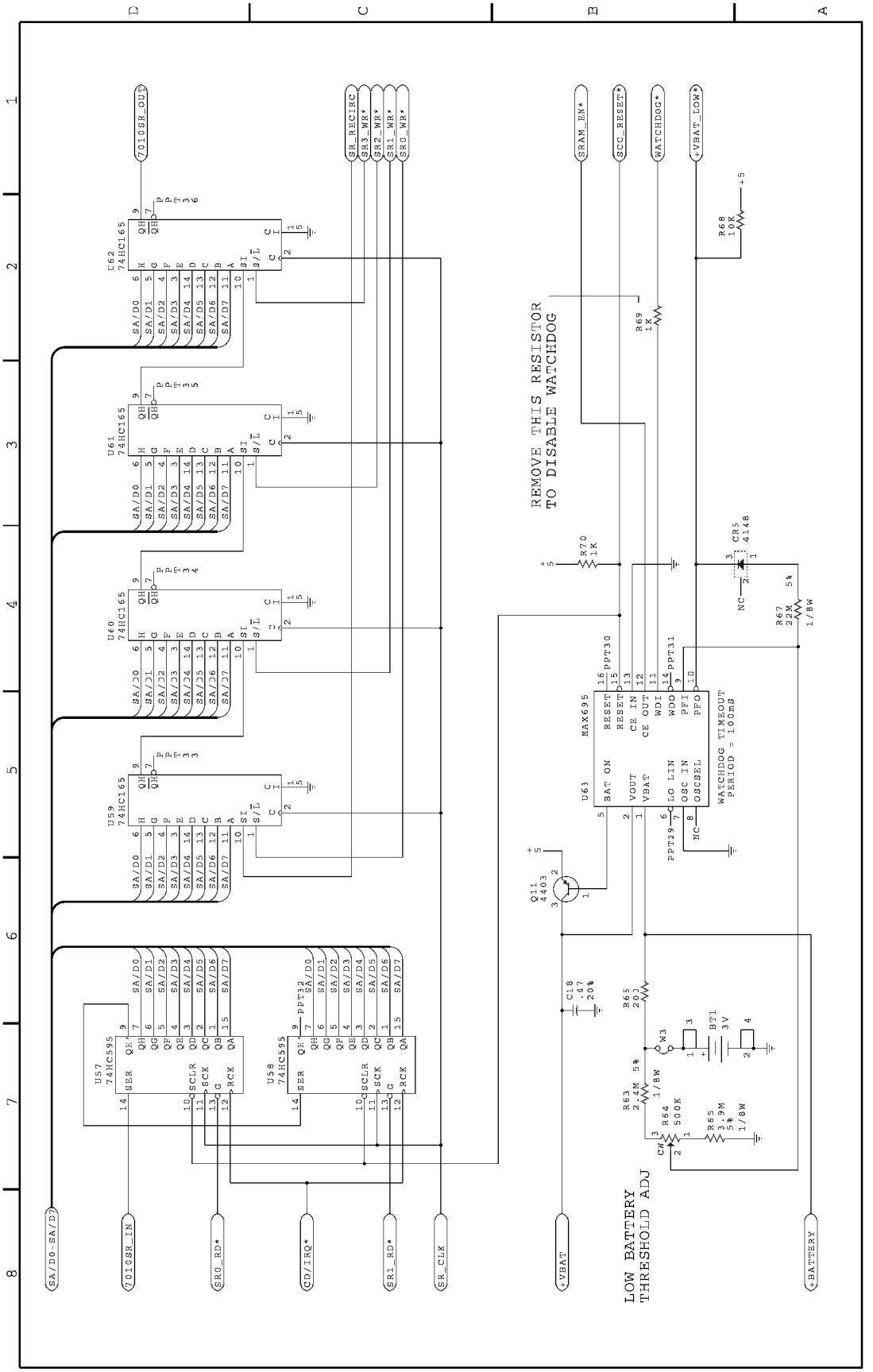
REMOVE THIS RESISTOR
TO DISABLE WATCHDOG
LOW BATTERY
THRESHOLD ADJ
WATCHDOG TIMEOUT
PERIOD = 100mS
U62
74HC165
U61
74HC165
U60
74HC165
U59
74HC165
U57
74HC595
U58
74HC595
U63
MAX695
Q11
4403
R68
10K
R69
1K
R70
1K
CR5
4148
R67
22M
5%
1/8W
R65
20J
R63
2.4M
5%
1/8W
R64
500K
R55
3.9M
5%
1/8W
C18
.47
20%
BT1
3V
W3
7010SR_OUT
SR_RECIRC
SR3_WR*
SR2_WR*
SR1_WR*
SR0_WR*
SRAM_EN*
SCC_RESET*
WATCHDOG*
+VBAT_LOW
SA/D0-SA/D7
7010SR_IN
SR0_RD*
CD/IRQ*
SR1_RD*
SR_CLK
+VBAT
+BATTERY

11 of 20

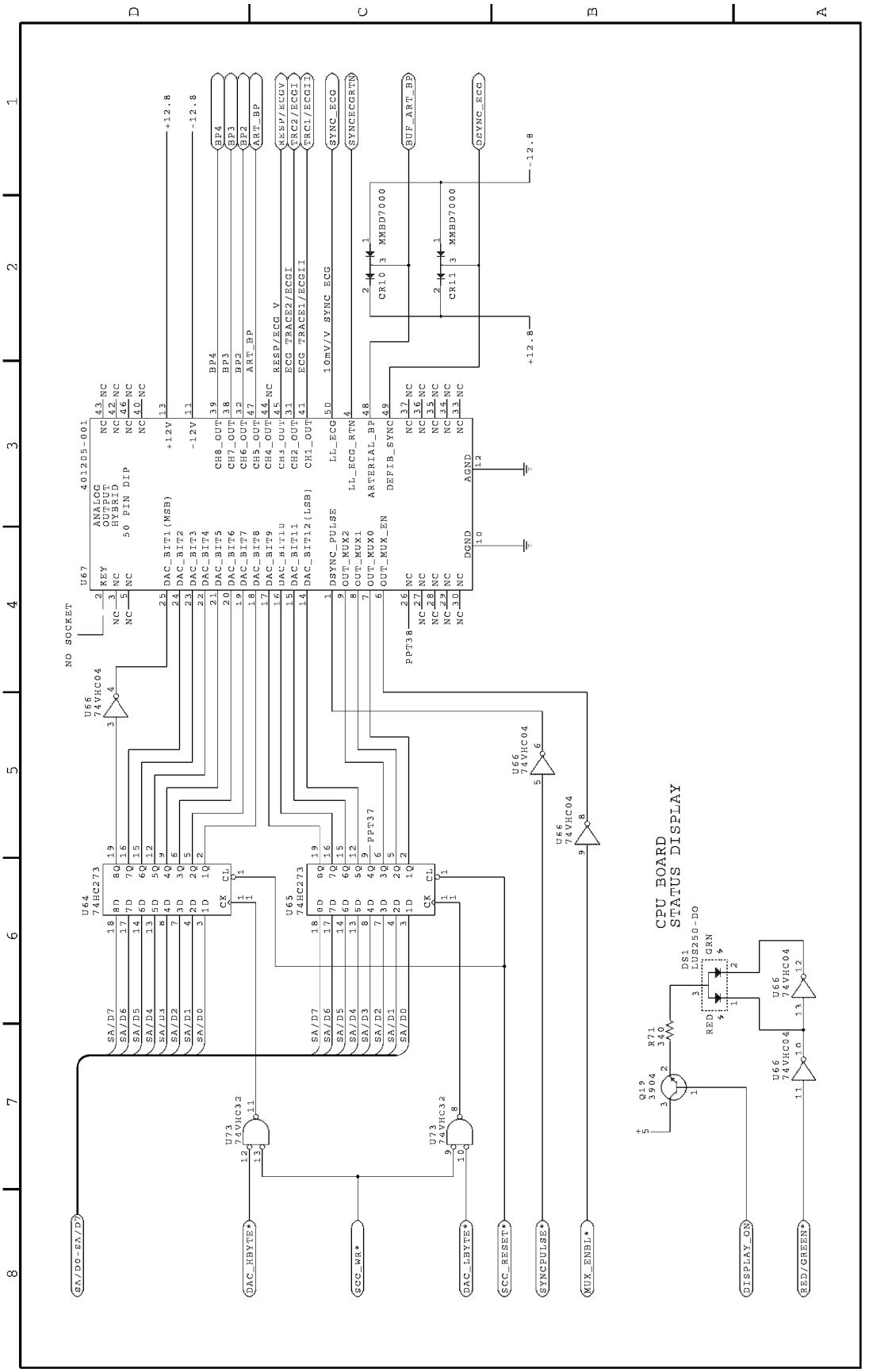
U67
401205-001
ANALOG OUTPUT HYBRID
50 PIN DIP
NO SOCKET
U64
74HC273
U65
74HC273
U66
74VHC04
U73
74VHC32
Q19
3904
R71
340
DS1
LUS250-DO
CPU BOARD
STATUS DISPLAY
CR10
MMBD7000
CR11
MMBD7000
SA/D0-SA/D7
DAC_HBYTE*
SCC_WR*
DAC_LBYTE*
SCC_RESET*
SYNCPULSE*
MUX_ENBL*
DISPLAY_ON
RED/GREEN*
SYNC_ECG
DSYNC_ECG
BUF_ART_BP
SYNCECGRTN
+12.8
-12.8
+12V
-12V

12 of 20

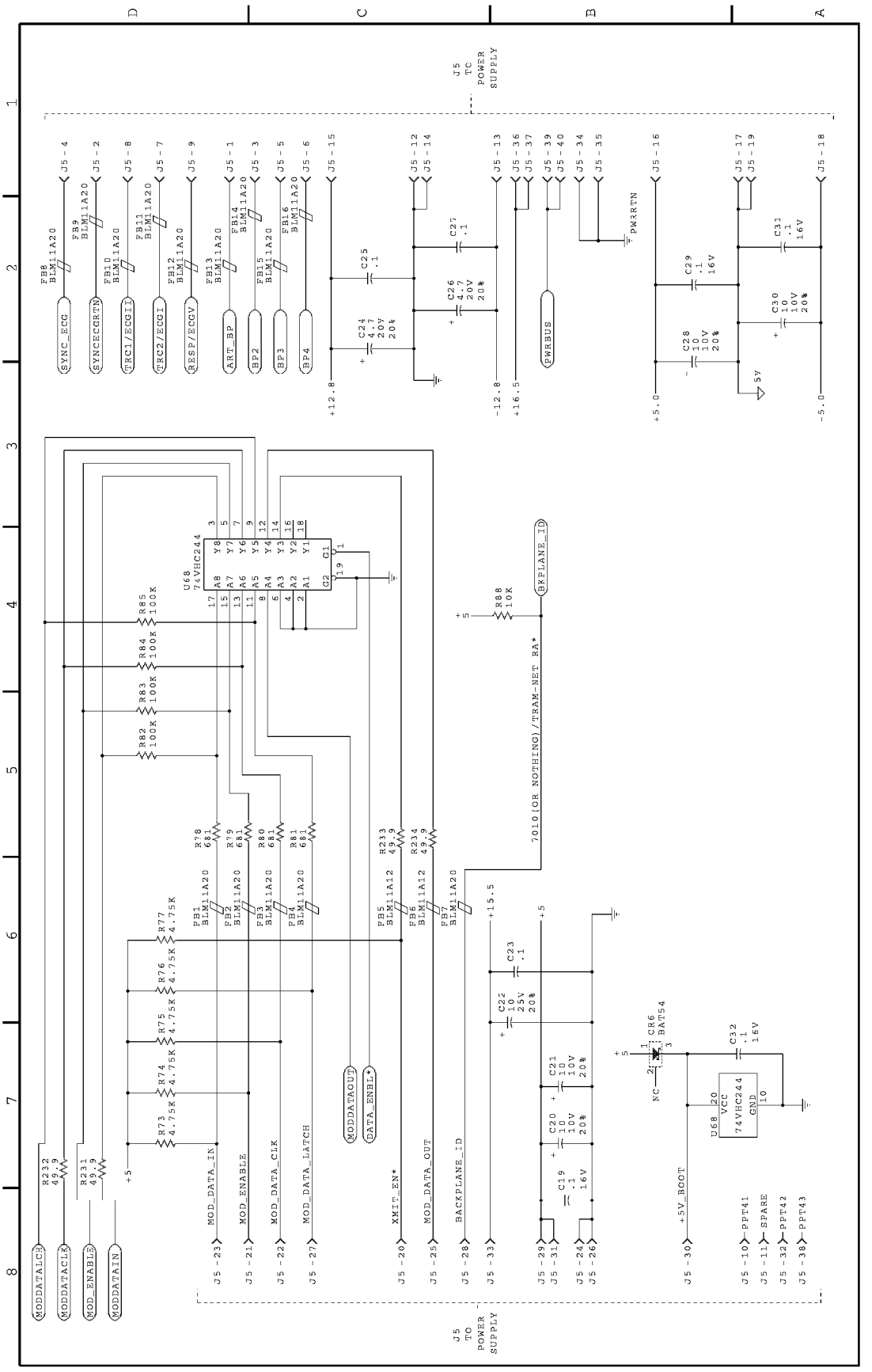
J5 TO POWER SUPPLY
J5 TO POWER SUPPLY
SYNC_ECG
SYNCECGRTN
PRC1/ECGI1
PRC2/ECGI
RESP/ECGV
ART_BP
BP2
BP3
BP4
PWRBUS
PWRRTN
BPLANE_ID
MODDATAIN
MOD_ENABLE
MODDATACLK
MODDATALCH
MOD_DATA_IN
MOD_ENABLE
MOD_DATA_CLK
MOD_DATA_LATCH
XMIT_EN*
MODDATAOUT
DATA_ENBI*
MOD_DATA_OUT
BACKPLANE_ID
+5V_BOOT
PPT41
SPARE
PPT42
PPT43
U68 74VHC244
U68 74VHC244
7010(OR NOTHING)/TRAM-NET RA*

13 of 20

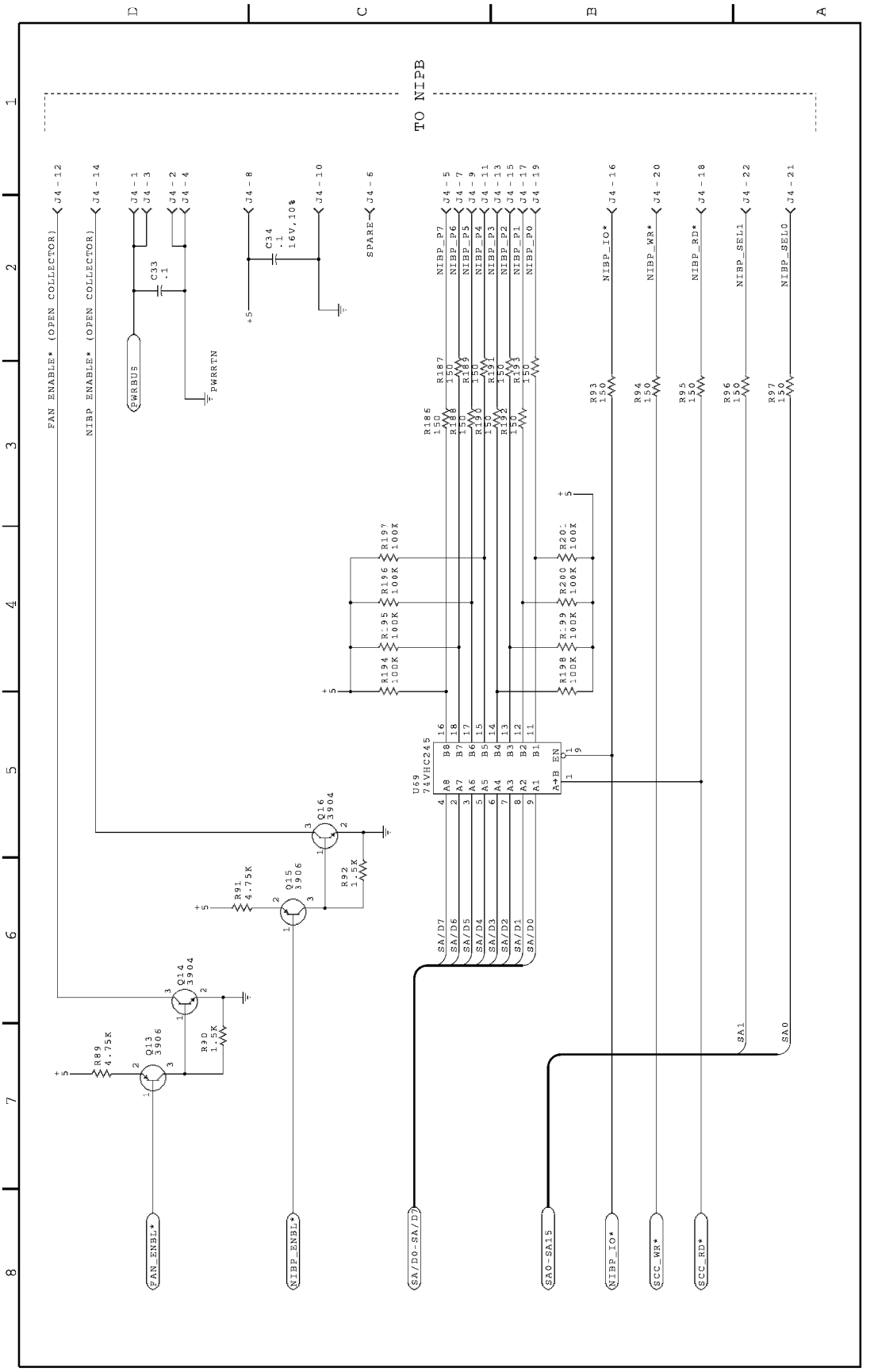
TO NIPB
FAN ENABLE* (OPEN COLLECTOR)
NIBP ENABLE* (OPEN COLLECTOR)
PWRBUS
PWRRTN
SPARE
NIBP_P7
NIBP_P6
NIBP_P5
NIBP_P4
NIBP_P3
NIBP_P2
NIBP_P1
NIBP_P0
NIBP_IO*
NIBP_WR*
NIBP_RD*
NIBP_SEL1
NIBP_SEL0
U69
74VHC245
A+B
EN
SA/D7
SA/D6
SA/D5
SA/D4
SA/D3
SA/D2
SA/D1
SA/D0
SA1
SA0
FAN_ENBL*
NIBP_ENBL*
SA/D0-SA/D7
SA0-SA15
NIBP_IO*
SCC_WR*
SCC_RD*

14 of 20

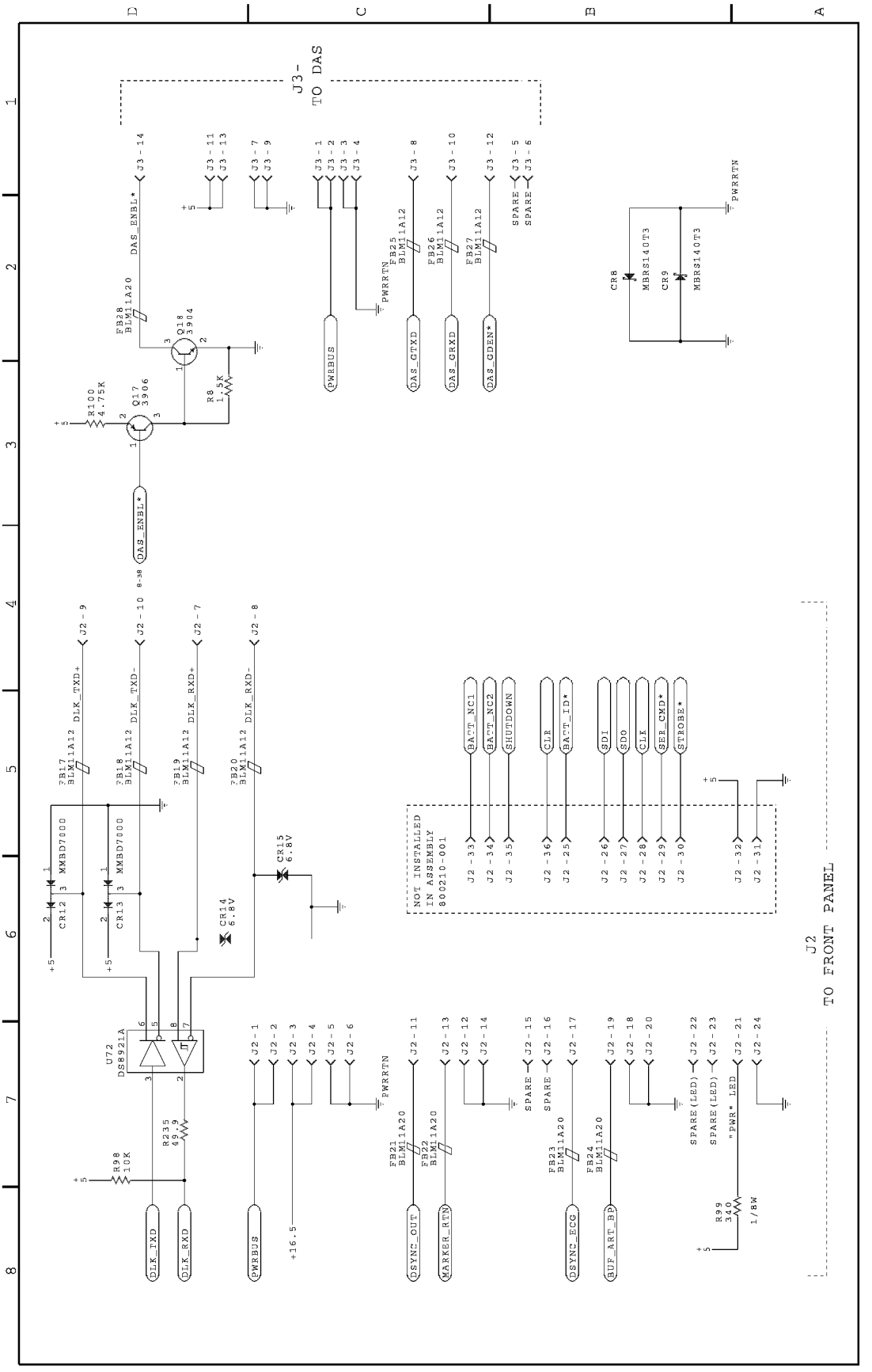
J3-
TO DAS
J2
TO FRONT PANEL
NOT INSTALLED
IN ASSEMBLY
800210-001
DAS_ENBL*
DAS_GTXD
DAS_GRXD
DAS_GDEN*
PWRBUS
PWRRTN
SPARE
SPARE
CR8
CR9
MBRS140T3
MBRS140T3
Q18
3904
Q17
3906
R100
4.75K
R8
1.5K
FB28
BLM11A20
FB25
BLM11A12
FB26
BLM11A12
FB27
BLM11A12
DLK_TXD+
DLK_TXD-
DLK_RXD+
DLK_RXD-
FB17
BLM11A12
FB18
BLM11A12
FB19
BLM11A12
FB20
BLM11A12
CR12
CR13
MMBD7000
MMBD7000
CR14
6.8V
CR15
6.8V
U72
DS8921A
R98
10K
R235
49.9
DLK_TXD
DLK_RXD
+16.5
BATT_NC1
BATT_NC2
SHUTDOWN
CLR
BATT_ID*
SDI
SDO
CLK
SER_CMD*
STROBE*
FB21
BLM11A20
FB22
BLM11A20
FB23
BLM11A20
FB24
BLM11A20
SYNC_OUT
MARKER_RTN
SYNC_ECG
BUF_ART_BP
SPARE(LED)
SPARE(LED)
"PWR" LED
R99
340
1/8W

15 of 20

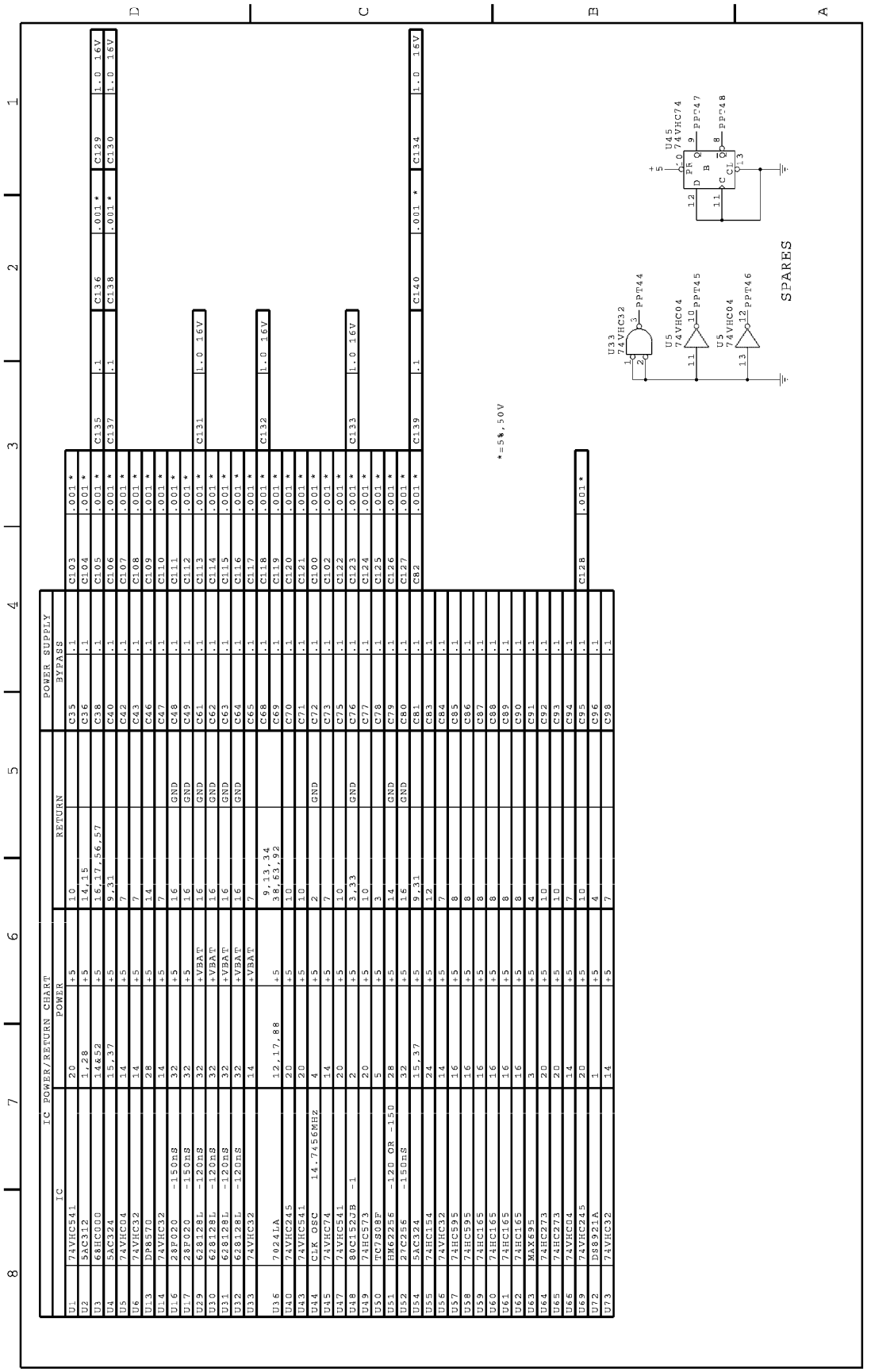
IC POWER/RETURN CHART
IC
POWER
RETURN
POWER SUPPLY
BYPASS
U1 74VHC541 20 +5 10 C35 .1 C103 .001 *
U2 5AC312 1,28 +5 14,15 C36 .1 C104 .001 *
U3 68HC000 14&32 +5 16,17,56,57 C38 .1 C105 .001 * C135 .1 C136 .001 * C129 1.0 16V
U4 5AC324 15,37 +5 9,31 C40 .1 C106 .001 * C137 .1 C138 .001 * C130 1.0 16V
U5 74VHC04 14 +5 7 C42 .1 C107 .001 *
U6 74VHC32 14 +5 7 C43 .1 C108 .001 *
U13 DP8570 28 +5 14 C46 .1 C109 .001 *
U14 74VHC32 14 +5 7 C47 .1 C110 .001 *
U16 28F020 -150nS 32 +5 16 GND C48 .1 C111 .001 *
U17 28F020 -150nS 32 +5 16 GND C49 .1 C112 .001 *
U29 62818L -120nS 32 +VBAT 16 GND C61 .1 C113 .001 * C131 1.0 16V
U30 62818L -120nS 32 +VBAT 16 GND C62 .1 C114 .001 *
U31 62818L -120nS 32 +VBAT 16 GND C63 .1 C115 .001 *
U32 62818L -120nS 32 +VBAT 16 GND C64 .1 C116 .001 *
U33 74VHC32 14 +VBAT 7 GND C65 .1 C117 .001 * C132 1.0 16V
U36 7024LA 12,17,88 +5 9,13,34 38,63,92 C68 .1 C118 .001 *
U40 74VHC245 20 +5 10 C69 .1 C119 .001 *
U43 74VHC541 20 +5 10 C70 .1 C120 .001 *
U44 CLK OSC 14.7456MHz 4 +5 2 GND C71 .1 C121 .001 *
U45 74VHC74 14 +5 7 C72 .1 C100 .001 *
U47 74VHC541 20 +5 10 C73 .1 C102 .001 *
U48 80C152JB -1 20 +5 3,33 C75 .1 C122 .001 *
U49 74HC573 20 +5 10 GND C76 .1 C123 .001 * C133 1.0 16V
U50 TC7808F 5 +5 3 C77 .1 C124 .001 *
U51 BM62256 -120 OR -150 28 +5 14 C78 .1 C125 .001 *
U52 27C256 -150nS 32 +5 16 GND C79 .1 C126 .001 *
U54 5AC324 15,37 +5 9,31 C80 .1 C127 .001 *
U55 74HC154 24 +5 12 GND C81 .1 C82 .001 * C139 .1 C140 .001 * C134 1.0 16V
U56 74VHC32 14 +5 7 C83 .1
U57 74HC595 16 +5 8 C84 .1
U58 74HC595 16 +5 8 C85 .1
U59 74HC165 16 +5 8 C86 .1
U60 74HC165 16 +5 8 C87 .1
U61 74HC165 16 +5 8 C88 .1
U62 74HC165 16 +5 8 C89 .1
U63 MAX695 3 +5 4 C90 .1
U64 74HC273 20 +5 10 C91 .1
U65 74HC273 20 +5 10 C92 .1
U66 74VHC04 14 +5 7 C93 .1
U69 74VHC245 20 +5 10 C94 .1
U72 DS8921A 1 +5 4 C95 .1 C128 .001 *
U73 74VHC32 14 +5 7 C96 .1
C98 .1
*=5%,50V
U33 74VHC32 PPM44
U5 74VHC04 PPM45
U5 74VHC04 PPM46
U45 74VHC74 PPM47 PPM48
SPARES

LABEL	PAGE COORDINATES
+12.8:	11-B3,D1 12-C3
+15.5:	3-D8 7-D4 12-C6
+16.5:	12-B3 14-C8
+5.0:	6-B2 12-B3
+BATTERY:	2-C2 10-A8
+VBAT:	4-D8 10-B8
+VBAT_LOW*:	8-C8 10-B1
-12.8:	11-B1,D1 12-B3
-5.0:	6-A2 12-A3
7010SR_IN:	9-B1 10-D8
7010SR_OUT:	9-B1 10-D1
ART_BP:	11-C1 12-D3
AS*:	1-B3,B6,C3
BATT_ID*:	8-B8 14-B5
BATT_NC1:	8-C8 14-C5
BATT_NC2:	8-C8 14-C5
BERR*:	1-C3,C6
BKPLANE_ID:	8-C8 12-B4
BP2:	11-D1 12-C3
BP3:	11-D1 12-C3
BP4:	11-D1 12-C3
BUF_ART_BP:	11-C1 14-B8
CD/IRQ*:	8-D8 9-B1 10-C8
CFG*:	1-D1 7-A8

LABEL	PAGE COORDINATES
CLK:	8-C8 14-B5
CLK/TMR*:	1-C1 2-B2
CLR:	8-C8 14-B5
COM_MODE0:	8-B8 9-A8
COM_MODE1:	8-B8 9-A8
COM_MODE2:	8-B8 9-A8
DAC_HBYTE*:	9-C1 11-D8
DAC_LBYTE*:	9-C1 11-C8
DAS_ENBL*:	8-B8 14-D4
DAS_GDEN*:	9-C8 14-C3
DAS_GRXD:	9-C8 14-C3
DAS_GTXD:	9-D8 14-C3
DATA_ENBL*:	9-B1 12-C7
DISPLAY_ON:	8-B8 11-A8
DLK_RXD:	9-B1 14-D8
DLK_TXD:	9-B1 14-D8
DPRAM_MAP*:	1-C1 8-B8
DSYNC_DRV:	2-C2 7-D5
DSYNC_ECG:	11-C1 14-B8
DSYNC_OUT:	7-C1 14-C8
DTACK*:	1-C3,C6
EPROM_0*:	1-C1 3-B8
FAN_ENBL*:	8-B8 13-D8
FC0:	1-A6,B6
FC1:	1-A6,B6
FC2:	1-A6,B6

LABEL	PAGE COORDINATES
HA1:	1-B6,C4,C7 2-C6 3-B4,C4 4-C3,C5,D3,D5 5-C6
HA2:	1-B6,C4,C7 2-C6 3-B4,C4 4-B3,B5,D3,D5 5-C6
HA3:	1-B6,C4,C7 2-C6 3-B4,C4 4-B3,B5,D3,D5 5-C6
HA4:	1-C4 2-C6 3-B4,C4 4-B3,B5,D3,D5 5-C6
HA5:	1-C4 2-C6 3-C4 4-B3,B5,D3,D5 5-D6
HA6:	1-C4 3-C4,D4 4-B3,B5,D3,D5 5-D6
HA7:	1-C4 3-C4,D4 4-B3,B5,D3,D5 5-D6
HA8:	1-C4 3-C4,D4 4-B3,B5,D3,D5 5-D6
HA9:	1-C4 3-C2,D2 4-B3,B5,D3,D5 5-D6
HA10:	1-C4 3-C2,D2 4-B3,B5,D3,D5 5-D6
HA11:	1-C4 3-B2,C2 4-B3,B5,C3,C5 5-D6
HA12:	1-C4 3-C2 4-B3,B5,C3,C5 5-D6

LABEL	PAGE COORDINATES
HA13:	1-C4 3-C4,D4 4-B3,B5,C3,C5
HA14:	1-C4 3-C2,D2 4-B3,B5,C3,C5
HA15:	1-C4 3-C2,D2 4-B3,B5,C3,C5
HA16:	1-C4 3-C4,D4 4-B3,B5,C3,C5
HA17:	1-D4 3-C4,D4 4-B3,B5,C3,C5
HA18:	1-D4 3-C2,D2
HA19:	1-D4 4-B3,B5,C3,C5
HA20:	1-D4
HA21:	1-D4
HA22:	1-D4
HA23:	1-D4
HA1-HA23:	1-D8 2-D8 3-B8 4-D8 5-B7
HD0:	1-B3,C6 3-B4 4-C2,C5 5-B6 6-B4
HD0-HD15:	1-D8 2-C8 3-A8 5-A7 6-D8 7-A8
HD1:	1-B3,C6 3-B4 4-B2,B5 5-B6 6-B4
HD2:	1-B3,C6 3-B4 4-B2,B5 5-C6 6-B4

LABEL	PAGE COORDINATES
HD3:	1-B3,C6 3-B2 4-B2,B5 5-C6 6-B4
HD4:	1-B3,C6 3-B2 4-B2,B5 5-C6 6-B4
HD5:	1-B3,C6 3-B2 4-B2,B5 5-C6 6-B4
HD6:	1-B3,C6 3-B2 4-B2,B5 5-C6 6-B4
HD7:	1-B3,C6 3-B2 4-B2,B5 5-C6 6-B4
HD8:	1-B3 2-C6 3-C4 4-D2,D5 5-C6 6-D4 7-B4
HD9:	1-B3 2-C6 3-C4 4-D2,D5 5-C6 6-D4 7-B4
HD10:	1-B4 2-C6 3-C4 4-D2,D5 5-C6 6-D4 7-B5
HD11:	1-B4 2-C6 3-C2 4-D2,D5 5-C6 6-D4 7-B5

LABEL	PAGE COORDINATES
HD12:	1-B4 2-C6 3-C2 4-D2,D5 5-C6 6-D4 7-B5
HD13:	1-B4 2-C6 3-C2 4-D2,D5 5-C6 6-D4 7-B5
HD14:	1-C4 2-C6 3-C2 4-D2,D5 5-C6 6-D4 7-B5
HD15:	1-C4 2-C6 3-C2 4-D2,D5 5-C6 6-D4 7-B5
HDPRAM_1*:	1-D1 5-D7
HOST_IRQ*:	1-B1 8-D8
HOST_RDH*:	1-B1 2-B2 3-B8 4-C8 6-A8 7-A8
HOST_RDL*:	1-A1 3-B8 4-A8 6-B8
HOST_WRH*:	1-B1 2-B2 3-B8 4-C8
HOST_WRL*:	1-B1 3-B8 4-A8
IPL0:	1-A3,B6
IPL1:	1-A3,B6
IPL2:	1-A3,B6
LDS*:	1-A1,A3,B3,B6 5-D7

LABEL	PAGE COORDINATES
MARKER_IN:	1-B8 7-A8
MARKER_RTN:	7-B1 14-C8
MINX*:	1-C1 6-C8
MINX_ENBL*:	6-D1 8-B8
MINX_IRQ*:	1-B8 6-B1
MINX_WR*:	1-C1 6-A8
MODDATACLK:	9-B8 12-D8
MODDATAIN:	9-B8 12-D8
MODDATALCH:	9-B8 12-D8
MODDATAOUT:	9-B1 12-C7
MOD_ENABLE:	9-B8 12-D8
MPU_CLK:	1-C8 7-C6 8-A8 9-B8
MPU_HALT*:	1-D8 8-D8
MPU_RESET*:	1-D8 2-C2 8-D8
MUX_ENBL*:	8-D8 11-B8
NIBP_ENBL*:	8-B8 13-C8
NIBP_IO*:	9-C1 13-B8
PGM_WE*:	3-B8 8-B8
PPT1:	1-B5
PPT2:	1-B5
PPT3:	1-B5
PPT5:	1-D2
PPT6:	1-C2
PPT7:	1-C2
PPT8:	1-C2
PPT9:	1-C2
PPT10:	1-C2

LABEL	PAGE COORDINATES
PPT11:	2-C4
PPT12:	3-D6
PPT13:	3-D6
PPT14:	5-D5
PPT16:	5-D4
PPT18:	6-D2
PPT19:	6-C2
PPT20:	8-B7
PPT21:	8-B6
PPT22:	8-B2
PPT23:	8-B2
PPT24:	9-D3
PPT25:	9-D3
PPT26:	9-D3
PPT27:	9-C3
PPT28:	9-C3
PPT29:	10-B6
PPT30:	10-B4
PPT31:	10-B4
PPT32:	10-C6
PPT33:	10-D5
PPT34:	10-D4
PPT35:	10-D3
PPT36:	10-D2
PPT37:	11-C5
PPT38:	11-C4
PPT41:	12-A8
PPT42:	12-A8
PPT43:	12-A8
PPT44:	15-B2
PPT45:	15-B2
PPT46:	15-A2
PPT47:	15-B1
PPT48:	15-B1
PULSE_IRQ*:	1-B8 6-C1
PWRBUS:	6-C2 12-B3 13-D3 14-C3,C8
PWRRTN:	6-D2

LABEL	PAGE COORDINATES
R/W*:	1-A1,A3,B3,C3 5-D7 6-C8
RD0-RD15:	4-D8
RED/GREEN*:	8-B8 11-A8
RESP/ECGV:	11-C1 12-D3
RTC_IRQ*:	1-B8 2-C2
SA/D0:	5-B4,C4 8-B2,B5,C2 10-C6,D2,D3,D5,D6 11-C7,D7 13-B6
SA/D0-SA/D7:	5-A2 8-D1 10-D8 11-D8 13-C8
SA/D1:	5-B4,C4 8-B2,B5,C2 10-C6,D2,D3,D5,D6 11-C7,D7 13-B6
SA/D2:	5-C4 8-B2,B5,D2 10-C6,D2,D3,D5,D6 11-C7,D7 13-B6
SA/D3:	5-C4 8-B2,B5,D2 10-C6,D2,D3,D5,D6 11-C7,D7 13-C6
SA/D4:	5-C4 8-B2,B5,D2 10-C6,D2,D3,D5,D6 11-C7,D7 13-C6
SA/D5:	5-C4 8-B5,C2,D2 10-C6,D2,D3,D5,D6 11-C7,D7 13-C6
SA/D6:	5-C4 8-B5,C2,D2 10-C6,D2,D3,D5,D6 11-C7,D7 13-C6

LABEL	PAGE COORDINATES
SA/D7:	5-C4 8-B5,C2,D2 10-C6,D2,D3,D5,D6 11-C7,D7 13-C6
SA0:	8-B3,C3 9-B6 13-A7
SA0-SA15:	5-B2 8-D1 9-D8 13-B8
SA1:	5-C3 8-B3,C3 9-B6 13-A7
SA2:	5-C3 8-B3,D3
SA3:	5-C3 8-B3,D3
SA4:	5-C3 8-B3,D3
SA5:	5-D3 8-B3,D3
SA6:	5-D3 8-B3,D3
SA7:	5-D3 8-B3,D3
SA8:	5-D3 8-B3,C5,D3
SA9:	5-D3 8-B3,C5,D3 9-B6
SA10:	5-D3 8-C3,C5,D3 9-B6
SA11:	5-D3 8-C3,C5,D3 9-B6
SA12:	5-D3 8-C3,C5,D3 9-B6
SA13:	8-C3,C5,D3 9-B6
SA14:	8-C3,C5,D3 9-B6
SA15:	8-C5 9-D6
SCC_BOOT*:	8-C1 9-C1

LABEL	PAGE COORDINATES
SCC_GDEN*:	8-C8 9-B8
SCC_GRXD:	8-C8 9-C8
SCC_GTXD:	8-C8 9-B8
SCC_IRQ*:	1-B8 8-D8
SCC_LRXD:	8-C8 9-B1
SCC_LTXD:	8-C8 9-B1
SCC_RD*:	5-D2 8-D1 9-A1 13-B8
SCC_RESET*:	8-A8 10-B1 11-B8
SCC_SEM*:	5-D2 9-D8
SCC_SRAM*:	8-D1 9-D1
SCC_WR*:	5-D2 8-D1 9-A1 11-C8 13-B8
SDI:	8-C8 14-B5
SDO:	8-C8 14-B5
SDPRAM2*:	5-D2 9-B1
SDPRAM3*:	5-D2 9-B1
SEM*:	1-D1 5-D7
SER_CMD*:	8-C8 14-B5
SHUTDOWN:	8-C8 14-B5
SR0_RD*:	9-C1 10-D8
SR0_WR*:	9-C1 10-C1
SR1_RD*:	9-C1 10-C8
SR1_WR*:	9-D1 10-C1

LABEL	PAGE COORDINATES
SR2_WR*:	9-D1 10-C1
SR3_WR*:	9-D1 10-C1
SRAM_4*:	1-D1 4-B8
SRAM_5*:	1-D1 4-B8
SRAM_EN*:	4-A8 10-B1
SR_CLK:	9-B1 10-C8
SR_RECIRC:	9-B1 10-C1
STROBE*:	8-C8 14-B5
SYNCECGRTN:	11-C1 12-D3
SYNCPULSE*:	8-D8 11-B8
SYNC_ECG:	11-C1 12-D3
TMR_CLK:	2-C2 7-D6
TRC1/ECGII:	11-C1 12-D3
TRC2/ECGI:	11-C1 12-D3
UDS*:	1-A1,A3,B3,C3 5-D7
VPP_ENBL*:	3-D8 8-B8
VPP_LOW*:	3-D8 8-B8
W/R*:	1-A1 5-D7
WATCHDOG*:	8-D8 10-B1

REFDES	PAGE COORDINATES
U1:	1-D7
U2:	1-B7
U3:	1-D5
U4:	1-D3
U5:	1-B3,C2 6-C2,D2
U6:	1-B2
U13:	2-C5
U14:	3-B7 6-A5
U15:	3-D7
U16:	3-D4
U17:	3-C4
U29:	4-D5
U30:	4-C5
U31:	4-D3
U32:	4-C3
U33:	4-B7
U36:	5-D5
U40:	6-D4
U43:	6-B4
U44:	7-D8
U45:	7-D7
U47:	7-B5
U48:	8-D7
U49:	8-B5
U50:	8-C5
U51:	8-D3
U52:	8-C3
U54:	9-B6
U55:	9-D4
U56:	9-C2,D2
U57:	10-D7
U58:	10-C7
U59:	10-D5
U60:	10-D4
U61:	10-D3
U62:	10-D2
U63:	10-B5
U64:	11-D6
U65:	11-C6

REFDES	PAGE COORDINATES
U66:	9-D3 11-A6,A7,B5,B6,D5
U67:	11-D4
U68:	12-B7,D4
U69:	13-C5
U72:	14-D7
U73:	9-C2 11-C7,D7

REFDES	PAGE COORDINATES

REFDES	PAGE COORDINATES

CONNECTOR	SIGNAL
J1-1:	PPT18
J1-2:	PPT19
J1-4:	GND
J1-6:	GND
J1-8:	GND
J1-12:	GND
J1-17:	PWRRTN
J1-18:	PWRBUS
J1-19:	PWRRTN
J1-20:	PWRBUS
J1-22:	GND
J1-24:	GND
J1-26:	GND
J1-27:	06081019
J1-28:	06011025
J1-29:	06081020
J1-30:	06011022
J1-31:	GND
J1-32:	06011012
J1-33:	GND
J1-34:	06011010
J1-35:	06081023
J1-36:	06011007
J1-37:	GND
J1-38:	06011015
J1-39:	GND
J1-40:	06011017
J1-41:	06081026
J1-42:	06011020
J1-43:	06081027
J1-44:	MINX_IRQ*
J1-45:	06011053
J1-46:	06062061
J1-47:	06011051
J1-48:	06011048
J1-49:	06011046
J1-50:	06062065
J1-51:	06011041
J1-53:	06011036
J1-54:	06081044
J1-55:	06011038
J1-57:	06011043
J1-58:	+5.0
J1-59:	5VAGND
J1-60:	-5.0
J1-61:	+5
J1-62:	+5
J1-63:	GND
J1-64:	GND

CONNECTOR	SIGNAL
J2-1:	PWRBUS
J2-2:	PWRBUS
J2-3:	+16.5
J2-4:	+16.5
J2-5:	PWRRTN
J2-6:	PWRRTN
J2-7:	14050016
J2-8:	14050020
J2-9:	14050007
J2-10:	14050011
J2-11:	14020033
J2-12:	GND
J2-13:	14020035
J2-14:	GND
J2-17:	14020045
J2-18:	GND
J2-19:	14020048
J2-20:	GND
J2-21:	14016058
J2-24:	GND
J2-25:	BATT_ID*
J2-26:	SDI
J2-27:	SDO
J2-28:	CLK
J2-29:	SER_CMD*
J2-30:	STROBE*
J2-31:	GND
J2-32:	+5
J2-33:	BATT_NC1
J2-34:	BATT_NC2
J2-35:	SHUTDOWN
J2-36:	CLR
J3-1:	PWRBUS
J3-2:	PWRBUS
J3-3:	PWRRTN
J3-4:	PWRRTN
J3-7:	GND
J3-8:	14091033
J3-9:	GND
J3-10:	14091036
J3-11:	+5
J3-12:	14091039
J3-13:	+5
J3-14:	14086011

CONNECTOR	SIGNAL
J4-1:	PWRBUS
J4-2:	PWRRTN
J4-3:	PWRBUS
J4-4:	PWRRTN
J4-5:	13078035
J4-7:	13082036
J4-8:	+5
J4-9:	13078037
J4-10:	GND
J4-11:	13082038
J4-12:	13031005
J4-13:	13078039
J4-14:	13044008
J4-15:	13082040
J4-16:	13080048
J4-17:	13078041
J4-18:	13080055
J4-19:	13082042
J4-20:	13080052
J4-21:	13080062
J4-22:	13080059
J5-1:	12090018
J5-2:	12093008
J5-3:	12094020
J5-4:	12090005
J5-5:	12090022
J5-6:	12094024
J5-7:	12093013
J5-8:	12090010
J5-9:	12090015
J5-10:	PPT41
J5-12:	GND
J5-13:	-12.8
J5-14:	GND
J5-15:	+12.8
J5-16:	+5.0
J5-17:	5VAGND
J5-18:	-5.0
J5-19:	5VAGND
J5-20:	12012032
J5-21:	12012020
J5-22:	12012022
J5-23:	12012017
J5-24:	GND
J5-25:	12012034
J5-26:	GND
J5-27:	12012025
J5-28:	12012037
J5-29:	+5
J5-30:	12012054
J5-31:	+5
J5-32:	PPT42
J5-33:	+15.5
J5-34:	PWRRTN
J5-35:	PWRRTN
J5-36:	+16.5
J5-37:	+16.5
J5-38:	PPT43
J5-39:	PWRBUS
J5-40:	PWRBUS

Assembly Revisions PN 800210

The baseline revision for this assembly is pn 800210-005B. To convert the parts list back to a previous revision, change all part numbers, descriptions, and quantities as indicated in the revision tables given below.

PN 800210-001E

This version of the assembly was used first in all of the A-series Tram modules. The corresponding parts location diagram, pn 800210-001E/002B, and schematic diagram, SD800210-001C, are found later in this chapter.

PN 800210-002B

This version of the assembly replaced all processor PCBs in the A and SL-series Tram modules. The corresponding parts location diagram, pn 800210-001E/002B, and schematic diagram, SD800210-001C, are found later in this chapter.

PN 800210-005A

This version of the assembly replaced all -001/002 processor PCBs in all Tram modules.

Item	Description	Revision's Part Number	Baseline Part Number	Qty
C1	Cap, NPO, 47pF, 5%, 50V, SM	411576-008	411576-019	1
–	Schematic Diagram	800210-005A	800210-005B	

Parts List PN 800210-001E/002B

Item	Parts List	Part Number	Qty
BTI	Battery, 3V, Lithium, Coin-Type	401981-001	1
C1	Cap, Cer, 47pF, 5%, 50V, SM	1181-470	1
C2	Cap, Var, 4 - 25pF, SM	401977-001	1
C3, 6, 7, 10, 11, 17, 19,23, 25, 27, 29, 31-37,42, 43, 46-49, 61-65,72, 73, 74, 78, 79, 80,83-94, 96, 98, 99	Cap, Cer, 0.1µF, 20%, 50V	404370-001	50
C4, 97	Cap, Cer, 0.01µF, 5%, 50V, SM	1182-103	2
C5, 24, 26	Cap, Tant, 4.7µF, 20%, 20V, SM	402004-001	3
C12, 20, 21, 28, 30	Cap, Tant, 10µF, 20%, 10V, SM	1176-106	5
C13, 14, 15, 18, 38, 39,76	Cap, Cer, 0.47µF, 20%	1187-474	7
C16, 40, 41, 44, 45, 68-71, 75, 77, 81, 82, 95	Cap, Cer, 0.22µF, 20%, 50V, SM	1187-224	14
C22	Cap, Tant, 10µF, 20%, 25V, SM	1152-106	1
C100, 101, 102	Cap, Cer, 0.001µF, 5%, 50V, SM	1181-102	3
CR1, 6	Diode, Schottky, SM BAT54	401985-001	2
CR2, 10-13	Diode Pair, Series, SM D7000	2013-201	5
CR3	Diode, Transient Voltage Suppression, SM P6SMB20AT1	403939-001	1
CR5	Diode, SM MMAD4148	401980-001	1
CR8, 9	Diode, Schottky, Barrier, 1A, 40V, SM MBRS140T3	403187-001	2
CR14, 15	Diode, Transient Voltage Suppressor, Bidirectional, 6.8V, 600W	404121-001	2
DS1	Diode, Light-Emitting (Red/Green) LDGR 2340	402428-001	1
J1	Connector, PC Header, 64-Pin	1847-064	1
J2	Connector, PC Header, 24-Pin, Vertical	1778-224	1
J3	Connector, PC Header, 14-Pin	408623-001	1
J4	Connector, PC Header, 22-Pin	408623-002	1
J5	Connector, PC Header, 40-Pin	1778-240	1
Q1, 2, 3, 6, 7-10, 14, 16, 18, 19	Transistor, NPN, SM T3904	2511-001	12
Q4, 5	Transistor, NPN, SM BCX56-1	2712-056	2
Q11	Transistor, PNP, SM T4403	401978-001	1
Q13, 15, 17	Transistor, PNP, SM T3906	2511-101	3
R1, 2, 30, 31, 32, 57, 69, 70	Res, Cer, 1K, 1%, 1/8W, SM	1082-103	8
R3, 7, 35, 47, 48, 72, 101-104	Res, Cer, 49.9Ω, 1%, 1/8W, SM	1082-799	10
R4, 28	Res, Cer, 100Ω, 1%, 1/8W, SM	1082-755	2
R5, 9, 25, 29, 34, 36, 82-85	Res, Cer, 100K, 1%, 1/8W, SM	1082-100	10

Item	Parts List	Part Number	Qty
R6, 10, 11, 12, 22, 23, 24, 26, 27, 37-41, 44, 52, 53, 59, 68, 88, 98	Res, Cer, 10K, 1%, 1/8W, SM	1082-104	22
R8, 46, 90, 92	Res, Cer, 1.5K, 1%, 1/8W, SM	1082-768	4
R13	Res, Cer, 200K, 0.1%, 1/8W, SM	1067-832	1
R14	Res, Cer, 22.9K, 0.1%, 1/8W, SM	1067-833	1
R19, 20	Res, 0Ω, SM	1082-756	2
R21, 60, 61, 62, 93-97	Res, Cer, 150Ω, 1%, 1/8W, SM	1082-767	9
R42, 43	Res, Cer, 47.5K, 1%, 1/8W, SM	1082-757	2
R45, 49, 54	Res, Cer, 3.4K, 1%, 1/8W, SM	1082-759	3
R50, 55, 56	Res, Cer, 34.8K, 10%, 1/4W, SM	1082-791	3
R51	Res, Cer, 249Ω, 1%, 1/8W, SM	1082-793	1
R63	Res, Cer, 2.4M, 5%, 1/8W, SM	1081-484	1
R64	Res, Var, 500K, Top Adjust	401979-001	1
R65	Res, Cer, 3.9M, 5%, 1/8W, SM	1081-485	1
R66	Res, Cer, 200Ω, 1%, 1/8W, SM	1082-762	1
R67	Res, Cer, 22M, 5%, 1/8W, SM	1081-486	1
R71, 99	Res, Cer, 340Ω, 1%, 1/8W, SM	1082-790	2
R73-77, 89, 91, 100	Res, Cer, 4.75K, 1%, 1/8W, SM	1082-760	8
R78-81	Res, Cer, 750Ω, 1%, 1/8W, SM	1082-764	4
S1	Switch, Dual In-Line, 6-Station, SM	401960-001	1
U1, 47	Buffer/Driver, Octal, SM HC541	401974-001	2
U2	EPLD, 68000 Interrupt Encoder, PLCC	404570-001	1
U3	Microprocessor, 16-MHz, PLCC 68HC000	401968-001	1
U4	EPLD, 68000 Bus Control, PLCC	408137-001	1
U5	Inverter, Hex, SM AC04	3062-004	1
U6, 14, 33, 56, 73	OR Gate, 2-Input, Quad, SM AC32	3062-032	5
U7, 10, 11, 12	Res Ntwk, 100K, SM	1061-104	4
U8, 9, 40	Transceiver, Bus, Octal, SM ACQ245	408019-001	3
U13	Clock/Timer, SM DP8570	401970-001	1
U15	Volt Rgltr, Adj, SM LP2951A	3076-001	1
U16, 17	EEPROM, Flash, 2K x 8-Bit, 150nS, PLCC 28F020 (For -001 Only)	405858-002	2
U16, 17	EEPROM, Flash, 2K x 8-Bit, 150nS, PLCC 28F020 (For -002 Only)	408792-002	2
U29-32	RAM, Static, 128K x 8-Bit, 100nS 628128L	406255-001	4
U36	RAM, Dual Port, 4k x 8-Bit, 70nS, PLCC IDT7134	404007-002	1
U37	RAM, Dual-Port, 4k x 8-Bit, w/Arbitration Logic, 70nS, PLCC IDT71342	408123-001	1
U38, 41, 71	Res Ntwk, 100Ω	1062-101	3
U39	Res Ntwk, 10K	1061-103	1
U43	Buffer/Driver, Octal, SM AC541M	401973-001	1
U44	Oscillator, CMOS, 14.7456MHz, SM	401480-001	1
U45	Flip-Flop, Type D, Dual, SM HC74	3038-074	1

Item	Parts List	Part Number	Qty
U46	Data Selector, 1-Line-of-4-Line, Three-State Output, Dual/Multiplexer, 4-Line-to-1-Line, Three-State Output, Dual, SM AC253	404012-001	1
U48	PAL, Programmed, Communication Control, PLCC 80C152JB	400368-001	1
U49	Latch, Transparent, Three-State Output, Octal, SM HC573	401971-001	1
U50	AND Gate, 2-Input, Quad, SM AC08	402717-001	1
U51	RAM, Static, 32K x 8-Bit, SM 62256FLP	3202-256	1
U52	EPROM, Programmed, 80C152 Boot Code, PLCC	404904-002	1
U53, 70	Res Ntwk, 10K	1062-103	2
U54	EPLD, 80C152 Communication Interface, PLCC	408139-001	1
U55	Decoder/Demultiplexer, 4-Line-to-16-Line, SM HC154	404210-001	1
U57, 58	Shift Register, 8-Bit, Serial Input, Serial/Parallel Output, Tri-State Output, SM HC595	401969-001	2
U59-62	Shift Register, Parallel Load, 8-Bit, SM HC165	401972-001	4
U63	Microprocessor Support Circuit, SM MAX695	401966-001	1
U64, 65	Register, 8-Bit, SM HC273	3038-273	2
U66	Inverter, Hex, SM HC04	3038-004	1
U67	Hybrid, Analog Output	401205-001	1
U68	Buffer, Tri-State Output, Hex, SM HC367	401967-001	1
U69	Transceiver, Bus, Octal, SM HC245	401963-001	1
U72	Line Driver/Receiver, Differential, SM DS8921AM	404013-001	1
W1, 2, 3	Socket, Mini	1818-201	7
Y1	Crystal, 32.768kHz, SM	402085-001	1
-	Connector, Header, Male/Male, 64-Pin (for J1)	409203-001	1
-	Jumper, Mini (for W1, W3)	1859-201	2
-	Lubricant, Anti-Fretting (for U67)	410286-001	AR
-	Mounting Pad, Battery (for BT1)	404368-001	1
-	Socket, Hybrid (for U67)	404596-001	2
-	Socket, PLCC, 28-Pin, SM (for U2) (For -001 Only)	402413-001	1
-	Socket, PLCC, 32-Pin, SM (for U52) (For -001 Only)	403802-001	1
-	Socket, PLCC, 44-Pin, SM (for U4, 54) (For -001 Only)	402412-001	2
-	Socket, PLCC, 68-Pin, SM (for U48)	402411-001	1
-	Circuit Board	800211-001C	1
-	Schematic Diagram	SD800210-001C	–

Schematic Diagram PN SD800210-001C

1 of 18

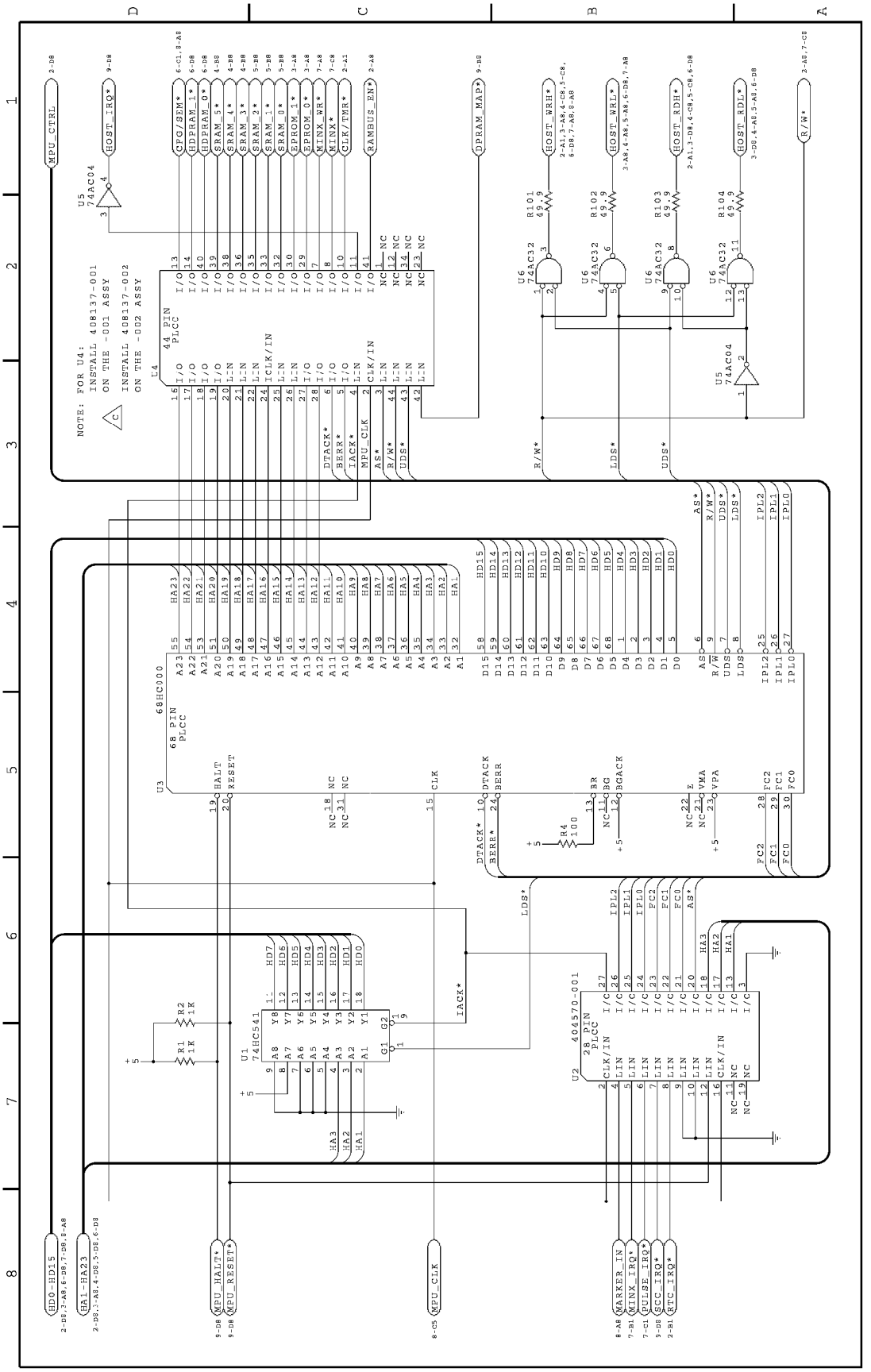

2 of 18

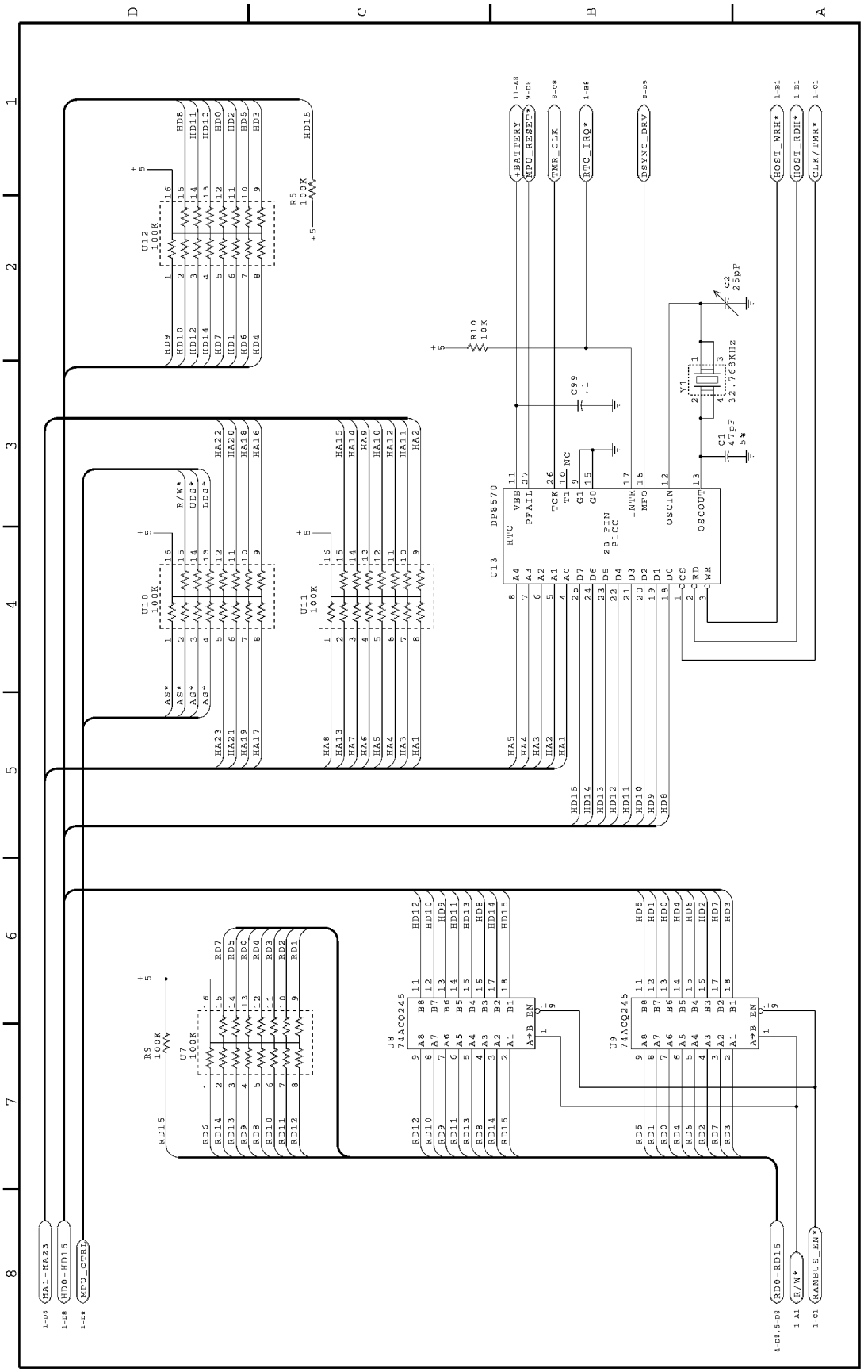
U12
100K
R5
100K
U10
100K
U11
100K
U7
100K
R9
100K
R10
10K
C99
.1
C1
47pF
5%
C2
25pF
Y1
32.768KHz
U13
DP8570
RTC
28 PIN
PLCC
U8
74ACQ245
U9
74ACQ245
+BATTERY
MPU_RESET*
TMR_CLK
RTC_IRQ*
DSYNC_DRV
HOST_WRH*
HOST_RDH*
CLK/TMR*
HA1-HA23
HD0-HD15
MPU_CTRL
RD0-RD15
R/W*
RAMBUS_EN*

3 of 18

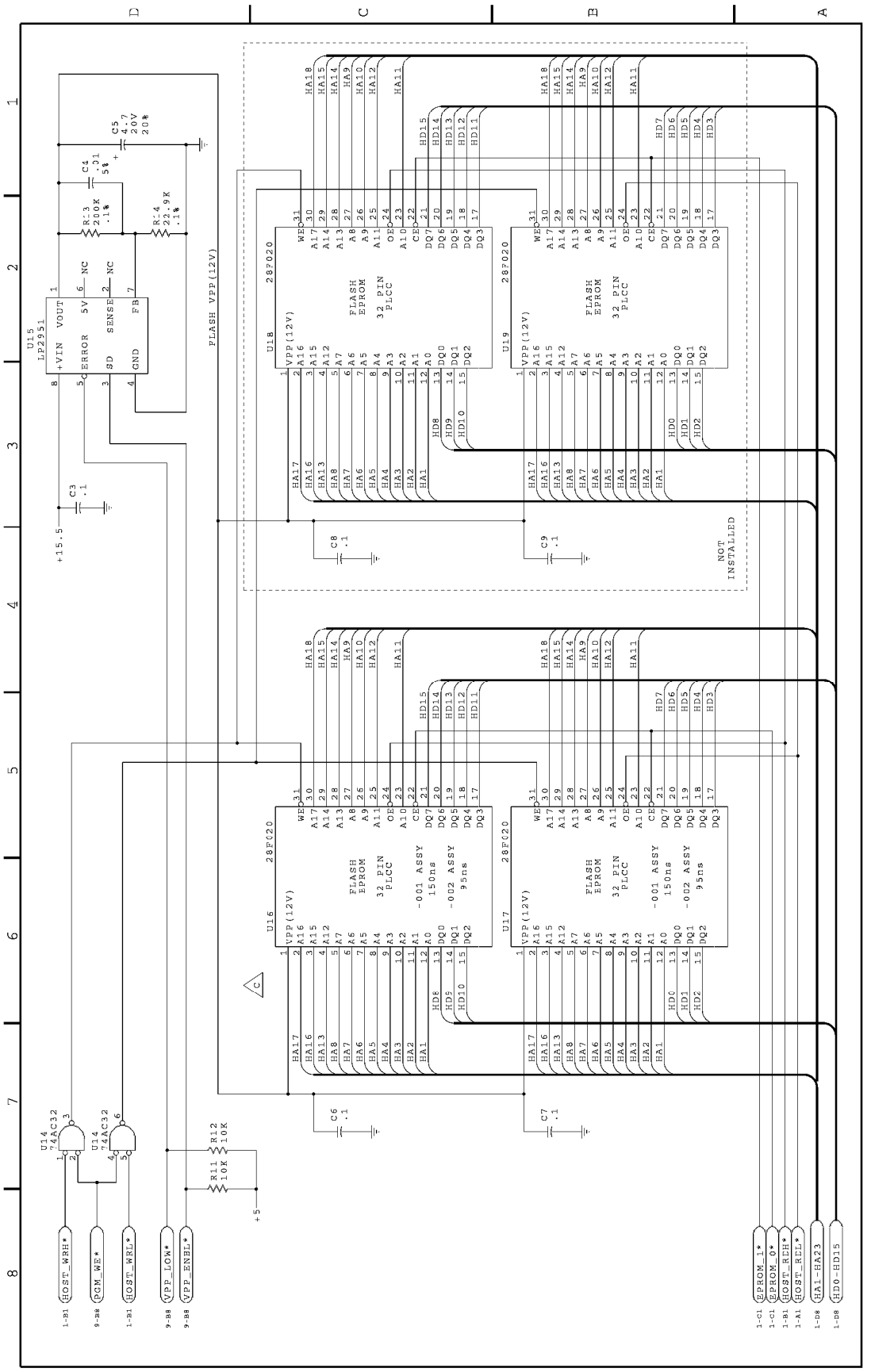
U15
LP2951
+VIN
VOUT
ERROR
5V
SD
SENSE
GND
FB
NC
NC
C5
4.7
20V
20%
C4
.01
5%
R13
200K
.1%
R14
22.9K
.1%
PLASH VPP(12V)
C3
.1
+15.5
U18
28F020
U19
28F020
FLASH
EPROM
32 PIN
PLCC
NOT
INSTALLED
C8
.1
C9
.1
U16
28F020
U17
28F020
-001 ASSY
150ns
-002 ASSY
95ns
C6
.1
C7
.1
U14
74AC32
U14
74AC32
R12
10K
R11
10K
+5
HOST_WRH*
PGM_WE*
HOST_WRL*
VPP_LOW*
VPP_ENBL*
EPROM_1*
EPROM_0*
HOST_RLH*
HOST_RLL*
HA1-HA23
HD0-HD15

4 of 18

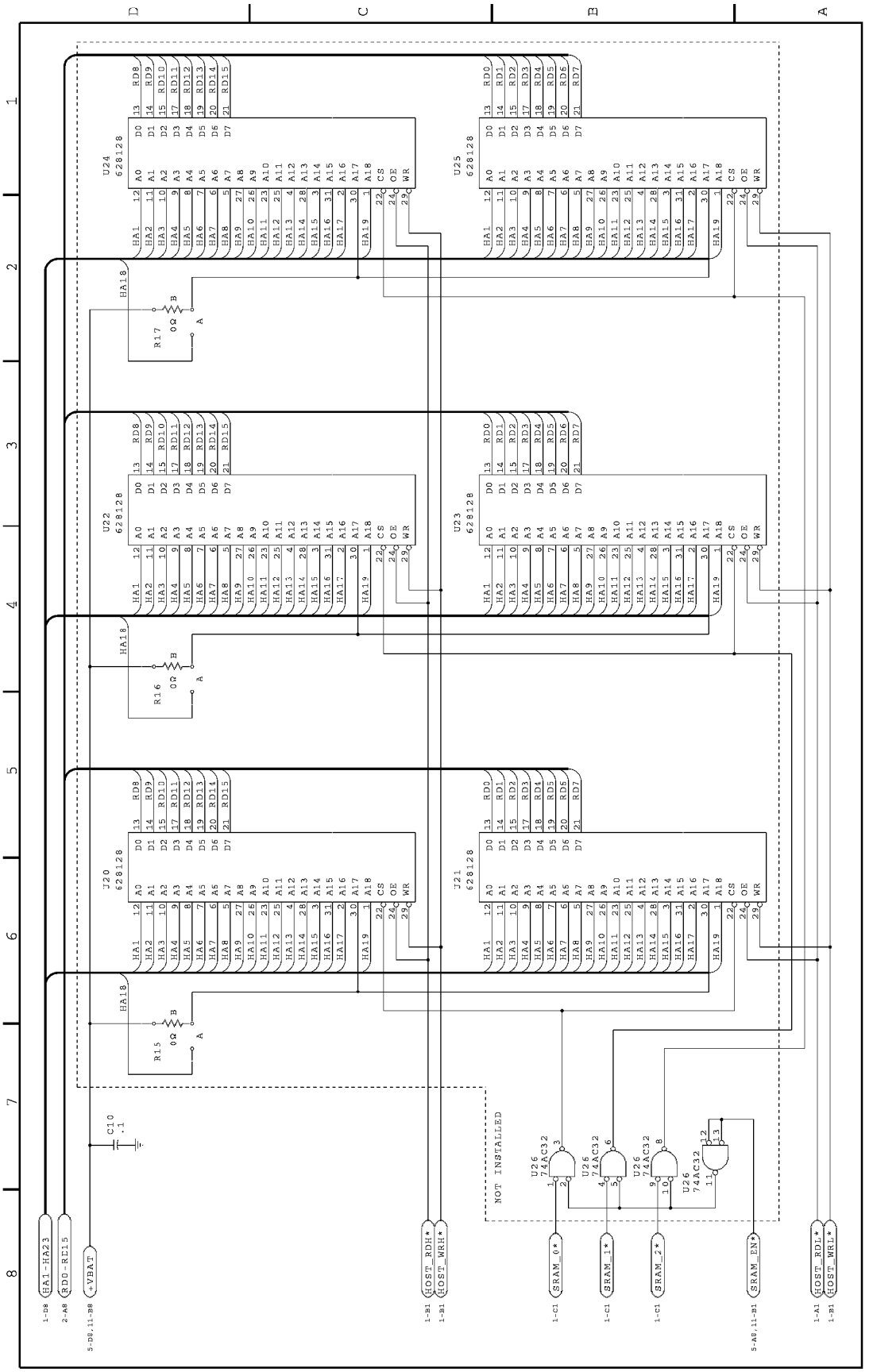
U24
628128
U25
628128
U22
628128
U23
628128
U20
628128
U21
628128
R17
0Ω
R16
0Ω
R15
0Ω
HA18
C10
.1
NOT INSTALLED
U26
74AC32
HA1-HA23
RD0-RD15
+VBAT
HOST_RDH*
HOST_WRH*
SRAM_0*
SRAM_1*
SRAM_2*
SRAM_EN*
HOST_RDL*
HOST_WRL*

5 of 18

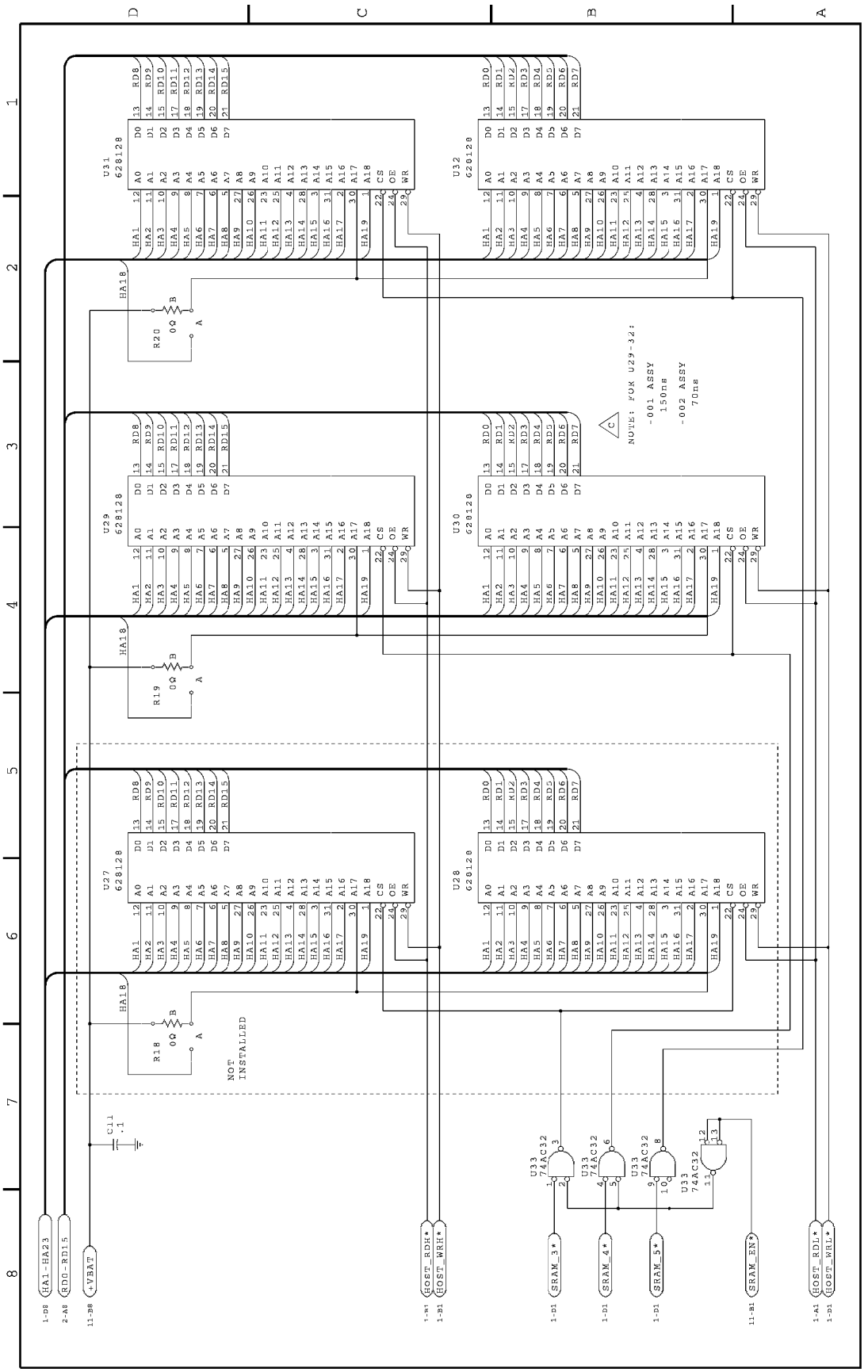
U31
628128
U32
628128
U29
628128
U30
628128
U27
628128
U28
628128
R20
0Ω
R19
0Ω
R18
0Ω
NOTE: FOR U29-32:
-001 ASSY
150ns
-002 ASSY
70ns
NOT
INSTALLED
C11
.1
U33
74AC32
HA1-HA23
RD0-RD15
+VBAT
HOST_RDH*
HOST_WRH*
SRAM_3*
SRAM_4*
SRAM_5*
SRAM_EN*
HOST_RDL*
HOST_WRL*

6 of 18

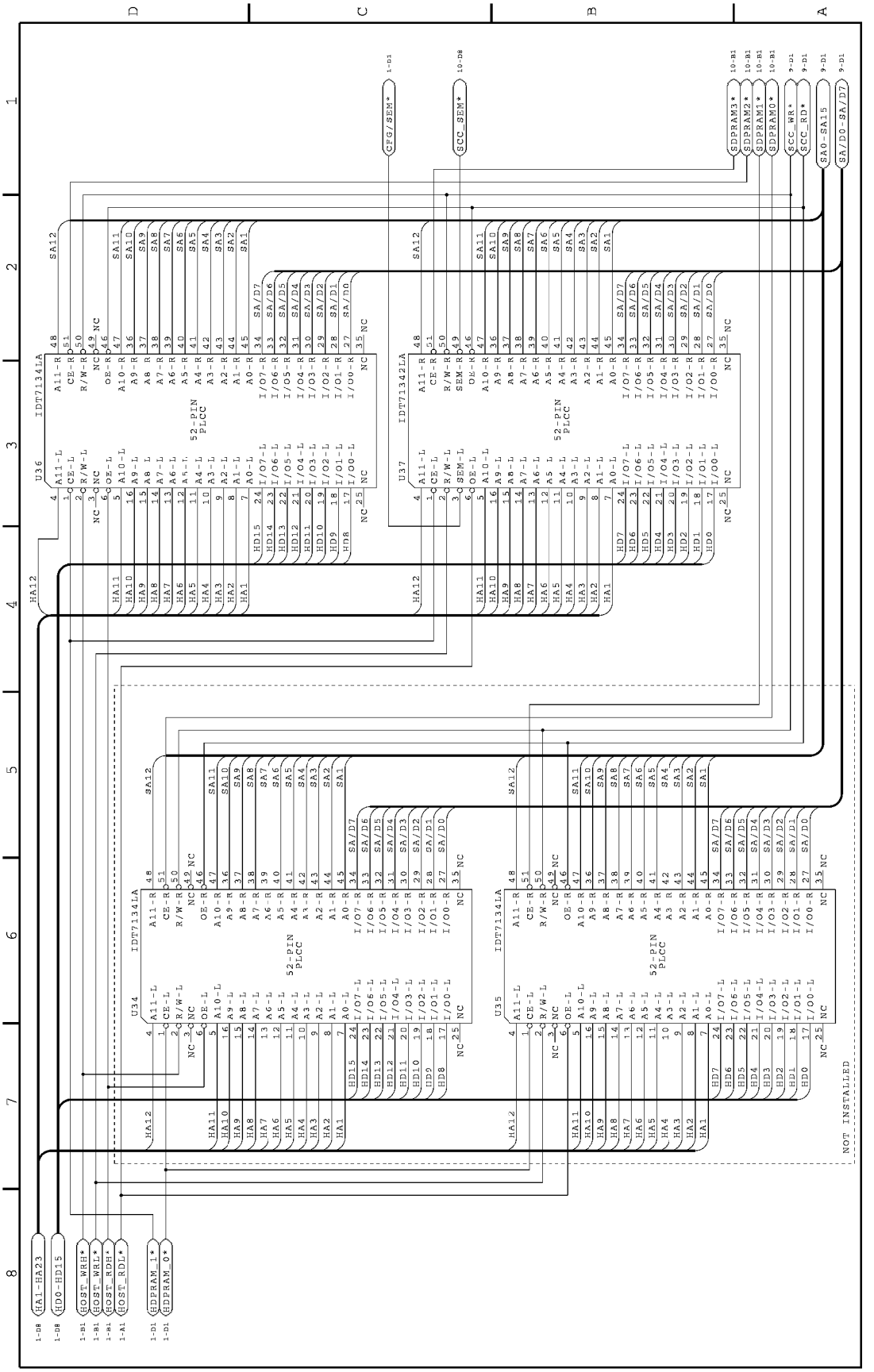
U36
IDT71341LA
52-PIN PLCC
U37
IDT71342LA
U34
U35
CFG/SEM*
SCC_SEM*
SDPRAM3*
SDPRAM2*
SDPRAM1*
SDPRAM0*
SCC_WR*
SCC_RD*
SA0-SA15
SA/D0-SA/D7
HA1-HA23
HD0-HD15
HOST_WRH*
HOST_WRL*
HOST_RDH*
HOST_RDL*
HDPRAM_1*
HDPRAM_0*
NOT INSTALLED

7 of 18

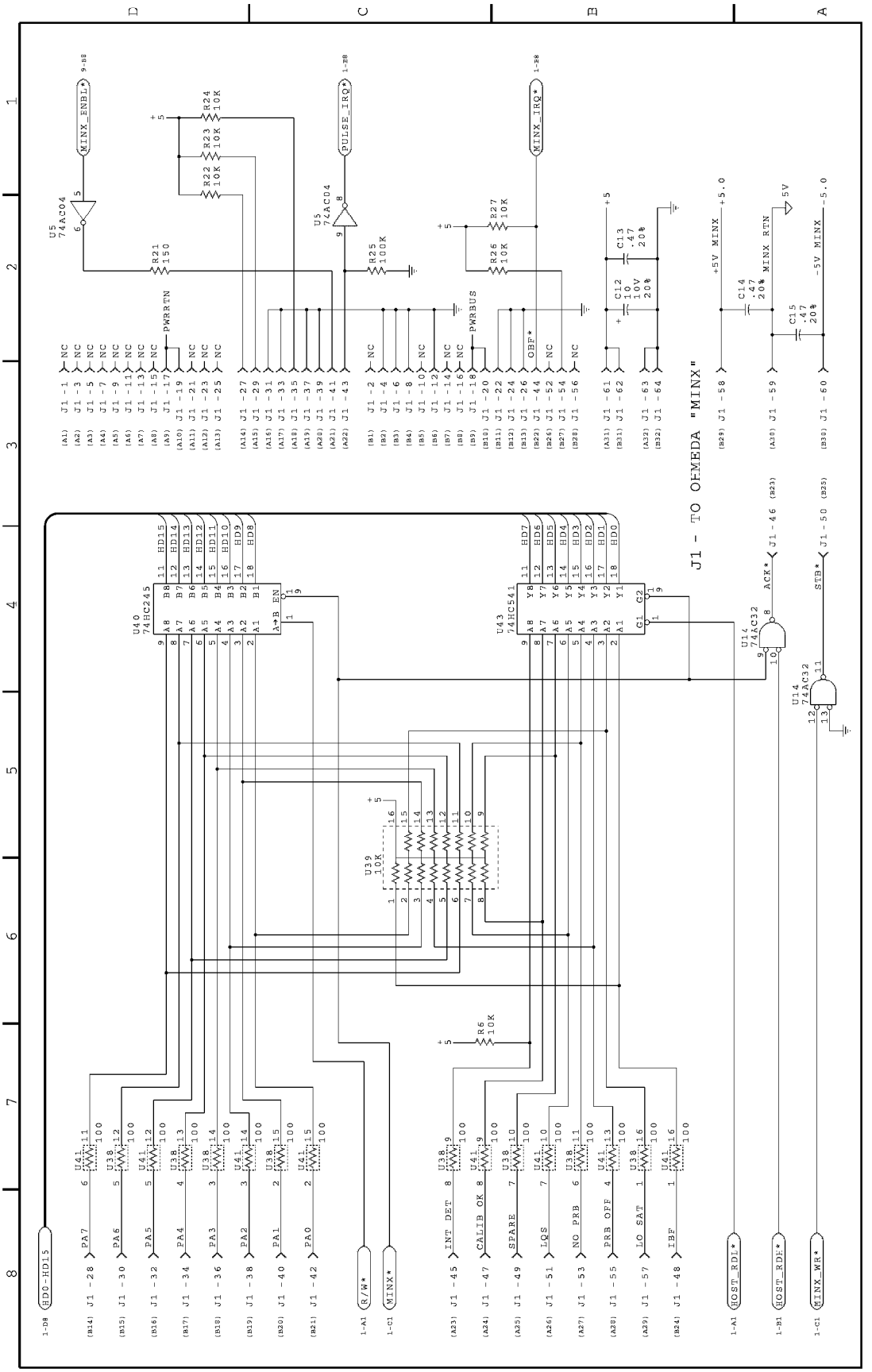
MINX_ENBL*
U5 74AC04
R21 150
R22 10K
R23 10K
R24 10K
PULSE_IRQ*
U5 74AC04
R25 100K
MINX_IRQ*
R27 10K
R26 10K
C12 10 10V 20%
C13 .47 20%
+5V MINX
+5.0
C14 .47 20%
MINX RTN
5V
C15 .47 20%
-5V MINX
-5.0
PWRRTN
PWRBUS
OBF*
J1 - TO OFMEDA "MINX"
U40 74HC245
U43 74HC541
U14 74AC32
ACK*
STB*
U39 10K
R6 10K
HD0-HD15
PA7
PA6
PA5
PA4
PA3
PA2
PA1
PA0
R/W*
MINX*
INT DET
CALIB OK
SPARE
LQS
NO PRB
PRB OFF
LO SAT
IBF
HOST_RDL*
HOST_RDL*
MINX_WR*

8 of 18

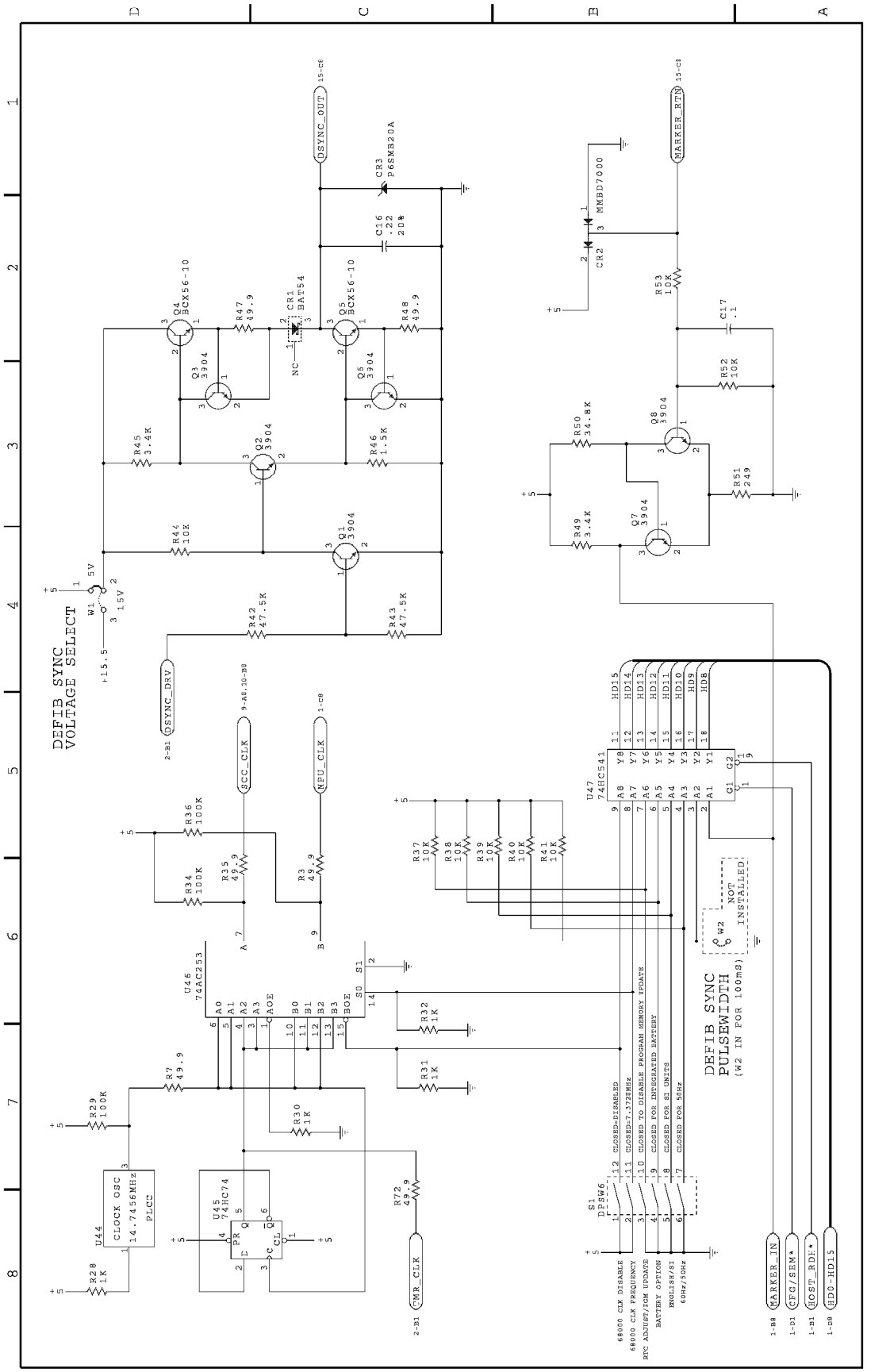
DEFIB SYNC
VOLTAGE SELECT
DEFIB SYNC
PULSEWIDTH
(W2 IN FOR 100mS)
NOT INSTALLED
CLOCK OSC
14.7456MHz
PLCC
SYNC_OUT
MARKER_RTN
SYNC_DRV
SCC_CLK
NFU_CLK
CMR_CLK
MARKER_IN
CFG/SEM*
HOST_RD*
HD0-HD15
68000 CLK DISABLE
68000 CLK FREQUENCY
RTC ADJUST/ROM UPDATE
BATTERY OPTION
ENGLISH/SI
60Hz/50Hz
CLOSED-DISABLED
CLOSED-7.3728MHz
CLOSED TO DISABLE PROGRAM MEMORY UPDATE
CLOSED FOR INTEGRATED BATTERY
CLOSED FOR SI UNITS
CLOSED FOR 50Hz

9 of 18

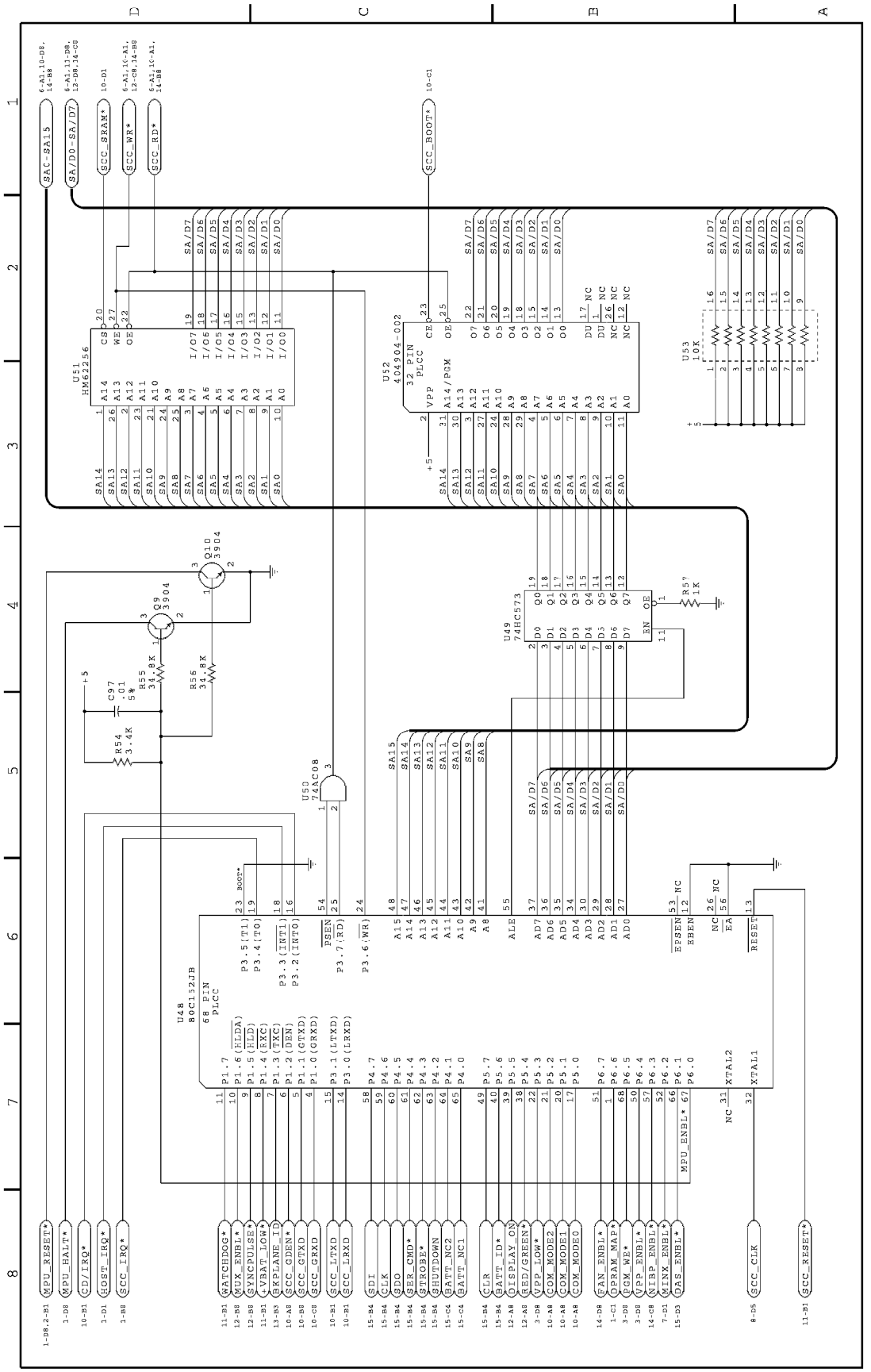
U48
80C152JB
68 PIN
PLCC
U51
HM62256
U52
404904-002
32 PIN
PLCC
U49
74HC573
U50
74AC08
U53
10K
Q9
3904
Q10
3904
R54
3.4K
R55
34.8K
R56
34.8K
R57
1K
C97
.01
5%
SAC-SA15
SA/D0-SA/D7
SCC_SRAM*
SCC_WR*
SCC_RD*
SCC_BOOT*
MPU_RESET*
MPU_HALT*
CD/IRQ*
HOST_IRQ*
SCC_IRQ*
WATCHDOG*
MUX_ENBL*
SYNCPULSE*
VBAT_LOW*
BKPLANE_ID
SCC_GDEN*
SCC_GTXD
SCC_GRXD
SCC_LTXD
SCC_LRXD
SDI
CLK
SDO
SER_CMD*
STROBE*
SHUTDOWN
BATT_NC2
BATT_NC1
CLR
BATT_ID*
DISPLAY_ON
RED/GREEN*
VPP_LOW*
COM_MODE2
COM_MODE1
COM_MODE0
FAN_ENBL*
DRAM_MAP*
PGM_WE*
VPP_ENBL*
MISP_ENBL*
MINK_ENBL*
DAS_ENBL*
SCC_CLK
SCC_RESET*

10 of 18

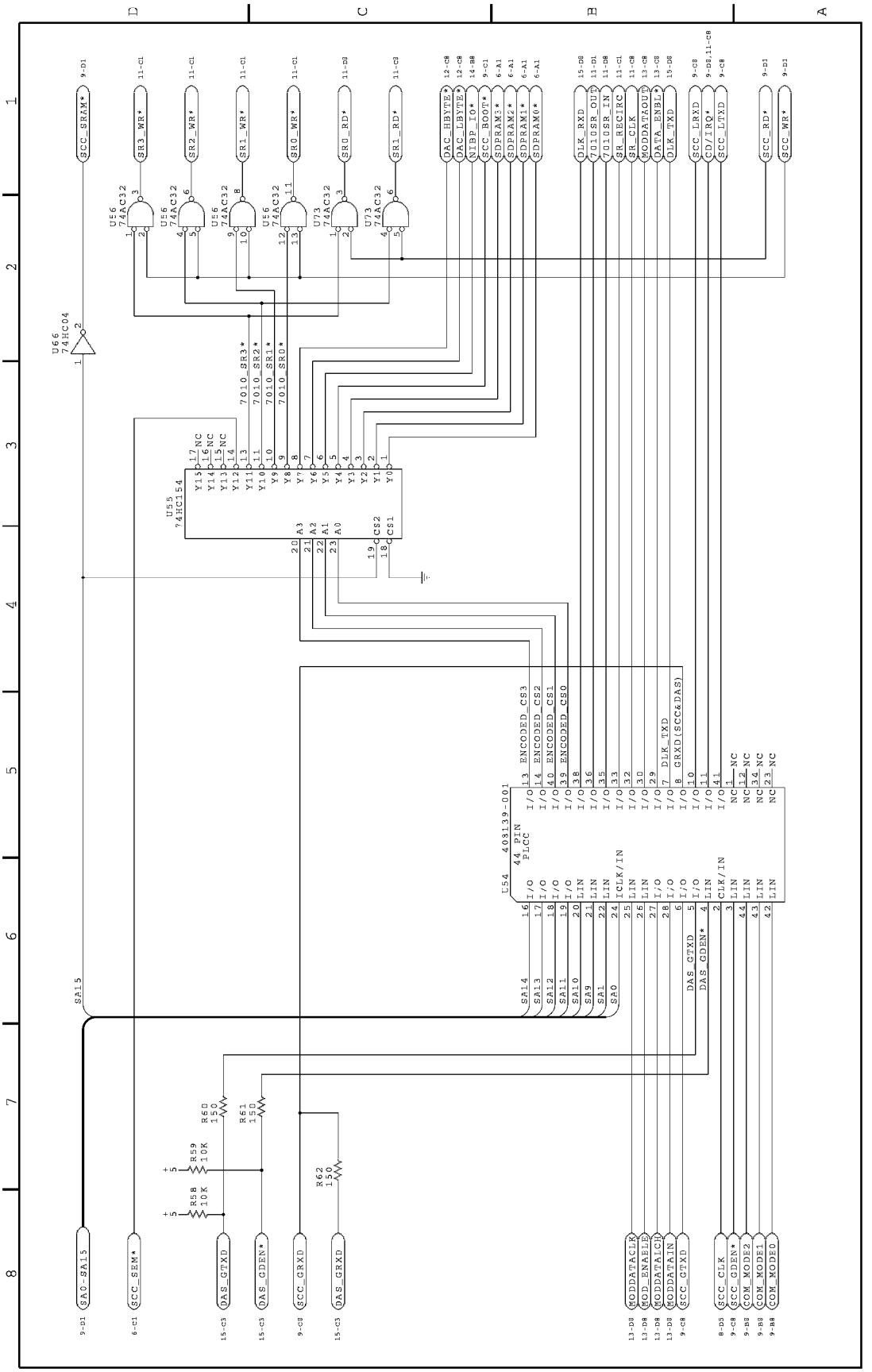
U56 74AC32
U66 74HC04
U55 74HC154
U54 403139-001 44 PIN PLCC
SCC_SRAM*
SR3_WR*
SR2_WR*
SR1_WR*
SR0_WR*
SR0_RD*
SR1_RD*
DAC_HBYTE*
DAC_LBYTE*
NIBP_IO*
SCC_BOOT*
SDPRAM3*
SDPRAM2*
SDPRAM1*
SDPRAM0*
CLK_RXD
7010SR_OUT
7010SR_IN
SR_RECTRC
SR_CLK
MODDATAOUT
DATA_ENBL*
CLK_TXD
SCC_LRXD
CD/IRQ*
SCC_LTXD
SCC_RD*
SCC_WR*
7010_SR3*
7010_SR2*
7010_SR1*
7010_SR0*
ENCODED_CS3
ENCODED_CS2
ENCODED_CS1
ENCODED_CS0
DAS_GTXD
DAS_GDEN*
SA15
SA0-SA15
SCC_SEM*
SCC_GRXD
DAS_GRXD
MODDATACLK
MOD_ENABLE
MODDATACH
MODDATAIN
SCC_GTXD
SCC_CLK
SCC_GDEN*
COM_MODE2
COM_MODE1
COM_MODE0
R58 10K
R59 10K
R60 150
R61 150
R62 150

11 of 18

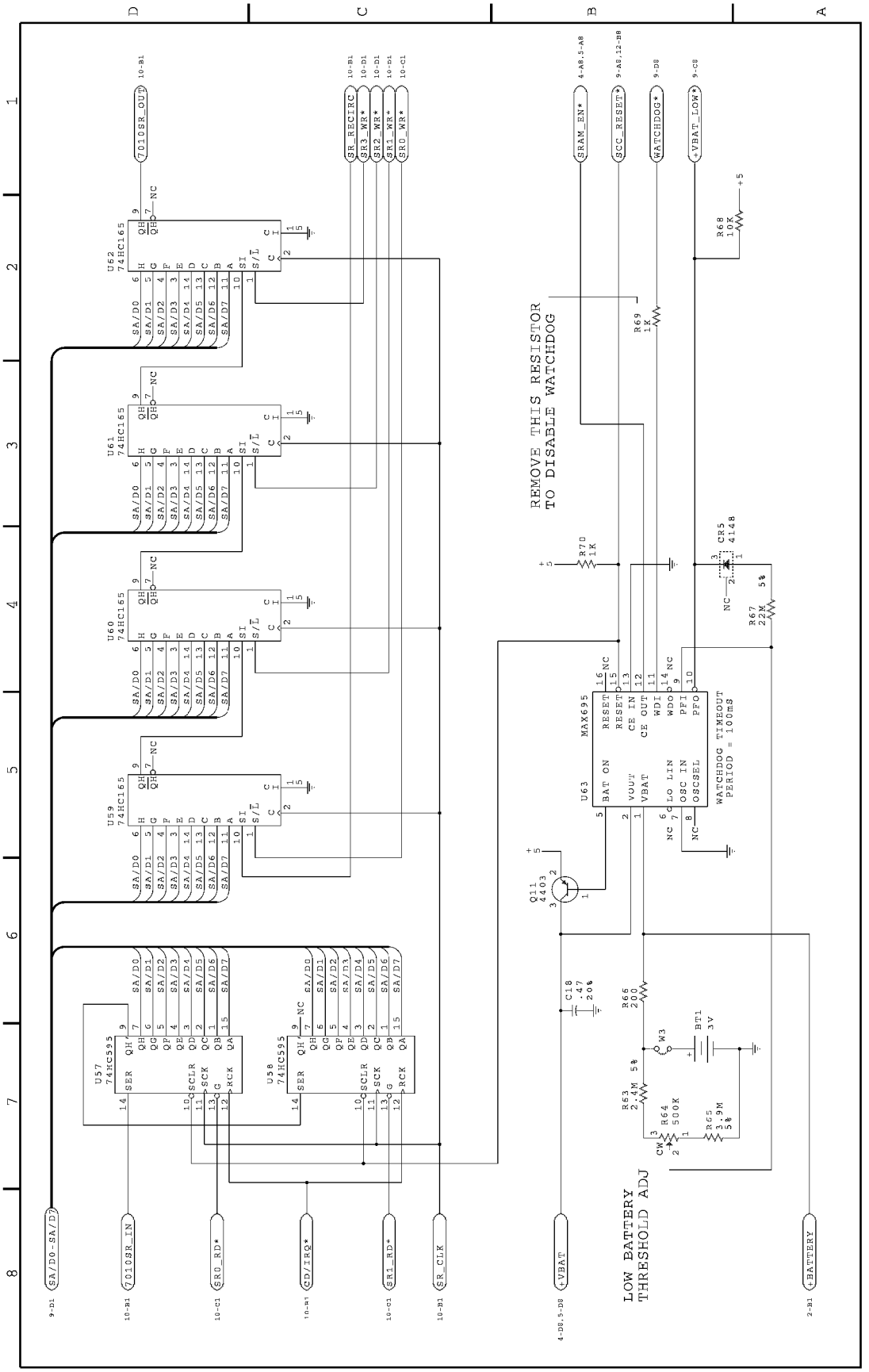
REMOVE THIS RESISTOR
TO DISABLE WATCHDOG
LOW BATTERY
THRESHOLD ADJ
WATCHDOG TIMEOUT
PERIOD = 100MS
U52
74HC165
U61
74HC165
U60
74HC165
U59
74HC165
U57
74HC595
U58
74HC595
U63
MAX695
Q11
4403
R68
10K
R69
1K
R70
1K
CR5
4148
R67
22M
R66
200
R63
2.4M
R64
500K
R65
3.9M
BT1
3V
C18
.47
SA/D0-SA/D7
7010SR_IN
SR0_RD*
CD/IRQ*
SR1_RD*
SR_CLK
+VBAT
+BATTERY
7010SR_OUT
SR_RECIRC
SR3_WR*
SR2_WR*
SR1_WR*
SR0_WR*
SRAM_EN*
SCC_RESET*
WATCHDOG*
+VBAT_LOW*

12 of 18

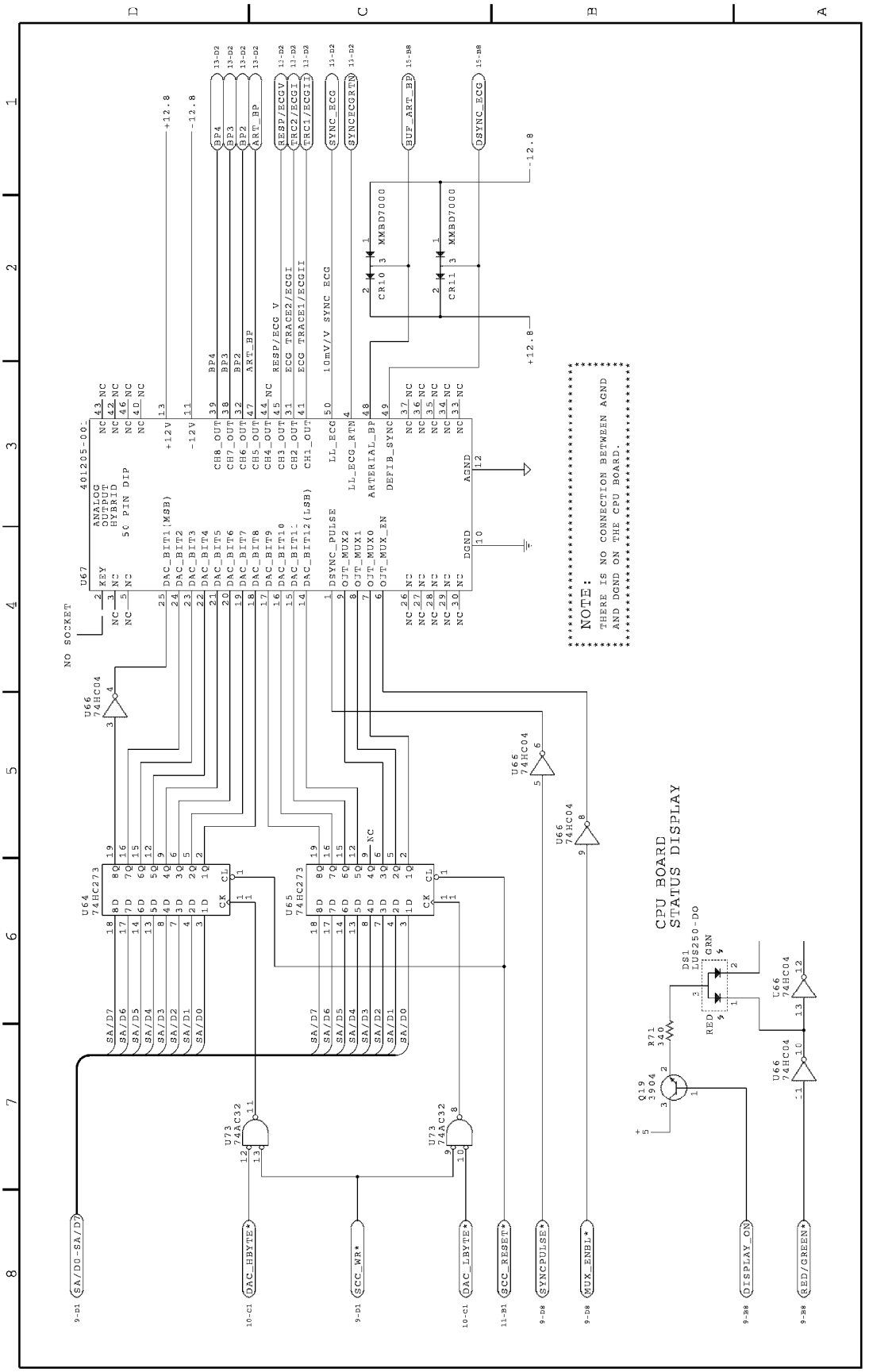
U67
401205-00
ANALOG OUTPUT HYBRID
50 PIN DIP
NO SOCKET
U64 74HC273
U65 74HC273
U66 74HC04
U65 74HC04
U73 74AC32
Q19 2904
R71 340
DS1 LUS250-DO
RED
GRN
CR10 MMBD7000
CR11 MMBD7000
NOTE:
THERE IS NO CONNECTION BETWEEN AGND AND DGND ON THE CPU BOARD.
CPU BOARD STATUS DISPLAY
SA/D0-SA/D7
DAC_HBYTE*
SCC_WR*
DAC_LBYTE*
SCC_RESET*
SYNCPULSE*
MUX_ENBL*
DISPLAY_ON
RED/GREEN*

13 of 18

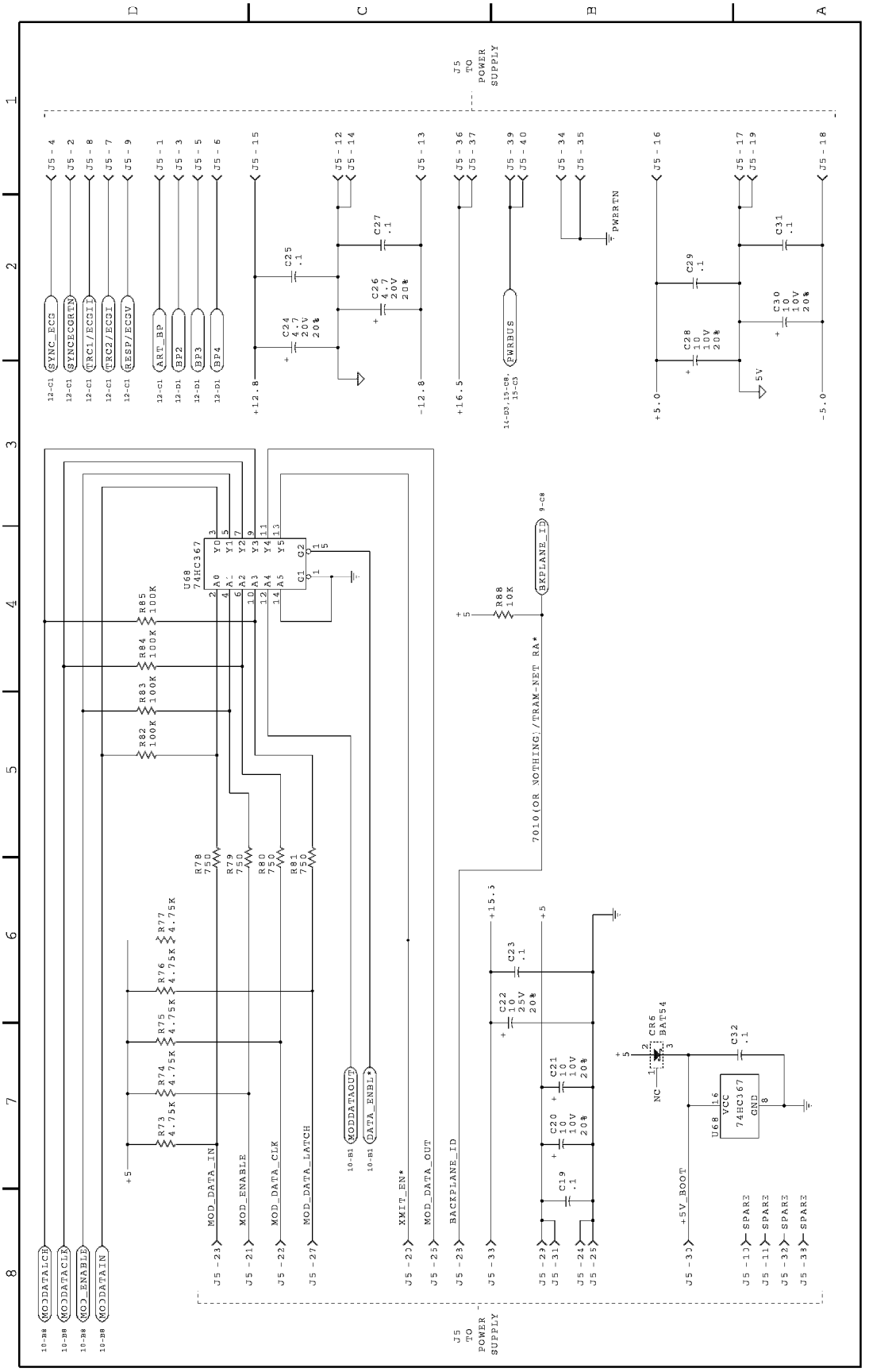
SYNC_ECG
SYNCECGRTN
TRC1/ECGI
TRC2/ECGI
RESP/ECGV
ART_BP
BP2
BP3
BP4
PWRBUS
PWRRTN
BKPLANE_ID
MODDATALCH
MODDATACLK
MOD_ENABLE
MODDATAIN
MODDATAOUT
DATA_ENBL*
MOD_DATA_IN
MOD_ENABLE
MOD_DATA_CLK
MOD_DATA_LATCH
XMIT_EN*
MOD_DATA_OUT
BACKPLANE_ID
+5V_BOOT
SPARE
J5 TO POWER SUPPLY
U68 74HC367
7010(OR NOTHING)/TRAM-NET RA*
CR6 BAT54
NC

14 of 18

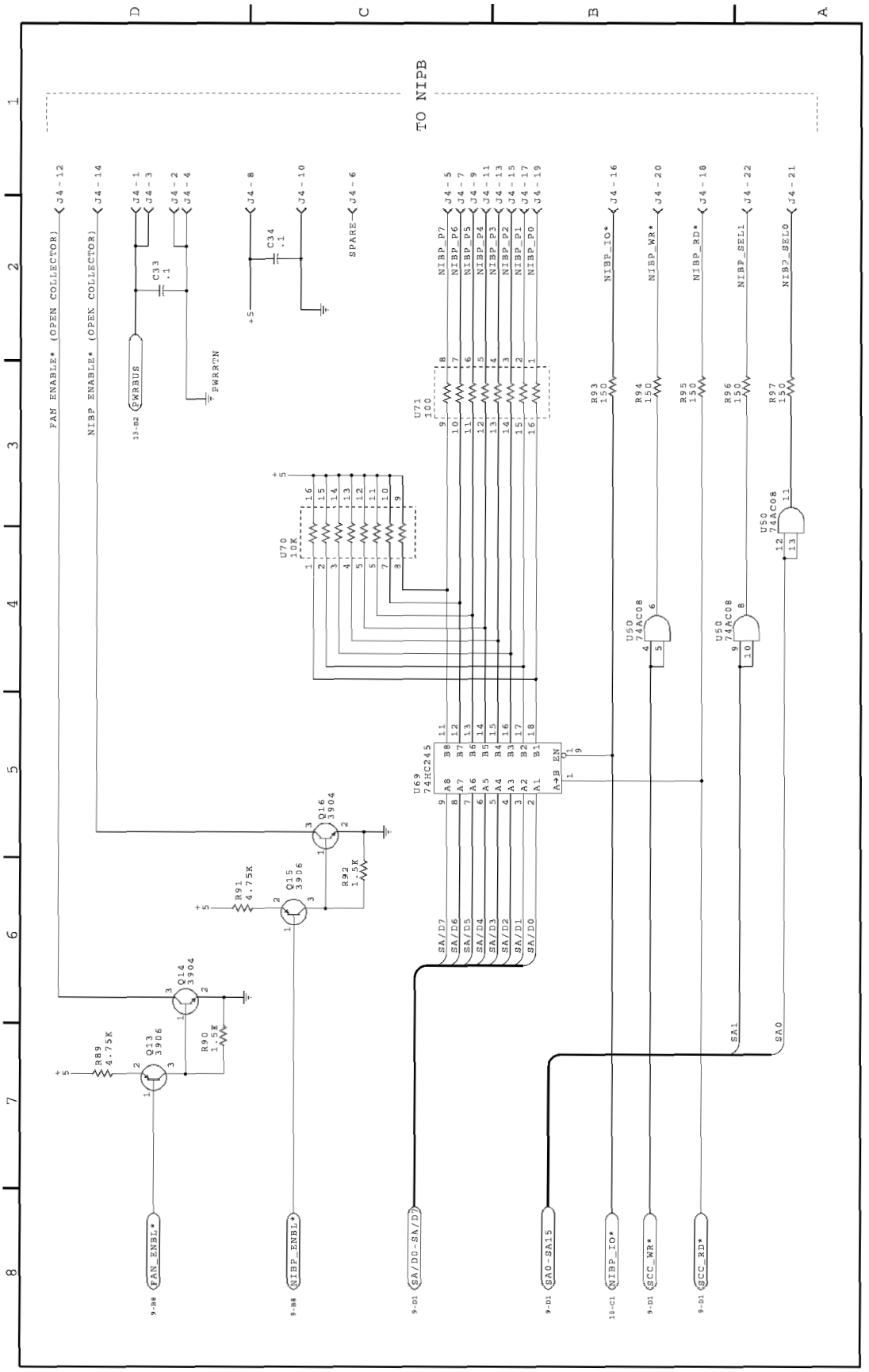
TO NIPB
FAN ENABLE* (OPEN COLLECTOR)
NIBP ENABLE* (OPEN COLLECTOR)
PWRBUS
PWRRTN
C33 .1
C34 .1
SPARE
NIBP_P7
NIBP_P6
NIBP_P5
NIBP_P4
NIBP_P3
NIBP_P2
NIBP_P1
NIBP_P0
NIBP_IO*
NIBP_WR*
NIBP_RD*
NIBP_SEL1
NIBP_SEL0
U71 100
U70 10K
R93 150
R94 150
R95 150
R96 150
R97 150
U50 74AC08
U69 74HC245
Q16 3904
Q15 3906
Q14 3904
Q13 3906
R91 4.75K
R92 1.5K
R89 4.75K
R90 1.5K
SA/D7
SA/D6
SA/D5
SA/D4
SA/D3
SA/D2
SA/D1
SA/D0
SA1
SA0
FAN_ENBL*
NIBP_ENBL*
SA/D0-SA/D7
SA0-SA15
NIBP_IO*
SCC_WR*
SCC_RD*

15 of 18

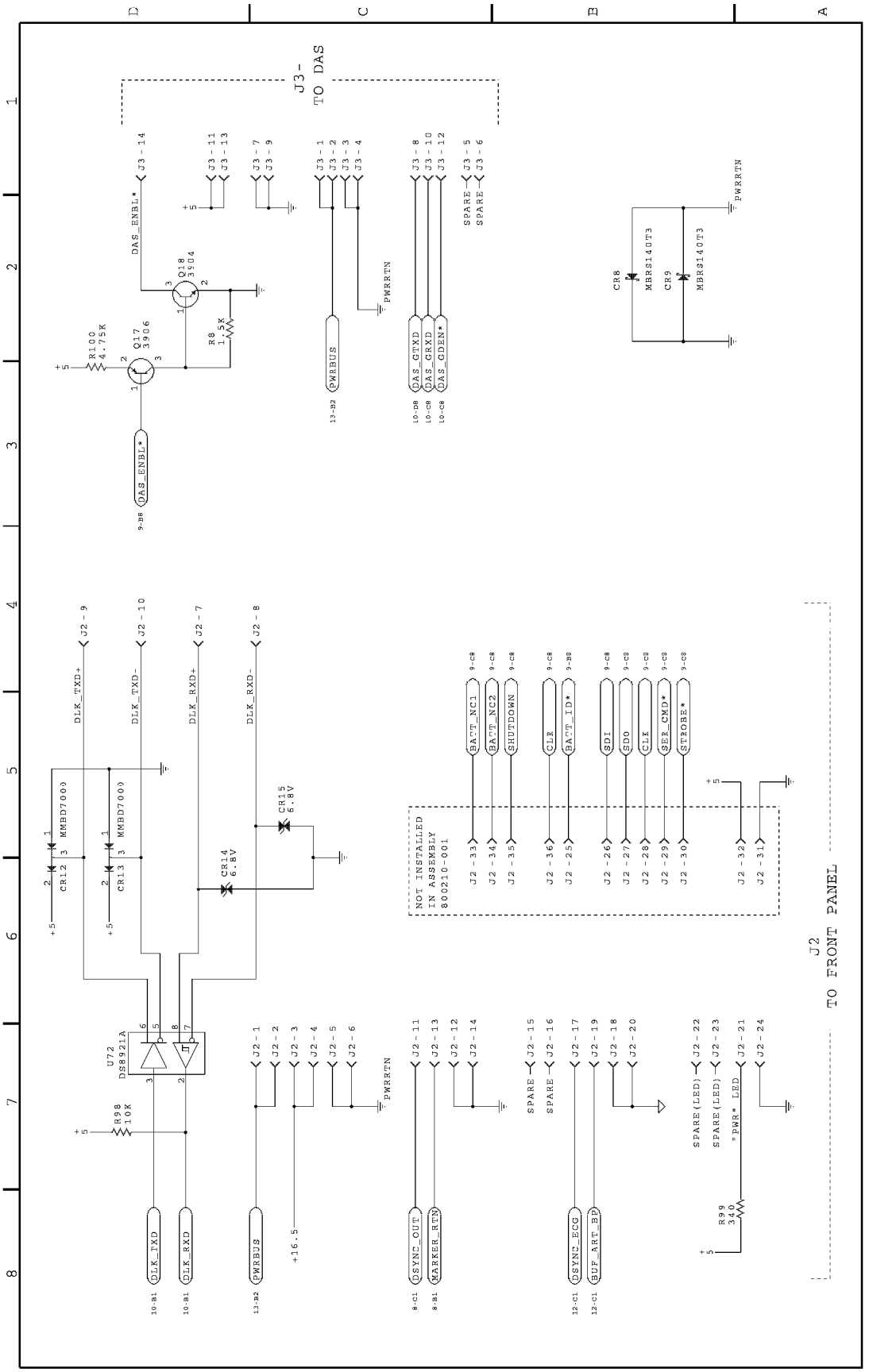
J3-
TO DAS
DAS_ENBL*
Q18
3904
Q17
3906
R100
4.75K
R8
1.5K
PWRBUS
PWRRTN
DAS_GTXD
DAS_GRXD
DAS_GDEN*
SPARE
CR8
CR9
MBR3140T3
DLK_TXD+
DLK_TXD-
DLK_RXD+
DLK_RXD-
MMBD7000
CR12
CR13
CR14
6.8V
CR15
6.8V
U72
DS8921A
R98
10K
DLK_TXD
DLK_RXD
+16.5
NOT INSTALLED
IN ASSEMBLY
800210-001
BATT_NC1
BATT_NC2
SHUTDOWN
CLR
BATT_ID*
SDI
SDO
CLK
SER_CMD*
STROBE*
SYNC_OUT
MARKER_RTN
SYNC_ECG
BUF_ART_BD
SPARE(LED)
"PWR" LED
R99
340
J2
TO FRONT PANEL

16 of 18

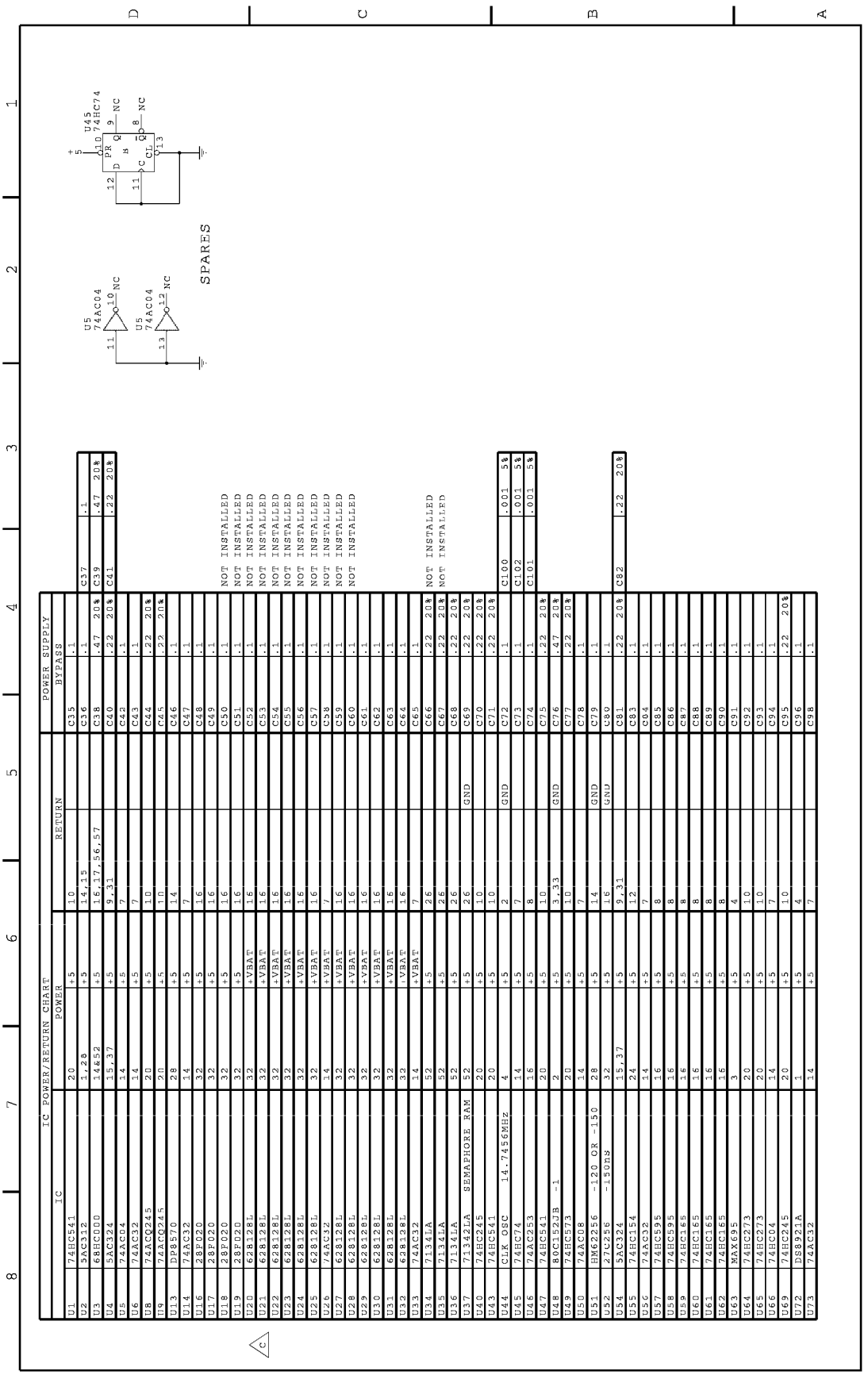

IC POWER/RETURN CHART

	IC	POWER	RETURN	POWER SUPPLY BYPASS	
U1	74HC541	20	10	C35	.1
U2	5AC312	1,28	14,15	C36	.1
U3	68HC000	14&52	16,17,56,57	C38	.47 20%
U4	5AC324	15,37	9,31	C40	.22 20%
U5	74AC04	14	7	C42	.1
U6	74AC32	14	7	C43	.1
U8	74ACQ245	20	10	C44	.22 20%
U9	74ACQ245	20	10	C45	.22 20%
U13	DP8570	28	14	C46	.1
U14	74AC32	14	7	C47	.1
U16	28F020	32	16	C48	.1
U17	28F020	32	16	C49	.1
U18	28F020	32	16	C50	.1
U19	28F020	32	16	C51	.1
U20	628128L	32	16	C52	.1
U21	628128L	32	16	C53	.1
U22	628128L	32	16	C54	.1
U23	628128L	32	16	C55	.1
U24	628128L	32	16	C56	.1
U25	628128L	32	16	C57	.1
U26	74AC32	14	7	C58	.1
U27	628128L	32	16	C59	.1
U28	628128L	32	16	C60	.1
U29	628128L	32	16	C61	.1
U30	628128L	32	16	C62	.1
U31	628128L	32	16	C63	.1
U32	628128L	32	16	C64	.1
U33	74AC32	14	7	C65	.1
U34	71341A	52	26	C66	.22 20%
U35	71341A	52	26	C67	.22 20%
U36	71341A	52	26	C68	.22 20%
U37	71342LA SEMAPHORE RAM	52	26	C69	.22 20%
U40	74HC245	20	10	C70	.22 20%
U43	74HC541	20	10	C71	.22 20%
U44	CLK OSC 14.7456MHz	4	2	C72	.1
U45	74HC74	14	7	C73	.1
U46	74AC253	16	8	C74	.1
U47	74HC541	20	10	C75	.22 20%
U48	80C152JB -1	2	3,33	C76	.47 20%
U49	74HC573	20	10	C77	.22 20%
U50	74AC08	14	7	C78	.1
U51	HM62256 -120 OR -150	28	14	C79	.1
U52	27C256 -150ns	32	16	C80	.1
U54	5AC324	15,37	9,31	C81	.22 20%
U55	74HC154	24	12	C83	.1
U56	74AC32	14	7	C84	.1
U57	74HC595	16	8	C85	.1
U58	74HC595	16	8	C86	.1
U59	74HC165	16	8	C87	.1
U60	74HC165	16	8	C88	.1
U61	74HC165	16	8	C89	.1
U62	74HC165	16	8	C90	.1
U63	MAX695	3	4	C91	.1
U64	74HC273	20	10	C92	.1
U65	74HC273	20	10	C93	.1
U66	74HC04	14	7	C94	.1
U69	74HC245	20	10	C95	.22 20%
U72	DS8921A	1	4	C96	.1
U73	74AC32	14	7	C98	.1

C37	.1		
C39	.47 20%		
C41	.22 20%		
C100	.001 5%		
C102	.001 5%		
C101	.001 5%		
C82	.22 20%		

NOT INSTALLED
NOT INSTALLED
NOT INSTALLED
NOT INSTALLED
NOT INSTALLED
NOT INSTALLED
NOT INSTALLED
NOT INSTALLED
NOT INSTALLED
NOT INSTALLED
NOT INSTALLED
NOT INSTALLED

REFDES	PAGE COORDINATES
U1:	1-D7
U10:	2-D4
U11:	2-C4
U12:	2-D2
U13:	2-B4
U14:	3-D7 7-A4,A5
U15:	3-D3
U16:	3-C6
U17:	3-B6
U18:	3-C3
U19:	3-B3
U2:	1-B7
U20:	4-D6
U21:	4-C6
U22:	4-D4
U23:	4-C4
U24:	4-D2
U25:	4-C2
U26:	4-B8
U27:	5-D6
U28:	5-C6
U29:	5-D4
U3:	1-D5
U30:	5-C4
U31:	5-D2
U32:	5-C2
U33:	5-B8
U34:	6-D7
U35:	6-B7
U36:	6-D3
U37:	6-C3
U38:	7-B7,C7,D7
U39:	7-C6
U4:	1-D3
U40:	7-D4
U41:	7-B7,C7,D7
U43:	7-B4
U44:	8-D8
U45:	8-D8
U46:	8-D7

REFDES	PAGE COORDINATES
U47:	8-B5
U48:	9-D7
U49:	9-B4
U5:	1-B3,D2 7-C2,D2
U50:	9-C5 14-A4,B4
U51:	9-D3
U52:	9-C3
U53:	9-B3
U54:	10-B6
U55:	10-D4
U56:	10-C2,D2
U57:	11-D7
U58:	11-C7
U59:	11-D5
U6:	1-B2
U60:	11-D4
U61:	11-D3
U62:	11-D2
U63:	11-B5
U64:	12-D6
U65:	12-C6
U66:	10-D3 12-A6,A7,B5,B6,D5
U67:	12-D4
U68:	13-B7,D4
U69:	14-C5
U7:	2-D7
U70:	14-C4
U71:	14-C3
U72:	15-D7
U73:	10-C2 12-C7,D7
U8:	2-C7
U9:	2-B7

REFDES	PAGE COORDINATES

REFDES	PAGE COORDINATES

CONN	LABEL
J1-12:	GND
J1-17:	PWRRTN
J1-18:	PWRBUS
J1-19:	PWRRTN
J1-20:	PWRBUS
J1-22:	GND
J1-24:	GND
J1-26:	GND
J1-27:	07081019
J1-28:	07011007
J1-29:	07081020
J1-30:	07011010
J1-31:	GND
J1-32:	07011012
J1-33:	GND
J1-34:	07011015
J1-35:	07081023
J1-36:	07011017
J1-37:	GND
J1-38:	07011020
J1-39:	GND
J1-4:	GND
J1-40:	07011022
J1-41:	07081026
J1-42:	07011025
J1-43:	07081027
J1-44:	MINX_IRQ*
J1-45:	07011036
J1-46:	07062061
J1-47:	07011038
J1-48:	07011053
J1-49:	07011041
J1-50:	07057065
J1-51:	07011043
J1-53:	07011046
J1-54:	07081044
J1-55:	07011048
J1-57:	07011051
J1-58:	+5.0
J1-59:	5VAGND
J1-6:	GND
J1-60:	-5.0
J1-61:	+5
J1-62:	+5
J1-63:	GND
J1-64:	GND
J1-8:	GND

CONN	LABEL
J2-1:	PWRBUS
J2-10:	15029013
J2-11:	DSYNC_OUT
J2-12:	GND
J2-13:	MARKER_RTN
J2-14:	GND
J2-17:	DSYNC_ECG
J2-18:	AGND
J2-19:	BUF_ART_BP
J2-2:	PWRBUS
J2-20:	AGND
J2-21:	15016058
J2-24:	GND
J2-25:	BATT_ID*
J2-26:	SDI
J2-27:	SDO
J2-28:	CLK
J2-29:	SER_CMD*
J2-3:	+16.5
J2-30:	STROBE*
J2-31:	GND
J2-32:	+5
J2-33:	BATT_NC1
J2-34:	BATT_NC2
J2-35:	SHUTDOWN
J2-36:	CLR
J2-4:	+16.5
J2-5:	PWRRTN
J2-6:	PWRRTN
J2-7:	15029014
J2-8:	15029015
J2-9:	15029012
J3-1:	PWRBUS
J3-10:	DAS_GRXD
J3-11:	+5
J3-12:	DAS_GDEN*
J3-13:	+5
J3-14:	15086011
J3-2:	PWRBUS
J3-3:	PWRRTN
J3-4:	PWRRTN
J3-7:	GND
J3-8:	DAS_GTXD
J3-9:	GND

CONN	LABEL
J4-1:	PWRBUS
J4-10:	GND
J4-11:	14082038
J4-12:	14031005
J4-13:	14082039
J4-14:	14044008
J4-15:	14082040
J4-16:	14080048
J4-17:	14082041
J4-18:	14080055
J4-19:	14082042
J4-2:	PWRRTN
J4-20:	14080052
J4-21:	14080062
J4-22:	14080059
J4-3:	PWRBUS
J4-4:	PWRRTN
J4-5:	14082035
J4-7:	14082036
J4-8:	+5
J4-9:	14082037
J5-1:	ART_BP
J5-12:	AGND
J5-13:	-12.8
J5-14:	AGND
J5-15:	+12.8
J5-16:	+5.0
J5-17:	5VAGND
J5-18:	-5.0
J5-19:	5VAGND
J5-2:	SYNCECGRTN
J5-20:	13009032
J5-21:	13009020
J5-22:	13009022
J5-23:	13009017
J5-24:	GND
J5-25:	13009034
J5-26:	GND
J5-27:	13009025
J5-28:	BKPLANE_ID
J5-29:	+5
J5-3:	BP2
J5-30:	13009054
J5-31:	+5
J5-33:	+15.5
J5-34:	PWRRTN
J5-35:	PWRRTN
J5-36:	+16.5
J5-37:	+16.5
J5-39:	PWRBUS
J5-4:	SYNC_ECG
J5-40:	PWRBUS
J5-5:	BP3
J5-6:	BP4
J5-7:	TRC2/ECGI
J5-8:	TRC1/ECGII
J5-9:	RESP/ECGV

28 NBP PCB PN 800316

General **28-2**

Parts Location Diagram PN 800316-002A **28-3**

Parts List PN 800316-002A **28-5**

Schematic Diagram PN SD800316-002A **28-7**

Parts Location Diagram PN 800316-001C **28-9**

Parts List PN 800316-001C **28-10**

Schematic Diagram PN SD800316-001C **28-12**

General

There are two different versions of the NBP PCB:

- pn 800316-001, was used first in all modules; and
- pn 800210-002, replaced the first version of the PCB.

NOTE
You may replace version -001 or -002 circuit board with a -002 circuit board, but do not replace a -002 with a -001 circuit board.

Parts Location Diagram PN 800316-002A

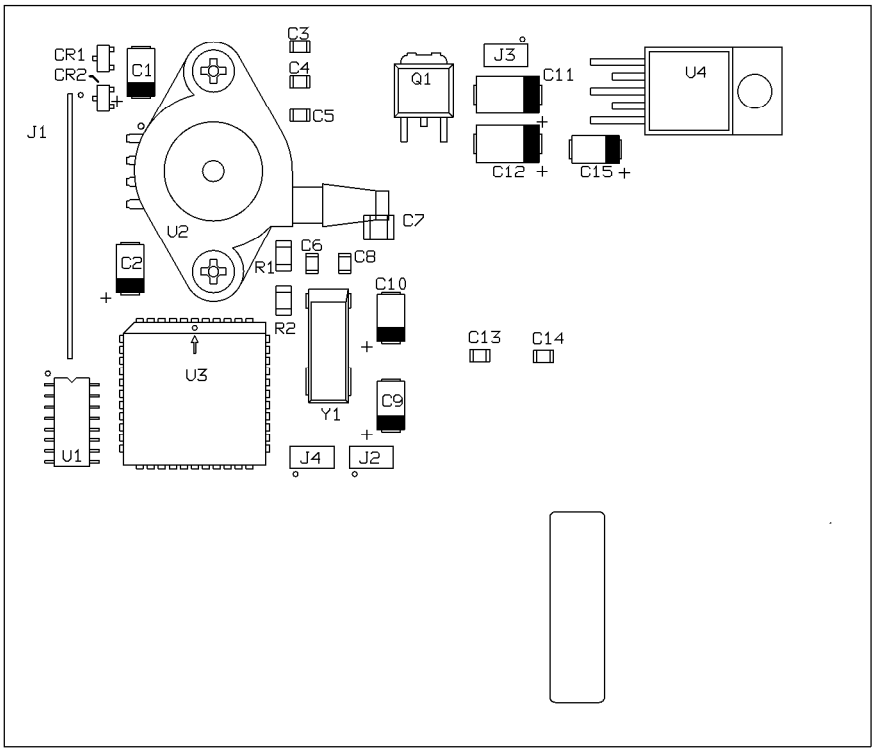

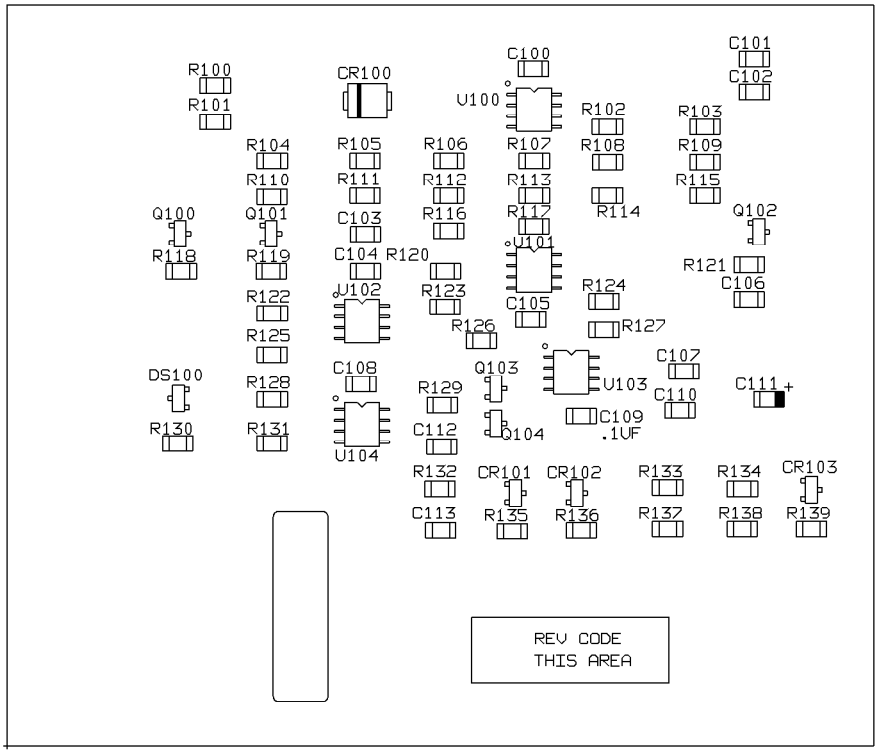

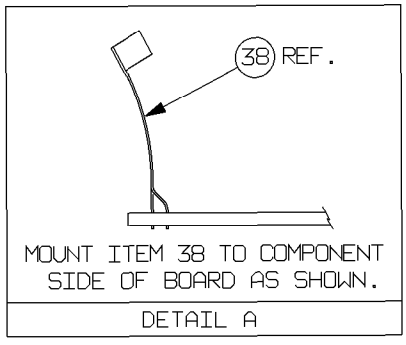
38 REF.
MOUNT ITEM 38 TO COMPONENT SIDE OF BOARD AS SHOWN.
DETAIL A

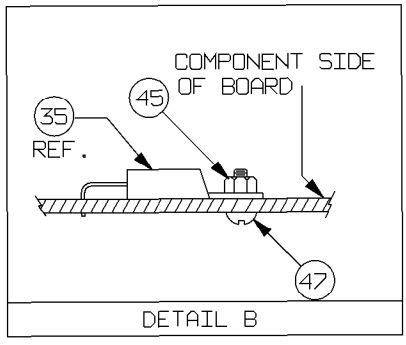
COMPONENT SIDE OF BOARD
45
35
REF.
47
DETAIL B

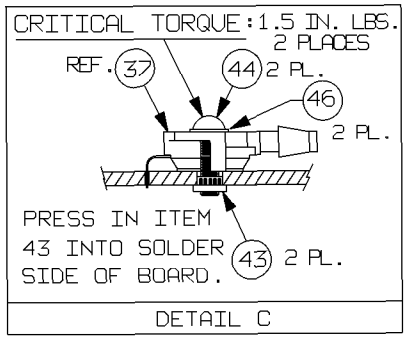
CRITICAL TORQUE: 1.5 IN. LBS. 2 PLACES
REF. 37
44 2 PL.
46
2 PL.
PRESS IN ITEM 43 INTO SOLDER SIDE OF BOARD.
43 2 PL.
DETAIL C

Parts List PN 800316-002A

Item	Parts List	Part Number	Qty
C1, 2	Cap, Tant, 1µF, 20%, 10V, SM	1176-106	2
C3, 5	Cap, Cer, 470pF, 5%, 50V, SM	1181-471	2
C4	Cap, Cer, 0.001µF, 5%, 50V, SM	1181-102	1
C6, 8	Cap, Cer, 22pF, 5%, 50V, SM	1181-220	2
C7	Cap, Cer, 0.22µF, 20%, 50V, SM	1187-224	1
C9, 10, 15	Cap, Tant, 4.7µF, 20%, 20V, SM	402004-001	3
C11, 12	Cap, Tant, 22µF, 10%, 25V, SM	407653-001	2
C13, 14	Cap, Cer, 0.01µF, 5%, 50V, SM	1182-103	2
C100-110, 112, 113	Cap, Cer, 0.1µF, 20%, 50V	404370-001	13
C111	Cap, Tant, 1µF, 10%, 16V, SM	403253-001	1
CR1, 2	Diode, Schottky, SM BAT54	401985-001	2
CR100	Diode, Schottky, Barrier, 1A, 40V, SM MBRS140T3	403187-001	1
CR101-103	Diode, SM MMAD4148	401980-001	3
DS1	Diode, Light-Emitting (Red/Green) LDGR 2340	402428-001	1
J1	Flex Circuit Assembly, NBP	404744-001	1
J2, 3, 4	PC Post	1778-604	6
Q1	Transistor, MOSFET, N-Channel, SM 25N05	407659-001	1
Q100-104	Transistor, NPN, SM T3904	2511-001	5
R1, 108, 111, 135, 136	Res, Cer, 1K, 1%, 1/8W, SM	1082-103	5
R2, 123	Res, Cer, 1M, 5%, 1/8W, SM	1081-105	2
R3	Res, Cer, 2.74K, 1%, 1/8W, SM	1082-823	1
R4	Res, Cer, 3.01K, 1%, 1/8W, SM	1082-821	1
R100	Res, 340Ω, 1%, 1/8W, SM	1082-790	1
R102, 114	Res, Cer, 49.9K, 1%, 1/8W, SM	1082-498	2
R103, 104, 106, 107, 109, 112, 113, 115, 118-120, 126	Res, Cer, 10K, 1%, 1/8W, SM	1082-104	12
R105, 121	Res, Cer, 10Ω, 1%, 1/8W, SM	1082-786	2
R110	Res, Cer, 6.34K, 1%, 1/8W, SM	1082-822	1
R116	Res, Cer, 4.99K, 10%, 1/4W, SM	1082-101	1
R117, 127	Res, Cer, 499K, 1%, 1/8W, SM	1082-499	2
R122, 128, 134, 139	Res, Cer, 100K, 1%, 1/8W, SM	1082-100	4
R124	Res, Cer, 2.00K, 10%, 1/4W, SM	1082-201	1
R125, 131	Res, Cer, 11.5K, 1%, 1/8W, SM	1082-815	2
R129, 132	Res, Cer, 51.1Ω, 10%, 1/4W, SM	1082-789	2
R133, 137	Res, Cer, 100Ω, 1%, 1/8W, SM	1082-755	2
R138	Res, Cer, 1M, 1%, 1/8W, SM	1082-828	1
U1	Res Ntwk, 10K	1061-103	1
U2	Sensor, Pressure, 7.3PSI, Compensated	404406-004	1
U3	FPGA, Programmed, NBP, PLCC	414521-001	1
U4	Volt Rgltr, Adj, TO220 LM2941CT	403609-001	1

Item	Parts List	Part Number	Qty
U102, 104	Volt Rgltr, Adj, SM LP2951A	3076-001	2
U100-103	Operation Ampl, SM LT1013	3137-013	3
Y1	Crystal, 4.194304MHz, SM	407658-001	1
-	Insert, Threaded, 4-40	404158-001	2
-	Nut, ESNA, 4-40	4521-304	1
-	Screw, PNH, Phillips, 4-40 x 5/16 (for U4)	4502-410	1
-	Screw, PNH, Phillips, 4-40 x 1/2 (for U2)	45000-408	2
-	Washer, Flat, SST, No 4 (for U2, 4)	4520-004	2
-	Circuit Board	800317-002A	1
-	Schematic Diagram	SD800316-002A	-

Schematic Diagram PN SD800316-002A

1 of 2

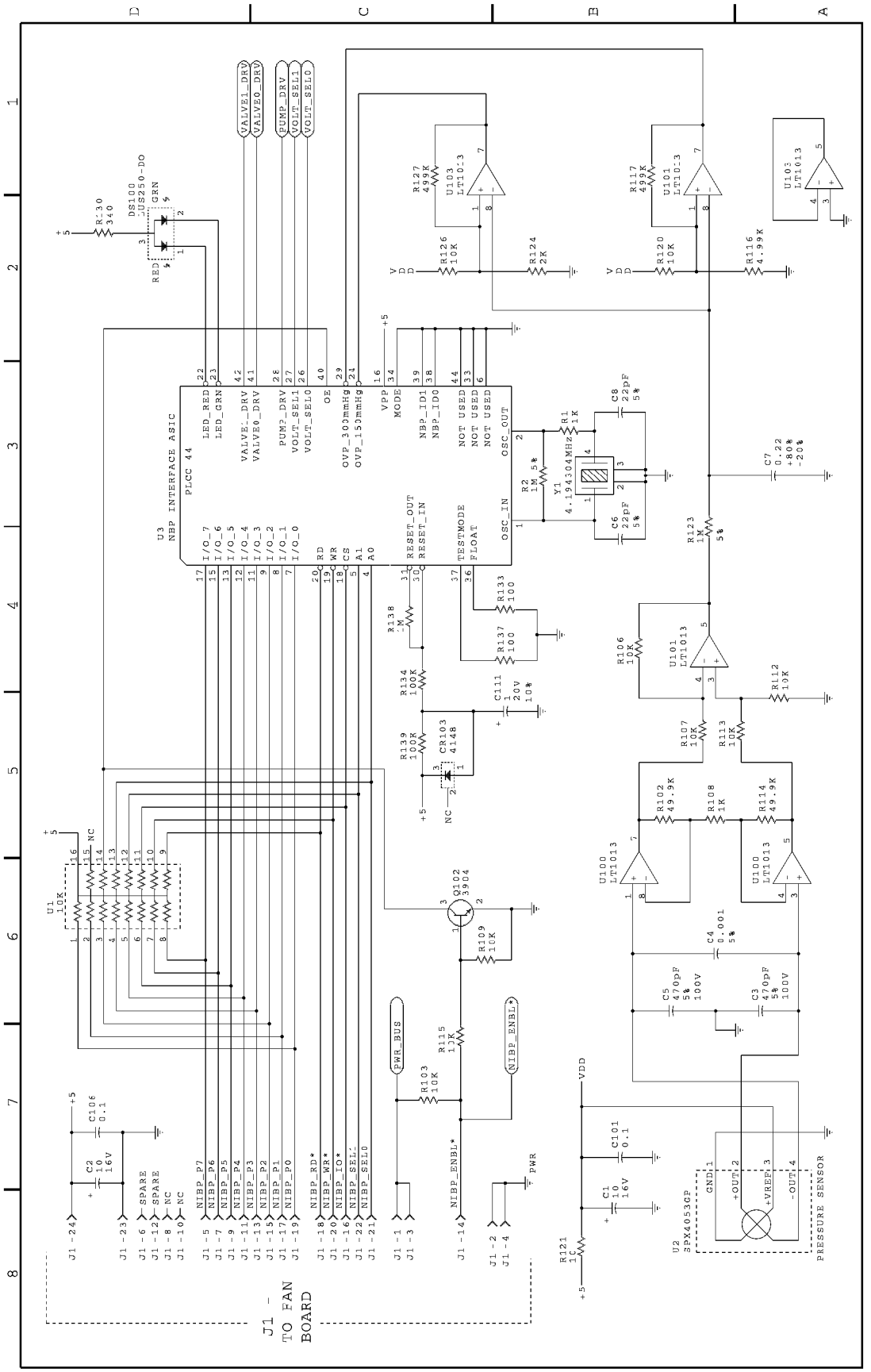

2 of 2

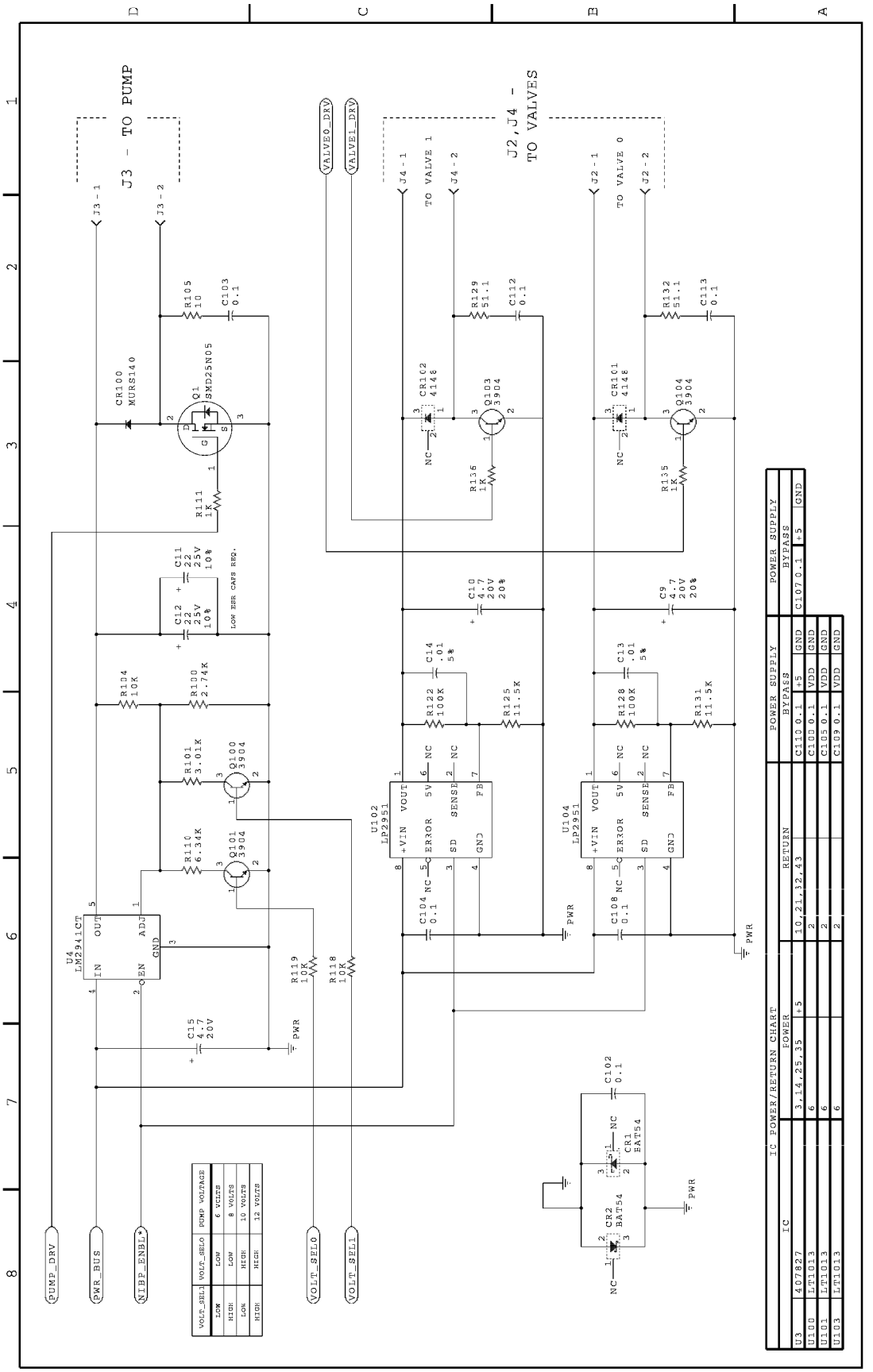
J3 - TO PUMP
J2,J4 - TO VALVES
TO VALVE 1
TO VALVE 0
VALVE0_DRV
VALVE1_DRV
PUMP_DRV
PWR_BUS
NBP_ENBL*
VOLT_SEL0
VOLT_SEL1
LOW ESR CAPS REQ.
U4 LM2941CT
U102 LP2951
U104 LP2951
Q1 SMD25N05
CR100 MUR5140
CR102 4148
CR101 4148
Q103 3904
Q104 3904
Q100 3904
Q101 3904
CR1 BAT54
CR2 BAT54
VOLT_SEL1 | VOLT_SEL0 | PUMP VOLTAGE
LOW | LOW | 6 VOLTS
HIGH | LOW | 8 VOLTS
LOW | HIGH | 10 VOLTS
HIGH | HIGH | 12 VOLTS
IC POWER/RETURN CHART
IC | POWER | RETURN | POWER SUPPLY BYPASS
U3 | 407827 | 3,14,25,35 | +5 | 10,21,32,43 | C110 0.1 | +5 | GND
U100 | LT1013 | 6 | 2 | C100 0.1 | VDD | GND
U101 | LT1013 | 6 | 2 | C105 0.1 | VDD | GND
U103 | LT1013 | 6 | 2 | C109 0.1 | VDD | GND
POWER SUPPLY BYPASS
C107 0.1 | +5 | GND

Parts Location Diagram PN 800316-001C

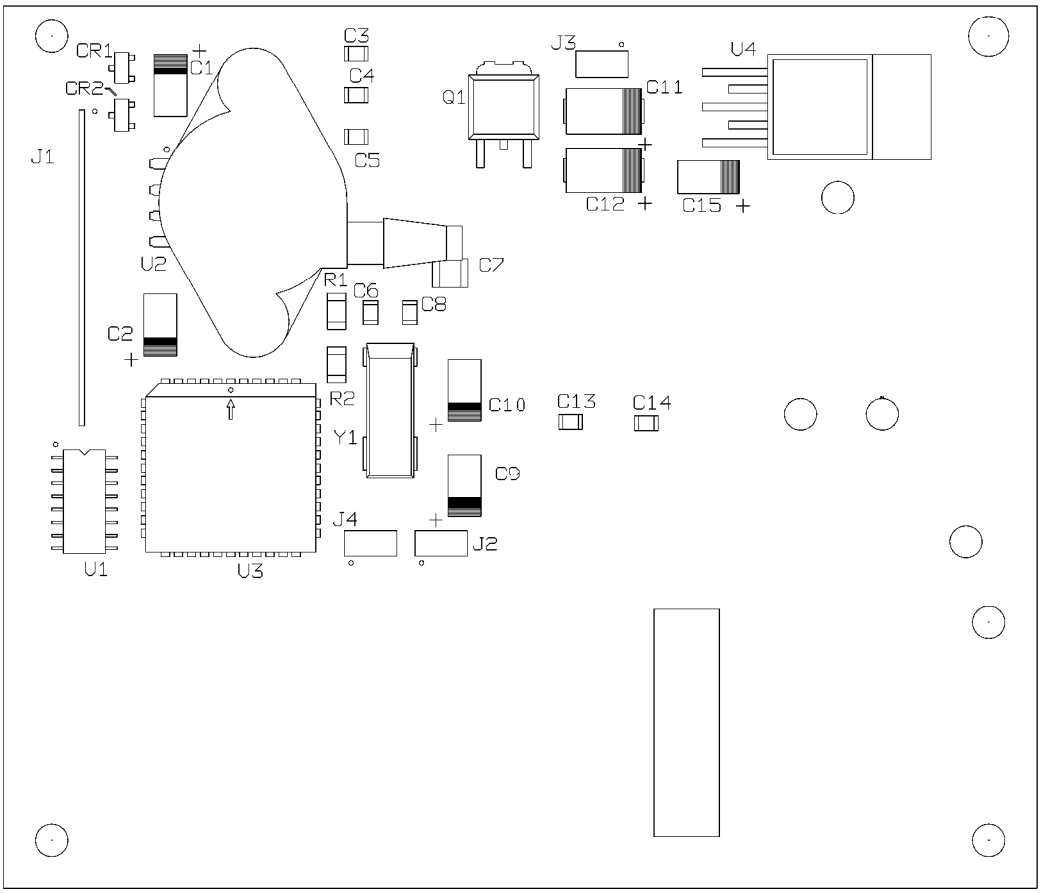

Parts List PN 800316-001C

Item	Parts List	Part Number	Qty
C1, 2	Cap, Tant, 1µF, 20%, 10V, SM	1176-106	2
C3, 5	Cap, Cer, 470pF, 5%, 50V, SM	1181-471	2
C4	Cap, Cer, 0.001µF, 5%, 50V, SM	1181-102	1
C6, 8	Cap, Cer, 22pF, 5%, 50V, SM	1181-220	2
C7	Cap, Cer, 0.22µF, 20%, 50V, SM	1187-224	1
C9, 10, 15	Cap, Tant, 4.7µF, 20%, 20V, SM	402004-001	3
C11, 12	Cap, Tant, 22µF, 10%, 25V, SM	407653-001	2
C13, 14	Cap, Cer, 0.01µF, 5%, 50V, SM	1182-103	2
C16 - 27	Cap, Cer, 0.1µF, 20%, 50V	404370-001	12
C28	Cap, Tant, 1µF, 10%, 16V, SM	403253-001	1
CR1, 2	Diode, Schottky, SM BAT54	401985-001	2
CR3	Diode, Schottky, Barrier, 1A, 40V, SM MBRS140T3	403187-001	1
CR4, 5, 6	Diode, SM MMAD4148	401980-001	3
DS1	Diode, Light-Emitting (Red/Green) LDGR 2340	402428-001	1
J1	Flex Circuit Assembly, NBP	404744-001	1
J2, 3, 4	PC Post	1778-604	6
Q1	Transistor, MOSFET, N-Channel, SM 25N05	407659-001	1
Q2 - 6	Transistor, NPN, SM T3904	2511-001	5
R1, 15, 26, 28, 30	Res, Cer, 1K, 1%, 1/8W, SM	1082-103	5
R2, 20	Res, Cer, 1M, 5%, 1/8W, SM	1081-105	2
R3	Res, Cer, 2.74K, 1%, 1/8W, SM	1082-823	1
R4	Res, Cer, 3.01K, 1%, 1/8W, SM	1082-821	1
R5, 7, 9, 16, 17, 19, 23, 24, 31, 32, 33	Res, Cer, 10K, 1%, 1/8W, SM	1082-104	11
R6	Res, 340Ω, 1%, 1/8W, SM	1082-790	1
R8	Res, Cer, 6.34K, 1%, 1/8W, SM	1082-822	1
R10, 12, 37, 39	Res, Cer, 100K, 1%, 1/8W, SM	1082-100	4
R11, 13	Res, Cer, 11.5K, 1%, 1/8W, SM	1082-815	2
R14, 36	Res, Cer, 10Ω, 1%, 1/8W, SM	1082-786	2
R18	Res, Cer, 5.36K, 1%, 1/8W, SM	1082-785	1
R21, 22	Res, Cer, 51.1Ω, 10%, 1/4W, SM	1082-789	2
R25	Res, Cer, 499K, 1%, 1/8W, SM	1082-499	1
R27, 29	Res, Cer, 49.9K, 1%, 1/8W, SM	1082-498	2
R34, 35	Res, Cer, 100Ω, 1%, 1/8W, SM	1082-755	2
R38	Res, Cer, 1M, 1%, 1/8W, SM	1082-828	1
U1	Res Ntwk, 10K	1061-103	1
U2	Sensor, Pressure, 7.3PSI, Compensated	404406-004	1
U3	FPGA, Programmed, NBP, PLCC	407827-001	1
U4	Volt Rgltr, Adj, TO220 LM2941CT	403609-001	1
U5, 6	Volt Rgltr, Adj, SM LP2951A	3076-001	2
U7, 8	Operation Ampl, SM LT1013	3137-013	2

Item	Parts List	Part Number	Qty
Y1	Crystal, 4.194304MHz, SM	407658-001	1
-	Insert, Threaded, 4-40	404158-001	3
-	Screw, PNH, Phillips, 4-40 x 1/4 (for U4)	45000-404	1
-	Screw, PNH, Phillips, 4-40 x 1/2 (for U2)	45000-408	2
-	Washer, Flat, SST, No 4 (for U2, 4)	4520-004	3
-	Circuit Board	800317-001C	1
-	Schematic Diagram	SD800316-001C	-

Schematic Diagram PN SD800316-001C

1 of 2

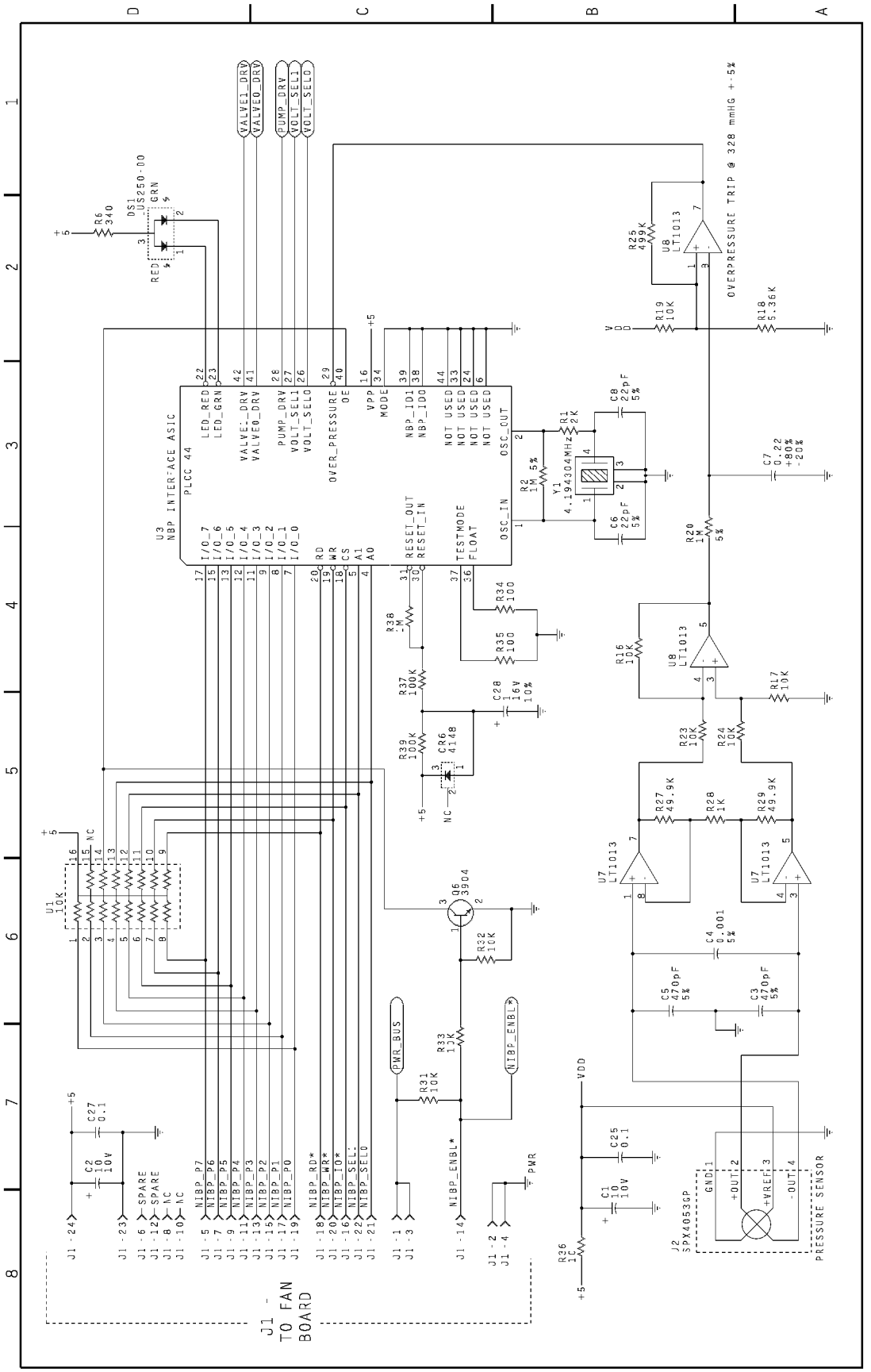

2 of 2

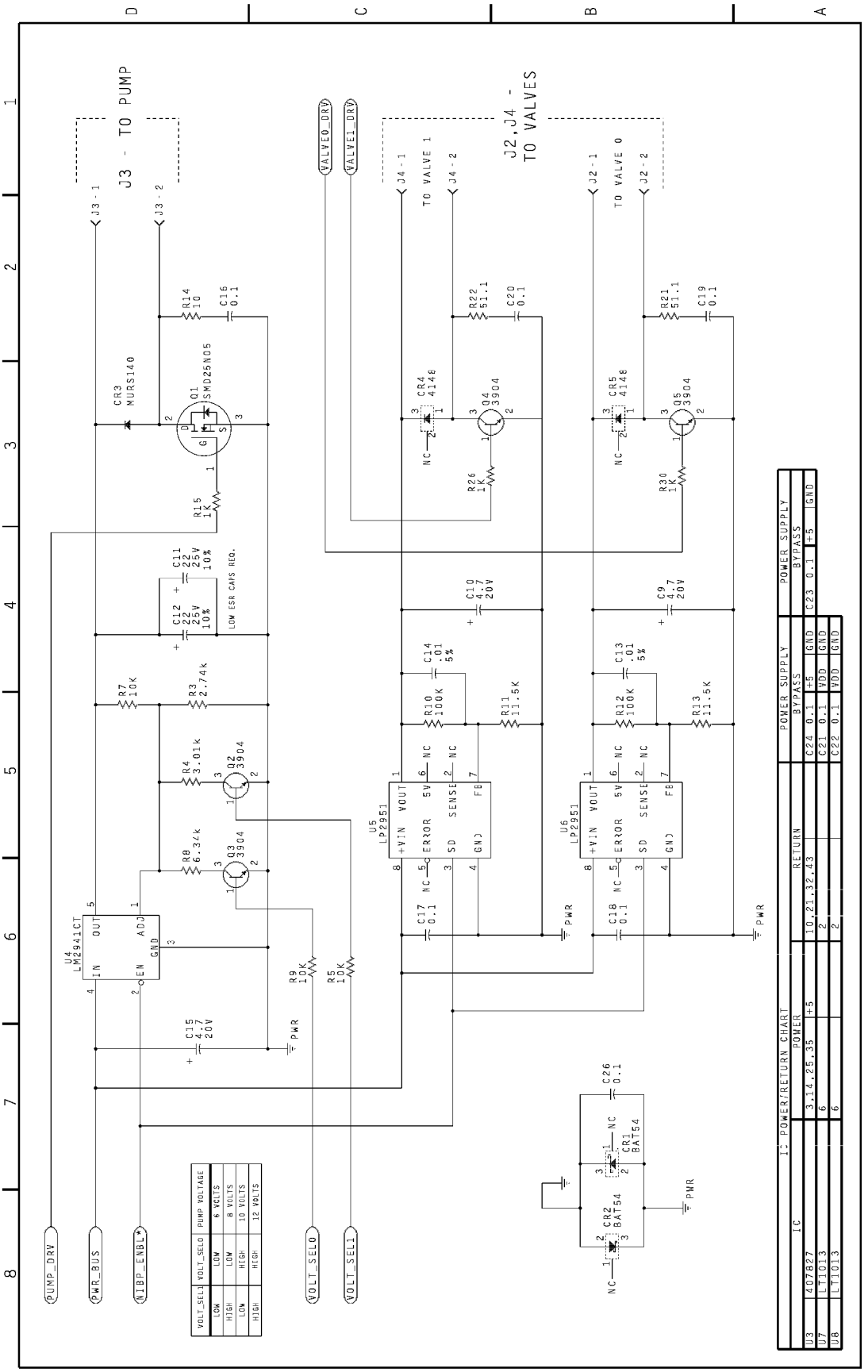
J3 - TO PUMP
J2,J4 - TO VALVES
TO VALVE 1
TO VALVE 0
LOW ESR CAPS REQ.
PUMP_DRV
PWR_BUS
NIBP_ENBL*
VOLT_SEL0
VOLT_SEL1
VALVE0_DRV
VALVE1_DRV
U4 LM2941CT
U5 LP2951
U6 LP2951
Q1 SMD25N05
CR3 MUR5140
CR4 4148
CR5 4148
CR1 BAT54
CR2 BAT54
Q2 3904
Q3 3904
Q4 3904
Q5 3904
PWR
VOLT_SEL1 | VOLT_SEL0 | PUMP VOLTAGE
LOW | LOW | 6 VOLTS
HIGH | LOW | 8 VOLTS
LOW | HIGH | 10 VOLTS
HIGH | HIGH | 12 VOLTS
IC POWER/RETURN CHART
POWER SUPPLY BYPASS
U3 407827 3,14,25,35 +5 10,21,32,43 C24 0.1 +5 GND C23 0.1 +5 GND
U7 LT1013 6 2 C21 0.1 VDD GND
U8 LT1013 6 2 C22 0.1 VDD GND

For your notes

29 ACQUISITION PROCESSOR PCB PN 801040/800330

General **29-2**

Parts Location Diagram PN 801040-001A/002A **29-3**

Parts List PN 801040-001A/002A **29-5**

Schematic Diagram PN SD801040-001A **29-7**

Assembly Configurations PN800330 ..... **29-19**

Parts Location Diagram PN 800330B **29-20**

Parts List PN 800330B **29-22**

Schematic Diagram PN SD800330-001B **29-24**

General

There are many different versions of the acquisition processor PCB:

- pn 800330-0XX, were used first in all Tram modules; and
- pn 801040-001, was introduced in the SL-series modules for all 10-leadwire configurations; and
- pn 801040-002, was introduced in the A-series modules for Tram 800A/850A 5-leadwire configurations.

NOTE
You may replace any Tram 800A/850A 5-lead version of the pn 800330 board with a pn 801040-002 board and any 10-lead version of the pn 800330 board with a pn 801040-001 board.

Parts Location Diagram PN 801040-001A/002A

1 of 2

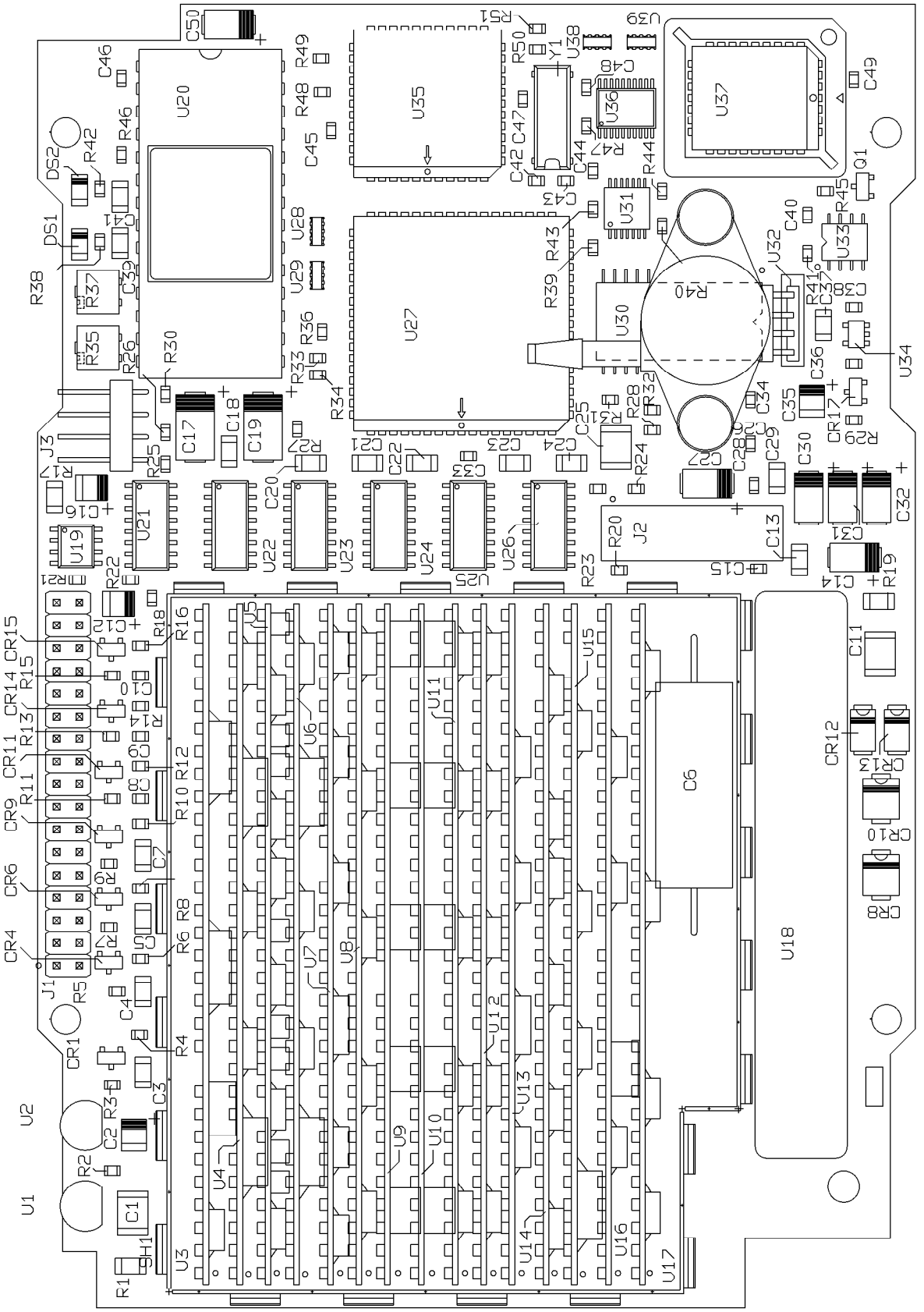

2 of 2

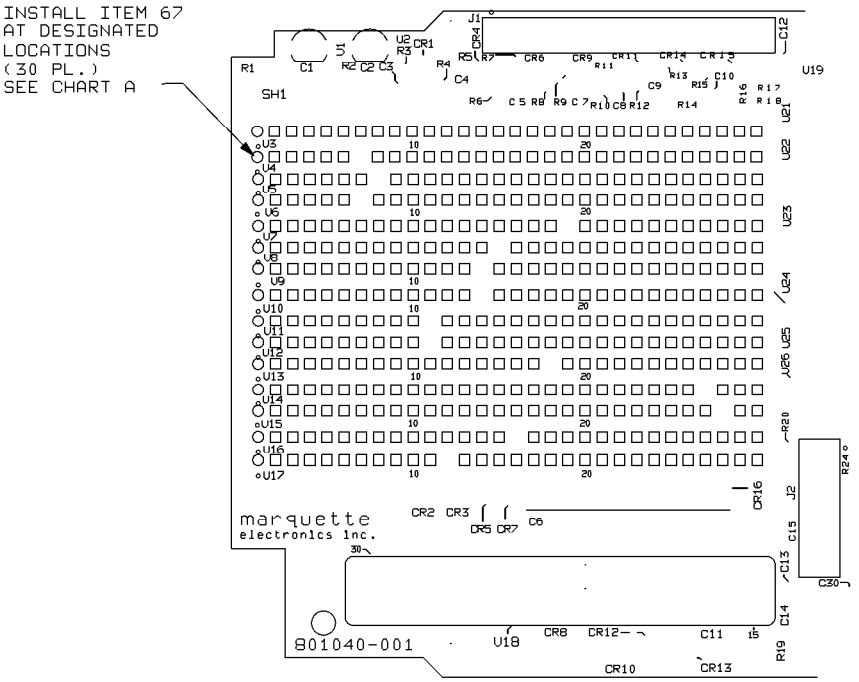

CHART A	
U3	5,30
U4	1,28
U5	1,27
U6	1,28
U7	11,30
U8	2,30
U9	1,29
U10	1,29
U11	1,29
U12	1,29
U13	7,30
U14	15,26
U15	12,26
U16	14,29
U17	3,27

SOCKET PIN LOCATIONS

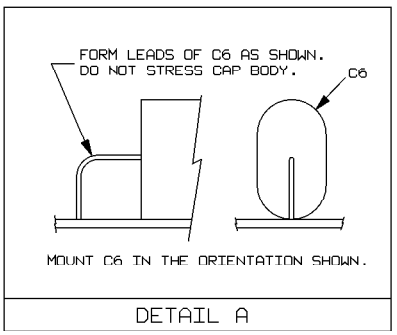

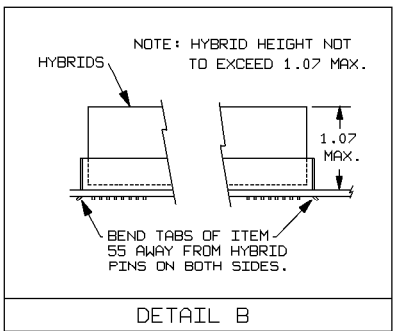

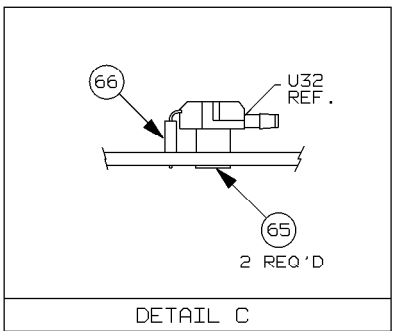

Parts List PN 801040-001A/002A

Item	Parts List	Part Number	Qty
C1, 11, 25	Cap, Cer, 0.47µF, 20%	1187-474	3
C2, 35	Cap, Tant, 1.0µF, 10%, 35V, SM	403907-001	2
C3-5, 7, 13, 18, 2024, 29, 37, 39, 41	Cap, Cer, 0.1µF, 20%, 50V	404370-001	15
C6	Cap, MPE, 10µF, 5%, 35V	1215-106	1
C8-10, 15, 26, 28, 33, 34, 36, 40, 44, 45-49	Cap, Cer, 0.1µF, 5%, 16V	411575-002	16
C12, 16	Cap, Tant, 3.3µF, 10%, 20V, SM	416798-001	2
C14, 27, 30, 50	Cap, Tant, 10µF, 20%, 16V, SM	1176-106	4
C17, 19	Cap, Tant, 10µF, 20%, 25V, SM	1152-106	1
C31, 32	Cap, Tant, 4.7µF, 20%, 20V, SM	402004-001	2
C38	Cap, Cer, 1000pF, 5%, 50V, SM	411575-003	1
C42, 43	Cap, NPO, 22pF, 5%, 50V, SM	411576-002	2
CR1, 4, 6, 9, 11, 14, 15	Diode Pair, Series, SM D7000	2013-201	7
CR8, 10	Transorb, 15V, 5%, 600W SM6T15A	403188-001	2
CR12, 13	Diode, Rectifier, 1A, 100V, SM MURS110T3	403190-001	2
CR17	Diode, SM MMAD4148	401980-001	1
DS1, 2	Light-Emitting Diode, Red, SM 1206	414417-002	2
J1	Connector, PC Header, 34-Pin, Vertical	1778-234	1
J2	Connector, Vertical, 16-Pin	1847-016	1
J3	PC Post, Right Angle	1778-436	4
Q1	Transistor, PNP, SM T3906	2511-101	1
R1	Res, Cer, 243K, 1%, 1/8W, SM	1082-798	1
R17	Res, Cer, 2K, 1%, 1/8W, SM	1082-201	1
R19	Res, Cer, 499K, 1%, 1/8W, SM	1082-499	1
R2, 21	Res, Cer, 100Ω, 1%, 1/16W, SM	410334-003	2
R3, 5, 7, 9, 11, 13, 15, 18, 22, 27, 31, 34, 38, 41, 42, 47	Res, Cer, 1K, 1%, 1/16W, SM	410334-008	16
R4, 6, 8, 10, 12, 14, 16, 25, 28, 32, 45, 46	Res, Cer, 11.5K, 1%, 1/16W, SM	410334-014	12
R20, 23, 24, 26	Res, Cer, 150Ω, 1%, 1/16W, SM	410334-028	4
R29, 30	Res, Cer, 45.7K, 1%, 1/16W, SM	410334-036	2
R33, 36, 39, 43, 48, 49	Res, Cer, 22.1 Ω, 1%, 1/16W, SM	410334-033	6
R35, 37	Res, Var, 100Ω, 11-Turn	416248-001	2
R40, 44, 50, 51	Res, Cer, 47.5Ω, 1%, 1/16W, SM	410334-026	4
SH1	Shield, Fence	416402-001	1
U1	Sensor, Temperature, TO92 LM35CZ	403396-001	1
U2	Volt Rgltr, +5V, 0.5%, 100mA, TO92 LP2950	402581-001	1
U3	Hybrid, NBP	404303-001	1
U4, 5	Hybrid, Dual Invasive BP Amplifier	400867-001	2

Item	Parts List	Part Number	Qty
U5	Hybrid, Quad Invasive BP Driver (For -001 Only)	401607-001	1
U7	Hybrid, TEMP, Channel 2	402100-004	1
U8	Hybrid, TEMP, Channel 1	401788-004	1
U9, 10	Hybrid, ECG Final Amplifier	401787-001	2
U11, 12	Hybrid, ECG Pacemaker Rejection (For -001 Only)	401786-001	2
U12	Hybrid, ECG Pacemaker Rejection (For -002 Only)	401786-001	1
U13	Hybrid, Pace Detect	800982-001	1
U14	Hybrid, ECG Preamplifier II (For -001 Only)	401790-001	1
U15	Hybrid, ECG Preamplifier	400869-004	1
U16	Hybrid, RESP Carrier	400870-001	1
U17	Hybrid, RESP Demodulator (For -001 Only)	400871-004	1
U18	ECG Defib Protection, 10-Lead (For -001 Only)	414639-002	1
U18	ECG Defib Protection, 5-Lead (For -002 Only)	414639-001	1
U19	Operational Ampl, JFET, SM LT1055	402396-001	1
U20	ADC, 12-Bit, Custom	405548-001	1
U21-26	Analog Multiplexer, 4-Channel, Dual, SM DG408DY/ 508DY	402024-001	6
U27	PAL, Programmed, Communication Control, PLCC 80C152JB	400368-001	1
U28, 29, 38, 39	Res Ntwk, 22 Ω, SM	415601-001	4
U30	RAM, Static, 32K x 8-Bit , SM 62256FLP	3202-256	1
U31	AND Gate, 2-Input, Quad, SM VHC08	3057-008	1
U32	Sensor, Pressure, 7.3 PSI	40446-003	1
U33	EEPROM, Serial, 64 x 16-Bit, SM 93C46	406286-001	1
U34	Inverter, Schmitt Trigger, CMOS, SM TC7S14	416170-001	1
U35	EPLD, Programmed, Acquisition Processor, PLCC	416957-001	1
U36	Latch, Type D, Octal VHC573	3057-573	1
U37	EPROM, Programmed, Acquisition Processor Boot Code, PLCC	404905-001	1
Y1	Crystal, 14.7456-MHz, SM	414847-002	1
–	Socket, PLCC, 32-Pin, SM (for)	403802-001	1
–	Spacer, Round, 6-32 x 1/4 (For U32)	4663-604	2
–	Socket, 4-Pin	413139-001	1
–	Socket, Mini (For U3-17)	1818-201	30
–	Shield, Cover	416402-002	1
–	Circuit Board	801041-001A	1
–	Schematic Diagram	SD801040-001A	–

Schematic Diagram PN SD801040-001A

1 of 11

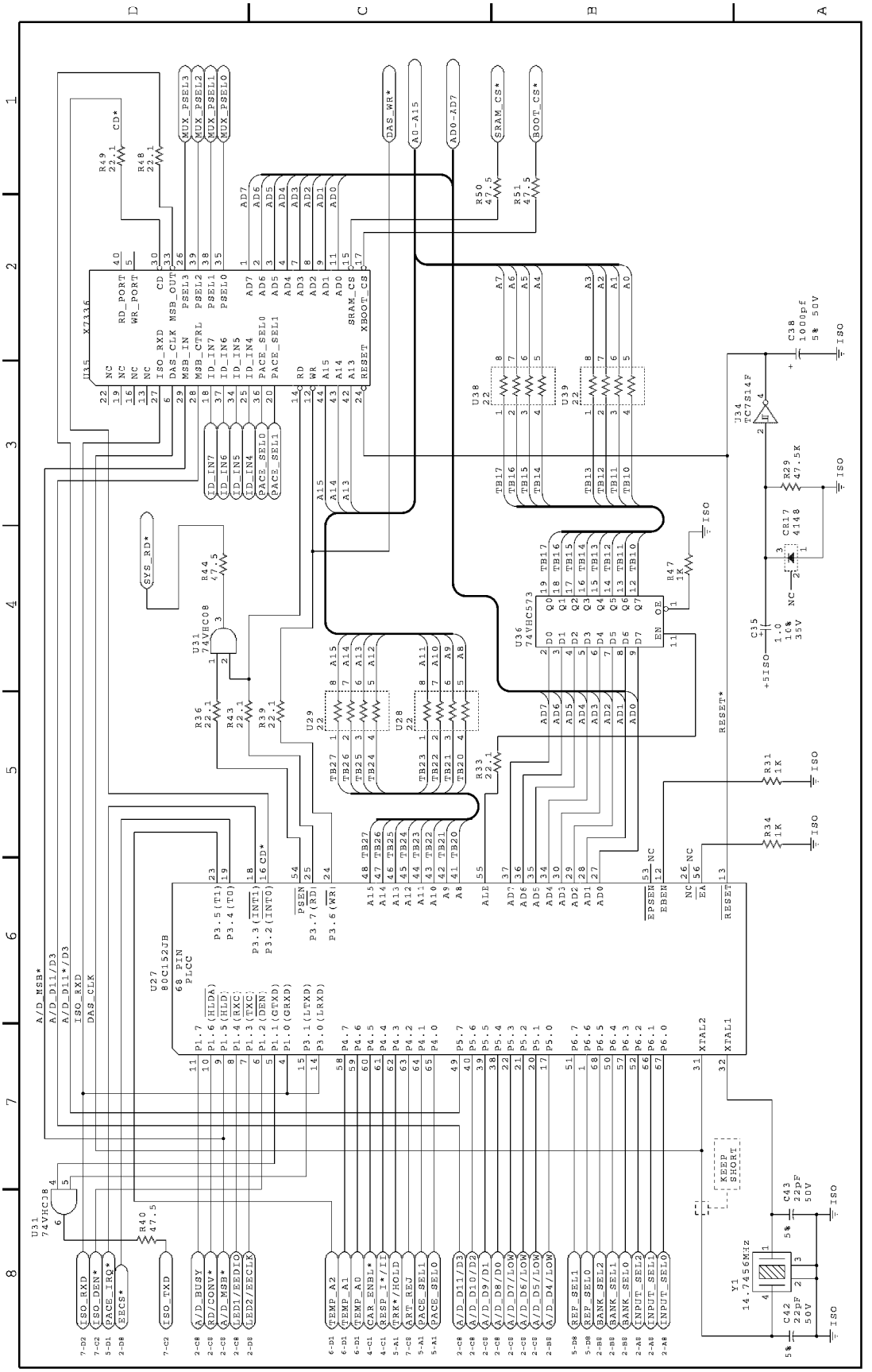

2 of 12

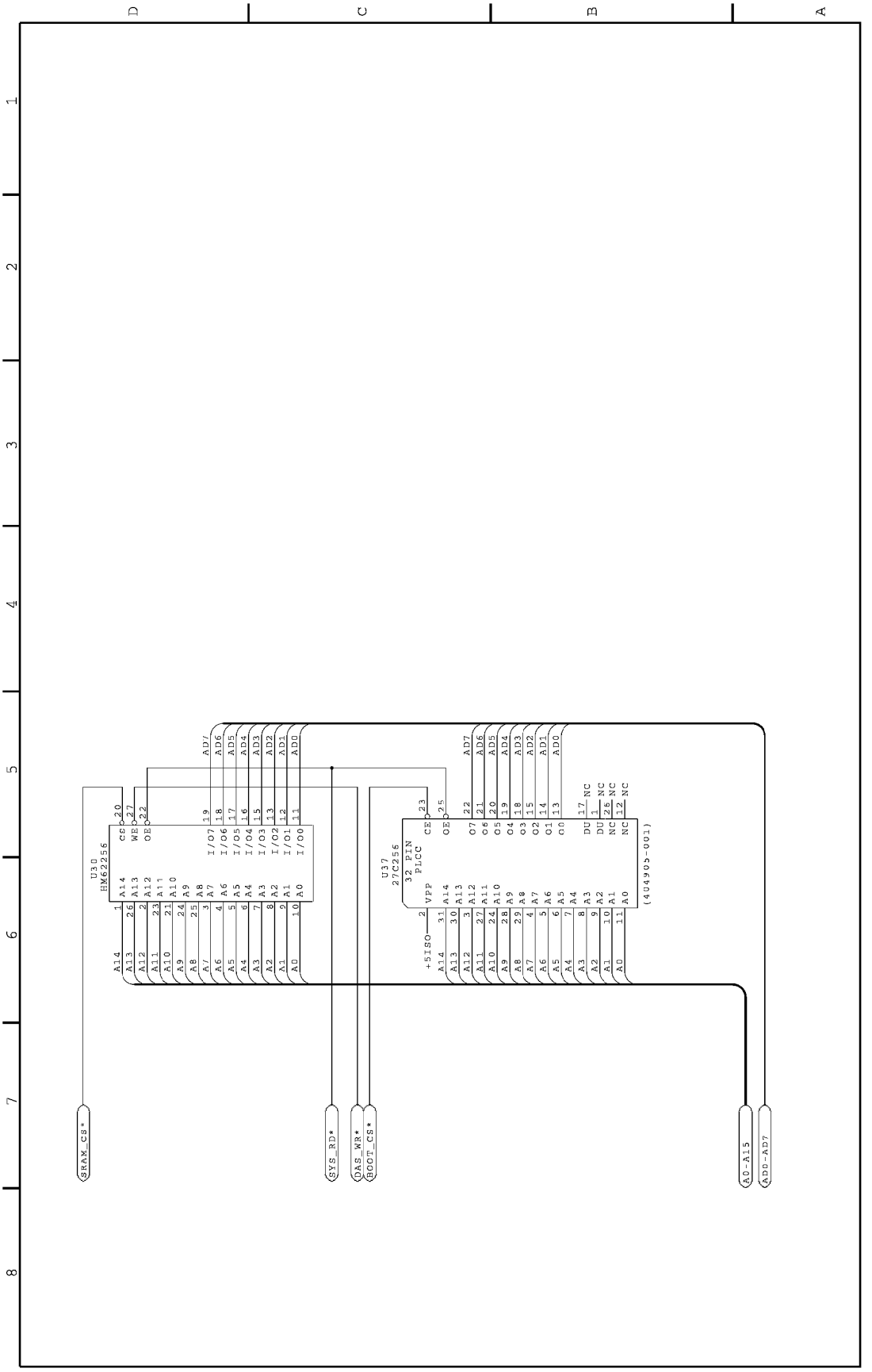
U30
HM62256
U37
27C256
32 PIN
PLCC
(404905-001)
+5ISO
RAM_CS*
SYS_RD*
DAS_WR*
BOOT_CS*
A0-A15
AD0-AD7

3 of 12

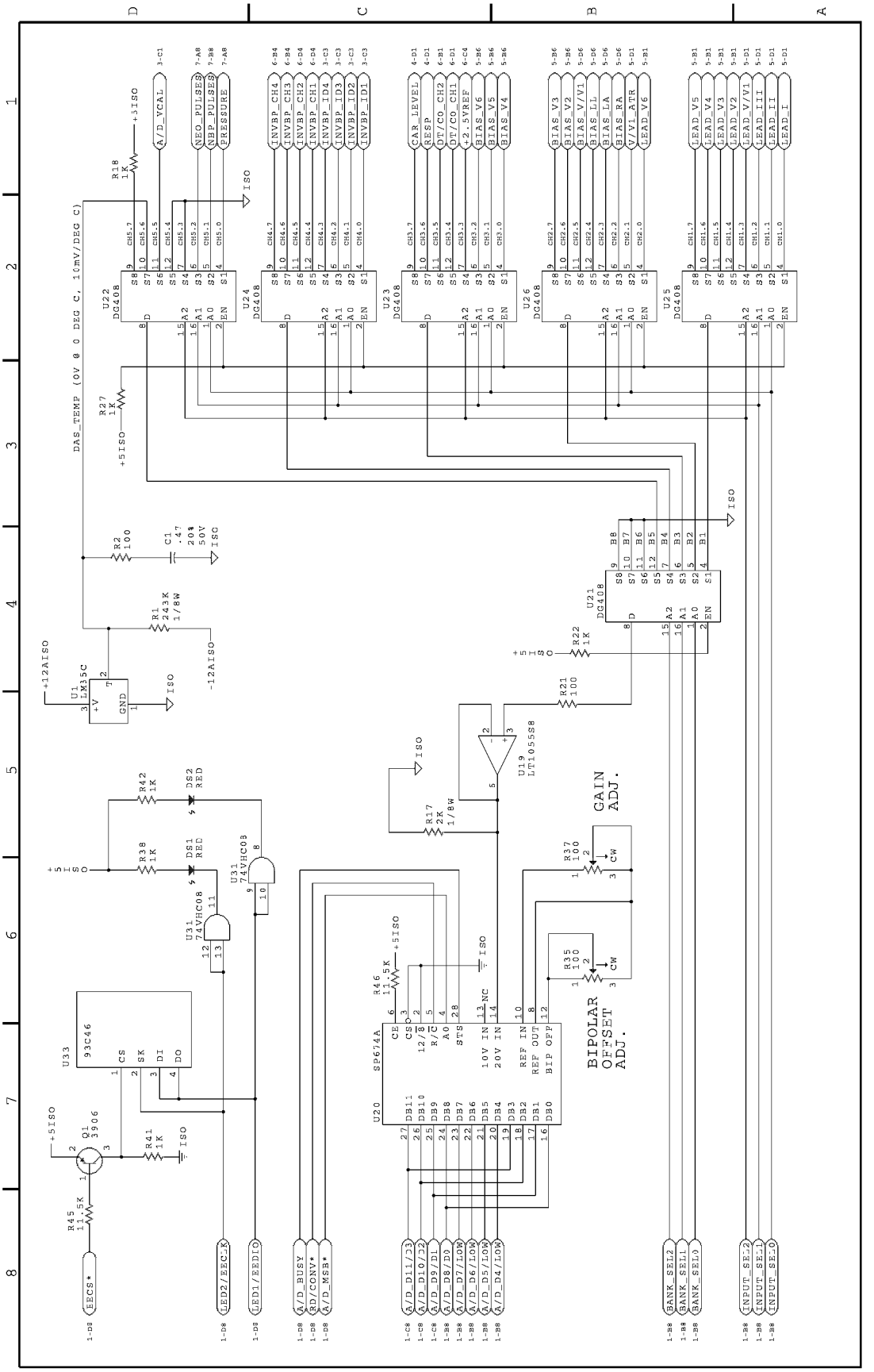
U22 DG408
U23 DG408
U24 DG408
U25 DG408
U26 DG408
U21 DG408
U20 SP674A
U33 93C46
U19 LT1055S8
U1 LM35C
Q1 3906
U31 74VHC08
U31 74VHC03
DS1 RED
DS2 RED
R18 1K
R27 1K
R2 100
C1 .47 20% 50V
R1 243K 1/8W
R22 1K
R21 100
R17 2K 1/8W
R42 1K
R38 1K
R41 1K
R45 11.5K
R46 11.5K
R37 100
R35 100
GAIN ADJ.
BIPOLAR OFFSET ADJ.
DAS_TEMP (0V @ 0 DEG C, 10mV/DEG C)
+3ISO
+5ISO
+12AISO
-12AISO
ISO
A/D_VCAL
NEO_PULSES
NBP_PULSES
PRESSURE
INVBP_CH4
INVBP_CH3
INVBP_CH2
INVBP_CH1
INVBP_ID4
INVBP_ID3
INVBP_ID2
INVBP_ID1
CAR_LEVEL
RESP
DT/CO_CH2
DT/CO_CH1
+2.5VREF
BIAS_V6
BIAS_V5
BIAS_V4
BIAS_V3
BIAS_V2
BIAS_V/V1
BIAS_LL
BIAS_LA
BIAS_RA
V/V1_ATR
LEAD_V6
LEAD_V5
LEAD_V4
LEAD_V3
LEAD_V2
LEAD_V/V1
LEAD_III
LEAD_II
LEAD_I
EECS*
LED2/EEC_K
LED1/EEDIO
A/D_BUSY
RD/CONV*
A/D_MSB*
A/D_D11/D3
A/D_D10/D2
A/D_D9/D1
A/D_D8/D0
A/D_D7/LOW
A/D_D6/LOW
A/D_D5/LOW
A/D_D4/LOW
BANK_SEL2
BANK_SEL1
BANK_SEL0
INPUT_SEL2
INPUT_SEL1
INPUT_SEL0

4 of 12

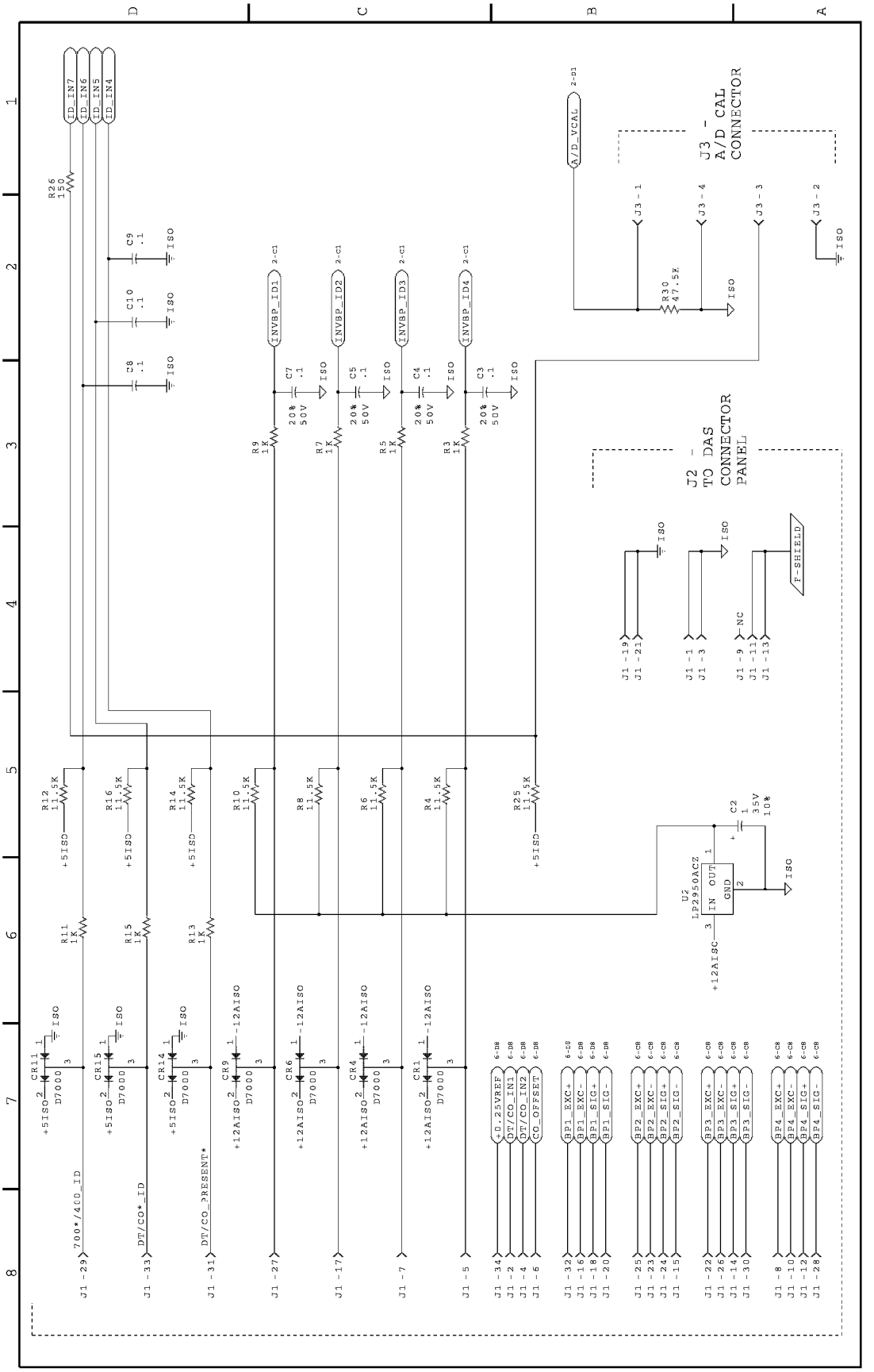
J3 - A/D CAL CONNECTOR
J2 - TO DAS CONNECTOR PANEL
ID_IN7
ID_IN6
ID_IN5
ID_IN4
A/D_VCAL
INVBP_ID1
INVBP_ID2
INVBP_ID3
INVBP_ID4
F_SHIELD
U2 LP2950ACZ
IN OUT GND
700*/400_ID
DT/CO*_ID
DT/CO_PRESENT*
+0.25VREF
DT/CO_IN1
DT/CO_IN2
CO_OFFSET
BP1_EXC+
BP1_EXC-
BP1_SIG+
BP1_SIG-
BP2_EXC+
BP2_EXC-
BP2_SIG+
BP2_SIG-
BP3_EXC+
BP3_EXC-
BP3_SIG+
BP3_SIG-
BP4_EXC+
BP4_EXC-
BP4_SIG+
BP4_SIG-

5 of 12

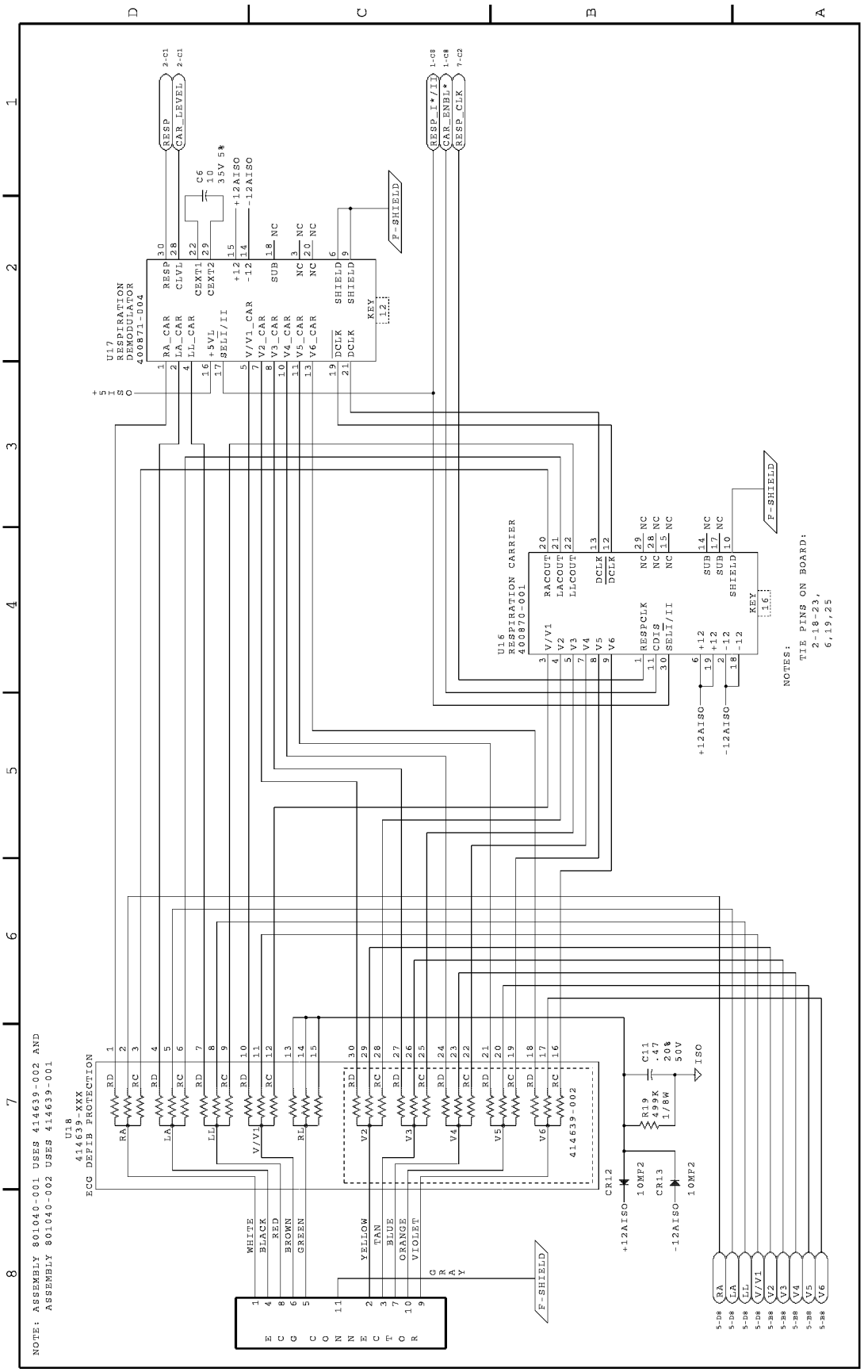
NOTE: ASSEMBLY 801040-001 USES 414639-002 AND
ASSEMBLY 801040-002 USES 414639-001
U17
RESPIRATION
DEMODULATOR
400871-004
U16
RESPIRATION CARRIER
400870-001
U18
414639-XXX
ECG DEFIB PROTECTION
414639-002
P-SHIELD
NOTES:
TIE PINS ON BOARD:
2-18-23,
6,19,25
WHITE
BLACK
RED
BROWN
GREEN
YELLOW
TAN
BLUE
ORANGE
VIOLET
GRAY
CONNECTOR

6 of 12

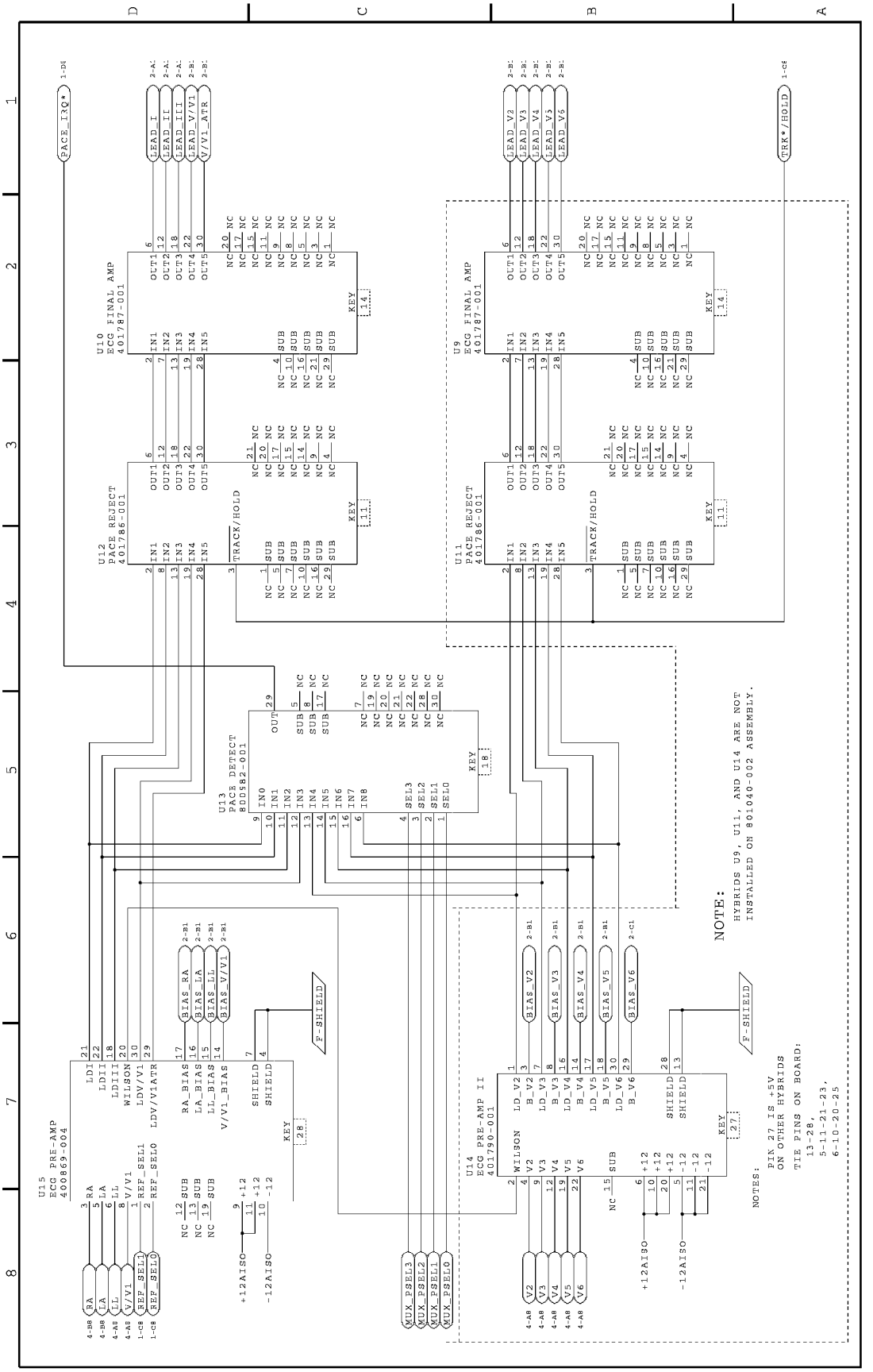
U10
ECG FINAL AMP
401787-001
U9
ECG FINAL AMP
401787-001
U12
PACE REJECT
401786-001
U11
PACE REJECT
401786-001
U13
PACE DETECT
800582-001
U15
ECG PRE-AMP
400869-004
U14
ECG PRE-AMP II
401790-001
PACE_IRQ*
TRK*/HOLD
LEAD_I
LEAD_II
LEAD_III
LEAD_V/V1
V/V1_ATR
LEAD_V2
LEAD_V3
LEAD_V4
LEAD_V5
LEAD_V6
BIAS_RA
BIAS_LA
BIAS_LL
BIAS_V/V1
BIAS_V2
BIAS_V3
BIAS_V4
BIAS_V5
BIAS_V6
F-SHIELD
MUX_PSEL3
MUX_PSEL2
MUX_PSEL1
MUX_PSEL0
+12AISO
-12AISO
NOTE:
HYBRIDS U9, U11, AND U14 ARE NOT
INSTALLED ON 801040-002 ASSEMBLY.
NOTES:
PIN 27 IS +5V
ON OTHER HYBRIDS
TIE PINS ON BOARD:
13-28,
5-11-21-23,
6-10-20-25

7 of 12

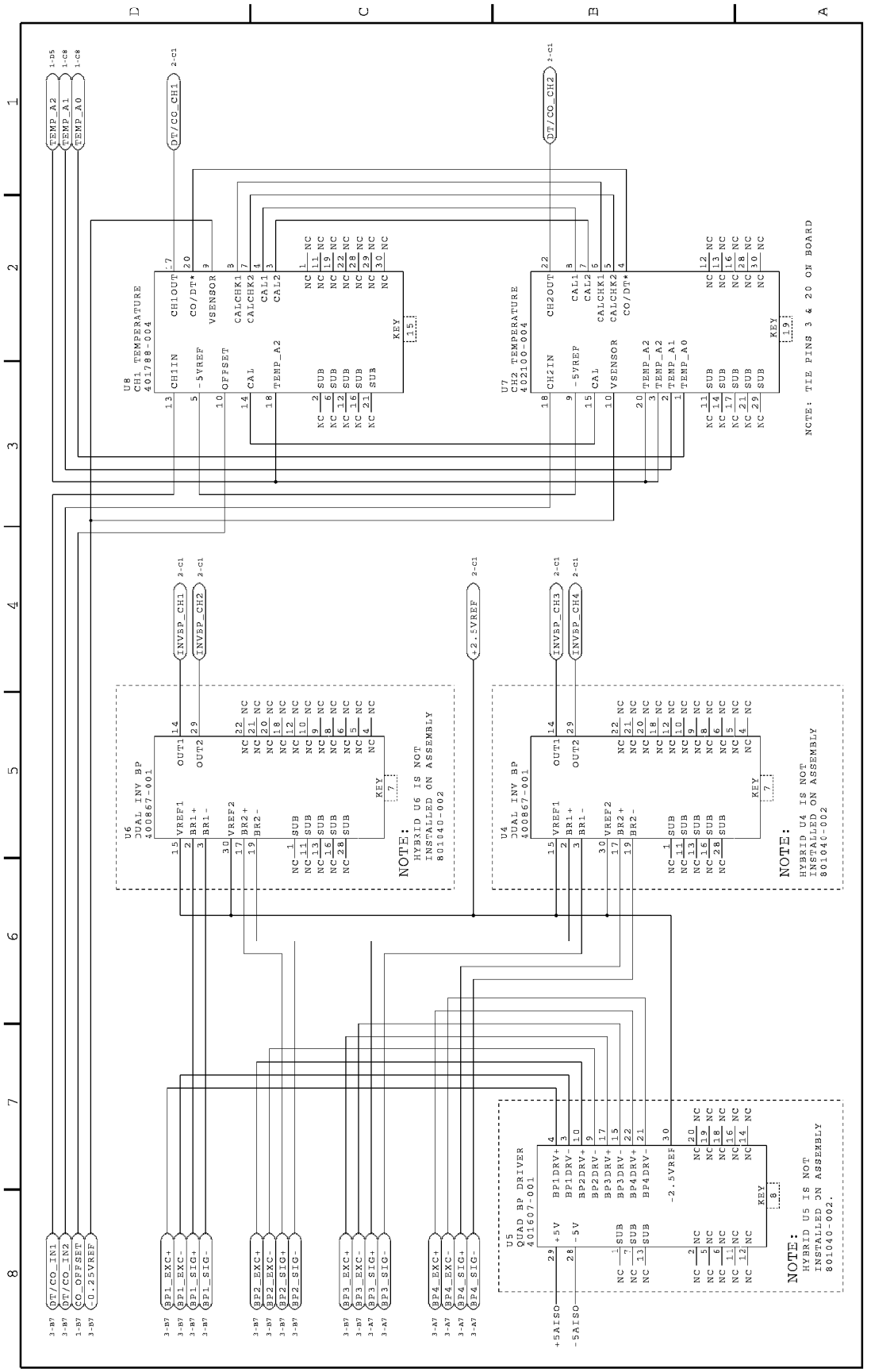
U8
CH1 TEMPERATURE
401788-004
U7
CH2 TEMPERATURE
402100-004
U6
DUAL INV BP
400867-001
U4
DUAL INV BP
400867-001
U5
QUAD BP DRIVER
401607-001
NOTE: HYBRID U6 IS NOT INSTALLED ON ASSEMBLY 801040-002
NOTE: HYBRID U4 IS NOT INSTALLED ON ASSEMBLY 801040-002
NOTE: HYBRID U5 IS NOT INSTALLED ON ASSEMBLY 801040-002.
NOTE: TIE PINS 3 & 20 ON BOARD
TEMP_A2
TEMP_A1
TEMP_A0
DT/CO_CH1
DT/CO_CH2
INVBP_CH1
INVBP_CH2
INVBP_CH3
INVBP_CH4
-2.5VREF
DT/CO_IN1
DT/CO_IN2
CO_OFFSET
-0.25VREF
BP1_EXC+
BP1_EXC-
BP1_SIG+
BP1_SIG-
BP2_EXC+
BP2_EXC-
BP2_SIG+
BP2_SIG-
BP3_EXC+
BP3_EXC-
BP3_SIG+
BP3_SIG-
BP4_EXC+
BP4_EXC-
BP4_SIG+
BP4_SIG-
+5ALSO
-5ALSO

8 of 12

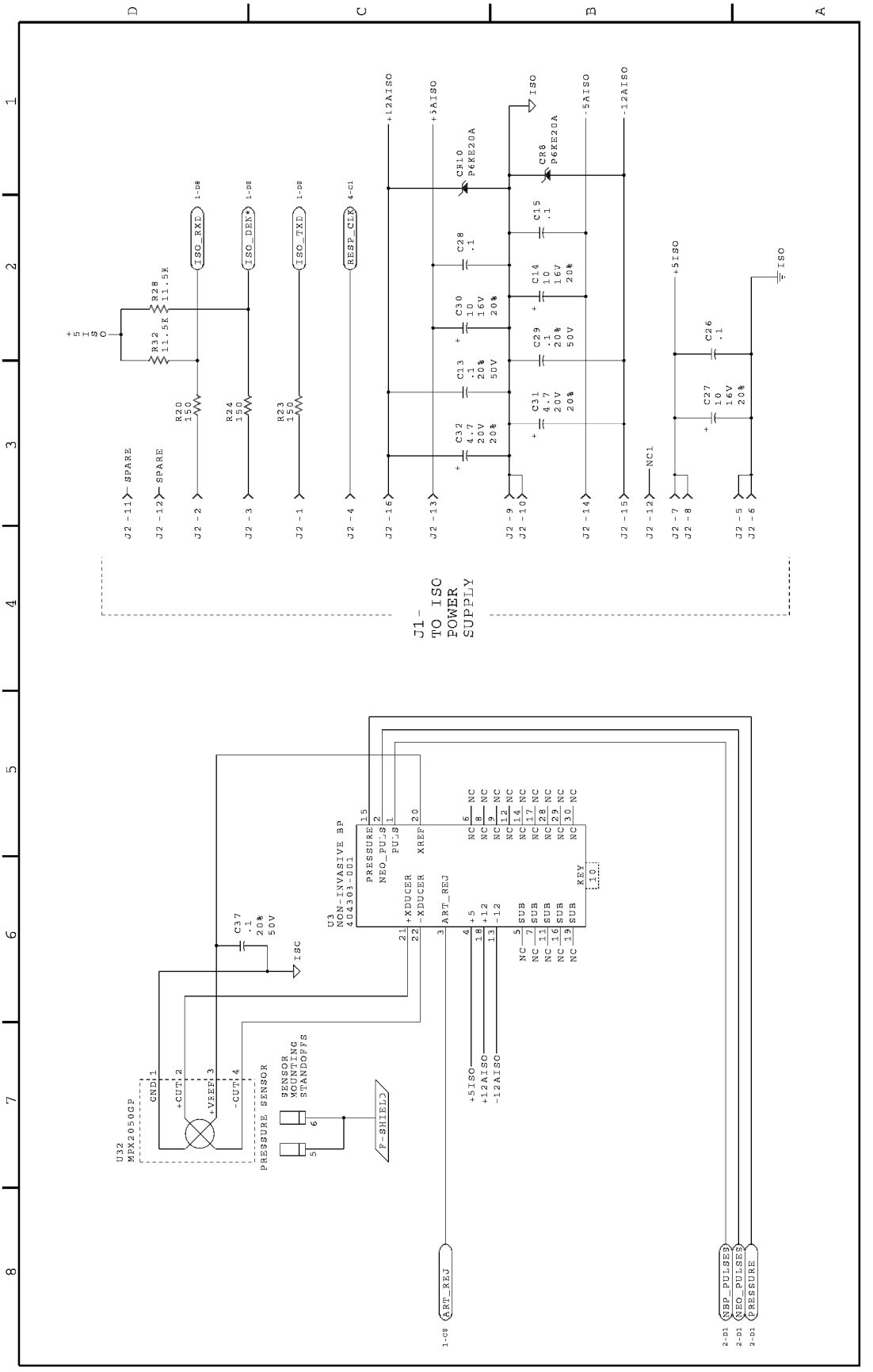
J1-
TO ISO
POWER
SUPPLY
U3
NON-INVASIVE BP
404403-001
U32
MPX2050GP
PRESSURE SENSOR
SENSOR
MOUNTING
STANDOFFS
F-SHIELD
ISO_RXD
ISO_DEN*
ISO_TXD
RESP_CLK
ART_REJ
NBP_PULSES
NEO_PULSES
PRESSURE
SPARE
NC1
+12AISO
+3AISO
-5AISO
-12AISO
+5ISO
ISO
ISC
+5ISO
+12AISO
-12AISO
CR10
P6KE20A
CR8
P6KE20A
R28
11.5K
R32
11.5K
R20
150
R24
150
R23
150
C37
.1
20%
50V
C32
4.7
20V
20%
C13
.1
20%
50V
C30
10
16V
20%
C28
.1
C31
4.7
20V
20%
C29
.1
20%
50V
C14
10
16V
20%
C15
.1
C27
10
16V
20%
C26
.1

9 of 12

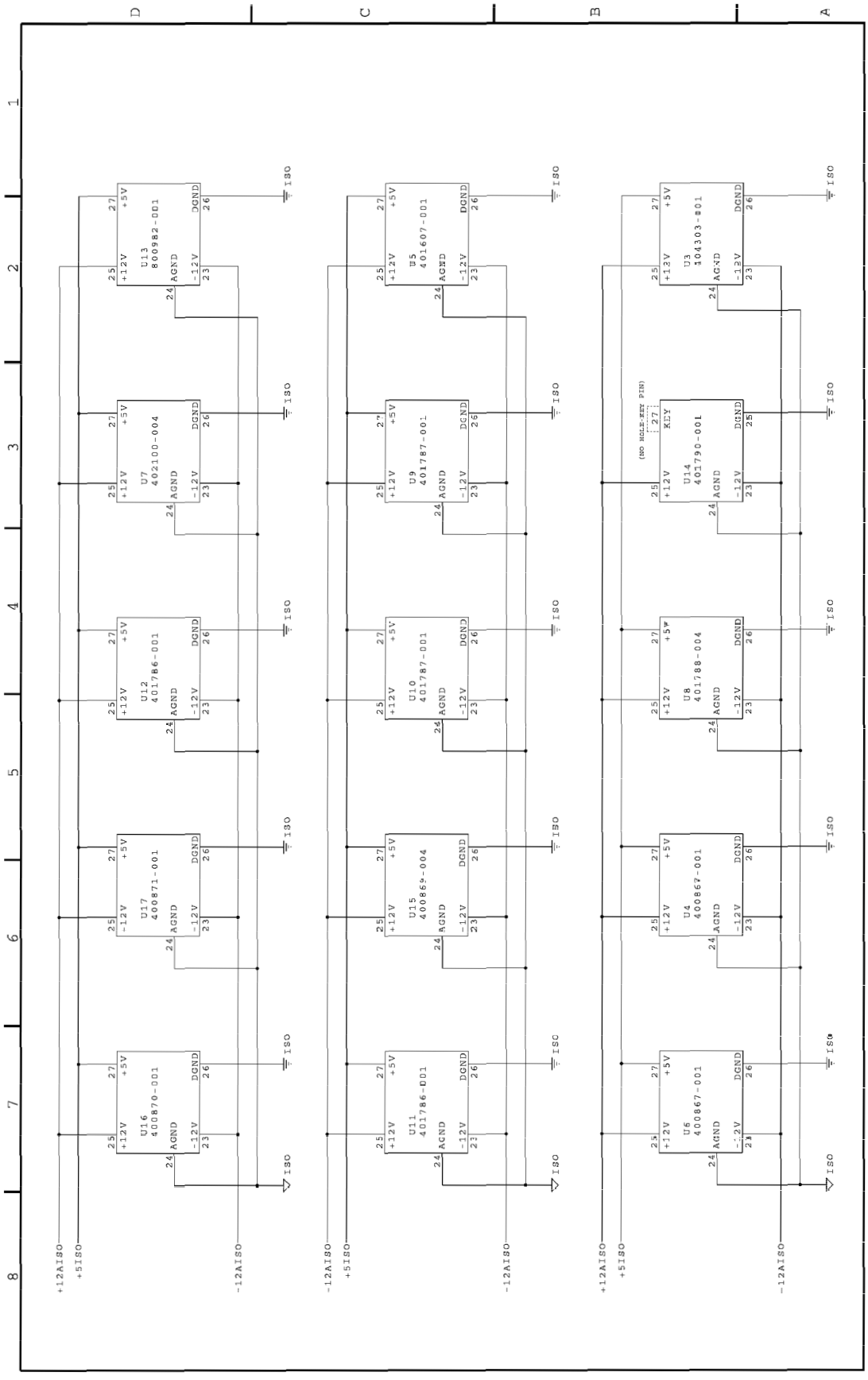
D
C
B
A
1
2
3
4
5
6
7
8
U13
800982-001
U7
402100-004
U12
401786-001
U17
400871-001
U16
400870-001
U5
401607-001
U9
401787-001
U10
401787-001
U15
400869-004
U11
401786-001
U3
404303-001
U14
401790-001
U8
401788-004
U4
400867-001
U6
400867-001
+12V
+5V
-12V
AGND
DGND
KEY
(NO HOLE:KEY PIN)
ISO
+12AISO
+5ISO
-12AISO

10 of 12

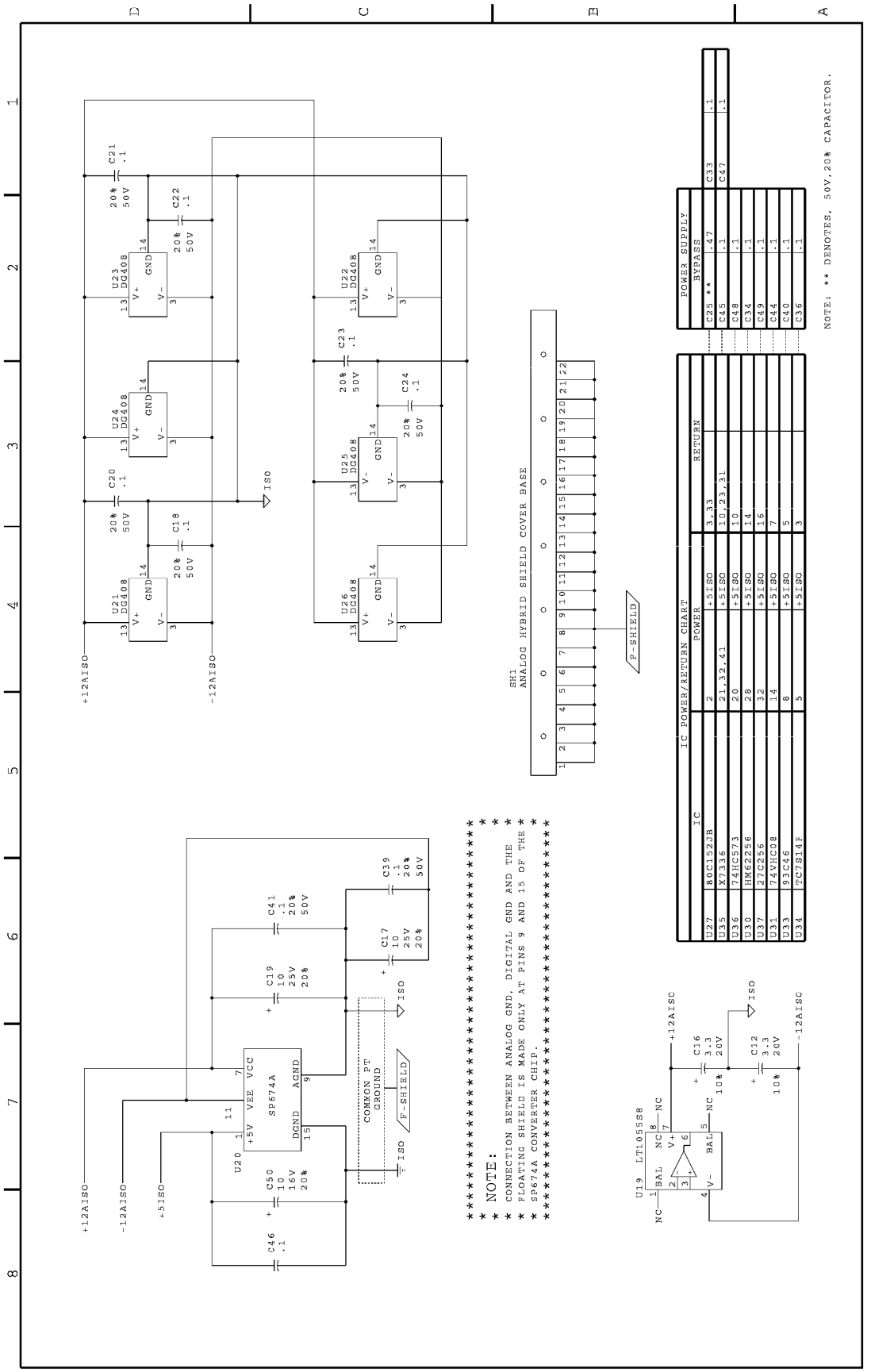
U21 DG408
U22 DG408
U23 DG408
U24 DG408
U25 DG408
U26 DG408
C20 .1
C21 .1
C22 .1
C23 .1
C24 .1
C18 .1
20% 50V
+12AISO
-12AISO
ISO
SH1
ANALOG HYBRID SHIELD COVER BASE
P-SHIELD
IC POWER/RETURN CHART
IC
POWER
RETURN
U27 80C152JB +5ISO 3,33
U35 X7336 +5ISO 10,23,31
U36 74HC573 +5ISO 10
U30 HM62256 +5ISO 14
U37 27C256 +5ISO 16
U31 74VHC08 +5ISO 7
U33 93C46 +5ISO 5
U34 TC7S14F +5ISO 3
POWER SUPPLY BYPASS
C25 ** .47
C45 .1
C48 .1
C34 .1
C49 .1
C44 .1
C40 .1
C36 .1
C33 .1
C47 .1
NOTE: ** DENOTES, 50V,20% CAPACITOR.
U20 SP674A
+5V VEE VCC
DGND AGND
C46 .1
C50 10 16V 20%
C19 10 25V 20%
C41 .1 20% 50V
C17 10 25V 20%
C39 .1 20% 50V
+5ISO
COMMON PT GROUND
F-SHIELD
U19 LT1055S8
BAL NC V+ V- BAL
C16 3.3 20V 10%
C12 3.3 20V 10%
* NOTE:
* CONNECTION BETWEEN ANALOG GND, DIGITAL GND AND THE
* FLOATING SHIELD IS MADE ONLY AT PINS 9 AND 15 OF THE
* SP674A CONVERTER CHIP.

REFDES	PAGE COORDINATES
U1:	2-D5
U10:	6-B3 8-D3
U11:	6-D3 8-B5
U12:	5-C3 8-C3
U13:	5-D3 8-C5
U14:	5-C4 8-C7
U15:	5-D4 8-D5
U16:	5-D5 8-D2
U17:	5-C8 8-B3
U18:	5-D8 8-C6
U19:	4-B4 8-D7
U2:	3-B6
U20:	4-D3 8-D6
U21:	4-D8
U22:	2-C5 9-B8
U23:	2-B4 9-D4
U24:	2-D2 9-C2
U25:	2-C2 9-D2
U26:	2-D2 9-D3
U27:	2-B2 9-C3
U28:	2-B2 9-C4
U29:	1-D7 9-B5
U3:	3-B6
U30:	7-D7
U31:	3-D2 9-A5
U32:	2-C7 9-D7

REFDES	PAGE COORDINATES
U33:	1-D2 9-A5
U34:	1-B2
U35:	1-C5,D8 2-D6 9-A5
U36:	1-C4 9-A5
U37:	1-D4 9-B5
U38:	1-A8 9-B5
U39:	1-C3 9-A5
U4:	3-C7,D7 9-A5,B2,C2
U40:	2-D7 9-A5
U5:	3-C4,D4,D6
U6:	7-C6 8-B2
U7:	6-B5 8-B6
U8:	6-B8 8-C2
U9:	6-D5 8-B7

CONN	LABEL
J1-1:	07071024
J1-10:	ISOAGND
J1-13:	+5AISO
J1-14:	-5AISO
J1-15:	-12AISO
J1-16:	+12AISO
J1-2:	07071016
J1-3:	07071020
J1-4:	RESP_CLK
J1-5:	ISOGND
J1-6:	ISOGND
J1-7:	+5ISO
J1-8:	+5ISO
J1-9:	ISOAGND
J2-1:	ISOAGND
J2-10:	BP4_EXC-
J2-11:	FSHIELD
J2-12:	BP4_SIG+
J2-13:	FSHIELD
J2-14:	BP3_SIG+
J2-15:	BP2_SIG-
J2-16:	BP1_EXC-
J2-17:	03011027
J2-18:	BP1_SIG+
J2-19:	ISOGND
J2-2:	DT/CO_IN1
J2-20:	BP1_SIG-
J2-21:	ISOGND
J2-22:	BP3_EXC+
J2-23:	BP2_EXC-
J2-24:	BP2_SIG+
J2-25:	BP2_EXC+
J2-26:	BP3_EXC-
J2-27:	03011022
J2-28:	BP4_SIG-
J2-29:	03011007
J2-3:	ISOAGND
J2-30:	BP3_SIG-
J2-31:	03011017
J2-32:	BP1_EXC+
J2-33:	03011012
J2-34:	+0.25VREF
J2-4:	DT/CO_IN2
J2-5:	03011037
J2-6:	CO_OFFSET
J2-7:	03011032
J2-8:	BP4_EXC+
J3-1:	A/D_VCAL
J3-2:	ISOGND
J3-3:	03043042
J3-4:	ISOAGND

Assembly Configurations PN 800330

An older acquisition processor PCB was manufactured with ten configurations. The differences between assemblies are:

- how many blood pressures channels they monitor, and
- how many ECG leadwires they use, and
- whether or not they support noninvasive blood pressure monitoring.

The table below lists the available configurations.

Table 29-2. Configurations

Part Number	Rev	Pressures	ECG Leadwires	NBP
800330-002	E	4	5	No
800330-004	B	4	10	No
800330-005	E	2	5	Yes
800330-006	B	2	10	Yes
800330-007	B	4	10	Yes
800330-008	B	4	5	Yes
800330-009	D	3	5	Yes
800330-010	E	3	10	Yes
800330-011	B	0	5	Yes
800330-012	B	0	10	Yes

Note that part number 800330 without a dashed suffix (ie, pn 800330, as opposed to pn 800330-001 or pn 800330-002) refers to all of the assemblies listed in the table above. Unless otherwise noted, all assemblies are the same.

Parts Location Diagram PN 800330B

1 of 2

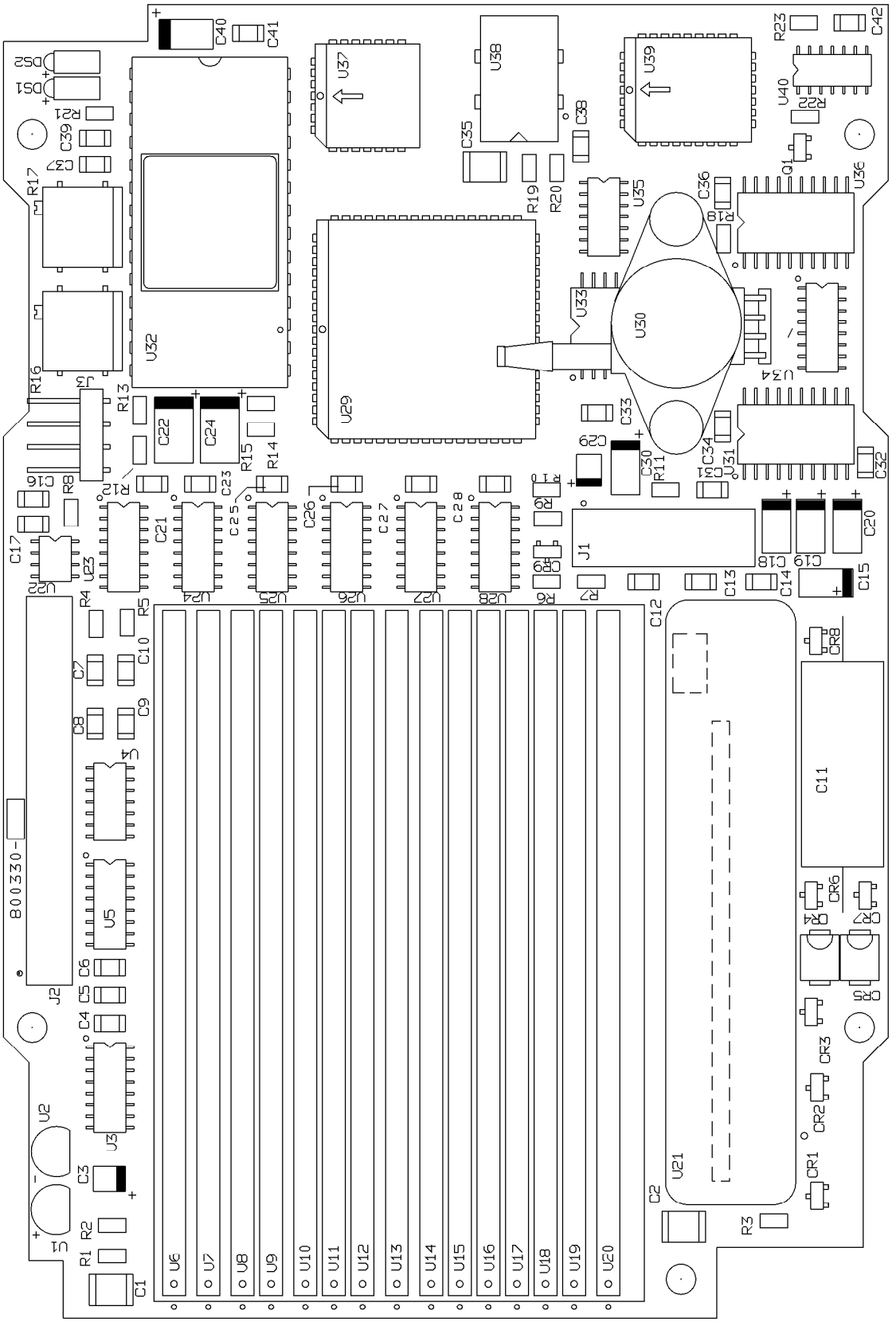

2 of 2

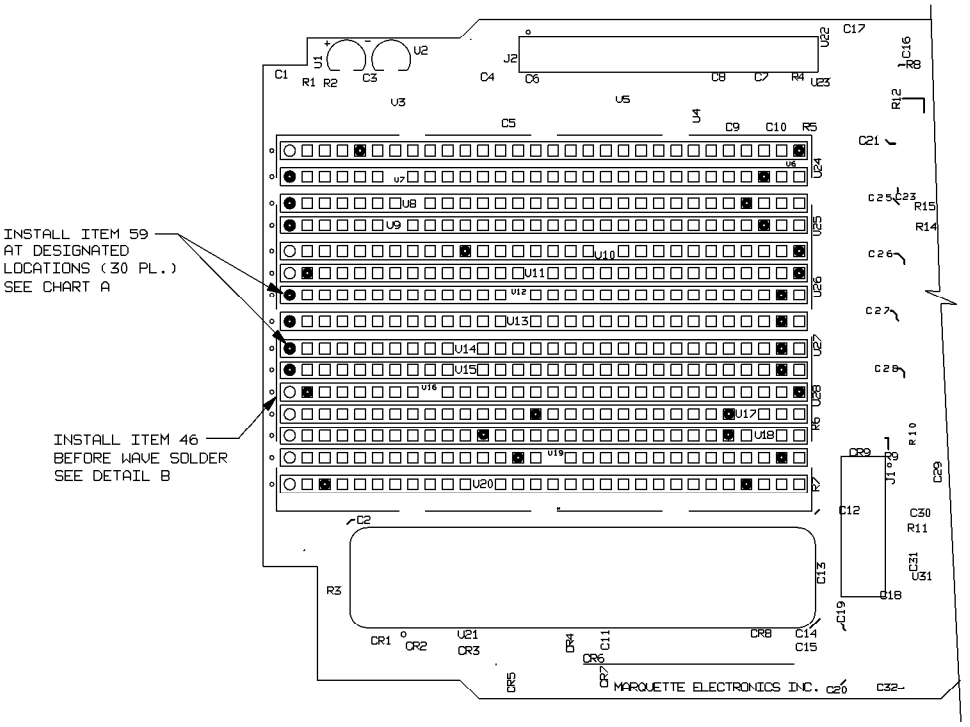

CHART A	
U6	5,30
U7	1,28
U8	1,27
U9	1,28
U10	11,30
U11	2,30
U12	1,29
U13	1,29
U14	1,29
U15	1,29
U16	2,30
U17	15,26
U18	12,26
U19	14,29
U20	3,27

SOCKET PIN LOCATIONS

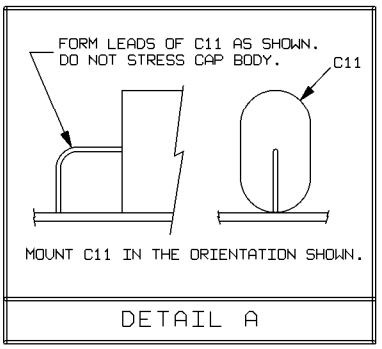

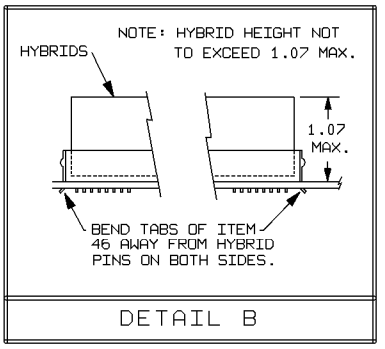

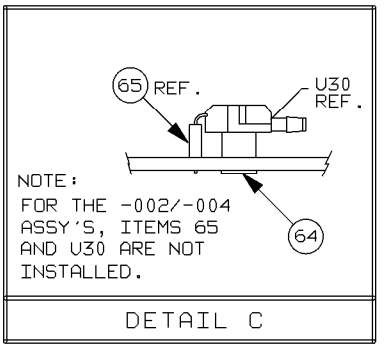

Parts List PN 800330B

Item	Parts List	Part Number	Qty
C1, 2, 35	Cap, Cer, 0.47µF, 20%	1187-474	3
C3, 29	Cap, Tant, 1.0µF, 10%, 35V, SM	403907-001	2
C4-10, 12, 13, 14, 16, 17, 21, 23, 25, 26, 27, 28, 31-34, 36-39, 41, 42	Cap, Cer, 0.1µF, 20%, 50V	404370-001	28
C11	Cap, MPE, 10µF, 5%, 35V	1215-106	1
C15, 18, 30, 40	Cap, Tant, 10µF, 20%, 10V, SM	1176-106	4
C19, 20	Cap, Tant, 4.7µF, 20%, 20V, SM	402004-001	2
C22, 24	Cap, Tant, 10µF, 20%, 25V, SM	1152-106	2
CR1	Diode, SM FDSO1503	2414-001	1
CR2, 3, 6, 7, 8	Diode, SM (Not Used on PN 800330-004, -006, -007, -010, and -012)	2414-001	5
CR4, 5	Transorb, 15V, 5%, 600W SM6T15A	403188-001	2
CR9	Diode, SM MMAD4148	401980-001	1
DS1, 2	Diode, Light-Emitting (Red)	2498-002	2
J1	Connector, Vertical, 16-Pin	1847-016	1
J2	Connector, PC Header, 34-Pin, Vertical	1778-234	1
J3	PC Post, Right Angle	1778-436	4
Q1	Transistor, PNP, SM T3906	2511-101	1
R1, 18	Res, Cer, 100Ω, 1%, 1/8W, SM	1082-755	2
R2	Res, Cer, 243K, 1%, 1/8W, SM	1082-798	1
R3	Res, Cer, 499K, 1%, 1/8W, SM	1082-499	1
R4, 5, 8, 9, 20, 23	Res, Cer, 1K, 1%, 1/8W, SM	1082-103	6
R6, 7, 10, 11	Res, Cer, 150Ω, 1%, 1/8W, SM	1082-767	4
R12	Res, Cer, 47.5K, 1%, 1/8W, SM	1082-757	1
R13	Res, Cer, 2K, 1%, 1/8W, SM	1082-201	1
R14, 15, 19, 21, 22	Res, Cer, 10K, 1%, 1/8W, SM	1082-104	5
R16, 17	Res, Var, 100Ω, 12-Turn, Side-Adjust	403407-001	2
SH1	Shield, Hybrids	403284-001	1
U1	Sensor, Temperature, TO92 LM35CZ	403396-001	1
U2	Volt Rgltr, +5V, 0.5%, 100mA, TO92 LP2950	402581-001	1
U3, 34	Res Ntwk, 10K	1062-103	2
U4	Diode Array, SM MMAD130	403957-001	1
U5	Res Ntwk, 1K	1062-102	1
U6	Hybrid, NBP (Not Used on PN 800330-002 or -004)	404303-001	1
U7	Hybrid, Dual Invasive BP Amplifier (Not Used on PN 800330-005, -006, -011, -012)	400867-001	1
U8	Hybrid, Quad Invasive BP Driver (Not Used on PN 800330-011, -012)	401607-001	1
U9	Hybrid, Dual Invasive BP Amplifier (Not Used on PN 800330-011, -012)	400867-001	1
U10	Hybrid, TEMP, Channel 2	402100-004	1

Item	Parts List	Part Number	Qty
U11	Hybrid, TEMP, Channel 1	401788-004	1
U12	Hybrid, ECG Final Amplifier (Not Used on PN 800330-002, -005, -008, -009, -011)	401787-001	1
U13	Hybrid, ECG Final Amplifier	401787-001	1
U14	Hybrid, ECG Pacemaker Rejection (Not Used on PN 800330-002, -005, -008, -009, -011)	401786-001	1
U15	Hybrid, ECG Pacemaker Rejection	401786-001	1
U16	Hybrid, ECG Pacemaker Detection	401785-001	1
U17	Hybrid, ECG Preamplifier II (Not Used on PN 800330-002, -005, -008, -009, -011)	401790-001	1
U18	Hybrid, ECG Preamplifier	400869-004	1
U19	Hybrid, RESP Carrier	400870-001	1
U20	Hybrid, RESP Demodulator	400871-004	1
U21	ECG Surge Protection Module	403993-001	1
U22	Operational Ampl, JFET, SM LT1055	402396-001	1
U23-28	Analog Multiplexer, 4-Channel, Dual, SM DG408DY/508DY	402024-001	6
U29	Microcontroller, Programmed, Communication Control, PLCC 80C152JB	400368-001	1
U30	Sensor, Pressure, 7.3PSI, Compensated (Not Installed on 800330-002 and -004)	404406-003	1
U31	Buffer/Driver, Octal, SM HC541	401974-001	1
U32	ADC, 12-Bit, Custom	405548-001	1
U33	RAM, Static, 32K x 8-Bit, SM 62256FLP	3202-256	1
U35	AND Gate, 2-Input, Quad, SM AC08	402717-001	1
U36	Latch, Transparent, Three-State Output, Octal, SM HC573	401971-001	1
U37	EPLD, Programmed, Acquisition Processor, PLCC	404569-002	1
U38	Oscillator, CMOS, 14.7456MHz, SM	401480-001	1
U39	EPROM, Programmed, Acquisition Processor Boot Code, PLCC	404905-001	1
U40	EEPROM, Serial NMC93C06	402577-001	1
-	Socket Hybrids	403283-002	1
-	Socket, 4-Pin (for U30) (Not Installed on PN 800330-002 and -004)	404939-001	1
-	Socket, Mini (for U6-U20)	1818-201	30
-	Spacer Strip, 36-Position (for U30) (Not Installed on PN 800330-002 or -004)	405598-001	AR
-	Spacer, Round, 6-32 x 1/4 (for U30) (Not Installed on PN 800330-002 and -004)	4663-604	1
-	Circuit Board	800331-001B	1
-	Schematic Diagram	SD800330-001B	–

Schematic Diagram PN SD800330-001B

1 of 11

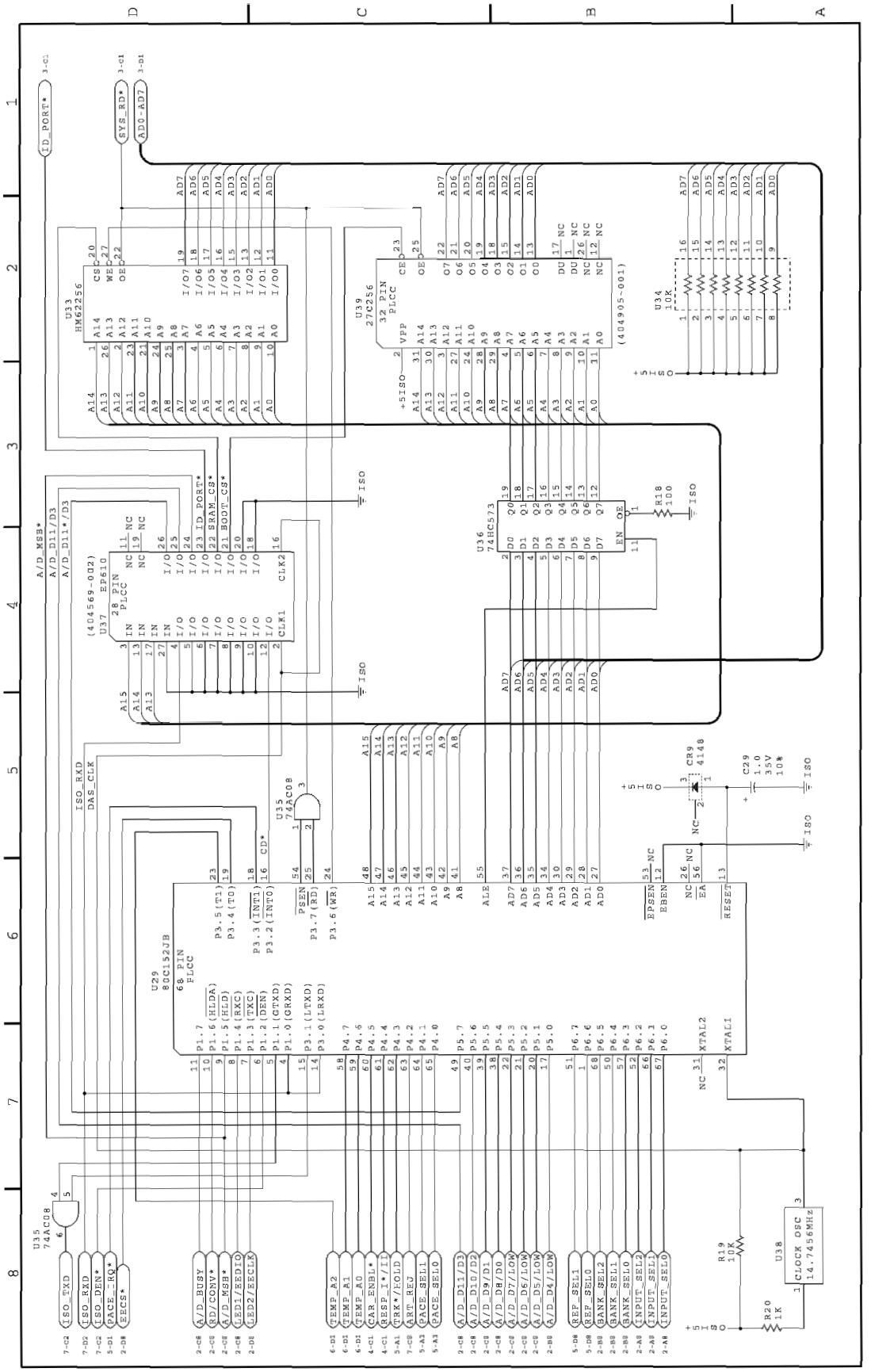

2 of 11

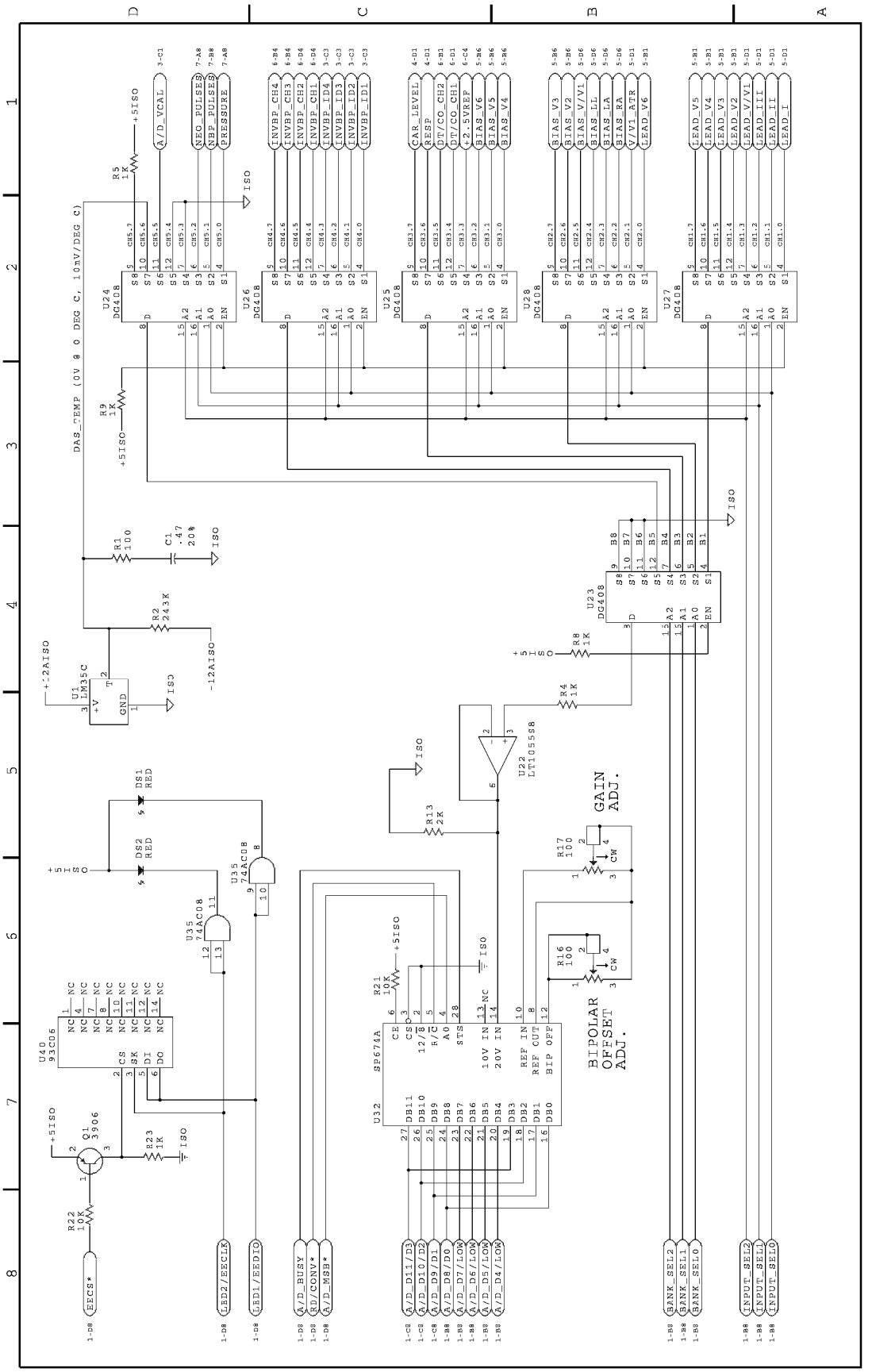
GAIN ADJ.
BIPOLAR OFFSET ADJ.
U24 DG408
U25 DG408
U26 DG408
U27 DG408
U28 DG408
U23 DG408
U22 LT1055S8
U32 SP674A
U40 93C06
U35 74AC08
U1 LM35C
Q1 3906
DS1 RED
DS2 RED
R1 100
R2 243K
R4 1K
R5 1K
R8 1K
R9 1K
R13 2K
R16 100
R17 100
R21 10K
R22 10K
R23 1K
C1 .47 20%
DAS_TEMP (0V @ 0 DEG C, 10mV/DEG C)
+5ISO
ISO
+-12AISO
-12AISO
A/D_VCAL
NEO_PULSE
NBP_PULSE
PRESSURE
INVBP_CH4
INVBP_CH3
INVBP_CH2
INVBP_CH1
INVBP_ID4
INVBP_ID3
INVBP_ID2
INVBP_ID1
CAR_LEVEL
RESP
DT/CO_CH2
DT/CO_CH1
+2.5VREF
BIAS_V6
BIAS_V5
BIAS_V4
BIAS_V3
BIAS_V2
BIAS_V/V1
BIAS_LL
BIAS_LA
BIAS_RA
V/V1_ATR
LEAD_V6
LEAD_V5
LEAD_V4
LEAD_V3
LEAD_V2
LEAD_V/V1
LEAD_III
LEAD_II
LEAD_I
EECS*
LED2/EECLK
LED1/EEDIO
A/D_BUSY
RD/CONV*
A/D_MSB*
A/D_D11/D3
A/D_D10/D2
A/D_D9/D1
A/D_D8/D0
A/D_D7/LOW
A/D_D6/LOW
A/D_D5/LOW
A/D_D4/LOW
BANK_SEL2
BANK_SEL1
BANK_SEL0
INPUT_SEL2
INPUT_SEL1
INPUT_SEL0

3 of 11

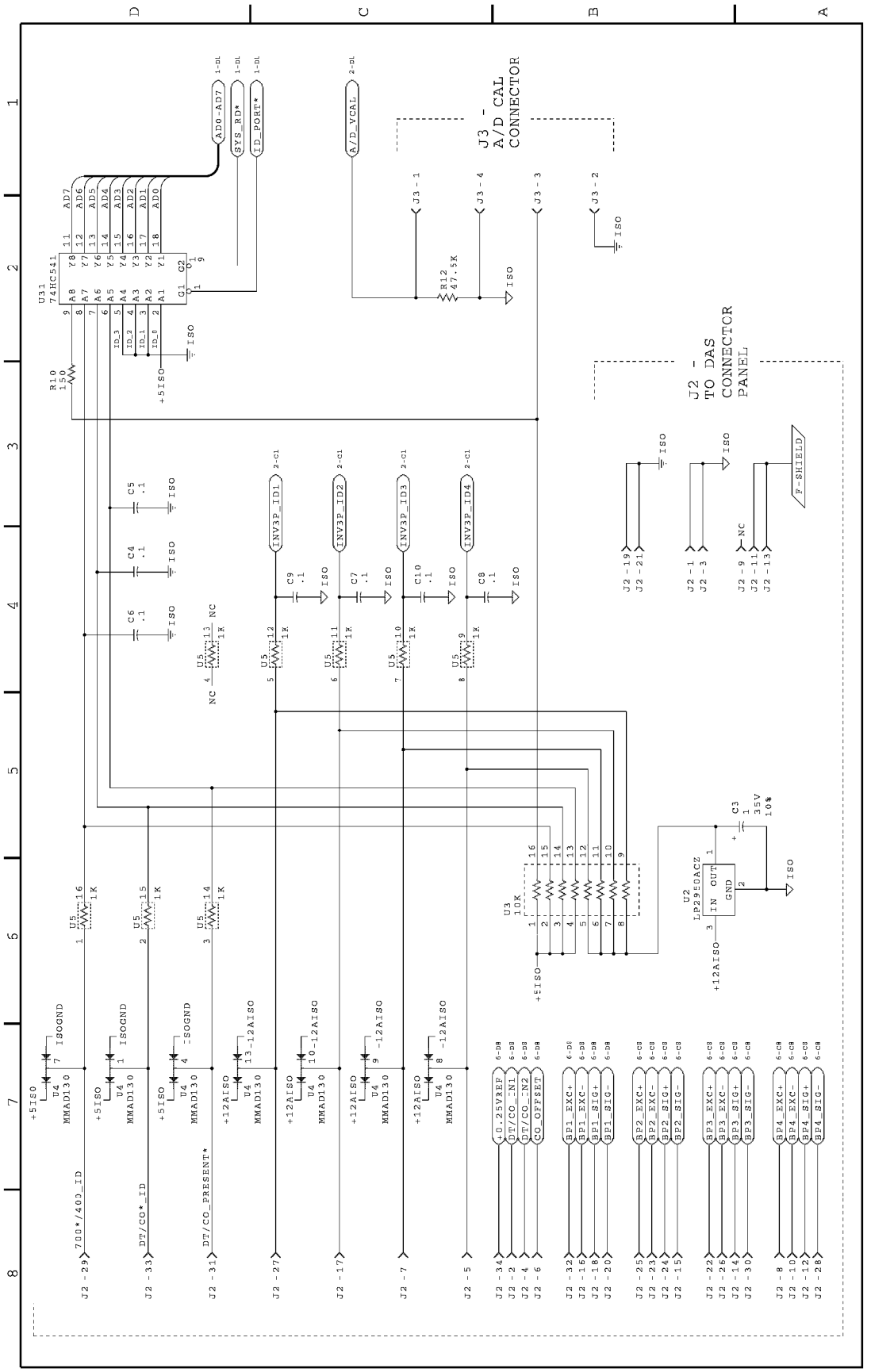
J3 -
A/D CAL
CONNECTOR
J2 -
TO DAS
CONNECTOR
PANEL
U31
74HC541
R10
150
R12
47.5K
U2
LP2950ACZ
U3
10K
C3
1
35V
10%
U4
MMAD130
U5
1K
C5
.1
C4
.1
C6
.1
C9
.1
C7
.1
C10
.1
C8
.1
AD0-AD7
SYS_RD*
ID_PORT*
A/D_VCAL
INV3P_ID1
INV3P_ID2
INV3P_ID3
INV3P_ID4
F-SHIELD
+5ISO
ISO
+12AISO
-12AISO
ISOGND
-SOGND
700*/400_ID
DT/CO*_ID
DT/CO_PRESENT*
+0.25VREF
DT/CO_N1
DT/CO_N2
CO_OFFSET
BP1_EXC+
BP1_EXC-
BP1_SIG+
BP1_SIG-
BP2_EXC+
BP2_EXC-
BP2_SIG+
BP2_SIG-
BP3_EXC+
BP3_EXC-
BP3_SIG+
BP3_SIG-
BP4_EXC+
BP4_EXC-
BP4_SIG+
BP4_SIG-

4 of 11

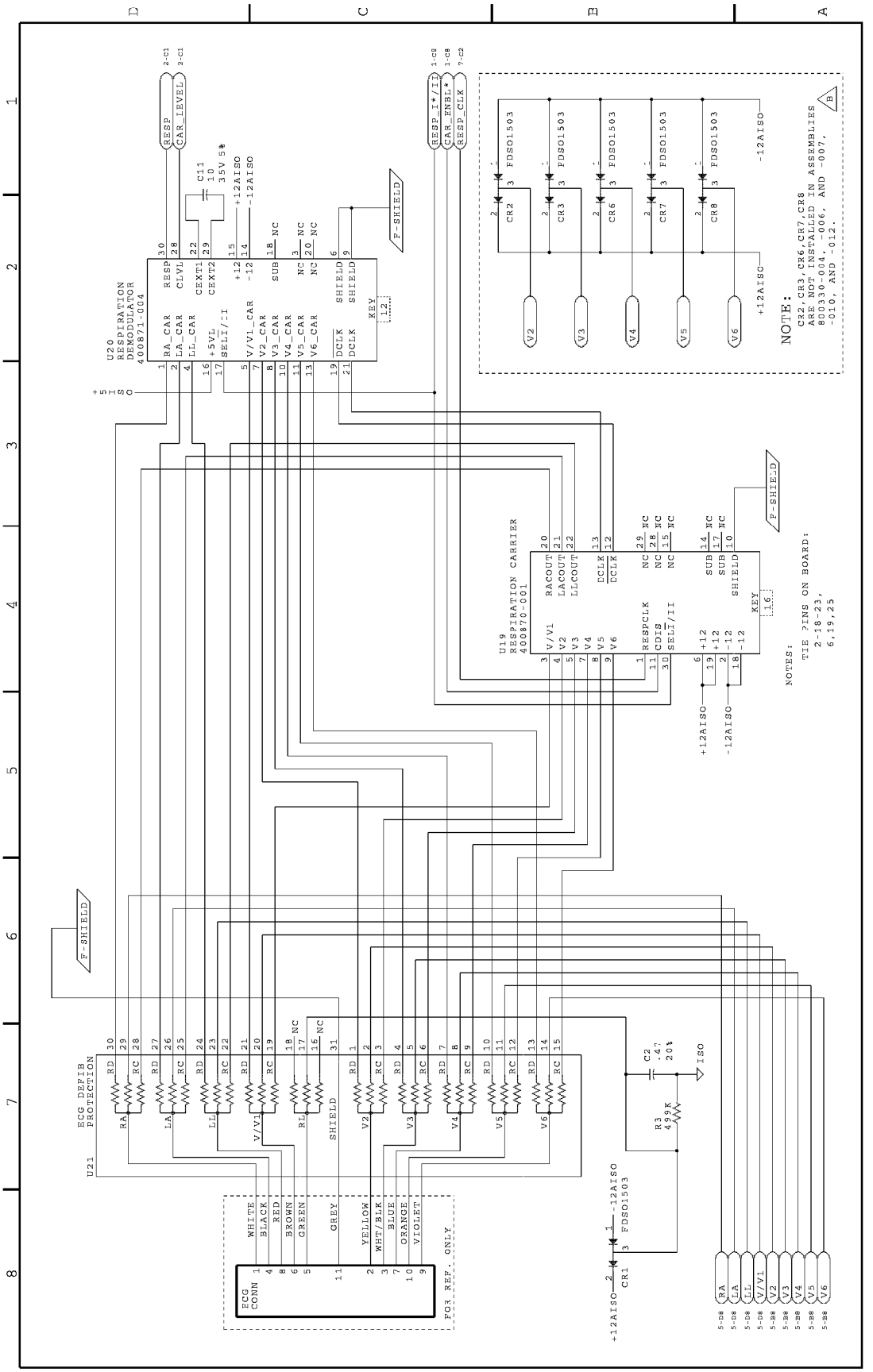
U20
RESPIRATION
DEMODULATOR
400871-004
U19
RESPIRATION CARRIER
400870-001
U21
ECG DEFIB
PROTECTION
ECG
CONN
FOR REF. ONLY
NOTE:
CR2,CR3,CR6,CR7,CR8
ARE NOT INSTALLED IN ASSEMBLIES
800330-004, -006, AND -007,
-010, AND -012.
NOTES:
TIE PINS ON BOARD:
2-18-23,
6,19,25
F-SHIELD
FDS01503
WHITE
BLACK
RED
BROWN
GREEN
GREY
YELLOW
WHT/BLK
BLUE
ORANGE
VIOLET

5 of 11

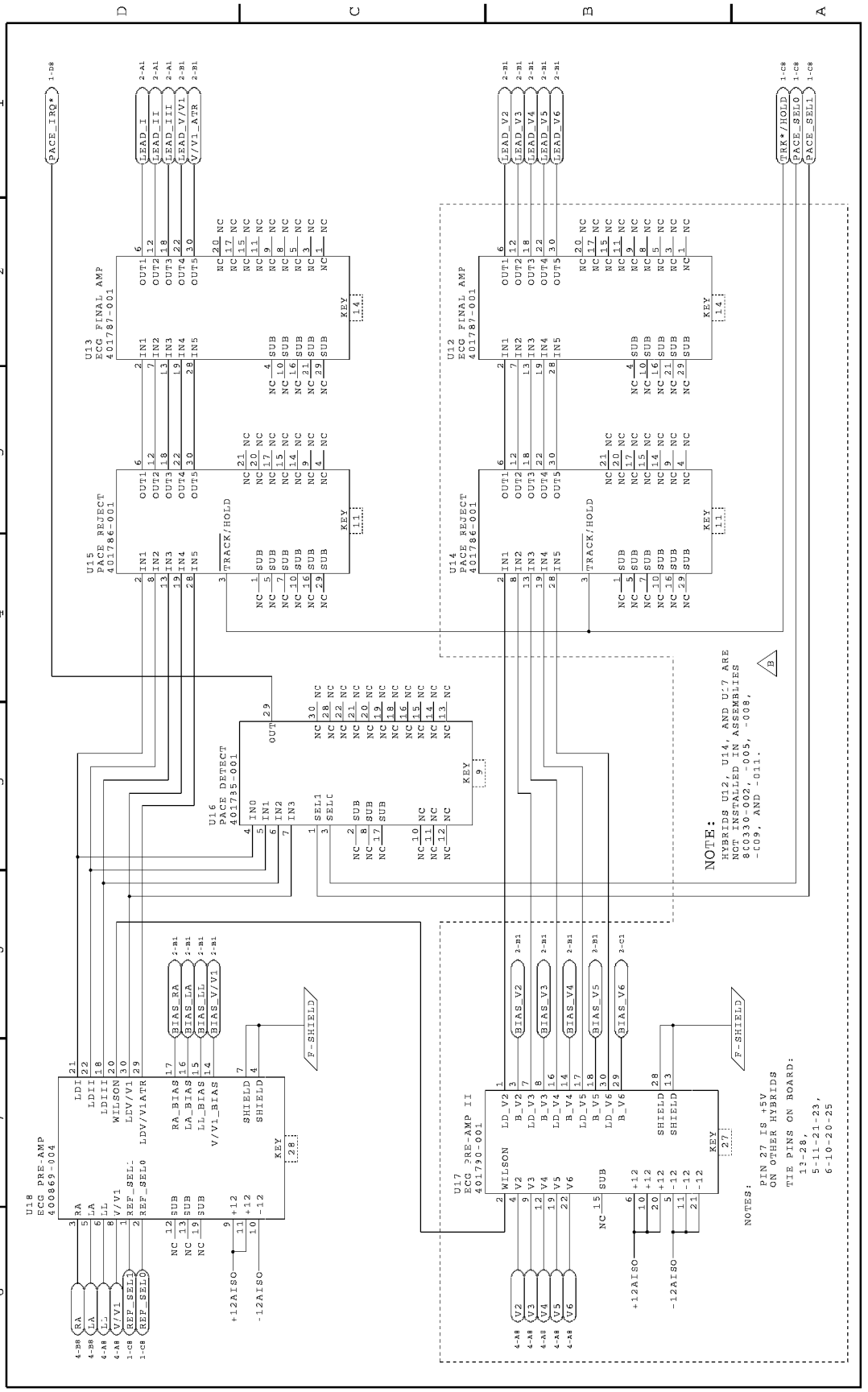
U18
ECG PRE-AMP
400869-004
U15
PACE REJECT
401786-001
U13
ECG FINAL AMP
401787-001
U14
PACE REJECT
401786-001
U12
ECG FINAL AMP
401787-001
U16
PACE DETECT
401735-001
U17
ECG PRE-AMP II
401790-001
NOTE:
HYBRIDS U12, U14, AND U17 ARE
NOT INSTALLED IN ASSEMBLIES
8C0330-002, -005, -008,
-C09, AND -011.
NOTES:
PIN 27 IS +5V
ON OTHER HYBRIDS
TIE PINS ON BOARD:
13-28,
5-11-21-23,
6-10-20-25

6 of 11

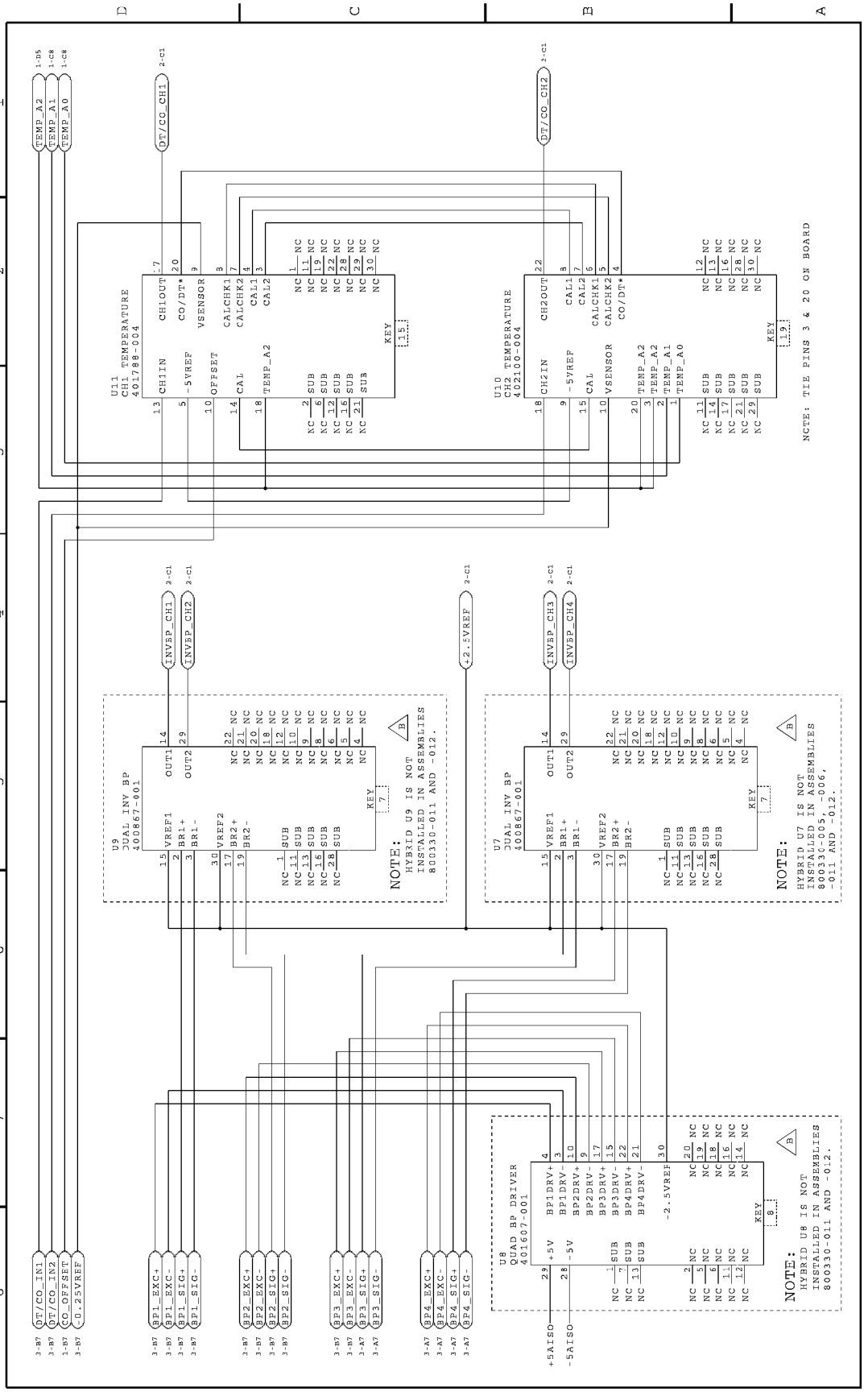
U11
CH1 TEMPERATURE
401788-004
U10
CH2 TEMPERATURE
402100-004
U9
DUAL INV BP
400867-001
U7
DUAL INV BP
400867-001
U8
QUAD BP DRIVER
401607-001
NOTE: HYBRID U9 IS NOT INSTALLED IN ASSEMBLIES 800330-011 AND -012.
NOTE: HYBRID U7 IS NOT INSTALLED IN ASSEMBLIES 800330-005, -006, -011 AND -012.
NOTE: HYBRID U8 IS NOT INSTALLED IN ASSEMBLIES 800330-011 AND -012.
NOTE: TIE PINS 3 & 20 ON BOARD

7 of 11

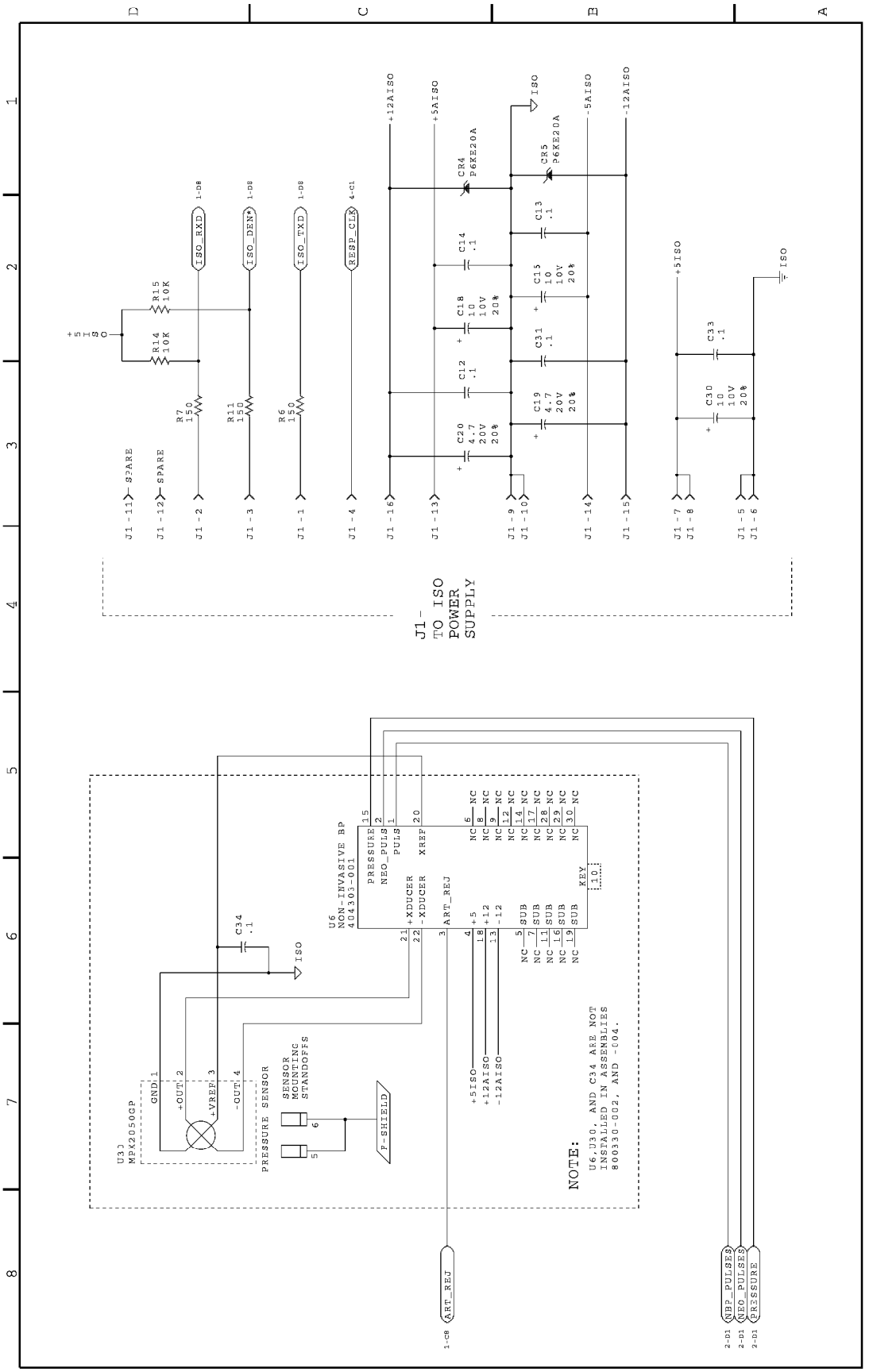
J1-
TO ISO
POWER
SUPPLY
U33
MPX2050GP
PRESSURE SENSOR
SENSOR
MOUNTING
STANDOFFS
P-SHIELD
U6
NON-INVASIVE BP
404303-001
NOTE:
U6,U30, AND C34 ARE NOT
INSTALLED IN ASSEMBLIES
800330-002, AND -004.
ART_REJ
NBP_PULSES
NEO_PULSES
PRESSURE
ISO_RXD
ISO_DEN*
ISO_TXD
RESP_CLK
+12AISO
+5AISO
-5AISO
-12AISO
+5ISO
ISO

8 of 11

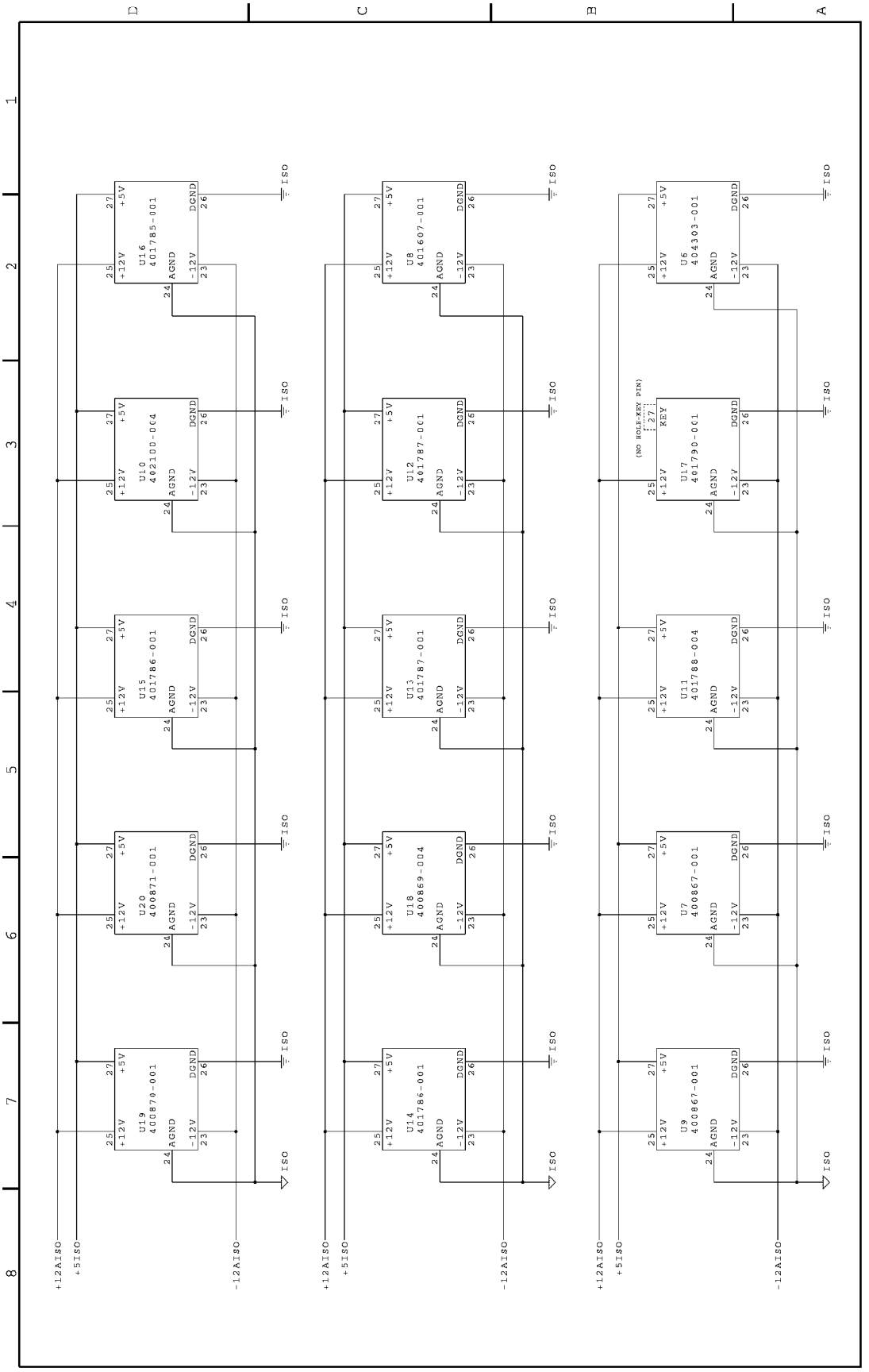
D
C
B
A
1
2
3
4
5
6
7
8
+12AISO
+5ISO
-12AISO
ISO
U16
401785-001
U10
402100-064
U15
401786-001
U20
400871-001
U19
400870-001
U8
401697-001
U12
401787-001
U13
401787-001
U18
400869-004
U14
401786-001
U6
404303-001
U17
401790-001
U11
401788-004
U7
400867-001
U9
400867-001
+12V
+5V
AGND
-12V
DGND
(NO HOLE-KEY PIN)
KEY

9 of 11

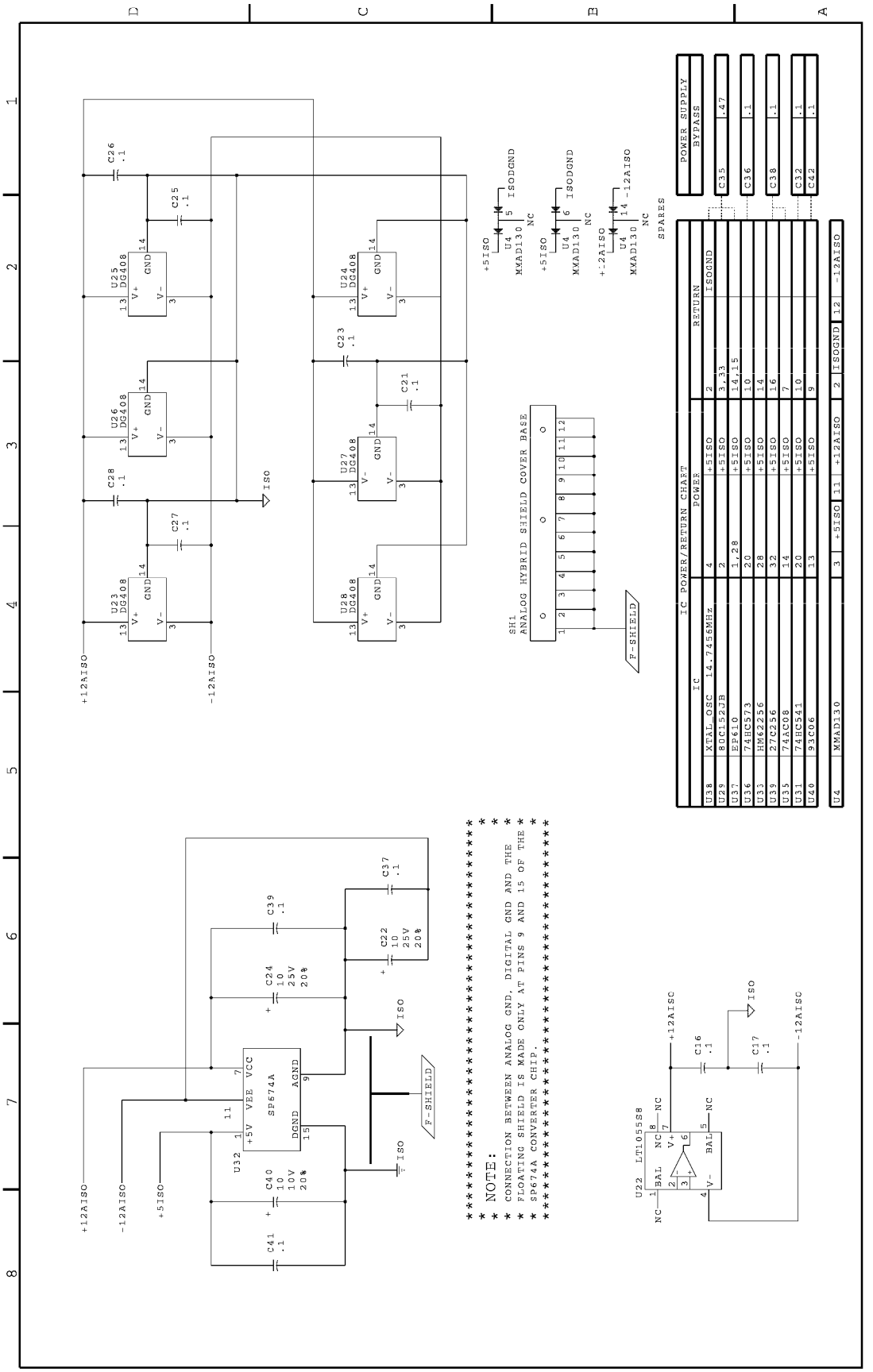
U23 DG408
U24 DG408
U25 DG408
U26 DG408
U27 DG408
U28 DG408
C21 .1
C23 .1
C25 .1
C26 .1
C27 .1
C28 .1
+12AISO
-12AISO
ISO
SH1
ANALOG HYBRID SHIELD COVER BASE
P-SHIELD
+5ISO
ISODGND
NC
+-2AISO
-12AISO
SPARES
POWER SUPPLY BYPASS
C35 .47
C36 .1
C38 .1
C32 .1
C42 .1
IC POWER/RETURN CHART
IC
POWER
RETURN
U38 XTAL_OSC 14.7456MHz 4 +5ISO 2
U29 80C152JB 2 +5ISO 3,43 ISOGND
U37 EP610 1,28 +5ISO 14,15
U36 74HC573 20 +5ISO 10
U33 HM62256 28 +5ISO 14
U39 27C256 32 +5ISO 16
U35 74AC08 14 +5ISO 7
U31 74HC541 20 +5ISO 10
U40 93C06 13 +5ISO 9
U4 MMAD130 1 3 +5ISO 11 +12AISO 2 ISOGND 12 -12AISO
U32 SP674A
+5V VEE VCC
DGND AGND
C39 .1
C37 .1
C24 10 25V 20%
C22 10 25V 20%
C40 10 10V 20%
C41 .1
+12AISO
-12AISO
+5ISO
ISO
P-SHIELD
U22 LT1055S8
BAL NC V+ V- BAL
C16 .1
C17 .1
* NOTE:
* CONNECTION BETWEEN ANALOG GND, DIGITAL GND AND THE
* FLOATING SHIELD IS MADE ONLY AT PINS 9 AND 15 OF THE
* SP674A CONVERTER CHIP.

REFDES	PAGE COORDINATES
U1:	2-D5
U10:	6-B3 8-D3
U11:	6-D3 8-B5
U12:	5-C3 8-C3
U13:	5-D3 8-C5
U14:	5-C4 8-C7
U15:	5-D4 8-D5
U16:	5-D5 8-D2
U17:	5-C8 8-B3
U18:	5-D8 8-C6
U19:	4-B4 8-D7
U2:	3-B6
U20:	4-D3 8-D6
U21:	4-D8
U22:	2-C5 9-B8
U23:	2-B4 9-D4
U24:	2-D2 9-C2
U25:	2-C2 9-D2
U26:	2-D2 9-D3
U27:	2-B2 9-C3
U28:	2-B2 9-C4
U29:	1-D7 9-B5
U3:	3-B6
U30:	7-D7
U31:	3-D2 9-A5
U32:	2-C7 9-D7

REFDES	PAGE COORDINATES
U33:	1-D2 9-A5
U34:	1-B2
U35:	1-C5,D8 2-D6 9-A5
U36:	1-C4 9-A5
U37:	1-D4 9-B5
U38:	1-A8 9-B5
U39:	1-C3 9-A5
U4:	3-C7,D7 9-A5,B2,C2
U40:	2-D7 9-A5
U5:	3-C4,D4,D6
U6:	7-C6 8-B2
U7:	6-B5 8-B6
U8:	6-B8 8-C2
U9:	6-D5 8-B7

11 of 11

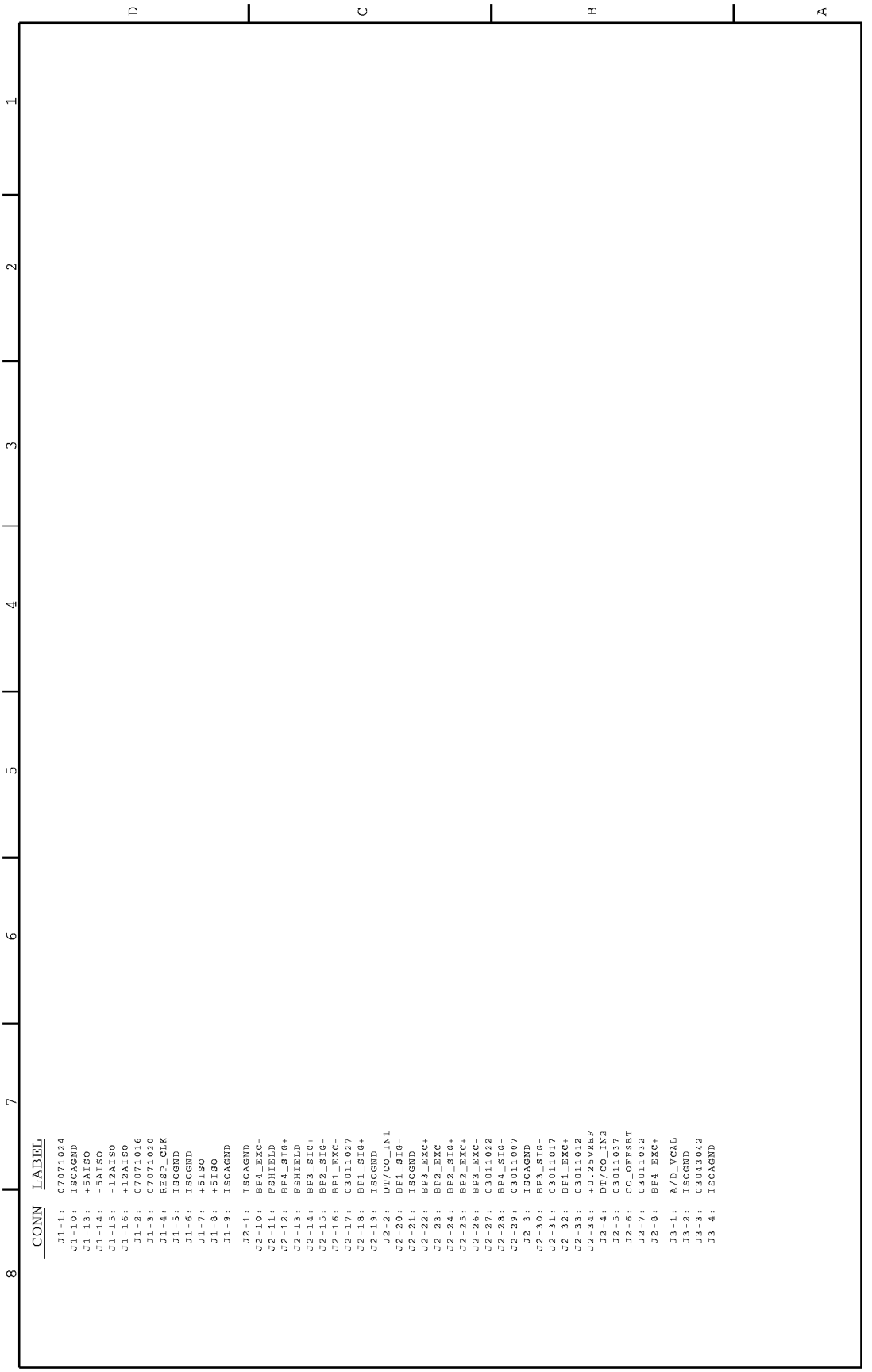

CONN	LABEL
J1-1:	07071024
J1-10:	ISOAGND
J1-13:	+5AISO
J1-14:	-5AISO
J1-15:	-12AISO
J1-16:	+12AISO
J1-2:	07071016
J1-3:	07071020
J1-4:	RESP_CLK
J1-5:	ISOGND
J1-6:	ISOGND
J1-7:	+5ISO
J1-8:	+5ISO
J1-9:	ISOAGND
J2-1:	ISOAGND
J2-10:	BP4_EXC-
J2-11:	FSHIELD
J2-12:	BP4_SIG+
J2-13:	FSHIELD
J2-14:	BP3_SIG+
J2-15:	BP2_SIG-
J2-16:	BP1_EXC-
J2-17:	03011027
J2-18:	BP1_SIG+
J2-19:	ISOGND
J2-2:	DT/CO_IN1
J2-20:	BP1_SIG-
J2-21:	ISOGND
J2-22:	BP3_EXC+
J2-23:	BP2_EXC-
J2-24:	BP2_SIG+
J2-25:	BP2_EXC+
J2-26:	BP3_EXC-
J2-27:	03011022
J2-28:	BP4_SIG-
J2-29:	03011007
J2-3:	ISOAGND
J2-30:	BP3_SIG-
J2-31:	03011017
J2-32:	BP1_EXC+
J2-33:	03011012
J2-34:	+0.25VREF
J2-4:	DT/CO_IN2
J2-5:	03011037
J2-6:	CO_OFFSET
J2-7:	03011032
J2-8:	BP4_EXC+
J3-1:	A/D_VCAL
J3-2:	ISOGND
J3-3:	03043042
J3-4:	ISOAGND

30 PULSE OXIMETRY PCB PN 414409/800674/401198

General **30-2**

Exploded View PN 414409-001B **30-3**

Parts List PN 414409-001C **30-4**

Parts Location Diagram PN 800674-003A **30-5**

Parts List PN 800674-003A **30-7**

Schematic Diagram PN SD800674-003A **30-10**

Assembly Revisions PN 800674 ..... **30-19**

Parts Location Diagram PN 800674-001A/002B **30-20**

Parts List PN 800674-001A/002B **30-22**

Schematic Diagram PN SD800674-002A **30-25**

General

For Tram 250, 450, 650, and 850 modules, the circuit board, pn 800674-00X, supports MEI and Nellcor SpO_2 probes and is produced by Marquette Medical Systems. The encasing housing assembly for the circuit board is pn 414409-001.

NOTE
The pulse oximetry PCB may also be referred to as SpO_2 PCB.

There are two different versions of the pulse oximetry PCB:

- pn 800674-001, which was first used in all of the A-series modules,
- pn 800674-002, which was introduced in the SL-series modules, and then added to the A-series modules, and
- pn 800674-003, which is currently used for all modules.

NOTE
Replace version -001 or -002 circuit board with a -003 circuit board, but do not replace a -003 with a -001 or -002 circuit board.

For Tram 200, 400, 600, and 800 modules, the PCB, pn 401189-001, supports Ohmeda probes and is produced by Ohmeda. Ohmeda supports this circuit board with an interface manual. The manual includes schematic diagrams, theory of operation, and troubleshooting to the component level.

For service information about the Ohmeda circuit board, the manual, *Ohmeda MINX Module Interface Manual*, pn 1128-304, is only available directly from the following address.

Ohmeda
1315 West Century Drive
Louisville, CO 80027
Phone: (303) 666-7001
(800) 652-2469
Fax: 303) 665-9231
Telex: 296 445 BTI UR

For more details about the interconnect circuit board between the Ohmeda circuit board and the power indicator circuit board, refer to chapter 25.

Exploded View PN 414409-001C

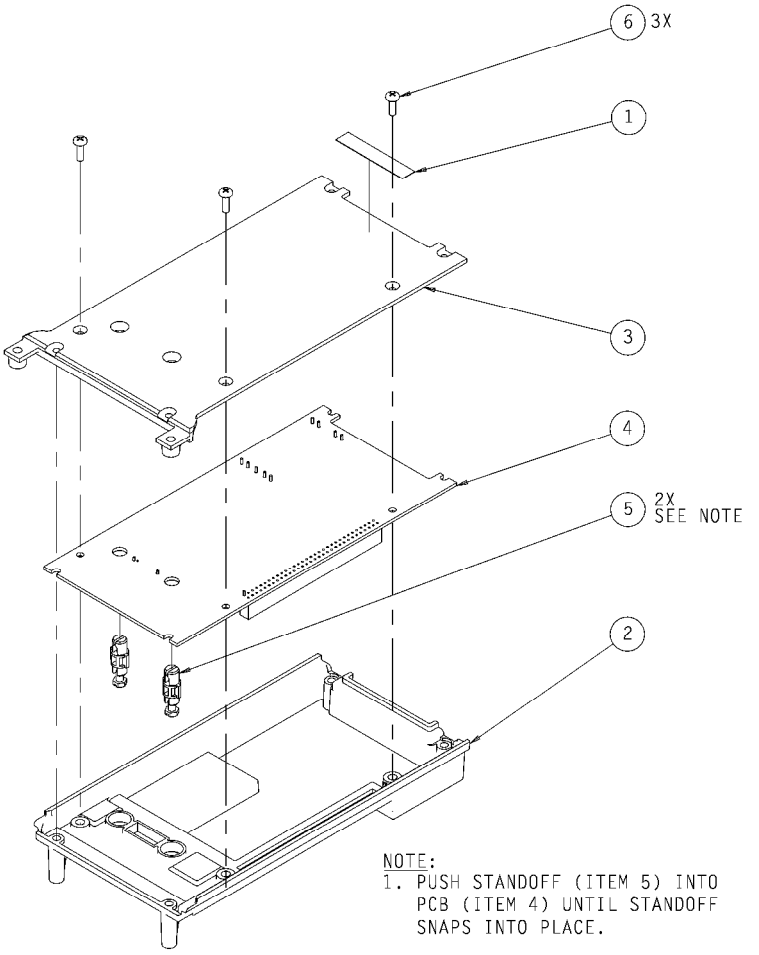

Parts List PN 414409-001C

Item	Parts List	Part Number	Qty
1	Label	407132-002	1
2	Housing, Pulse Oximetry	412219-003	1
3	Cover, Pulse Oximetry	412248-001	1
4	Pulse Oximetry PCB	800674-003	1
5	Standoff, 1/4-Turn, 0.25	413454-001	2
6	Screw, BDGH, 4-40 x 3/8	45074-412	3
1	Label	407132-002	1

Parts Location Diagram PN 800674-003A

1 of 2

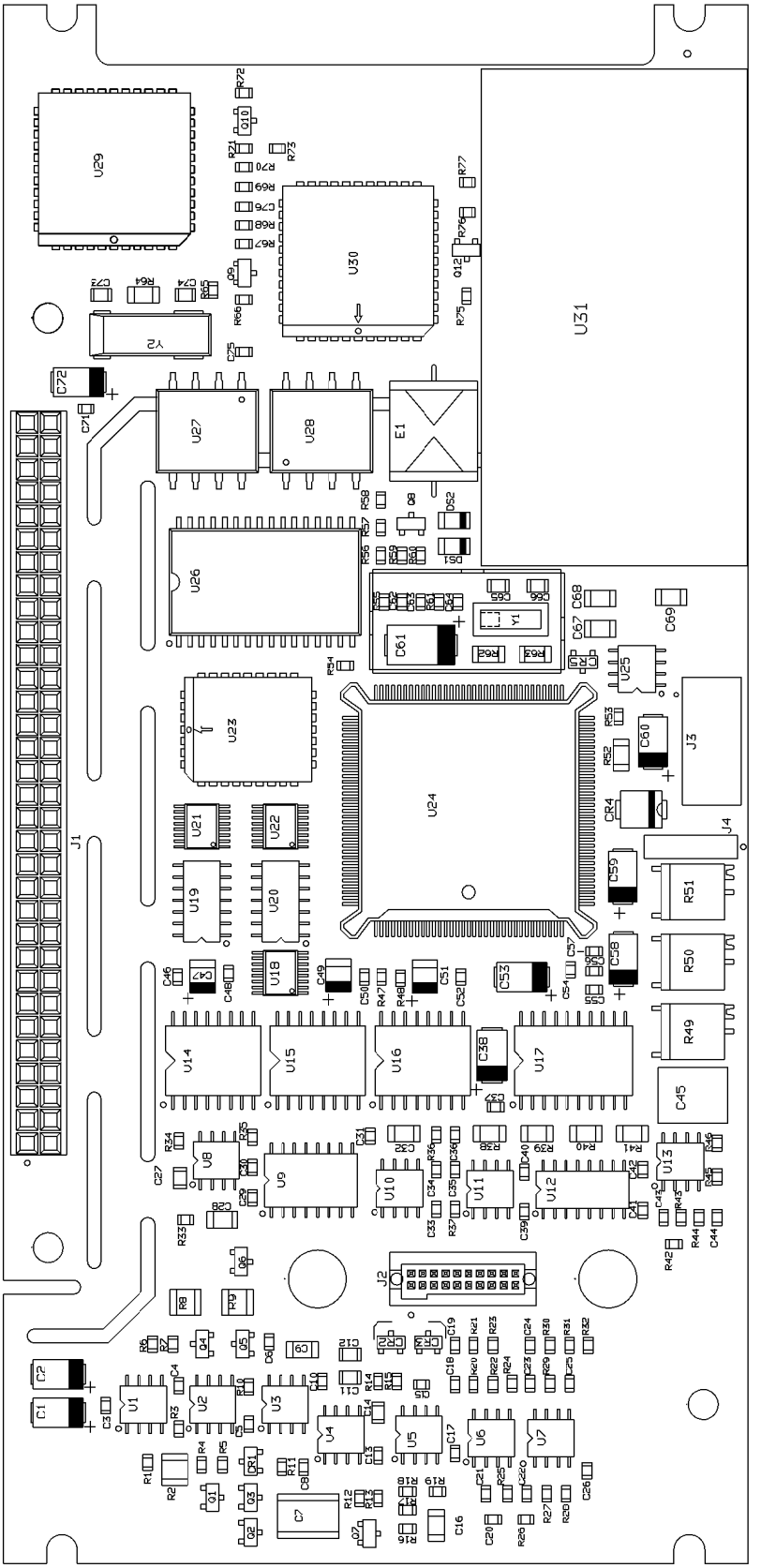

2 of 2

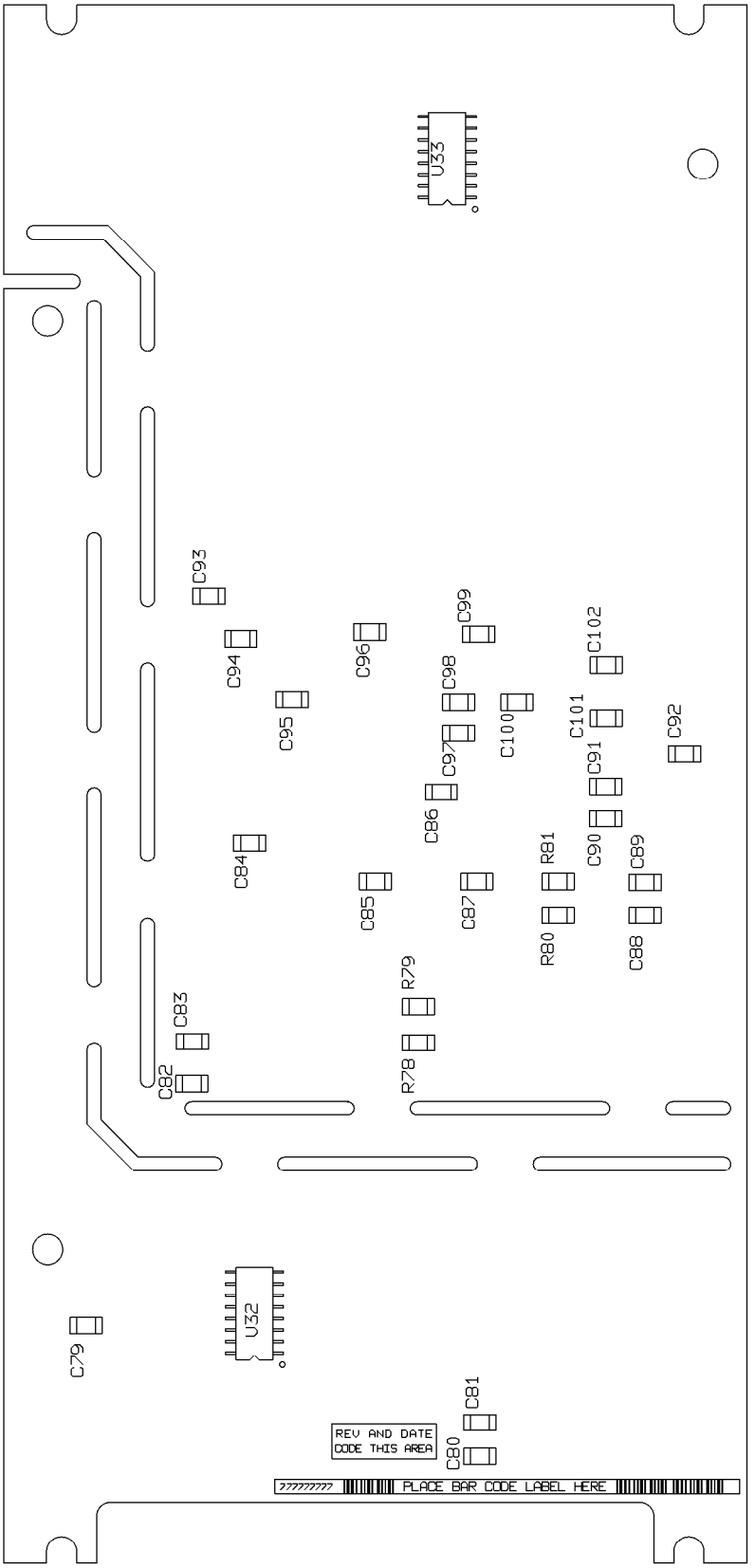
U33
C93
C94
C95
C96
C99
C98
C97
C100
C102
C101
C91
C92
C86
C90
C89
C84
R81
C85
C87
R80
C88
R79
C83
R78
C82
U32
C79
C81
C80
REV AND DATE
CODE THIS AREA
PLACE BAR CODE LABEL HERE

Parts List PN 800674-003A

Item	Parts List	Part Number	Qty
C1, 2, 38, 53, 58-60, 72	Cap, Tant, 10µF, 20%, 16V, SM	1176-106	8
C3, 20, 22, 24, 25, 34, 36, 43, 46, 48, 50, 52, 57, 62, 71	Cap, Cer, 0.1µF, 5%, 50V	411575-012	15
C4-6, 8, 10, 13, 15, 17-19, 21, 23, 26, 29-31, 33, 35, 37, 39, 40-42, 44, 54-56, 63, 64, 75, 76	Cap, Cer, 0.1µF, 5%, 16V	411575-002	31
C7	Cap, Cer, 0.33µF, 5%, 50V	1181-334	1
C9, 28, 32	Cap, Cer, 0.0015µF, 5%, SM	1181-152	3
C11	Cap, Cer, 470pF, 5%, 50V, SM	1181-471	1
C12	Cap, Cer, 0.001µF, 5%, 50V, SM	1181-102	1
C14, 65, 66, 73, 74	Cap, Cer, 22pF, 5%, 50V, SM	1181-220	5
C16	Cap, Cer, 0.1µF, 5%, 50V, SM	1182-104	1
C27	Cap, Cer, 150pF, 5%, 50V, SM	1181-151	1
C45	Cap, PP, 0.01µF, 1%, 63V	408822-001	1
C47, 49, 51	Cap, Tant, 1.0µF, 10%, 35V, SM	403907-001	3
C61	Cap, Tant, 47µF, 20%, 10V, SM	405585-001	1
C67, 69, 79, 81-87, 89-102	Cap, Cer, 0.1µF, 20%, 50V	404370-001	24
C68, 80, 88	Cap, Cer, 0.01µF, 5%, 50V, SM	400265-001	3
CR1	Diode, SM MMAD4148	401980-001	1
CR2, 3	Diode, SM FDSO1503	2414-001	2
CR4	Diode, Schottky, Barrier, 1A, 40V, SM MBRS140T3	403187-001	1
CR5	Diode, Schottky, SM BAT54	401985-001	1
DS1	Diode, Light-Emitting (Green)	414417-004	1
DS2	Diode, Light-Emitting (Red)	414417-002	1
E1	Surge Protector, 7.5kV, ±15%	1931-001	1
J1	Connector, PC Header, 64-Pin	1847-064	1
J2	Connector, PC Header, 20-Pin, SM	413053-002	1
J3	PC Post, 2 x 5-Pin	413864-001	1
J4	PC Post, 1 x 4-Pin	413864-002	1
Q1, 4	Transistor, PNP, SM T2907A	405759-001	2
Q2, 5	Transistor, NPN, SM MMBT222	404927-001	2
Q3, 6	Transistor, MOSFET, N-Channel, Enhancement Mode, SM VN0605T	406267-001	2
Q7	Transistor, JFET, P-Channel, SM MMBFJ117	404417-001	1
Q8, 9	Transistor, PNP, SM T3906	2511-101	2
Q10, 12	Transistor, NPN, SM T3904	2511-001	2
R1, 7, 48	Res, Cer, 100K, 1%, 1/16W, SM	410334-019	3
R2, 8, 9	Res, Cer, 10.0K, 1%, 1/4W	407468-002	3

Item	Parts List	Part Number	Qty
R3, 11, 20-23, 27, 28, 30, 32, 43, 47, 53-55, 57, 60, 65, 68-73, 75-77	Res, Cer, 10K, 1%, 1/16W, SM	410334-013	27
R4-6, 10	Res, Cer, 4.75K, 1%, 1/16W, SM	410334-010	4
R12	Res, Cer, 475Ω, 1%, 1/16W, SM	410334-064	1
R13	Res, Cer, 499K, 1%, 1/16W, SM	410334-072	1
R14, 15	Res, Cer, 23.2K, 1%, 1/16W, SM	410334-069	2
R16, 17, 34	Res, Cer, 301K, 1%, 1/16W, SM	410334-071	3
R18, 19, 56	Res, Cer, 1K, 1%, 1/16W, SM	410334-008	3
R24	Res, Cer, 150Ω, 1%, 1/16W, SM	410334-028	1
R25, 29, 42, 61	Res, Cer, 100Ω, 1%, 1/16W, SM	410334-003	4
R26	Res, Cer, 16.5K, 1%, 1/16W, SM	410334-068	1
R31	Res, Cer, 38.3K, 1%, 1/16W, SM	410334-047	1
R33, 35	Res, Cer, 3.01K, 1%, 1/16W, SM	410334-018	2
R36	Res, Cer, 2K, 1%, 1/16W, SM	410334-009	1
R37	Res, Cer, 4.99K, 1%, 1/16W, SM	410334-066	1
R38	Res, Cer, 200K, 0.1%, 1/8W, SM	1067-832	1
R39	Res, Cer, 38.8K, 0.1%, 1/8W, SM	1067-388	1
R40	Res, Cer, 248K, 0.1%, 1/8W, SM	1067-249	1
R41	Res, Cer, 178K, 0.1%, 1/8W, SM	1067-849	1
R44	Res, Cer, 11.5K, 1%, 1/16W, SM	410334-014	1
R45, 46	Res, Cer, 75K, 1%, 1/16W, SM	410334-063	2
R49, 50, 51	Res, Var, 2K, Side Adjust, SM	409023-003	3
R52	Res, Cer, 1.5K, 1%, 1/8W, SM	1082-768	1
R58, 66	Res, Cer, 681Ω, 1%, 1/16W, SM	410334-065	2
R59, 67	Res, Cer, 8.66K, 1%, 1/16W, SM	410334-067	2
R62	Res, Cer, 20M, 1%, 1/8W, SM	1081-510	1
R63	Res, Cer, 332K, 1%, 1/8W, SM	1082-874	1
R64	Res, Cer, 10M, 5%, 1/8W, SM	1081-106	1
R78, 79	Res, 340 Ω, 1%, 1/8W, SM	1082-790	2
R80, 81	Res, Cer, 10K, 1%, 1/8W, SM	1082-104	2
SH1	Shield, Crystal (For Y1)	411267-003	1
U1	Volt Rgltr, Adj, SM LP2951A	3076-001	1
U2-4, 7, 8, 10, 11, 13	Operational Ampl, Dual, SM TLC2272	412809-001	8
U5	Operational Ampl, SM TLC2201	403385-002	1
U6	Voltage Reference, 2.5V, SM AD680	410736-001	1
U9	Res, Ntwk, 10K, 0.1%, SM	405134-001	1
U12	Analog Switch, SPST, CMOS, Quad DG413	408821-001	1
U14-16	DAC, 12-Bit, SM 7543	405439-001	3
U17	Data Acquisition, SM LTC1290	405948-002	1
U18,21, 22	Res, Ntwk, 100K	1049-203	3
U19	Inverter, Hex, SM HC04	3038-004	1
U20	Counter, Binary, 4-Bit, Dual, SM HC393	3038-393	1
U23	EEPROM, Flash Memory, Tram SpO_2	414474-003	1

Item	Parts List	Part Number	Qty
U24	Microcontroller, 16-MHz, SM 68332	408794-001	1
U25	Sensor, Undervoltage, 4.6V, SM MC34064D5	408952-001	1
U26	RAM, Static, 128K x 8-Bit, 70nS, SM 628128	406255-002	1
U27, 28	Isolator, Optically Coupled, SM 2611	408825-001	2
U29	EPROM, Tram SpO_2 Communication	414443-002	1
U30	Programmable Peripheral Interface, PLCC 82C55A	404697-001	1
U31	Converter, DC-to-DC, Isolated, ±5V	416151-001	1
U32	Res Ntwk, 100K, SM	1061-104	1
U33	Diode Pair Array, ESD/Overvoltage Protection, SM	412586-001	1
Y1	Crystal, 31.2kHz, SM	408946-001	1
Y2	Crystal Oscillator, 3.6864-MHz, SM	408828-001	1
-	Circuit Board	800675-003A	1
-	Schematic Diagram	SD8000674-003A	–

Schematic Diagram PN SD800674-003A

1 of 9

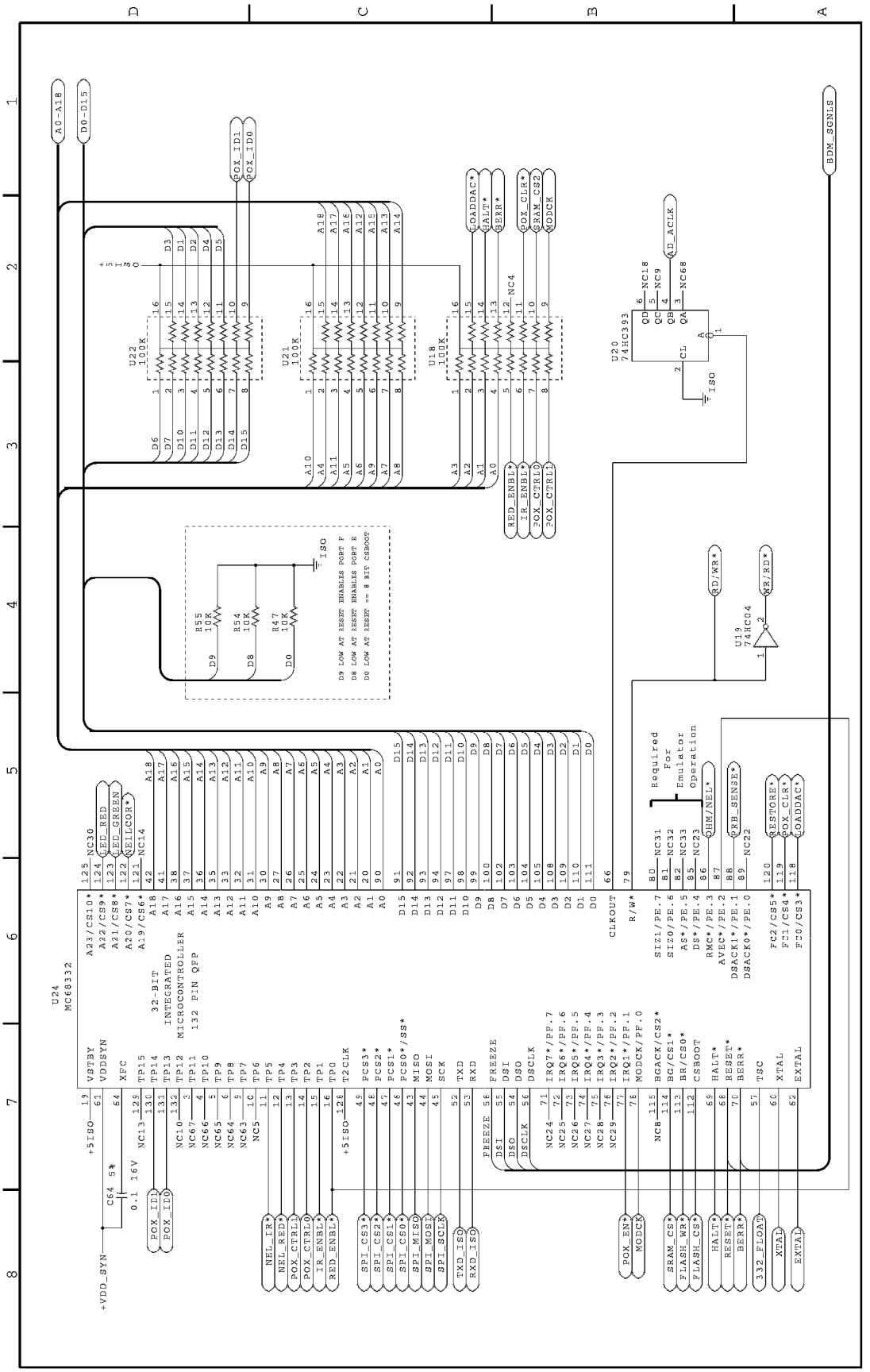

2 of 9

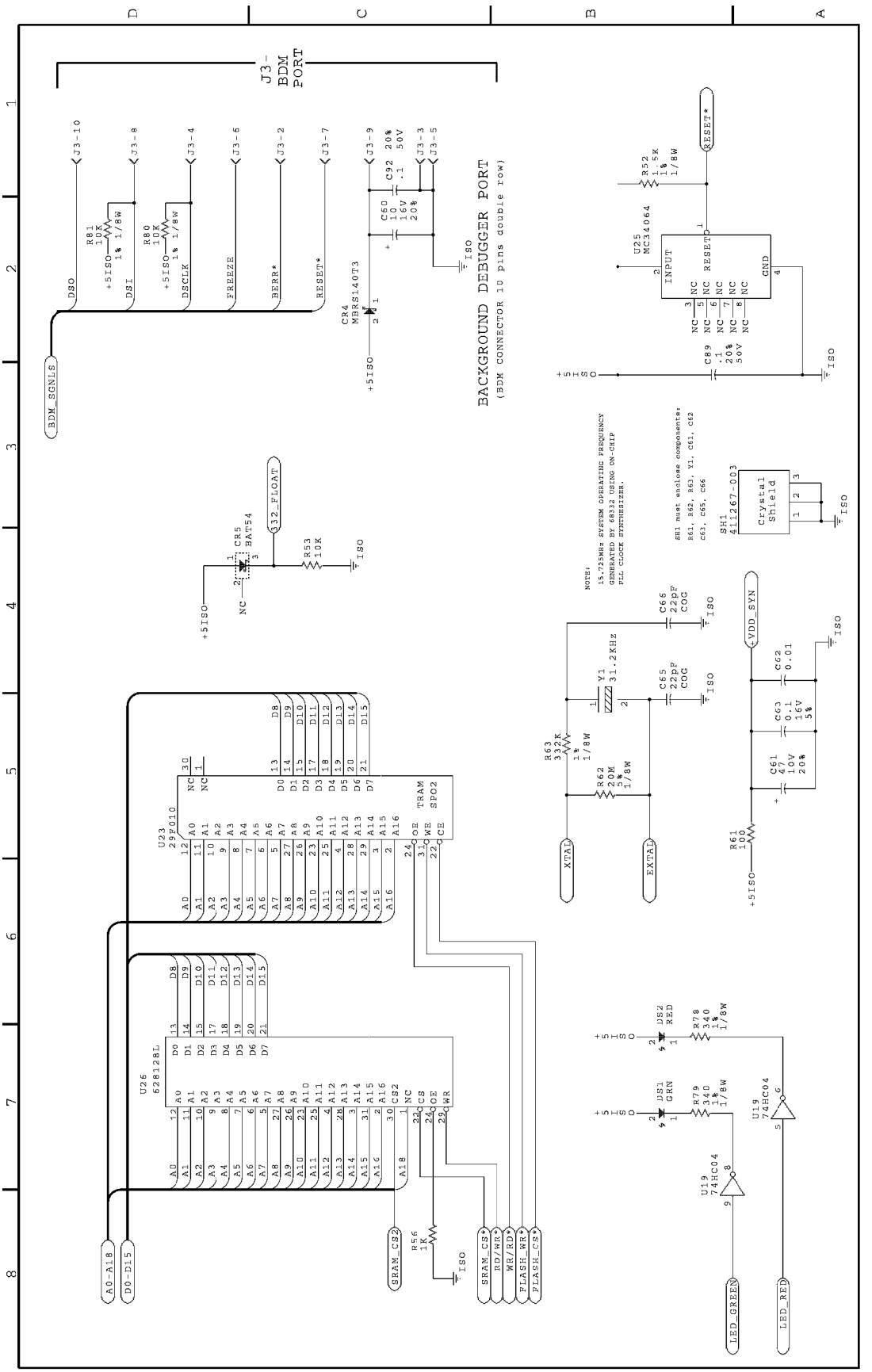
J3-
BDM
PORT
BACKGROUND DEBUGGER PORT
(BDM CONNECTOR 10 pins double row)
U25
MC34064
INPUT
RESET
GND
U23
29F010
U26
628128L
TRAM
SPO2
U19
74HC04
U19
74HC04
Crystal
Shield
SH1
411267-003
Y1
31.2KHz
XTAL
EXTAL
VDD_SYN
LED_GREEN
LED_RED
A0-A18
D0-D15
SRAM_CS2
SRAM_CS*
RD/WR*
WR/RD*
PLASH_WR*
PLASH_CS*
BDM_SGNLS
+5ISO
ISO
NOTE:
15.725MHz SYSTEM OPERATING FREQUENCY
GENERATED BY 68332 USING ON-CHIP
PLL CLOCK SYNTHESIZER.
SH1 must enclose components:
R61, R62, R63, Y1, C61, C62
C63, C65, C66

3 of 9

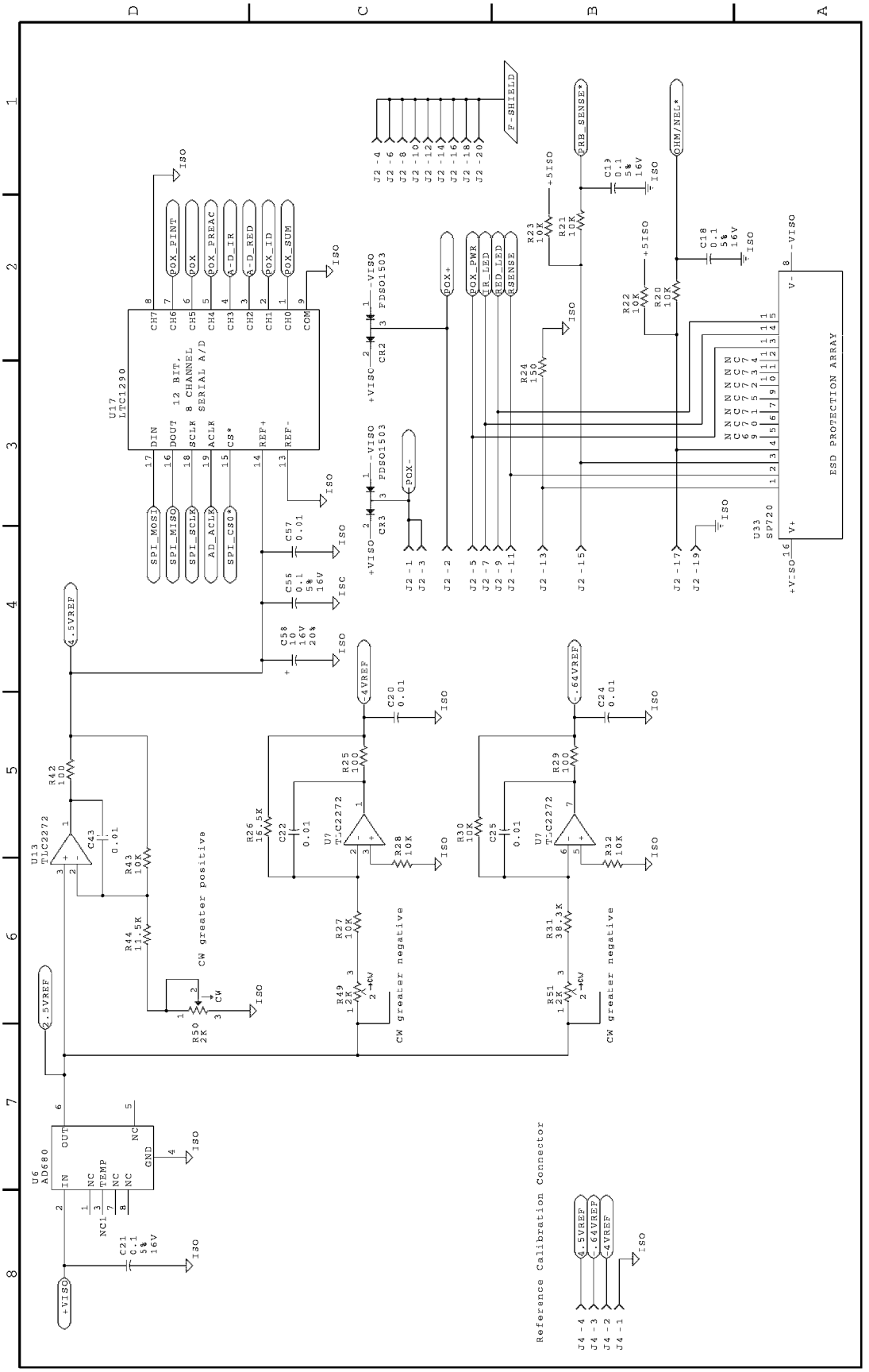
U17
LTC1290
12 BIT,
8 CHANNEL
SERIAL A/D
DIN
DOUT
SCLK
ACLK
CS*
REF+
REF-
CH7
CH6
CH5
CH4
CH3
CH2
CH1
CH0
COM
SPI_MOSI
SPI_MISO
SPI_SCLK
AD_ACLK
SPI_CSO*
POX_PINT
POX
POX_PREAC
A-D_IR
A-D_RED
POX_ID
POX_SUM
ISO
C57
0.01
C55
0.1
5%
16V
C58
10
16V
20%
4.5VREF
2.5VREF
U13
TLC2272
C43
0.01
R42
100
R43
10K
R44
11.5K
R50
2K
CW
CW greater positive
U6
AD580
IN
OUT
NC
TEMP
GND
NC1
C21
0.1
5%
16V
+VISO
R26
16.5K
R25
10
C22
0.01
U7
TLC2272
R28
10K
R27
10K
R49
12K
CW greater negative
C20
0.01
.4VREF
R30
10K
C25
0.01
R29
10
R32
10K
R31
38.3K
R51
12K
-.64VREF
C24
0.01
Reference Calibration Connector
J4-4
J4-3
J4-2
J4-1
FDS01503
CR2
CR3
-VISO
POX+
POX-
POX_PWR
IR_LED
RED_LED
RSENSE
R24
150
R23
10K
R21
10K
+5ISO
PRB_SENSE*
C19
0.1
5%
16V
HM/NEL*
C18
0.1
5%
16V
R22
10K
R20
10K
U33
SP720
V+
V-
+V-SO
ESD PROTECTION ARRAY
J2-4
J2-6
J2-8
J2-10
J2-12
J2-14
J2-16
J2-18
J2-20
F-SHIELD
J2-1
J2-3
J2-2
J2-5
J2-7
J2-9
J2-11
J2-13
J2-15
J2-17
J2-19

4 of 9

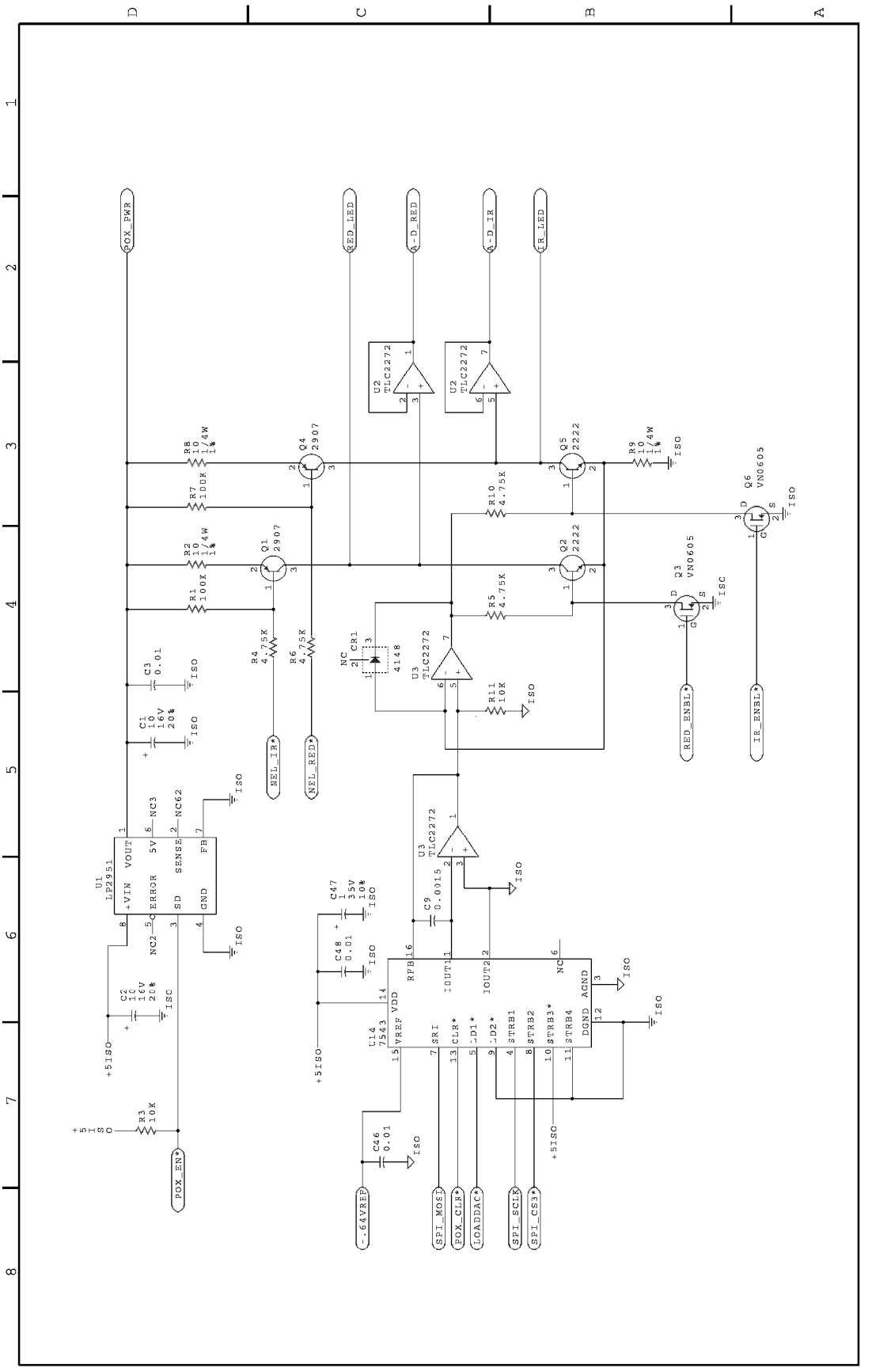
POX_PWR
RED_LED
A-D_RED
A-D_IR
IR_LED
U2 TLC2272
U2 TLC2272
R8 10 1/4W 1%
Q4 2907
Q5 2222
R9 10 1/4W 1%
ISO
R7 100K
R10 4.75K
Q6 VN0605
R2 10 1/4W 1%
Q1 2907
Q2 2222
R1 100K
R5 4.75K
Q3 VN0605
ISC
C3 0.01
R4 4.75K
R6 4.75K
NC
CR1 4148
U3 TLC2272
R11 10K
C1 10 16V 20%
NEL_IR*
NEL_RED*
RED_ENBL*
IR_ENBL*
U1 LP2951
+VIN VOUT
ERROR 5V
SD SENSE
GND FB
NC3
NC62
NC2
U3 TLC2272
C47 1 35V 10%
C9 0.0015
C48 0.01
C2 10 16V 20%
+5ISO
U14 7543
VREF VDD
RFB
IOUT1
IOUT2
NC
AGND
DGND
SRI
CLR*
-D1*
-D2*
STRB1
STRB2
STRB3*
STRB4
R3 10K
C46 0.01
POX_EN*
-.64VREF
SPI_MOSI
POX_CLK*
LOADDAC*
SPI_SCLK
SPI_CS3*

5 of 9

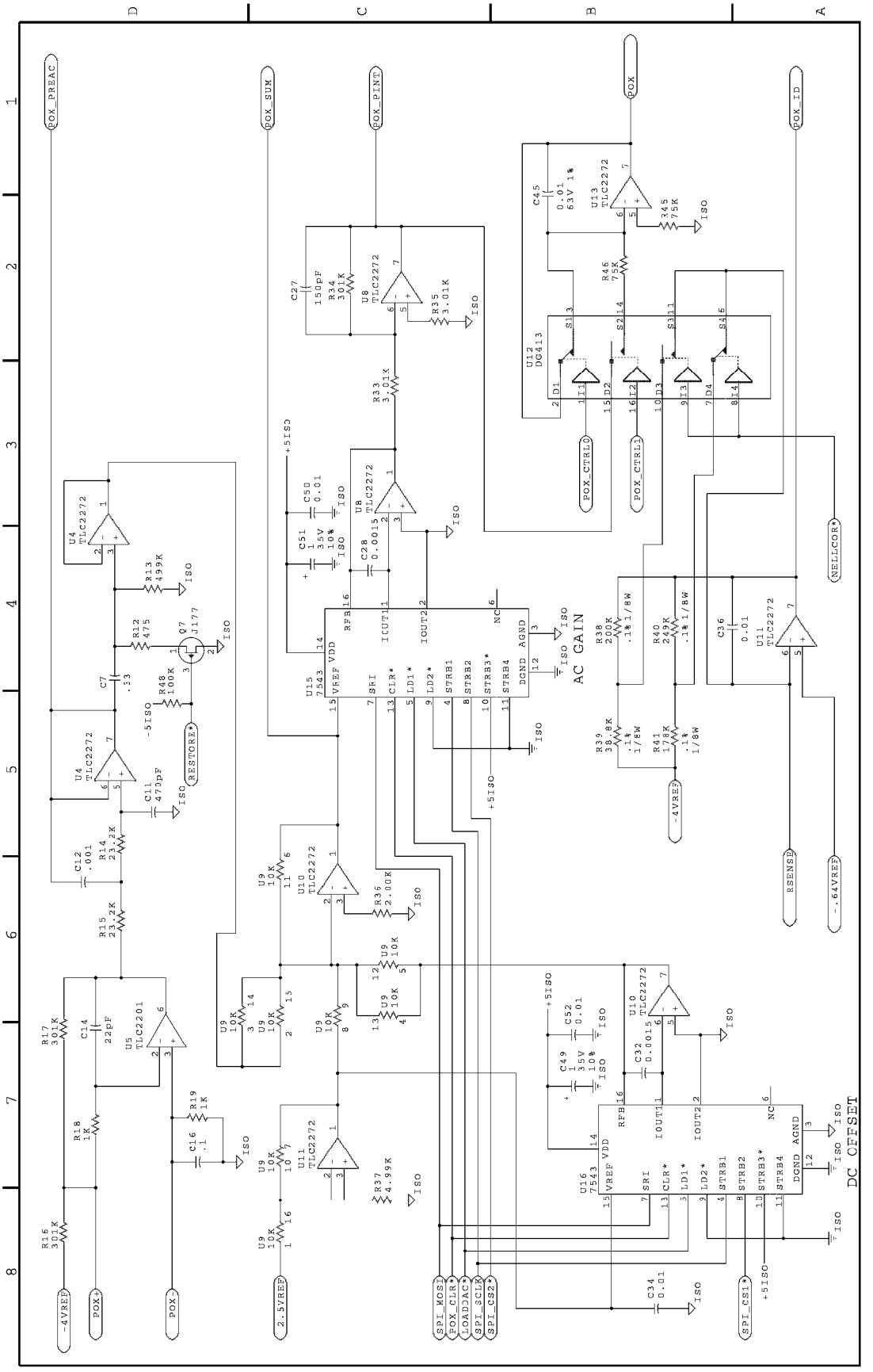
AC GAIN
DC OFFSET
POX_PREAC
POX_SUM
POX_PINT
POX
POX_ID
POX_CTRL0
POX_CTRL1
NELLCOR*
RESTORE*
RSENSE
-.64VREF
-4VREF
POX+
POX-
2.5VREF
SPI_MOSI
POX_CLR*
LOADDAC*
SPI_SCLK
SPI_CS2*
SPI_CS1*
+5ISO
-5ISO
ISO
U4 TLC2272
U5 TLC2201
U8 TLC2272
U9 10K
U10 TLC2272
U11 TLC2272
U12 DG413
U13 TLC2272
U15 7543
U16 7543
Q7 J177
R13 499K
R12 475
R48 100K
R14 23.2K
R15 23.2K
R16 301K
R17 301K
R18 1K
R19 1K
R36 2.00K
R37 4.99K
R35 3.01K
R33 3.01K
R34 301K
R46 75K
R45 75K
R38 200K
R40 249K
R39 38.3K
R41 178K
C7 .33
C11 470pF
C12 .001
C14 22pF
C16 .1
C27 150pF
C28 0.0015
C45 0.01 63V 1%
C50 0.01
C51 1 35V 10%
C52 0.01
C49 1 35V 10%
C32 0.0015
C34 0.01
C36 0.01
RFB
IOUT1
IOUT2
NC
VDD
VREF
SRI
CLR*
LD1*
LD2*
STRB1
STRB2
STRB3*
STRB4
DGND
AGND

6 of 9

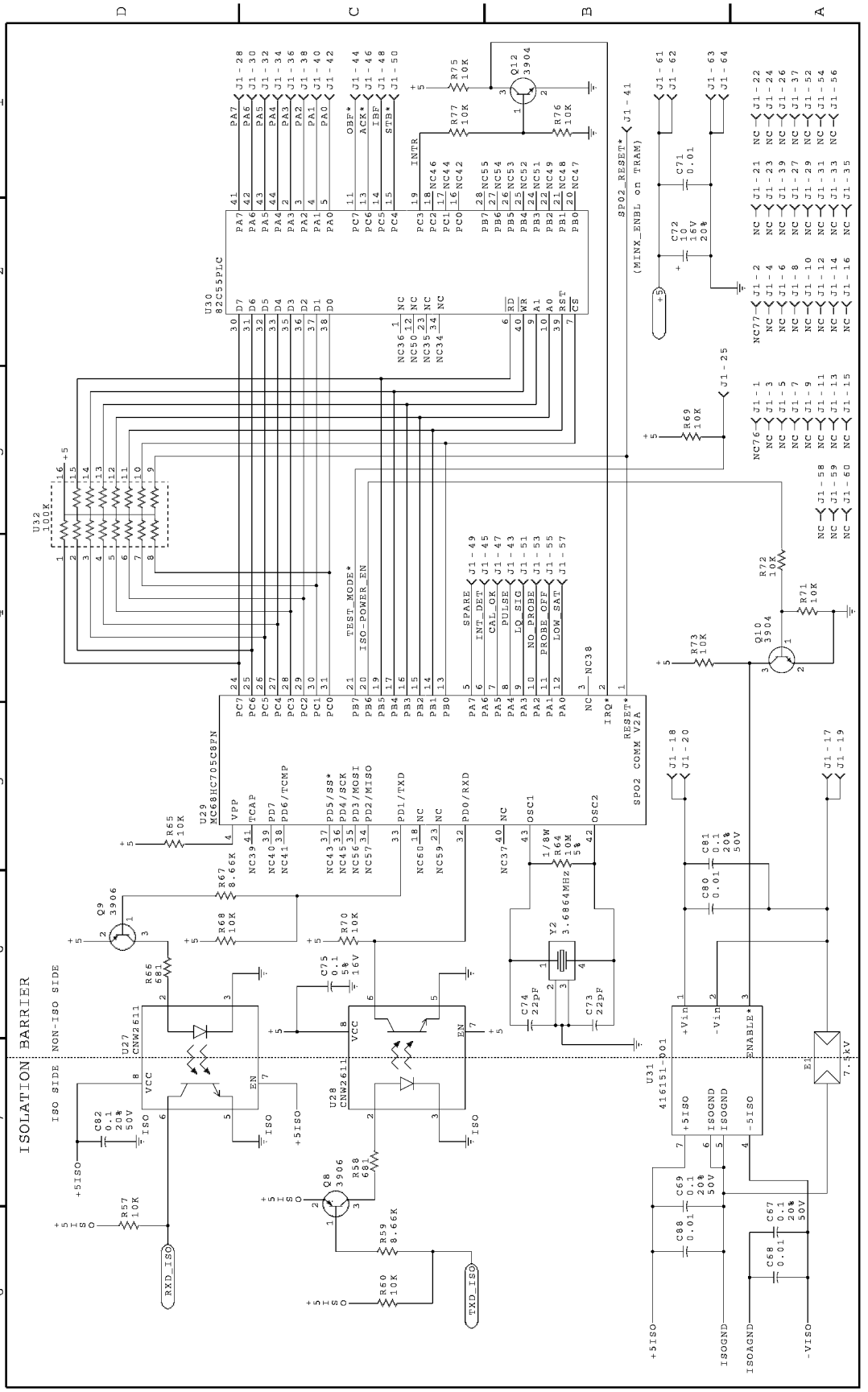
ISOLATION BARRIER
ISO SIDE
NON-ISO SIDE
U29 MC68HC705C8PN
U30 82C55PLC
U31 416151-001
U27 CNW2611
U28 CNW2611
U32 100K
Y2 3.6864MHz
SPO2 COMM V2A
SPO2_RESET*
(MINX_ENBL on TRAM)
TEST_MODE*
ISO-POWER_EN
SPARE
INT_DET
CAL_OK
PULSE
LO_SIG
NO_PROBE
PROBE_OFF
LOW_SAT
INTR
OBF*
ACK*
IBF
STB*
RXD_ISO
TXD_ISO
+5ISO
ISOGND
-VISO
7.5kV

7 of 9

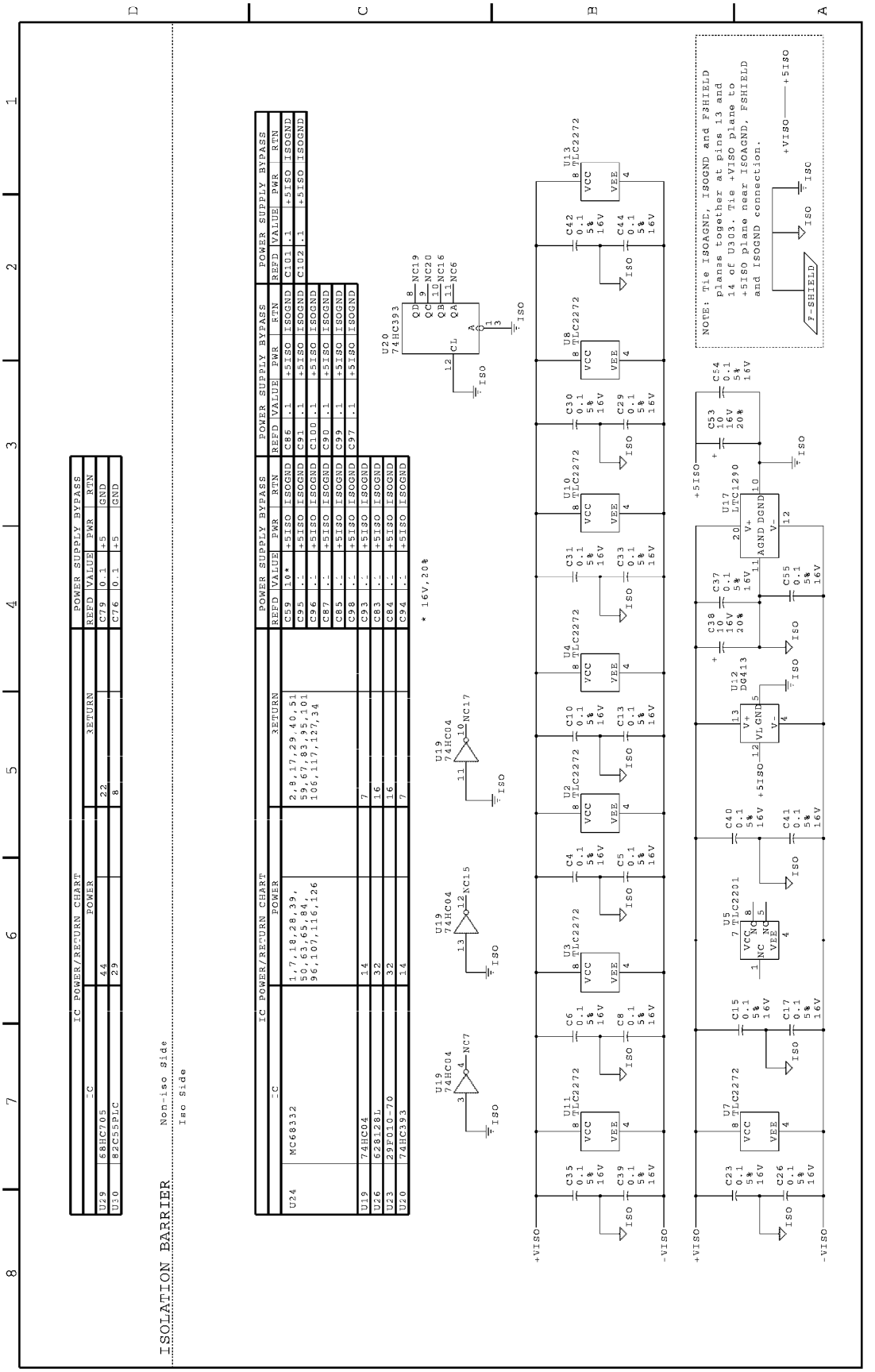
IC POWER/RETURN CHART
IC
POWER
RETURN
POWER SUPPLY BYPASS
REFD VALUE PWR RTN
U29 68HC705 44 22 C79 0.1 +5 GND
U30 82C55PLC 29 8 C76 0.1 +5 GND
U24 MC68332 1,7,18,28,39,50,63,65,84,96,107,116,126 2,8,17,29,40,51,59,67,83,95,101,106,117,127,34
C59 10* +5ISO ISOGND
C95 .1 +5ISO ISOGND
C96 .1 +5ISO ISOGND
C87 .1 +5ISO ISOGND
C85 .1 +5ISO ISOGND
C98 .1 +5ISO ISOGND
U19 74HC04 14 7 C93 .1 +5ISO ISOGND
U26 628128L 32 16 C83 .1 +5ISO ISOGND
U23 29F010-70 32 16 C84 .1 +5ISO ISOGND
U20 74HC393 14 7 C94 .1 +5ISO ISOGND
C86 .1 +5ISO ISOGND
C91 .1 +5ISO ISOGND
C100 .1 +5ISO ISOGND
C90 .1 +5ISO ISOGND
C99 .1 +5ISO ISOGND
C97 .1 +5ISO ISOGND
C101 .1 +5ISO ISOGND
C102 .1 +5ISO ISOGND
* 16V,20%
U20 74HC393
U19 74HC04
U11 TLC2272
U3 TLC2272
U2 TLC2272
U4 TLC2272
U10 TLC2272
U8 TLC2272
U13 TLC2272
U7 TLC2272
U5 TLC2201
U12 DG413
U17 LTC1290
NOTE: Tie ISOGND, ISOGND and FSHIELD planes together at pins 13 and 14 of U303. Tie +VISO plane to +5ISO plane near ISOGND, FSHIELD and ISOGND connection.
F-SHIELD
+VISO
-VISO
+5ISO
ISO
ISOLATION BARRIER
Non-iso Side
Iso Side

LABEL	PAGE COORDINATES
+5:	6-B2,B3,B4,B6,C1,C6,D3,D5,D6
+5ISO:	1-C7,D2,D7 2-A6,B3,B7,C3,D2,D4 3-B1,B2 4-B7,C7,D7 5-A8,B6,C3,C5,D5 6-B8,C7,C8,D7,D8 7-A1,A5,B3
+VDD_SYN:	1-D8 2-A4
+VISO:	3-A4,C3,C4,D8 7-A1,B8
-.64VREF:	3-B5,B8 4-C8 5-A6
-4VREF:	3-B8,C5 5-B5,D8
-VISO:	3-A2,C2,C3 6-A8 7-A8,B8
2.5VREF:	3-D7 5-C8
332_FLOAT:	1-A8 2-C4
4.5VREF:	3-B8,D4
A-D_IR:	3-D2 4-C2
A-D_RED:	3-D2 4-C2
A0:	1-C3,C5 2-D6,D7
A1:	1-C3,C5 2-D6,D7
A2:	1-C3,C5 2-D6,D7
A3:	1-C3,C5 2-D6,D7
A4:	1-C3,C5 2-D6,D7
A5:	1-C3,C5 2-D6,D7
A6:	1-C3,C5 2-C6,D7
A7:	1-C3,C5 2-C6,C7
A8:	1-C3,C5 2-C6,C7
A9:	1-C3,C5 2-C6,C7

LABEL	PAGE COORDINATES
A10:	1-C3,D5 2-C6,C7
A11:	1-C3,D5 2-C6,C7
A12:	1-C2,D5 2-C6,C7
A13:	1-C2,D5 2-C6,C7
A14:	1-C2,D5 2-C6,C7
A15:	1-C2,D5 2-C6,C7
A16:	1-C2,D5 2-C6,C7
A17:	1-C2,D5
A18:	1-C2,D5 2-C7
ACK*:	6-C1
AD_ACLK:	1-B2 3-D4
BERR*:	1-A8,B2 2-C2
CAL_OK:	6-B4
D0:	1-B5,C4
D1:	1-B5,D2
D2:	1-B5,D2
D3:	1-B5,D2
D4:	1-B5,D2
D5:	1-B5,D2
D6:	1-B5,D3
D7:	1-B5,D3
D8:	1-C5,D4 2-C5,D6
D9:	1-C5,D4 2-C5,D6
D10:	1-C5,D3 2-C5,D6
D11:	1-C5,D3 2-C5,D6
D12:	1-C5,D3 2-C5,D6
D13:	1-C5,D3 2-C5,D6
D14:	1-C5,D3 2-C5,D6
D15:	1-C5,D3 2-C5,C6

LABEL	PAGE COORDINATES
DSCLK:	1-B7 2-D2
DSI:	1-B7 2-D2
DSO:	1-B7 2-D2
EXTAL:	1-A8 2-B6
FLASH_CS*:	1-B8 2-B8
FLASH_WR*:	1-B8 2-B8
FREEZE:	1-C7 2-D2
HALT*:	1-B8,C2
IBF:	6-C1
INTR:	6-C1
INT_DET:	6-C4
IR_ENBL*:	1-B3,C8 4-A5
IR_LED:	3-C2 4-B2
ISO-POWER_EN:	6-C4
ISOAGND:	6-A8
ISOGND:	6-B8
LED_GREEN:	1-D5 2-B8
LED_RED:	1-D5 2-A8
LOADDAC*:	1-A5,C2 4-C8 5-C8
LOW_SAT:	6-B4
LQ_SIG:	6-B4
MODCK:	1-B2,B8
NELLCOR*:	1-D5 5-A4
NEL_IR*:	1-C8 4-C5
NEL_RED*:	1-C8 4-C5
NO_PROBE:	6-B4
OBF*:	6-C1
OHM/NEL*:	1-B5 3-B1

LABEL	PAGE COORDINATES
PA0:	6-C1
PA1:	6-C1
PA2:	6-C1
PA3:	6-C1
PA4:	6-C1
PA5:	6-C1
PA6:	6-C1
PA7:	6-D1
POX:	3-D2 5-B1
POX+:	3-C2 5-D8
POX-:	3-C3 5-D8
POX_CLR*:	1-A5,B2 4-C8 5-C8
POX_CTRL0:	1-B4,C8 5-B3
POX_CTRL1:	1-B4,C8 5-B3
POX_EN*:	1-B8 4-D8
POX_ID:	3-C2 5-A1
POX_ID0:	1-D1,D8
POX_ID1:	1-D1,D8
POX_PINT:	3-D2 5-C1
POX_PREAC:	3-D2 5-D1
POX_PWR:	3-C2 4-D2
POX_SUM:	3-C2 5-C1
PRB_SENSE*:	1-B5 3-B1
PROBE_OFF:	6-B4
PULSE:	6-B4
RD/WR*:	1-B4 2-B8
RED_ENBL*:	1-B4,C8 4-B5
RED_LED:	3-B2 4-C2

PULSE OXIMETRY PCB: Schematic Diagram PN SD800674-003A

LABEL	PAGE COORDINATES
RESET*:	1-B8 2-B1,C2
RESTORE*:	1-A5 5-D5
RSENSE:	3-B2 5-A6
RXD_ISO:	1-C8 6-D8
SP02_RESET*:	6-B2
SPARE:	6-C4
SPI_CS0*:	1-C8 3-D4
SPI_CS1*:	1-C8 5-A8
SPI_CS2*:	1-C8 5-C8
SPI_CS3*:	1-C8 4-B8
SPI_MISO:	1-C8 3-D4
SPI_MOSI:	1-C8 3-D4 4-C8 5-C8
SPI_SCLK:	1-C8 3-D4 4-B8 5-C8
SRAM_CS*:	1-B8 2-C8
SRAM_CS2:	1-B2 2-C8
STB*:	6-C1
TEST_MODE*:	6-C4
TXD_ISO:	1-C8 6-C8
WR/RD*:	1-A4 2-B8
XTAL:	1-A8 2-B6

REFDES	PAGE COORDINATES
U1:	4-D6
U2:	4-C3 7-B5
U3:	4-C5,C6 7-B6
U4:	5-D4,D5 7-B4
U5:	5-D7 7-B6
U6:	3-D8
U7:	3-B6,C6 7-B7
U8:	5-C2,C4 7-B3
U9:	5-C6,C7,C8,D7
U10:	5-B7,C6 7-B4
U11:	5-A4,C7 7-B7
U12:	5-B3 7-B5
U13:	3-D6 5-B2 7-B2
U14:	4-C7
U15:	5-C5
U16:	5-B8
U17:	3-D3 7-B4
U18:	1-C3
U19:	1-A4 2-A7,B8 7-C5,C6,C7,C8
U20:	1-B3 7-C3,C8
U21:	1-C3
U22:	1-D3
U23:	2-D5 7-C8
U24:	1-D7 7-C8
U25:	2-B2
U26:	2-D7 7-C8
U27:	6-D7
U28:	6-C7

REFDES	PAGE COORDINATES
U29:	6-D5 7-D8
U30:	6-D2 7-D8
U31:	6-B7
U32:	6-D4
U33:	3-A4

CONNECTOR	SIGNAL
J1-17:	06030065
J1-18:	06054054
J1-19:	06030065
J1-20:	06054054
J1-25:	TEST_MODE*
J1-28:	PA7
J1-30:	PA6
J1-32:	PA5
J1-34:	PA4
J1-36:	PA3
J1-38:	PA2
J1-40:	PA1
J1-41:	SP02_RESET*
J1-42:	PA0
J1-43:	PULSE
J1-44:	OBF*
J1-45:	INT_DET
J1-46:	ACK*
J1-47:	CAL_OK
J1-48:	IBF
J1-49:	SPARE
J1-50:	STB*
J1-51:	LQ_SIG
J1-53:	NO_PROBE
J1-55:	PROBE_OFF
J1-57:	LOW_SAT
J1-61:	+5
J1-62:	+5
J1-63:	GND
J1-64:	GND

CONNECTOR	SIGNAL
J2-1:	POX-
J2-2:	POX+
J2-3:	POX-
J2-4:	FSHIELD
J2-5:	POX_PWR
J2-6:	FSHIELD
J2-7:	IR_LED
J2-8:	FSHIELD
J2-9:	RED_LED
J2-10:	FSHIELD
J2-11:	RSENSE
J2-12:	FSHIELD
J2-13:	03067043
J2-14:	FSHIELD
J2-15:	03067046
J2-16:	FSHIELD
J2-17:	03067053
J2-18:	FSHIELD
J2-19:	ISOGND
J2-20:	FSHIELD
J3-2:	BERR*
J3-3:	ISOGND
J3-4:	DSCLK
J3-5:	ISOGND
J3-6:	FREEZE
J3-7:	RESET*
J3-8:	DSI
J3-9:	02086029
J3-10:	DSO
J4-1:	ISOAGND
J4-2:	-4VREF
J4-3:	-.64VREF
J4-4:	4.5VREF

Assembly Revisions PN 800674

The current baseline revision for this assembly is pn 800674-003A. Earlier versions of this assembly are presented later in this chapter. To convert the parts list, pn 800674-001A/002B, back to a previous revision, change all part numbers, descriptions, and quantities as indicated in the revision tables given below.

PN 800674-001A				
Reference Designation	**Description**	**Revision's Part Number**	**Baseline Part Number**	**Qty**
U23	EEPROM, Flash Memory, Tram SpO_2	414474-001	414474-003	1
Use SD800674-002 schematic diagram except for U29 and Y2 are different as noted in this parts list.)				

Parts Location Diagram PN 800674-001A/002B

1 of 2

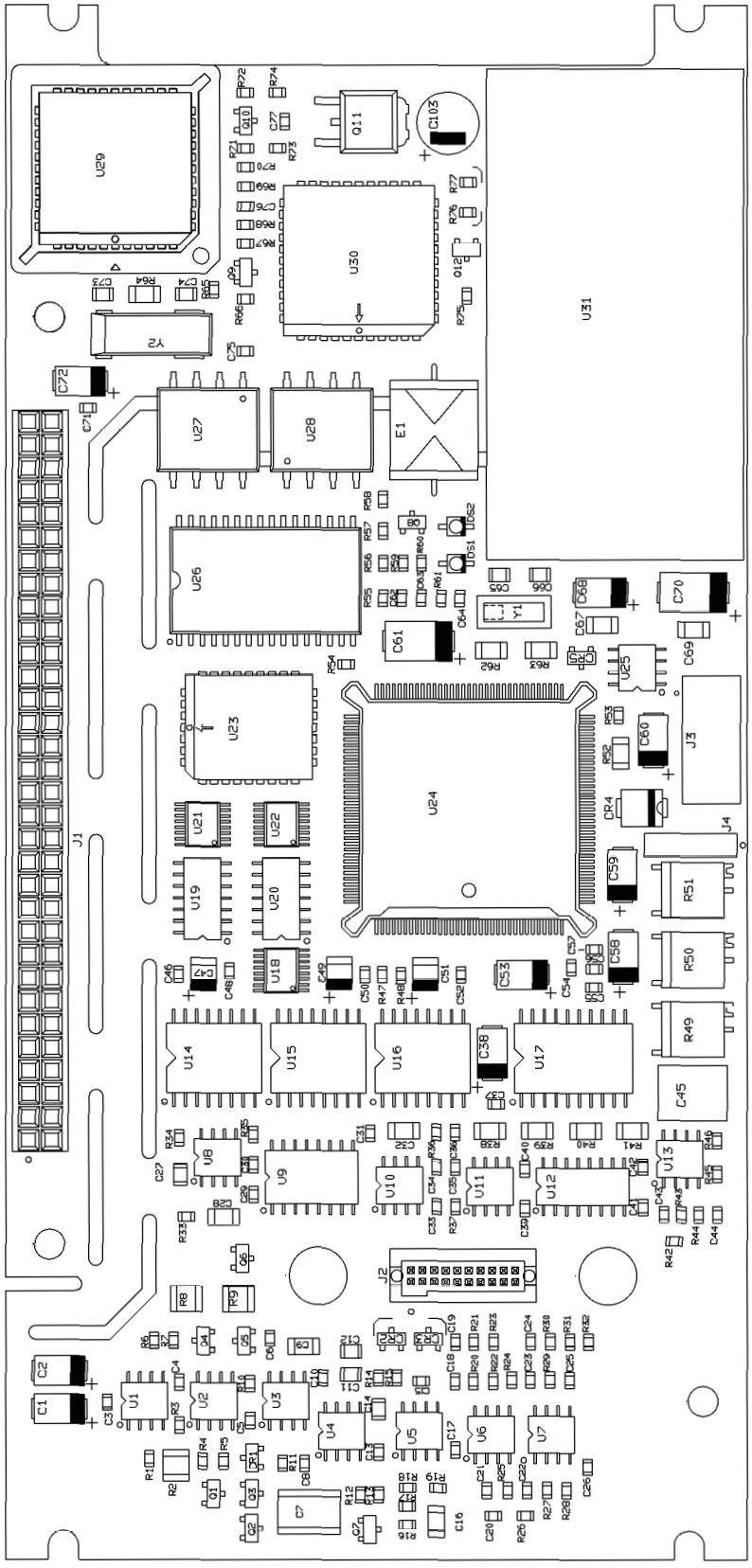

2 of 2

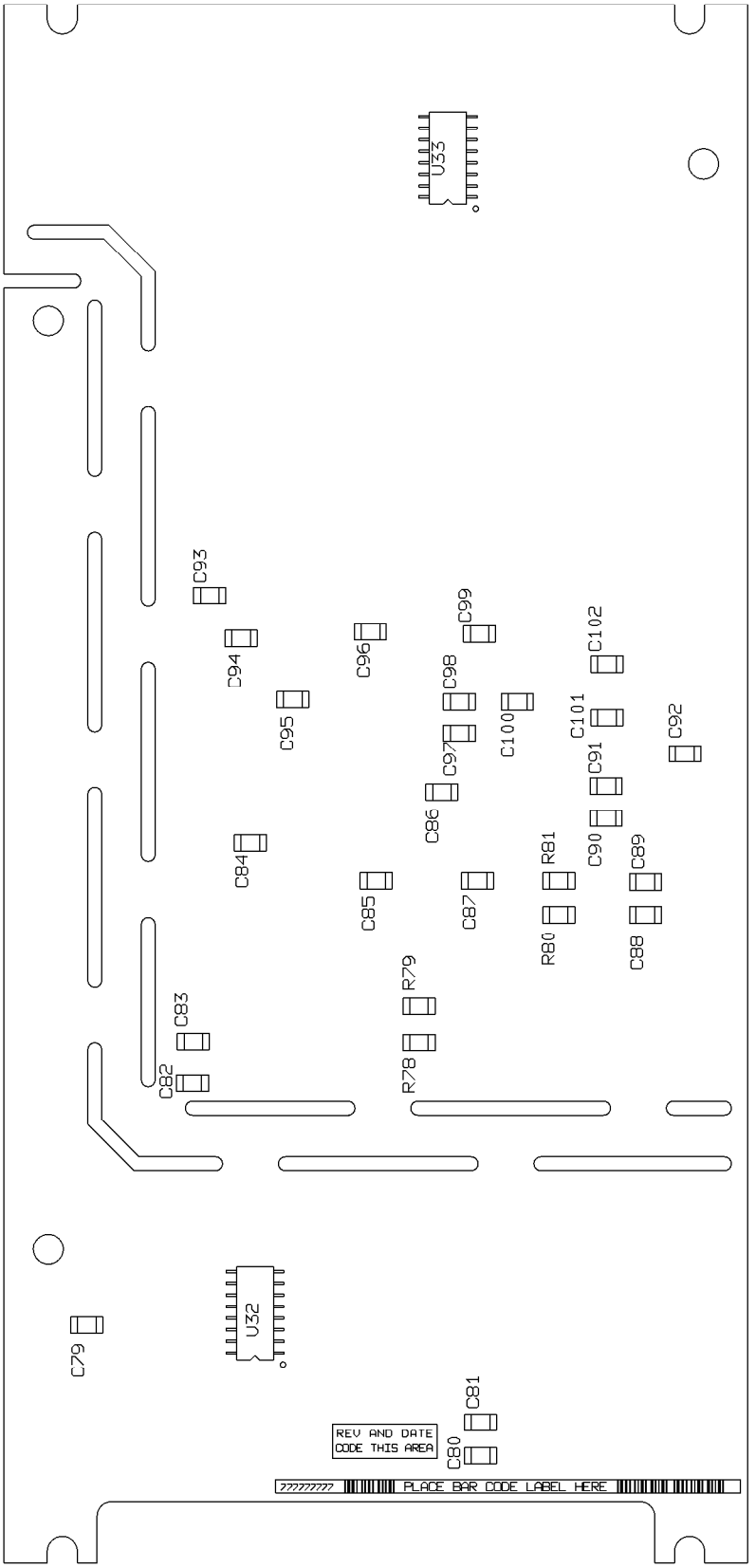
U33
C93
C94
C95
C84
C83
C82
C79
U32
C96
C85
C86
C97
C98
C99
C87
R79
R78
C100
R81
R80
C101
C102
C91
C90
C92
C89
C88
C81
C80
REV AND DATE
CODE THIS AREA
PLACE BAR CODE LABEL HERE

Parts List PN 800674-001A/002B

Item	Parts List	Part Number	Qty
C1, 2, 38, 53, 58-60, 68, 72	Cap, Tant, 10µF, 20%, 16V, SM	1176-106	9
C3, 20, 22, 24, 25, 34, 36, 43, 46, 48, 50, 52, 57, 62, 71, 77	Cap, Cer, 0.1µF, 5%, 50V	411575-012	16
C4-6, 8, 10, 13, 15, 17-19, 21, 23, 26, 29-31, 33, 35, 37, 39, 40-42, 44, 54-56, 63, 64, 75, 76	Cap, Cer, 0.1µF, 5%, 16V	411575-002	31
C7	Cap, Cer, 0.33µF, 5%, 50V	1181-334	1
C9, 28, 32	Cap, Cer, 0.0015µF, 5%, SM	1181-152	3
C11	Cap, Cer, 470pF, 5%, 50V, SM	1181-471	1
C12	Cap, Cer, 0.001µF, 5%, 50V, SM	1181-102	1
C14, 65, 66, 73, 74	Cap, Cer, 22pF, 5%, 50V, SM	1181-220	5
C16	Cap, Cer, 0.1µF, 5%, 50V, SM	1182-104	1
C27	Cap, Cer, 150pF, 5%, 50V, SM	1181-151	1
C45	Cap, PP, 0.01µF, 1%, 63V	408822-001	1
C47, 49, 51	Cap, Tant, 1.0µF, 10%, 35V, SM	403907-001	3
C61	Cap, Tant, 47µF, 20%, 10V, SM	405585-001	1
C70	Cap, Tant, 22µF, 10%, 25V, SM	407653-001	1
C67, 69, 79, 81-87, 89-102	Cap, Cer, 0.1µF, 20%, 50V	404370-001	24
C80, 88	Cap, Cer, 0.01µF, 5%, 50V, SM	400265-001	2
C103	Cap, Al, 100µF, 20%, 25V	401722-001	1
CR1	Diode, SM MMAD4148	401980-001	1
CR2, 3	Diode, SM FDSO1503	2414-001	2
CR4	Diode, Schottky, Barrier, 1A, 40V, SM MBRS140T3	403187-001	1
CR5	Diode, Schottky, SM BAT54	401985-001	1
DS1	Diode, Light-Emitting (Green)	401429-003	1
DS2	Diode, Light-Emitting (Red)	401429-001	1
E1	Surge Protector, 7.5kV, ±15%	1931-001	1
J1	Connector, PC Header, 64-Pin	1847-064	1
J2	Connector, PC Header, 20-Pin, SM	413053-002	1
J3	PC Post, 2 x 5-Pin	413864-001	1
J4	PC Post, 1 x 4-Pin	413864-002	1
Q1, 4	Transistor, PNP, SM T2907A	405759-001	2
Q2, 5	Transistor, NPN, SM MMBT222	404927-001	2
Q3, 6	Transistor, MOSFET, N-Channel, Enhancement Mode, SM VN0605T	406267-001	2
Q7	Transistor, JFET, P-Channel, SM MMBFJ117	404417-001	1
Q8, 9	Transistor, PNP, SM T3906	2511-101	2
Q10, 12	Transistor, NPN, SM T3904	2511-001	2

Item	Parts List	Part Number	Qty
Q11	Transistor, HEXFET, P-Channel, 25W, SM IRFR9010TR	406513-001	1
R1, 7, 48	Res, Cer, 100K, 1%, 1/16W, SM	410334-019	3
R2, 8, 9	Res, Cer, 10.0K, 1%, 1/4W	407468-002	3
R3, 11, 20-23, 27, 28, 30, 32, 43, 47, 53-55, 57, 60, 65, 68-77	Res, Cer, 10K, 1%, 1/16W, SM	410334-013	28
R4-6, 10	Res, Cer, 4.75K, 1%, 1/16W, SM	410334-010	4
R12	Res, Cer, 475Ω, 1%, 1/16W, SM	410334-064	1
R13	Res, Cer, 499K, 1%, 1/16W, SM	410334-072	1
R14, 15	Res, Cer, 23.2K, 1%, 1/16W, SM	410334-069	2
R16, 17, 34	Res, Cer, 301K, 1%, 1/16W, SM	410334-071	3
R18, 19, 56	Res, Cer, 1K, 1%, 1/16W, SM	410334-008	3
R24	Res, Cer, 150Ω, 1%, 1/16W, SM	410334-028	1
R25, 29, 42, 61	Res, Cer, 100Ω, 1%, 1/16W, SM	410334-003	4
R26	Res, Cer, 16.5K, 1%, 1/16W, SM	410334-068	1
R31	Res, Cer, 38.3K, 1%, 1/16W, SM	410334-047	1
R33, 35	Res, Cer, 3.01K, 1%, 1/16W, SM	410334-018	2
R36	Res, Cer, 2K, 1%, 1/16W, SM	410334-009	1
R37	Res, Cer, 4.99K, 1%, 1/16W, SM	410334-066	1
R38	Res, Cer, 200K, 0.1%, 1/8W, SM	1067-832	1
R39	Res, Cer, 38.8K, 0.1%, 1/8W, SM	1067-388	1
R40	Res, Cer, 248K, 0.1%, 1/8W, SM	1067-249	1
R41	Res, Cer, 178K, 0.1%, 1/8W, SM	1067-849	1
R44	Res, Cer, 11.5K, 1%, 1/16W, SM	410334-014	1
R45, 46	Res, Cer, 75K, 1%, 1/16W, SM	410334-063	2
R49, 50, 51	Res, Var, 2K, Side Adjust, SM	409023-003	3
R52	Res, Cer, 1.5K, 1%, 1/8W, SM	1082-768	1
R58, 66	Res, Cer, 681Ω, 1%, 1/16W, SM	410334-065	2
R59, 67	Res, Cer, 8.66K, 1%, 1/16W, SM	410334-067	2
R62	Res, Cer, 20M, 1%, 1/8W, SM	1081-510	1
R63	Res, Cer, 332K, 1%, 1/8W, SM	1082-874	1
R64	Res, Cer, 10M, 5%, 1/8W, SM	1081-106	1
R78, 79	Res, 340 Ω, 1%, 1/8W, SM	1082-790	2
R80, 81	Res, Cer, 10K, 1%, 1/8W, SM	1082-104	2
U1	Volt Rgltr, Adj, SM LP2951A	3076-001	1
U2-4, 7, 8, 10, 11, 13	Operational Ampl, Dual, SM TLC2272	412809-001	8
U5	Operational Ampl, SM TLC2201	403385-002	1
U6	Voltage Reference, 2.5V, SM AD680	410736-001	1
U9	Res, Ntwk, 10K, 0.1%, SM	405134-001	1
U12	Analog Switch, SPST, CMOS, Quad DG413	408821-001	1
U14-16	DAC, 12-Bit, SM 7543	405439-001	3
U17	Data Acquisition, SM LTC1290	405948-002	1
U18, 21, 22	Res, Ntwk, 100K	1049-203	3
U19	Inverter, Hex, SM HC04	3038-004	1

Item	Parts List	Part Number	Qty
U20	Counter, Binary, 4-Bit, Dual, SM HC393	3038-393	1
U23	EEPROM, Flash Memory, Tram SpO_2 (For -001 Only)	414474-001	1
U23	EEPROM, Flash Memory, Tram SpO_2 (For -002 Only)	414474-003	1
U24	Microcontroller, 16-MHz, SM 68332	408794-001	1
U25	Sensor, Undervoltage, 4.6V, SM MC34064D5	408952-001	1
U26	RAM, Static, 128K x 8-Bit, 70nS, SM 628128	406255-002	1
U27, 28	Isolator, Optically Coupled, SM 2611	408825-001	2
U29	EPROM, Tram SpO_2 Communication	414443-001	1
U30	Programmable Peripheral Interface, PLCC 82C55A	404697-001	1
U31	Converter, DC-to-DC, Isolated, ±5V	413655-002	1
U32	Res Ntwk, 100K, SM	1061-104	1
U33	Diode Pair Array, ESD/Overvoltage Protection, SM	412586-001	1
Y1	Crystal, 31.2kHz, SM	408946-001	1
Y2	Crystal Oscillator, 2.4576-MHz, SM (For -001 Only)	411514-001	1
Y2	Crystal Oscillator, 3.6864-MHz, SM (For -002 Only)	408828-001	1
-	Socket, PLCC, 44-Pin, SM (For U29)	402412-001	1
-	Circuit Board (For -001 Only)	800675-001A	1
-	Circuit Board (For -002 Only)	800675-002A	1
-	Schematic Diagram (For -001 Only; Use -002 schematic diagram except for U29 and Y2 are different as noted in this parts list.)	SD8000674-001A	
-	Schematic Diagram (For -002 Only)	SD8000674-002A	

Schematic Diagram PN SD800674-002A

1 of 9

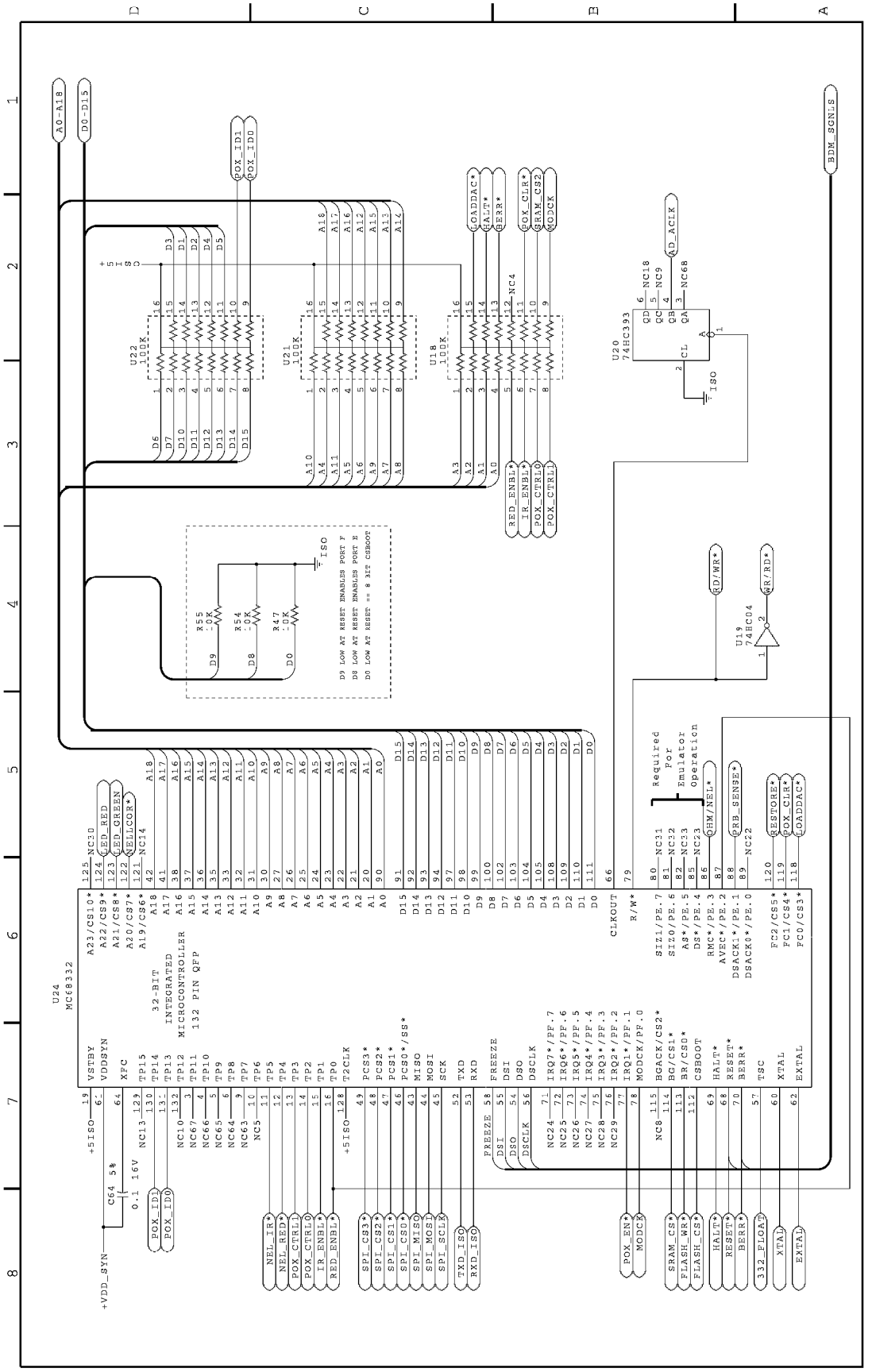

2 of 9

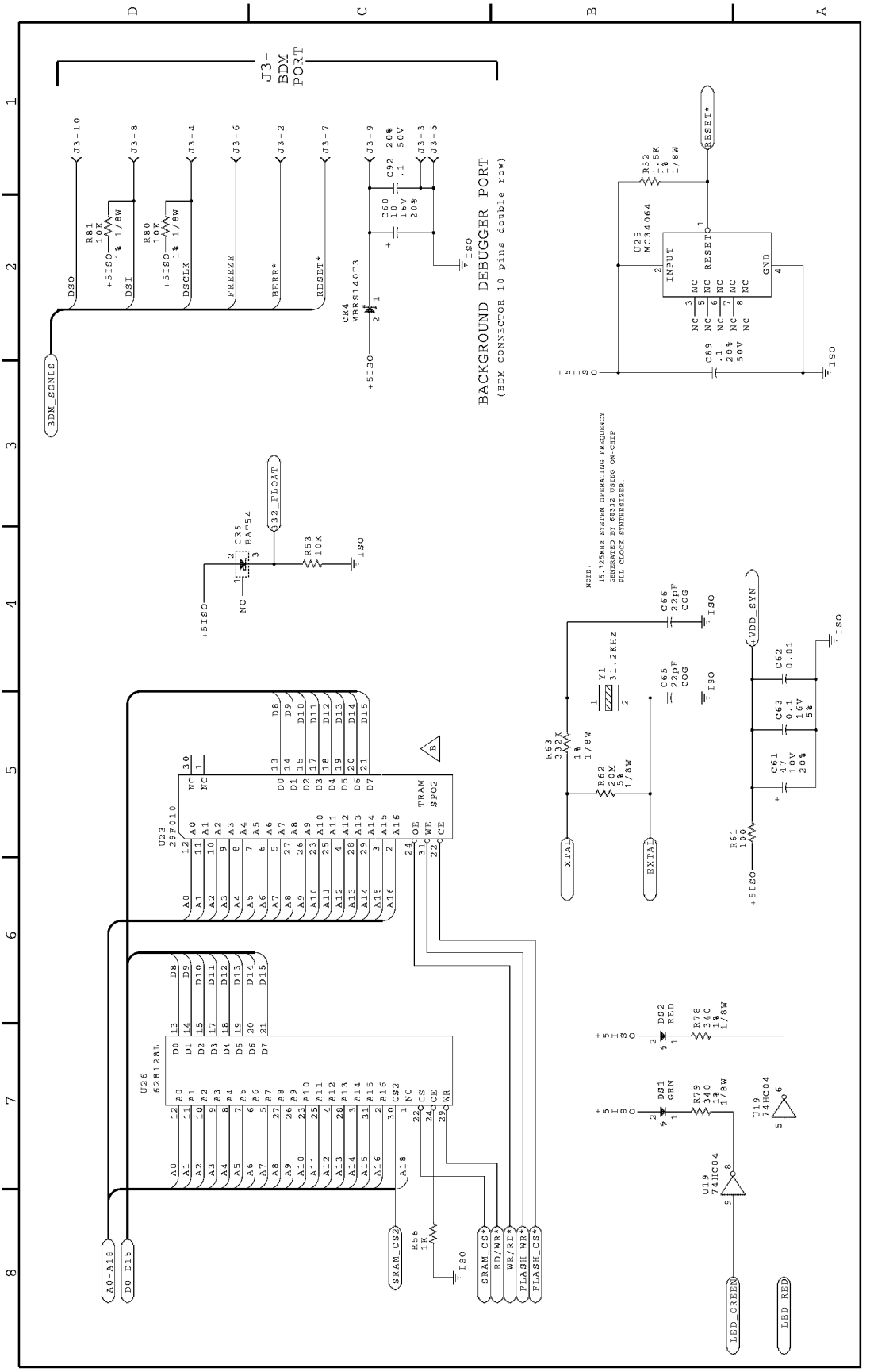
J3-
BDM
PORT
BACKGROUND DEBUGGER PORT
(BDM CONNECTOR 10 pins double row)
BDM_SGNLS
DSO
DSI
DSCLK
FREEZE
BERR*
RESET*
R81
10K
1%
1/8W
R80
10K
1%
1/8W
C60
10
16V
20%
C92
.1
20%
50V
CR4
MBRS140T3
U25
MC34064
INPUT
RESET
GND
R32
1.5K
1%
1/8W
C89
.1
20%
50V
CR5
BAT54
R53
10K
32_FLOAT
NOTE:
15.725MHz SYSTEM OPERATING FREQUENCY
GENERATED BY 68332 USING ON-CHIP
PLL CLOCK SYNTHESIZER.
C66
22pF
COG
C65
22pF
COG
Y1
31.2KHz
R63
332K
1%
1/8W
R62
20M
5%
1/8W
XTAL
EXTAL
VDD_SYN
C62
0.01
C63
0.1
16V
5%
C61
47
10V
20%
R61
100
U33
27F010
U26
628128L
TRAM
SPO2
A0-A16
D0-D15
GRAM_CS2
R56
1K
SRAM_CS*
RD/WR*
WR/RD*
FLASH_WR*
FLASH_CS*
D82
RED
R78
340
1%
1/8W
D81
GRN
R79
340
1%
1/8W
U19
74HC04
LED_GREEN
LED_RED

3 of 9

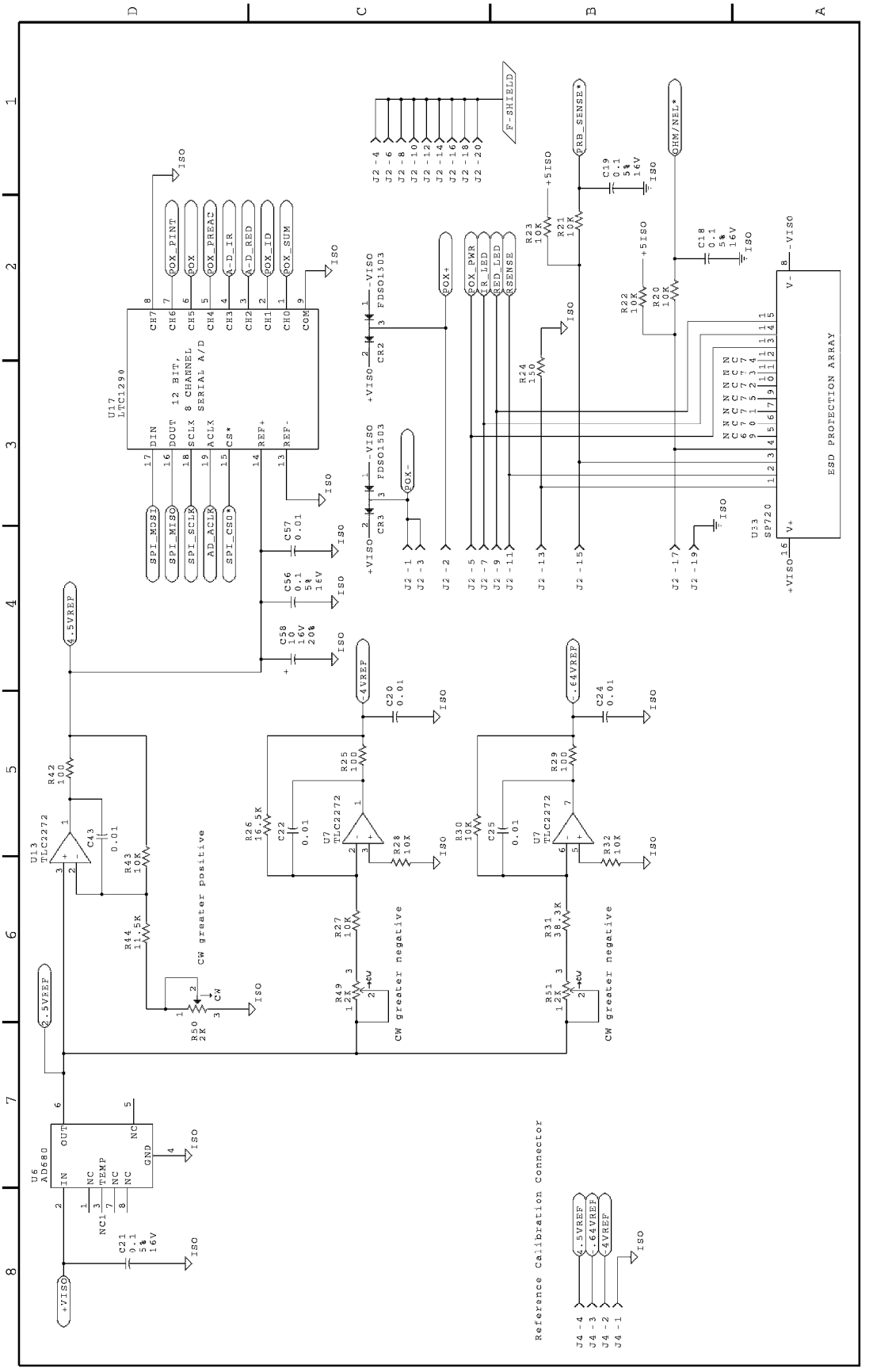
U17
LTC1290
12 BIT,
8 CHANNEL
SERIAL A/D
DIN
DOUT
SCLK
ACLK
CS*
REF+
REF-
CH7
CH6
CH5
CH4
CH3
CH2
CH1
CH0
COM
SPI_MOSI
SPI_MISO
SPI_SCLK
AD_ACLK
SPI_CSO*
POX_PINT
POX
POX_PREAC
A-D_IR
A-D_RED
POX_ID
POX_SUM
ISO
C57
0.01
C56
0.1
5%
16V
C58
10
16V
20%
+4.5VREF
+.4VREF
-.64VREF
C20
0.01
C24
0.01
U13
TLC2272
C43
0.01
R42
100
R43
10K
R44
11.5K
R50
2K
CW
CW greater positive
R25
100
R26
16.5K
C22
0.01
U7
TLC2272
R28
10K
R27
10K
R49
12K
CW greater negative
R29
100
R30
10K
C25
0.01
R32
10K
R31
38.3K
R51
12K
+2.5VREF
U6
AD680
IN
OUT
NC
TEMP
GND
C21
0.1
5%
16V
+VISO
J2-4
J2-6
J2-8
J2-10
J2-12
J2-14
J2-16
J2-18
J2-20
F-SHIELD
POX+
POX-
POX_PWR
IR_LED
RED_LED
RSENSE
CR2
CR3
FDS01503
-VISO
R24
150
R23
10K
R21
10K
PRB_SENSE*
C19
0.1
5%
16V
+5ISO
CHM/NEL*
R22
10K
R20
10K
C18
0.1
5%
16V
U33
SP720
ESD PROTECTION ARRAY
V-
V+
J2-1
J2-3
J2-5
J2-7
J2-9
J2-11
J2-13
J2-15
J2-17
J2-19
Reference Calibration Connector
J4-4
J4-3
J4-2
J4-1

4 of 9

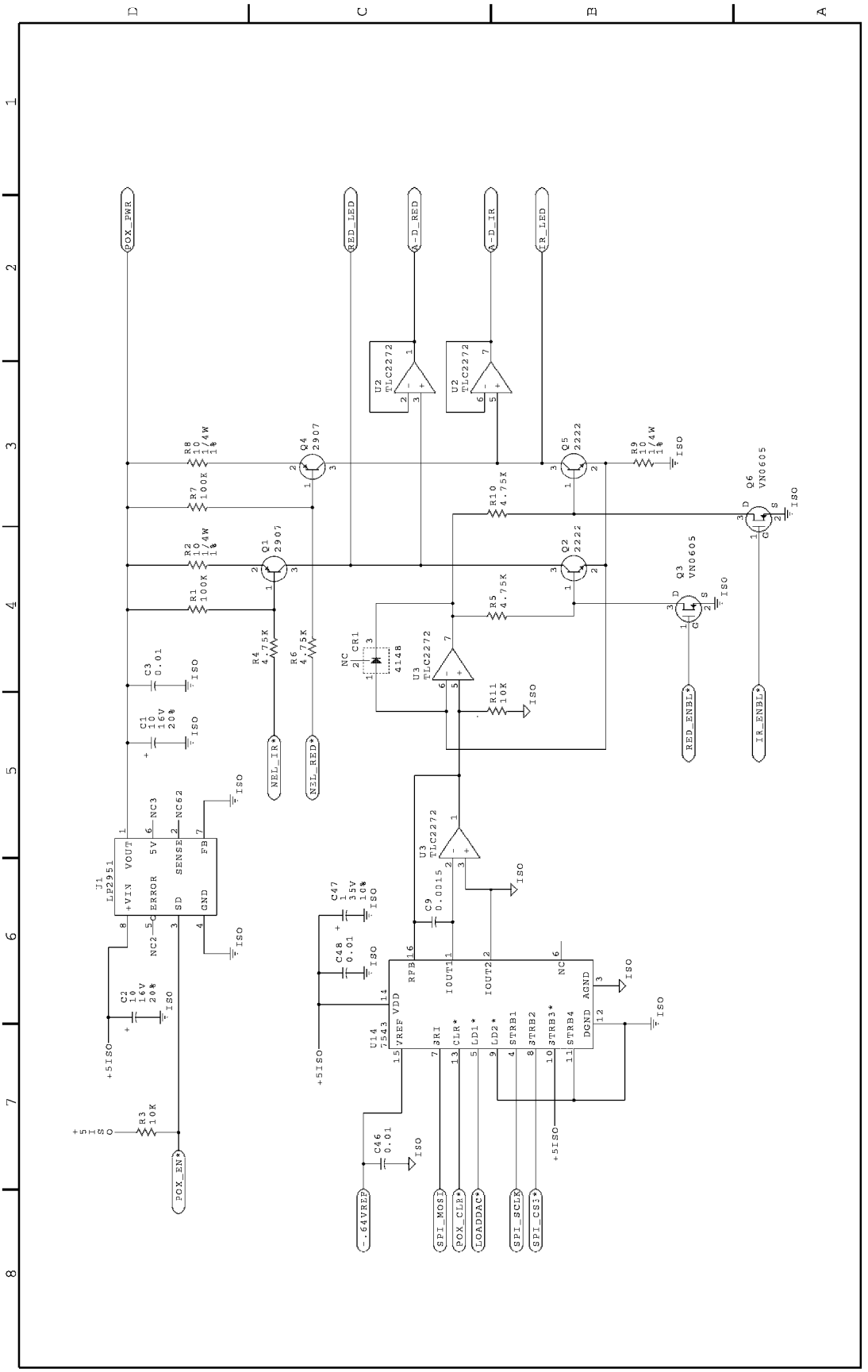
POX_PWR
RED_LED
A-D_RED
A-D_IR
IR_LED
U2 TLC2272
R8 10 1/4W 1%
R7 100K
R2 10 1/4W 1%
R1 100K
Q4 2907
Q1 2907
Q5 2222
Q2 2222
R9 10 1/4W 1%
R10 4.75K
R5 4.75K
Q6 VN0605
Q3 VN0605
R4 4.75K
R6 4.75K
NC CR1 4148
U3 TLC2272
R11 10K
C3 0.01
C1 10 16V 20%
NEL_IR*
NEL_RED*
RED_ENBL*
IR_ENBL*
J1 LP2951
+VIN VOUT 5V NC3 NC62 ERROR SENSE SD FB GND NC2
C2 10 16V 20%
+5ISO
R3 10K
POX_EN*
C47 1 35V 10%
C48 0.01
C9 0.0015
U14 TL543
VREF VDD RFB IOUT1 IOUT2 NC AGND DGND
STRB1 STRB2 STRB3* STRB4
C46 0.01
-.64VREF
SPI_MOSI
POX_CLR*
LOADDAC*
SPI_SCLK
SPI_CS1*
ISO

5 of 9

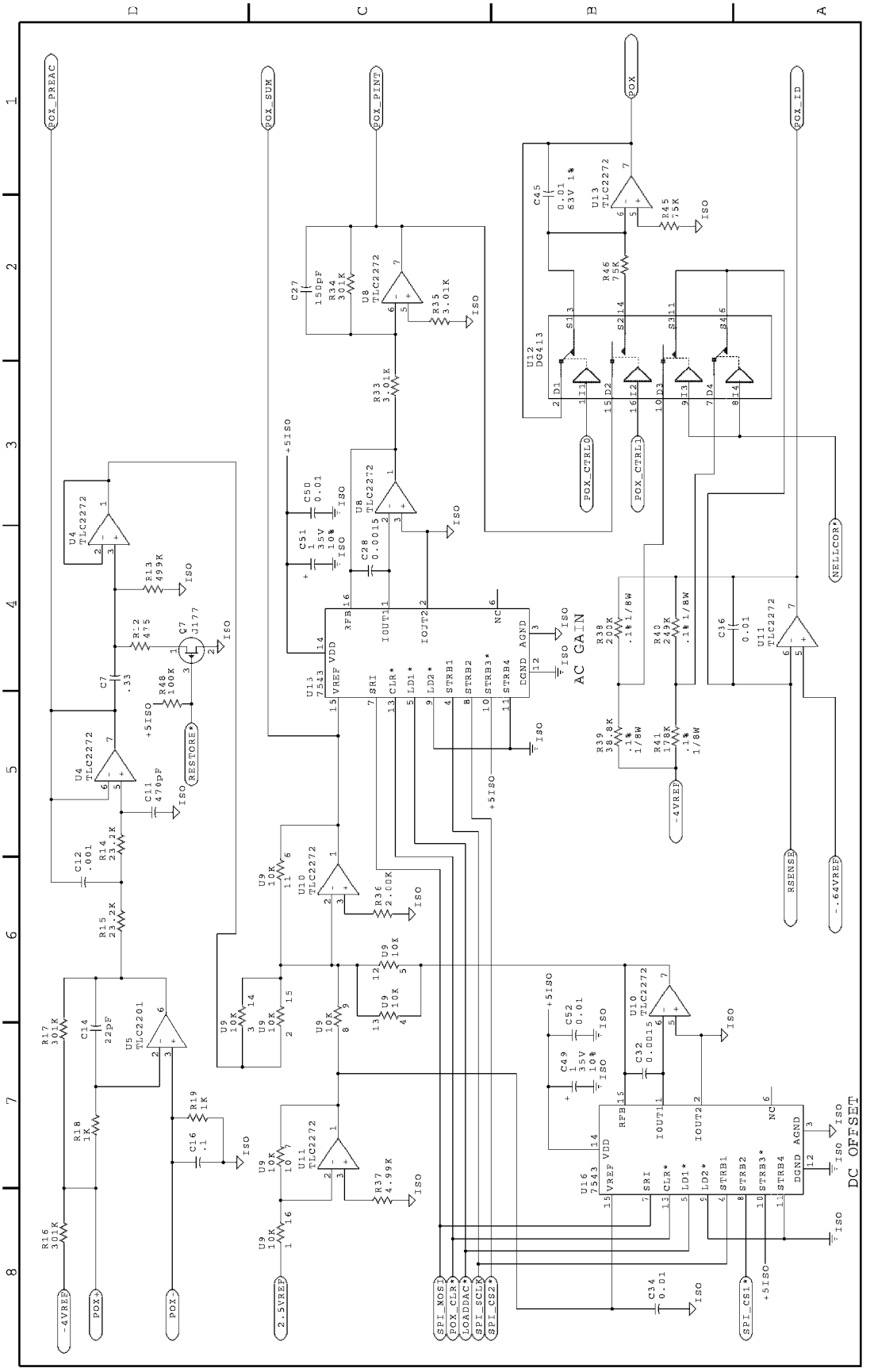
AC GAIN
DC OFFSET
POX_PREAC
POX_SUM
POX_PINT
POX
POX_ID
POX_CTRL0
POX_CTRL1
NELLCOR*
RESTORE*
RSENSE
-.64VREF
-4VREF
POX+
POX-
2.5VREF
GPI_MOSI
POX_CLR*
LOADDAC*
GPI_SCLK
GPI_CS2*
GPI_CS1*
+5ISO
ISO
U4 TLC2272
U5 TLC2201
U8 TLC2272
U9 10K
U10 TLC2272
U11 TLC2272
U12 DG413
U13 TLC2272
U15 7543
U16 7543
R13 499K
R14 23.2K
R15 23.2K
R16 301K
R17 301K
R18 1K
R19 1K
R33 3.01K
R34 301K
R35 3.01K
R36 2.00K
R37 4.99K
R38 200K
R39 38.8K
R40 249K
R41 178K
R45 75K
R46 75K
R48 100K
C7 .33
C11 470pF
C12 .001
C14 22pF
C16 .1
C27 150pF
C28 0.0015
C32 0.0015
C34 0.01
C36 0.01
C45 0.01 63V 1%
C49 1 35V 10%
C50 0.01
C51 1 35V 10%
C52 0.01
Q177

6 of 9

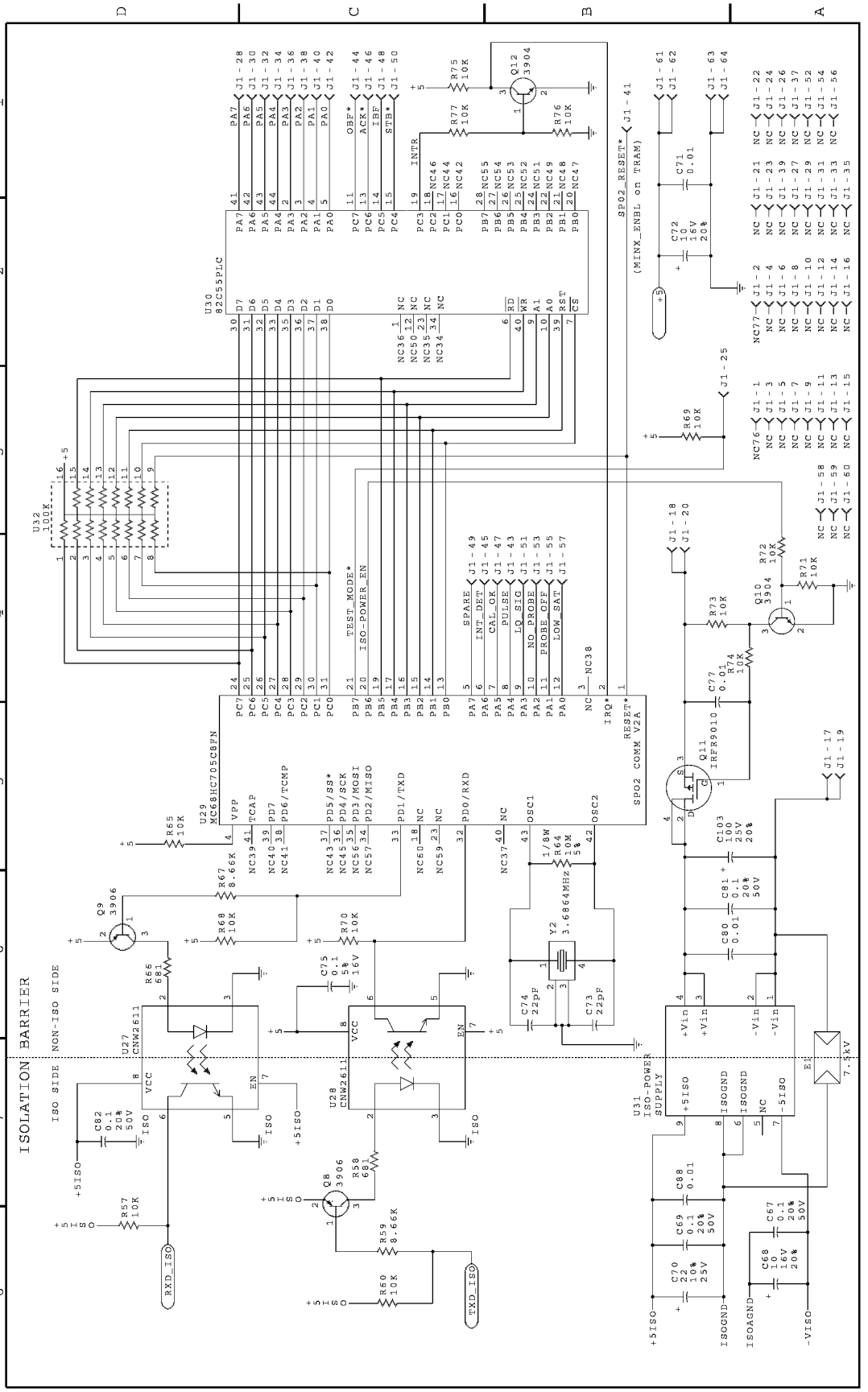
ISOLATION BARRIER
ISO SIDE
NON-ISO SIDE
U29 MC68HC705C8PN
U30 82C55PLC
U31 ISO POWER SUPPLY
U27 CNW2611
U28 CNW2611
U32 100K
Q11 IRFR9010
Y2 3.6864MHz
SPO2 COMM V2A
SPO2_RESET*
(MINX_ENBL on TRAM)
TEST_MODE*
ISO-POWER_EN
SPARE
INT_DET
CAL_OK
PULSE
LO_SIG
NO_PROBE
PROBE OFF
LOW_SAT
RXD_ISO
TXD_ISO
ISOGND
-VISO
7.5kV

7 of 9

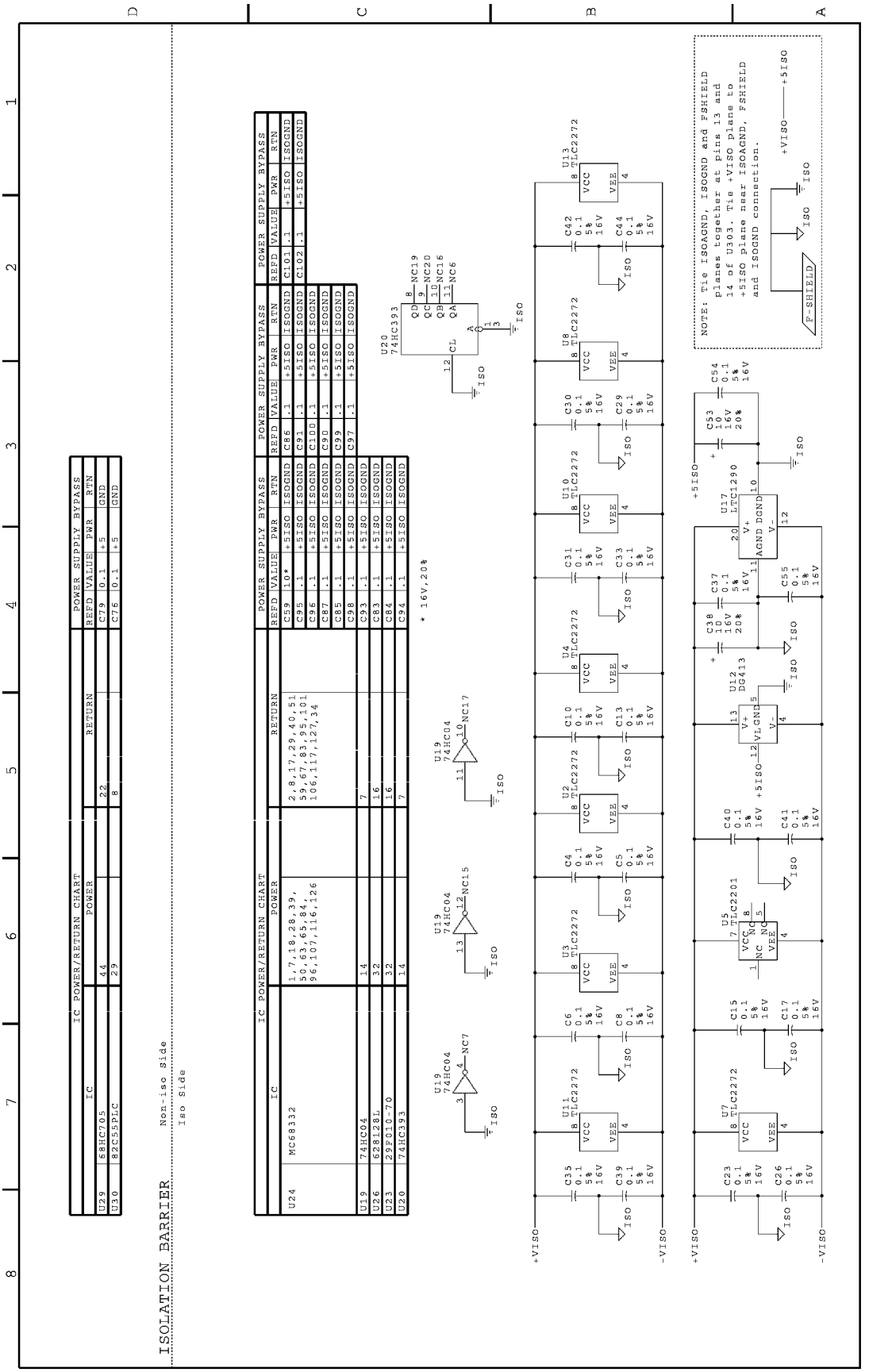
ISOLATION BARRIER
Non-iso Side
Iso Side
IC POWER/RETURN CHART
IC POWER/RETURN CHART
POWER SUPPLY BYPASS
NOTE: Tie ISOAGND, ISOGND and FSHIELD planes together at pins 13 and 14 of U303. Tie +VISO plane to +5ISO plane near ISOAGND, FSHIELD and ISOGND connection.
F-SHIELD
* 16V,20%

LABEL	PAGE COORDINATES
+5:	6-B2,B3,B6,C1,C6,D3,D5,D6
+5ISO:	1-C7,D2,D7 2-A6,B3,B7,C3,D2,D4 3-B1,B2 4-B7,C7,D7 5-A8,B6,C3,C5,D5 6-B8,C7,C8,D7,D8 7-A1,A5,B3
+VDD_SYN:	1-D8 2-A4
+VISO:	3-A4,C3,C4,D8 7-A1,B8
-.64VREF:	3-B5,B8 4-C8 5-A6
-4VREF:	3-B8,C5 5-B5,D8
-VISO:	3-A2,C2,C3 6-A8 7-A8,B8
2.5VREF:	3-D7 5-C8
332_FLOAT:	1-A8 2-C4
4.5VREF:	3-B8,D4
A-D_IR:	3-D2 4-C2
A-D_RED:	3-D2 4-C2
A0:	1-C3,C5 2-D6,D7
A1:	1-C3,C5 2-D6,D7
A2:	1-C3,C5 2-D6,D7
A3:	1-C3,C5 2-D6,D7
A4:	1-C3,C5 2-D6,D7
A5:	1-C3,C5 2-D6,D7
A6:	1-C3,C5 2-C6,D7
A7:	1-C3,C5 2-C6,C7
A8:	1-C3,C5 2-C6,C7
A9:	1-C3,C5 2-C6,C7

LABEL	PAGE COORDINATES
A10:	1-C3,D5 2-C6,C7
A11:	1-C3,D5 2-C6,C7
A12:	1-C2,D5 2-C6,C7
A13:	1-C2,D5 2-C6,C7
A14:	1-C2,D5 2-C6,C7
A15:	1-C2,D5 2-C6,C7
A16:	1-C2,D5 2-C6,C7
A17:	1-C2,D5
A18:	1-C2,D5 2-C7
ACK*:	6-C1
AD_ACLK:	1-B2 3-D4
BERR*:	1-A8,B2 2-C2
CAL_OK:	6-B4
D0:	1-B5,C4
D1:	1-B5,D2
D2:	1-B5,D2
D3:	1-B5,D2
D4:	1-B5,D2
D5:	1-B5,D2
D6:	1-B5,D3
D7:	1-B5,D3
D8:	1-C5,D4 2-C5,D6
D9:	1-C5,D4 2-C5,D6
D10:	1-C5,D3 2-C5,D6
D11:	1-C5,D3 2-C5,D6
D12:	1-C5,D3 2-C5,D6
D13:	1-C5,D3 2-C5,D6
D14:	1-C5,D3 2-C5,D6
D15:	1-C5,D3 2-C5,C6

LABEL	PAGE COORDINATES
DSCLK:	1-B7 2-D2
DSI:	1-B7 2-D2
DSO:	1-B7 2-D2
EXTAL:	1-A8 2-B6
FLASH_CS*:	1-B8 2-B8
FLASH_WR*:	1-B8 2-B8
FREEZE:	1-C7 2-D2
HALT*:	1-B8,C2
IBF:	6-C1
INTR:	6-C1
INT_DET:	6-C4
IR_ENBL*:	1-B3,C8 4-A5
IR_LED:	3-C2 4-B2
ISO-POWER_EN:	6-C4
ISOAGND:	6-A8
ISOGND:	6-B8
LED_GREEN:	1-D5 2-B8
LED_RED:	1-D5 2-A8
LOADDAC*:	1-A5,C2 4-C8 5-C8
LOW_SAT:	6-B4
LQ_SIG:	6-B4
MODCK:	1-B2,B8
NELLCOR*:	1-D5 5-A4
NEL_IR*:	1-C8 4-C5
NEL_RED*:	1-C8 4-C5
NO_PROBE:	6-B4
OBF*:	6-C1
OHM/NEL*:	1-B5 3-B1

LABEL	PAGE COORDINATES
PA0:	6-C1
PA1:	6-C1
PA2:	6-C1
PA3:	6-C1
PA4:	6-C1
PA5:	6-C1
PA6:	6-C1
PA7:	6-D1
POX:	3-D2 5-B1
POX+:	3-C2 5-D8
POX-:	3-C3 5-D8
POX_CLR*:	1-A5,B2 4-C8 5-C8
POX_CTRL0:	1-B4,C8 5-B3
POX_CTRL1:	1-B4,C8 5-B3
POX_EN*:	1-B8 4-D8
POX_ID:	3-C2 5-A1
POX_ID0:	1-D1,D8
POX_ID1:	1-D1,D8
POX_PINT:	3-D2 5-C1
POX_PREAC:	3-D2 5-D1
POX_PWR:	3-C2 4-D2
POX_SUM:	3-C2 5-C1
PRB_SENSE*:	1-B5 3-B1
PROBE_OFF:	6-B4
PULSE:	6-B4
RD/WR*:	1-B4 2-B8
RED_ENBL*:	1-B4,C8 4-B5
RED_LED:	3-B2 4-C2

PULSE OXIMETRY PCB: Schematic Diagram PN SD800674-002A

LABEL	PAGE COORDINATES
RESET*:	1-B8 2-B1,C2
RESTORE*:	1-A5 5-D5
RSENSE:	3-B2 5-A6
RXD_ISO:	1-C8 6-D8
SP02_RESET*:	6-B2
SPARE:	6-C4
SPI_CS0*:	1-C8 3-D4
SPI_CS1*:	1-C8 5-A8
SPI_CS2*:	1-C8 5-C8
SPI_CS3*:	1-C8 4-B8
SPI_MISO:	1-C8 3-D4
SPI_MOSI:	1-C8 3-D4 4-C8 5-C8
SPI_SCLK:	1-C8 3-D4 4-B8 5-C8
SRAM_CS*:	1-B8 2-C8
SRAM_CS2:	1-B2 2-C8
STB*:	6-C1
TEST_MODE*:	6-C4
TXD_ISO:	1-C8 6-C8
WR/RD*:	1-A4 2-B8
XTAL:	1-A8 2-B6

REFDES	PAGE COORDINATES
U1:	4-D6
U2:	4-C3 7-B5
U3:	4-C5,C6 7-B6
U4:	5-D4,D5 7-B4
U5:	5-D7 7-B6
U6:	3-D8
U7:	3-B6,C6 7-B7
U8:	5-C2,C4 7-B3
U9:	5-C6,C7,C8,D7
U10:	5-B7,C6 7-B4
U11:	5-A4,C7 7-B7
U12:	5-B3 7-B5
U13:	3-D6 5-B2 7-B2
U14:	4-C7
U15:	5-C5
U16:	5-B8
U17:	3-D3 7-B4
U18:	1-C3
U19:	1-A4 2-A7,B8 7-C5,C6,C7,C8
U20:	1-B3 7-C3,C8
U21:	1-C3
U22:	1-D3
U23:	2-D5 7-C8
U24:	1-D7 7-C8
U25:	2-B2
U26:	2-D7 7-C8
U27:	6-D7
U28:	6-C7

REFDES	PAGE COORDINATES
U29:	6-D5 7-D8
U30:	6-D2 7-D8
U31:	6-B7
U32:	6-D4
U33:	3-A4

CONNECTOR	SIGNAL
J1-17:	06030065
J1-18:	06054054
J1-19:	06030065
J1-20:	06054054
J1-25:	TEST_MODE*
J1-28:	PA7
J1-30:	PA6
J1-32:	PA5
J1-34:	PA4
J1-36:	PA3
J1-38:	PA2
J1-40:	PA1
J1-41:	SP02_RESET*
J1-42:	PA0
J1-43:	PULSE
J1-44:	OBF*
J1-45:	INT_DET
J1-46:	ACK*
J1-47:	CAL_OK
J1-48:	IBF
J1-49:	SPARE
J1-50:	STB*
J1-51:	LQ_SIG
J1-53:	NO_PROBE
J1-55:	PROBE_OFF
J1-57:	LOW_SAT
J1-61:	+5
J1-62:	+5
J1-63:	GND
J1-64:	GND

CONNECTOR	SIGNAL
J2-1:	POX-
J2-2:	POX+
J2-3:	POX-
J2-4:	FSHIELD
J2-5:	POX_PWR
J2-6:	FSHIELD
J2-7:	IR_LED
J2-8:	FSHIELD
J2-9:	RED_LED
J2-10:	FSHIELD
J2-11:	RSENSE
J2-12:	FSHIELD
J2-13:	03067043
J2-14:	FSHIELD
J2-15:	03067046
J2-16:	FSHIELD
J2-17:	03067053
J2-18:	FSHIELD
J2-19:	ISOGND
J2-20:	FSHIELD
J3-2:	BERR*
J3-3:	ISOGND
J3-4:	DSCLK
J3-5:	ISOGND
J3-6:	FREEZE
J3-7:	RESET*
J3-8:	DSI
J3-9:	02086029
J3-10:	DSO
J4-1:	ISOAGND
J4-2:	-4VREF
J4-3:	-.64VREF
J4-4:	4.5VREF

For your notes