Solar® 9500
Information Monitor
Service Manual

Software Version 3

2001085-061 Revision A

GE Medical Systems
Information Technologies

gemedicalsystems.com

NOTE: Due to continuing product innovation, specifications in this manual are subject to change without notice.

Contents

1

Introduction 1-1

Manual Information 1-2
Revision History 1-2
Manual Purpose 1-2
Intended Audience 1-2

Safety Information 1-3
Responsibility of the Manufacturer 1-3
General 1-3
Warnings, Cautions, and Notes 1-4
Equipment Symbols 1-5

Service Information 1-6
Service Requirements 1-6
Equipment Identification 1-6

2

Overview 2-1

The Solar 9500 Information Monitor 2-2
Front View 2-3
Rear View 2-3
Interconnection 2-4

Technical Specifications 2-5

Supported Devices 2-9

3

Installation 3-1

System Components 3-2

Processing Unit Setup 3-3
Mounting 3-4
Installing Cable Shroud 3-5

Display Descriptions 3-6
Primary Display 3-6
Secondary Display 3-6
Remote Display 1, 2 3-6
Touchscreen Interface 3-7

Scrolling vs. Non-scrolling Waveforms 3-7
Browser Support 3-7

Processing Unit/Display Interconnection 3-8
Flat Panel Display Interconnection 3-9
Display Mounting 3-9

Acquisition Interfaces 3-10
Tram-rac Housing 3-10
Tram-rac Power Supply Connection 3-11
Processing Unit/Tram-rac Interconnection 3-11
Tram-rac 2 Housing 3-11
Tram-rac 4A Housing 3-12
Unity Network ID Connectivity Device 3-12
Dual Tram-rac Housings 3-13
About Tram-net 3-14
Processing Unit/RAMS Interconnection 3-15

Processing Unit/Polled Parameter Interconnection 3-16

Local Area Network (LAN) Interfaces 3-17
About Ethernet 3-17
Twisted Pair 3-18
Network Terms 3-19

Printer Interconnect 3-20
Laser Printer 3-20
PRN 50 Digital Writer 3-22
Connecting to the Unity Network MC Network 3-23
Connecting to the Unity Network IX Network 3-24

Keyboard and Mouse 3-25

Turning Power On 3-26

Turning Power Off 3-27
Using the Menu Command 3-27
Alternate Power Down Method 3-27

4

Software Configuration 4-1

Monitor Service Menu 4-2
Layout Controls 4-3
Display/Layout Setup 4-4
Unit Defaults 4-7
Printing 4-12
Controls and Menu Timeouts 4-14
Module Calibration 4-15
Bed/Unit Name Setup 4-15
Serial Interface Controls 4-16
Network Services 4-17
Unix Access 4-17
IP Address 4-18
Time and Date 4-20
Audio 4-21
Diagnostic Messages 4-21
Locale Settings 4-22

Creating a Custom Layout 4-23
Editing Basics for All Customizable Windows 4-23
Display Features 4-24
An Overview of Configured Windows 4-25
Creating A Bed Layout 4-26
Sample Creation of a Simple Bed Layout 4-29
Print System Settings 4-31
Stratification 4-32

5

Module Calibration 5-1

General 5-2

The Service Menu 5-3

Calibrate Non-invasive Blood Pressure (NBP) 5-5
About the Procedure 5-5
Manufacturer Recommendation 5-5
Test Equipment 5-5
Calibration Procedure 5-6

Calibrate Mainstream CO2 5-9
About the Procedure 5-9
Manufacturer Recommendation 5-9
Test Equipment 5-9
Calibration Procedure 5-9
0% CO2 Calibration 5-10
10% CO2 Calibration 5-11
Calibration Completion 5-11

Calibrate Sidestream CO2 5-12
About the Procedure 5-12
Manufacturer Recommendation 5-12
Test Equipment 5-12
Calibration Procedure 5-12
0% CO2 Calibration 5-13
10% CO2 Calibration 5-14
Calibration Completion 5-14

Calibrate Barometric Pressure for Interfaced CO2 5-15
About the Procedure 5-15
Procedure 5-15

6

Maintenance 6-1

Maintenance Schedule 6-2
Manufacturer Recommendations 6-2
Manufacturer Responsibility 6-2

Visual Inspection 6-3

Cleaning 6-4
Cleaning Precautions 6-4
Exterior Cleaning 6-4
Cleaning the Touch Screen Display 6-4
Cleaning Inside the Solar 9500 CPU 6-5

Battery Pack Maintenance 6-6
Battery Pack Replacement 6-6
Battery Recycling 6-8

NLX Motherboard Battery Replacement 6-9

Electrical Safety Tests 6-10
General 6-10
Power Outlet Test 6-11
Ground (Earth) Integrity 6-11
Ground (Earth) Wire Leakage Current Tests 6-13
Enclosure Leakage Current Test 6-14
Patient (Source) Leakage Current Test 6-15
Patient (Sink) Leakage Current Test
(Mains Voltage on the Applied Part) 6-16
Test Completion 6-17

Checkout Procedure 6-18
Required Tools/Special Equipment 6-18
Initial Power Up 6-18
Touch Screen Check 6-19
Speaker Check 6-19

Tram-rac Housing Check 6-19
Tram-net Communication Check 6-20
Unity Network MC Network Check 6-21
Weblink Access Check (optional feature) 6-21
Printer Check (printer optional) 6-21
Unity Network ID Check 6-21
M-Port Check 6-22
Completion 6-22
PM Form 6-22

Repair Log 6-23

7

Troubleshooting 7-1

Fault Isolation 7-2
First Things to Ask 7-2
Visual Inspection 7-2
Main Power and Display Power 7-4

Fuse Replacement 7-7

AC Line Voltage Test 7-9
120 VAC, 50/60 Hz 7-9
240 VAC, 50/60 Hz 7-9

Troubleshooting Procedure 7-10
Service Menu 7-10
Diagnostic Messages 7-11
Log File Types 7-12
Log File Timestamps 7-12

Diagnosing System Problems with Houston 7-13
General 7-13
Houston Main Menu 7-13
Overview of the Menu Items 7-14
Navigating Multi-page Output 7-21

8 Theory of Operation 8-1

Overview 8-2

Processing Unit Operation 8-2

Subassemblies 8-3
Power Supply Assembly 8-3
Video PCB 8-5
Riser Interface PCB 8-7
Riser I/O PCB 8-9
M-Port PCB 8-9

Signal Descriptions 8-11
Power Supply PCB Connectors 8-11
Video PCB Connectors 8-14
Riser Interface PCB Connectors 8-17
Riser I/O PCB Connectors 8-32
M-Port PCB Connectors 8-33

9 Field Replaceable Units, Parts Lists and Drawings 9-1

Ordering Parts 9-2

Field Replaceable Units 9-2

Disassembly/Assembly 9-3
Opening the Unit for Service 9-3
Replace the Power Supply Assembly 9-4
Replace the NLX Motherboard 9-6
Replace Riser I/O PCB Assembly 9-7
Replace/Add Video PCB or M-Port PCB Assembly 9-8
Replace NLX Riser Interface PCB Assembly 9-10
Replace the Hard Drive 9-11

Upper Level Assembly 901007-003A 9-18

Power Supply Assembly 419080-001B 9-22

1 Introduction

Manual Information

Revision History

Each page of this manual has the document part number and revision letter at the bottom of the page. The revision letter identifies the document's update level. The revision history of this document is summarized below.

Revision History		
Revision	**Date**	**Comment**
A	20 January 2003	Initial release of this manual.

Manual Purpose

This manual supplies technical information for service representatives and technical personnel so they can maintain the equipment to the assembly level. Use it as a guide for maintenance and electrical repairs considered field repairable. Where necessary the manual identifies additional sources of relevant information and technical assistance.

See the operator's manual for the instructions necessary to operate the equipment safely in accordance with its function and intended use.

Intended Audience

This manual is intended for service representatives and technical personnel who maintain, troubleshoot, or repair this equipment.

Safety Information

Responsibility of the Manufacturer

GE Medical Systems *Information Technologies* is responsible for the effects of safety, reliability, and performance only if:

- Assembly operations, extensions, readjustments, modifications, or repairs are carried out by persons authorized by GE.
- The electrical installation of the relevant room complies with the requirements of the appropriate regulations.
- The equipment is used in accordance with the instructions for use.

General

This device is intended for use under the direct supervision of a licensed health care practitioner.

This device is not intended for home use.

U.S. law restricts this device to be sold by or on the order of a physician.

Contact GE Medical Systems *Information Technologies* for information before connecting to the equipment any devices that are not recommended in this manual.

Parts and accessories used must meet the requirements of the applicable IEC 601 series safety standards, and/or the system configuration must meet the requirements of the IEC 60601-1-1 medical electrical systems standard.

Periodically, and whenever the integrity of the device is in doubt, test all functions.

The use of ACCESSORY equipment not complying with the equivalent safety requirements of this equipment may lead to a reduced level of safety of the resulting system. Consideration relating to the choice shall include:

- use of the accessory in the PATIENT VICINITY; and
- evidence that the safety certification of the ACCESSORY has been performed in accordance to the appropriate IEC 60601-1 and/or IEC 60601-1-1 harmonized national standard.

If the installation of the equipment, in the USA, will use 240V rather than 120V, the source must be a center-tapped, 240V, single-phase circuit.

Warnings, Cautions, and Notes

The terms danger, warning, and caution are used throughout this manual to point out hazards and to designate a degree or level or seriousness. Familiarize yourself with their definitions and significance.

Hazard is defined as a source of potential injury to a person.

DANGER indicates an imminent hazard which, if not avoided, will result in death or serious injury.

WARNING indicates a potential hazard or unsafe practice which, if not avoided, could result in death or serious injury.

CAUTION indicates a potential hazard or unsafe practice which, if not avoided, could result in minor personal injury or product/property damage.

NOTE provides application tips or other useful information to assure that you get the most from your equipment.

Equipment Symbols

Some of the following symbols appear on the equipment.

ATTENTION: Consult accompanying documents before using the equipment.

In Europe, this symbol means dangerous or high voltage. In the United States, this symbol represents the caution notice below:

To reduce the risk of electric shock, do NOT remove cover (or back). Refer servicing to qualified personnel.

Defibrillator-proof type CF equipment; type CF equipment is specifically designed for applications where a conductive connection directly to the heart is established. The paddles indicate the equipment is defibrillator proof.

Defibrillator-proof type BF equipment; type BF equipment is suitable for intentional external and internal application to the patient, excluding direct cardiac application. Type BF equipment is type B equipment with an F-type isolated (floating) part. The paddles indicate the equipment is defibrillator proof.

Type B equipment; type B equipment is suitable for intentional external and internal application to the patient, excluding direct cardiac application.

Equipotentiality

Alternating current (AC)

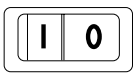

Power; **I** = ON; **O**= OFF

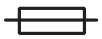

Fuse

PRESS

Press to open.

CLASSIFIED
C UL US
4P41

Medical Equipment
With respect to electric shock, fire and mechanical hazards only in accordance with UL 2601-1, and CAN/CSA C22.2 NO. 601.1.

Service Information

Service Requirements

Follow the service requirements listed below.

- Refer equipment servicing to GE Medical Systems *Information Technologies* authorized service personnel only.
- Any unauthorized attempt to repair equipment under warranty voids that warranty.
- It is the user's responsibility to report the need for service to GE Medical Systems *Information Technologies* or to one of their authorized agents.
- Failure on the part of the responsible individual, hospital, or institution using this equipment to implement a satisfactory maintenance schedule may cause undue equipment failure and possible health hazards.
- Regular maintenance, irrespective of usage, is essential to ensure that the equipment will always be functional when required.

Equipment Identification

Every GE Medical Systems *Information Technologies* device has a unique serial number for identification. A sample of the information found on a serial number label is shown below.

D 0 XX 0005 G XX

Month Manufactured
A = January
B = February
C = March
D = April
E = May
F = June
G = July
H = August
J = September
K = October
L = November
M = December

Year Manufactured
0 = 2000
1 = 2001
2 = 2002
(and so on)

Product Code
Two-character product descriptor

Product Sequence Number
Manufacturing number (of total units manufactured.)

Division
F = Cardiology
G = Monitoring

Device Characteristics
One or 2 letters that further describe the unit, for example:
P = prototype not conforming to marketing specification
R = refurbished equipment
S = special product documented under Specials part numbers
U = upgraded unit

2 Overview

The Solar 9500 Information Monitor

The basic Solar 9500 Information Monitor consists of a Solar 9500 processing unit, a compatible touchscreen display, and one or more acquisition devices.

The processing unit is the heart of the system. Primary user controls are provided by the touchscreen display but a keyboard and mouse may also be used.

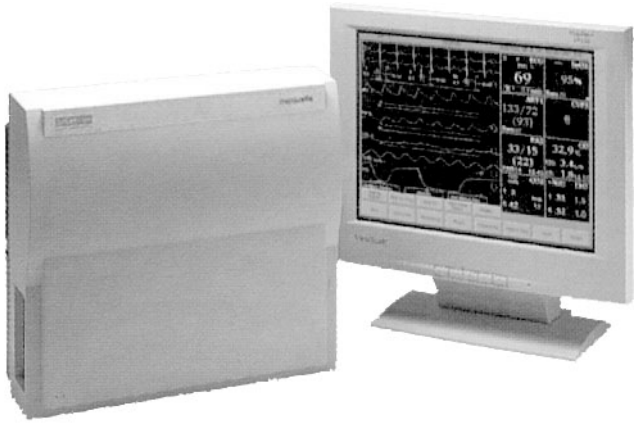

001A

Up to two additional displays may be attached directly to the Solar 9500 Information Monitor to display layout configurations separate from the Primary Display. The additional displays are connected via optional video boards installed in the Solar 9500 processing unit.

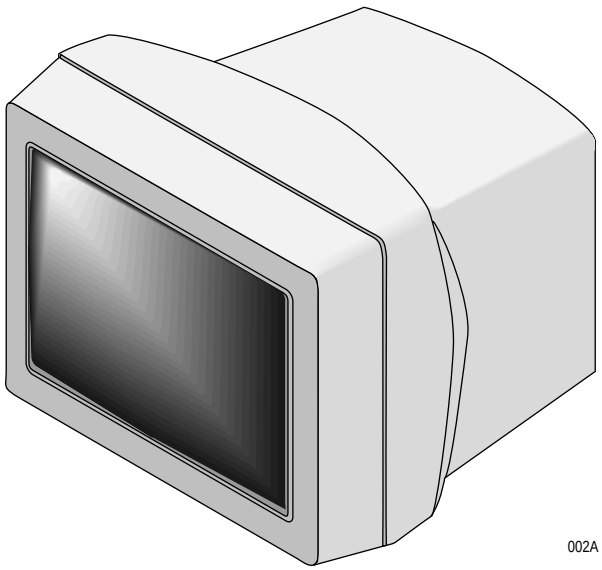

002A

Front View

On the front panel two indicator lights labeled AC and CPU show the operating condition of the unit. A connector panel on the right side of the unit provides all the connections to interface equipment to the system.

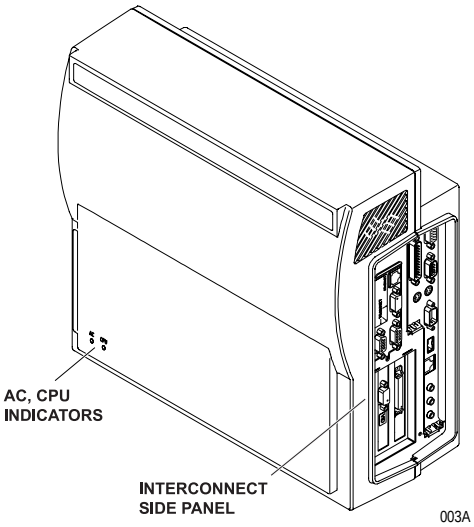

Rear View

Located at the rear of the unit are the equipotential lug, power supply inlet and switch, and a mounting bracket.

CAUTION
The Solar 9500 processor must be mounted in the vertical position. Never operate the unit in the horizontal position.

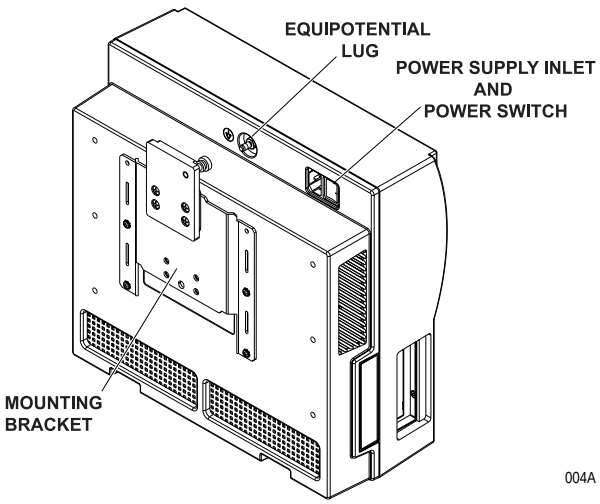

Interconnection

Shown below is the right side interconnect panel and a description of each connectors use.

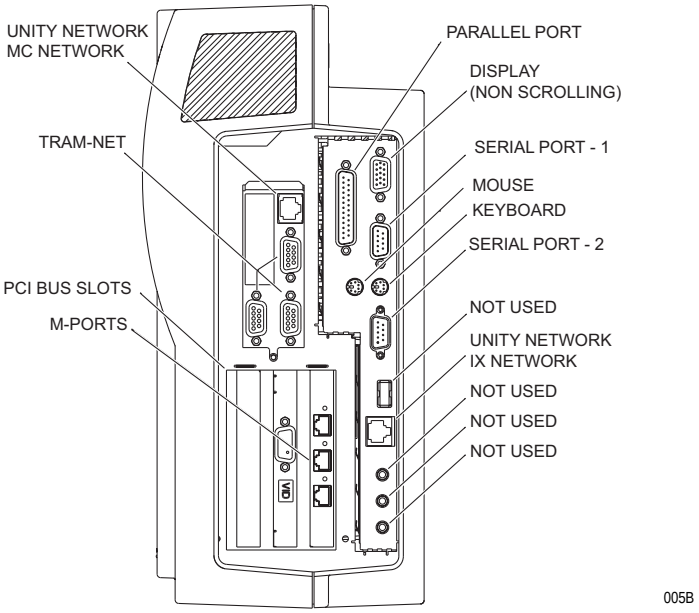

- UNITY NETWORK MC NETWORK is the Unity Network connection that provides real time data (Parameter waveforms and numerics) between GE devices.
- UNITY NETWORK IX NETWORK is the Unity Network connection that provides non-real time data between the Solar 9500 system and other hospital intranet devices.
- TRAM-NET is the GE acquisition network connection that provides real time data between a Tram-rac's patient connected acquisition devices (Trams and single parameter modules) and the Solar 9500 Information Monitor.
- PCI BUS SLOT is for optional add in boards (e.g. the second display).
- M-PORTS are for Unity Network ID, PRN 50, or PRN 50-M connection.
- PARALLEL PORT is for connecting to a PostScript compatible printer.
- SERIAL PORTS 1 & 2 are for touch screen, PRN 50, PRN 50-M, RAMS interface connections, or for polled parameter service.
- KEYBOARD is a PS / 2 keyboard connection.
- MOUSE is a PS / 2 mouse connection.

WARNING
Connect devices solely manufactured or approved by GE directly to the Unity Networks. Contact GE Technical Support before connecting equipment from other manufacturers.

Technical Specifications

Display Specifications	
Item	**Description**
Type	High definition raster or TFT Active Matrix Color LCD
Color depth	16 bit color
Resolution	1024 horizontal x 768 vertical
Vertical Frequency	70 Hz non-scrolling (erase bar), 60 Hz scrolling
Horizontal Frequency	57 kHz (minimum)
Video bandwidth	110 MHz (minimum)
Linearity	1.5% of vertical height Max

Solar 9500 Features and Options	
Item	**Description**
User interface	SAW Touchscreen (ELO touch systems SMART SET compatible)
Waveform presentation	Non-scrolling (erase bar) or scrolling
Number of waveforms	30 waveforms
Number of parameters	30 parameter windows
Sweep speeds	1, 5, 10, 15, 25, 35, 50 mm/sec
Seconds per waveform	Max of 12 seconds at 25 mm/sec (based on display configuration)
Pressure waveform scales	Full, individual or free
Software options	12SL ECG analysis, user display customization, browser, polled serial parameter data, arrhythmia waveform review

Processing Specifications	
Item	**Description**
Main Processor	Intel 233 MHz Pentium with MMX technology, main memory 128 MB RAM
Graphics Controller	Cirrus Logic GD-5465, 2MB RAMBUS DRAM
Optional Graphics Processor with Hardware Windowing	Fujitsu Sparclite MB86831 32bit, 50 MHz 6MB VRAM.
Unity IX Network Communication Processor	Intel 82558, 10/100 Base-TX
Unity Network MC Network Communication Processor	Intel 82596, 10 Base-T

Processing Specifications	
Tram-net Communication Processor	Intel 82596
M-Port Network Communication Processor	Intel 82559
M-Port Ethernet Hub/Repeater	Intel LXT914

Data I/O Connectors	
Item	**Description**
Unity Network IX Network	RJ45 - standard
Unity Network MC Network	RJ45 - standard
Tram-net	3-DB9F - standard
M-Port	3-RJ45 - standard
Main graphics	DB15HD - standard
Scrolling Graphics	DB15HD - 2 optional
Parallel port	DB25F - standard
Serial ports	2-DB9M - standard
Keyboard/mouse	2-6 pin DIN, P/S2 style
USB	4 pin USB - standard (not used)
Audio line out	Mini-jack standard (not used)
Audio line in	Mini-jack standard (not used)
Audio Mic out	Mini-jack standard (not used)

Environmental Specifications	
Item	**Description**
Power Requirements	110 - 120 (± 10%), 50/60-Hz 220-240 (± 10%), 50/60-Hz
Power Consumption	200 Watts (includes Solar 9500, Tram-rac and Tram)
Thermal dissipation	683 Btu/hr
Internal 10 watt-hour UPS battery	Provides 12 second backup power for clean disk shutdown
Cooling	Forced air

Environmental Specifications	
Operating Conditions Temperature Humidity	 10° C to 35° C (50° F to 95° F) 15% to 85% (noncondensing)
Storage Conditions Temperature Humidity	 –40° C to 70° C (-40° F to 158° F) 15% to 95% (non-condensing)

Physical Specifications (Solar 9500 CPU)	
Item	**Description**
Height	332 mm (13.0 in)
Width	348 mm (13.7 in)
Depth	156 mm (6.1 in)
Weight	9 kg (19.8 lbs max. depending on options)

Certification	
Item	**Description**
Safety Standards	Solar 9500 Processing Unit: UL 2601-1 Classified UL Classified for CAN/CSA C22.2 No. 601.1 IEC 60601-1 Certified CE Marking for the 93/42/EEC Medical Device Directive (Refer to operator's manual for CE Marking specifics.)

Classification	
Item	**Description**
Type of protection against electrical shock	Class I Equipment
Degree of protection against electrical shock	Type B Applies Part
Degree of protection against harmful ingress of water	Ordinary Equipment (enclosed equipment without protection against ingress of water)
Degree of safety of application in the presence of a flammable anesthetic mixture with air or with oxygen or nitrous oxide	Equipment not suitable for use in the presence of a flammable anesthetic mixture with air or with oxygen or nitrous oxide.
Method(s) of sterilization or disinfection recommended by the manufacturer	Not Applicable
Mode of operation	Continuous operation

Supported Devices

The following is a list of supported peripheral devices compatible with the Solar 9500 via the Unity Network ID connectivity device. Refer to the Unity Network ID connectivity device service manual for interface adapter part numbers.

NOTE

Due to continuous product innovation, this list may no longer be comprehensive. If necessary, call your sales representative for a current list of supported peripheral devices.

Refer to the operator documentation for further information about supported devices.

Supported Anesthesia Machines	
Manufacturer	**Model**
Dräger Medical	Cato Cicero EM (9 pin) Cicero EM (25 pin) Cicero PM 8060 (9 pin) Cicero PM 8060 (25 pin) PM 8050 Julian
North American Dräger Medical	Narkomed 2B, 2C, 3, 4

Continuous Cardiac Output	
Manufacturer	**Model**
Abbott Laboratories	Q-Vue Q2
Baxter Edwards	Vigilance Vigilance European

Gas Analyzers	
Manufacturer	**Model**
Datex	Capnomac Ultima
Datex-Ohmeda	5250 RGM: Resp Gas Rascal II Anes Gas

Anesthesia Ventilators	
Manufacturer	**Model**
Datex-Ohmeda	7800/7810 7900 Aestiva 3000

Ventilators	
Manufacturer	**Model**
Bear Medical	Bear 1000
Bird	8400ST/6400ST/VIP
Dräger Medical	Babylog 8000 Evita Evita 2 Evita 2 Dura Evita 4
Hamilton Medical	Amadeus Veolar Galileo
Nellcor Puritan Bennett	7200E/SPE/AE Adult Star/1500/2000 Infant Star/500/950 840
Siemens Medical	SV 300 SV 300A SV 900C/D/E

3 Installation

System Components

The Solar 9500 Information Monitoring System consists of four basic components:

- Solar 9500 processing unit,
- A color touch screen Primary Display,
- Tram module, and
- Tram-rac housing (holds Tram and single parameter modules).

Additional, optional components include:

- Additional single or dual parameter modules,
- RAMS,
- One or two additional displays,
- Unity Network ID
- PostScript Printer and/or PRN 50 or PRN 50-M, and a
- Browser server

Shown below is an example of a Solar 9500 Information Monitoring System.

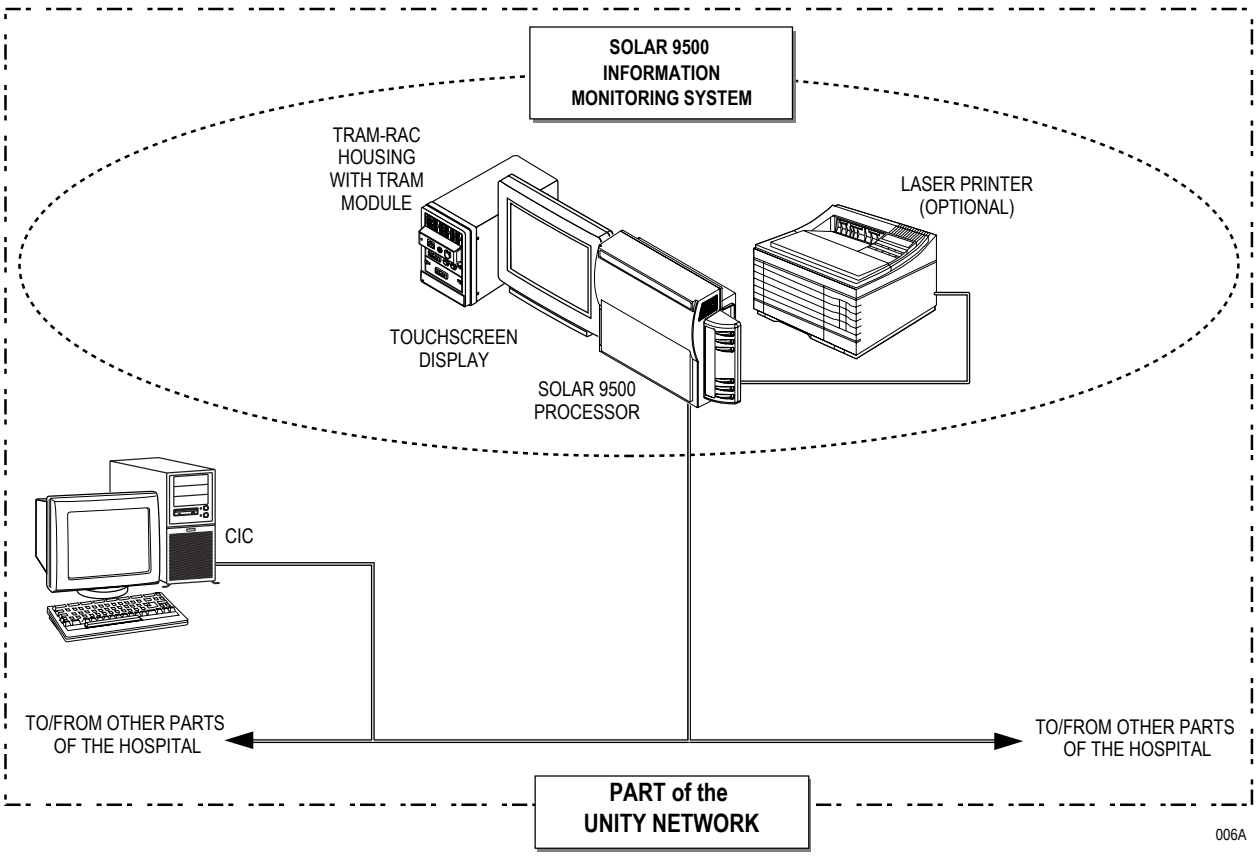

Processing Unit Setup

Check the unit for proper voltage setting before installation. Although the AC mains voltage on Solar 9500 processing unit is factory set for your requirements, the power supply could be damaged if S1 is in the wrong position.

CAUTION
Make sure the voltage selection switch is in the correct position before connecting AC mains. The power supply will be damaged if the switch is in the 115 volt position and a high range voltage (195-270VAC) is applied. The supply will not function if in the 230 volt position when the low range voltage (90-135VAC) is applied.

1. Lay the Solar 9500 processing unit on its back.
2. Simultaneously press in on the two release tabs and lift up the front cover.

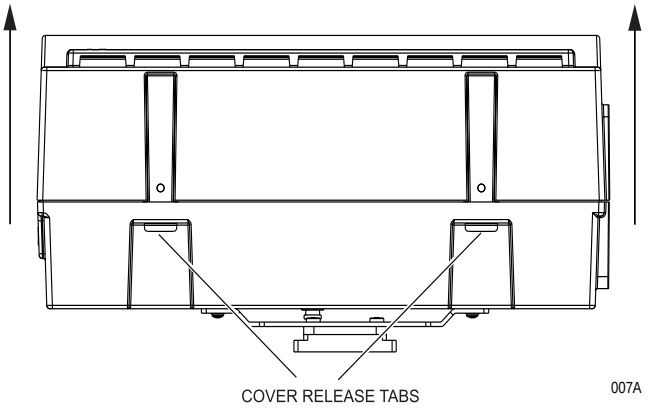

3. View the power supply voltage setting through the window at the top of the unit.

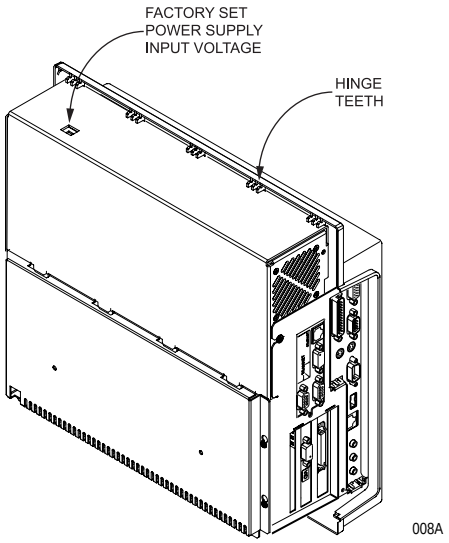

4. Replace cover by carefully aligning the top edge of the cover into the hinge teeth on the back cover, then swing the front cover down until the release tabs are fully engaged.

Mounting

The processing unit MUST be installed in a vertical position with the supplied bracket before use.

CAUTION
Operating the device in a horizontal position or without the supplied bracket may cause damage to the equipment.

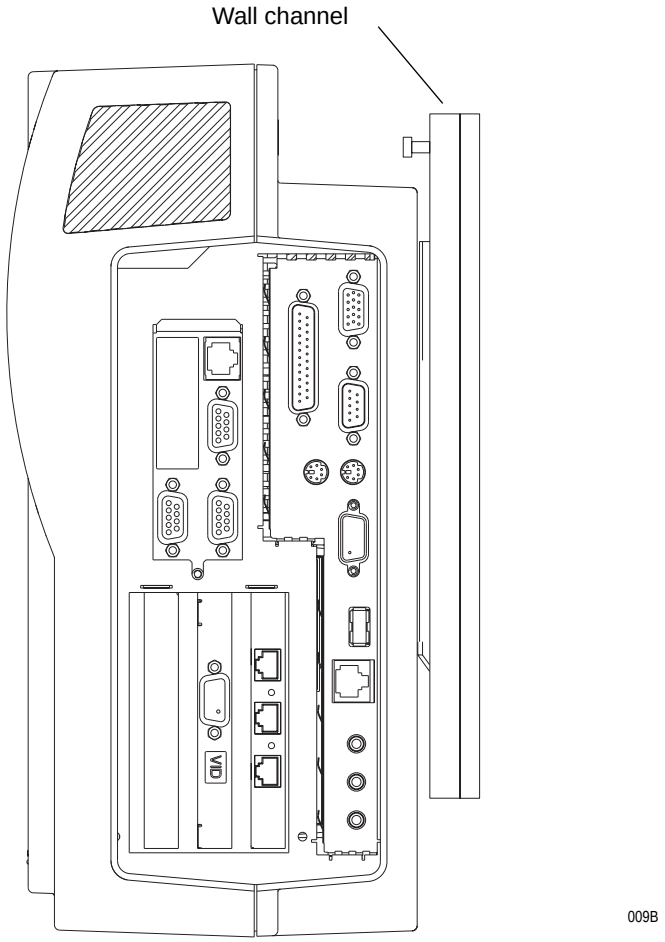

Installing Cable Shroud

After installing all of the interface cables, use the following instructions to install the cable shroud.

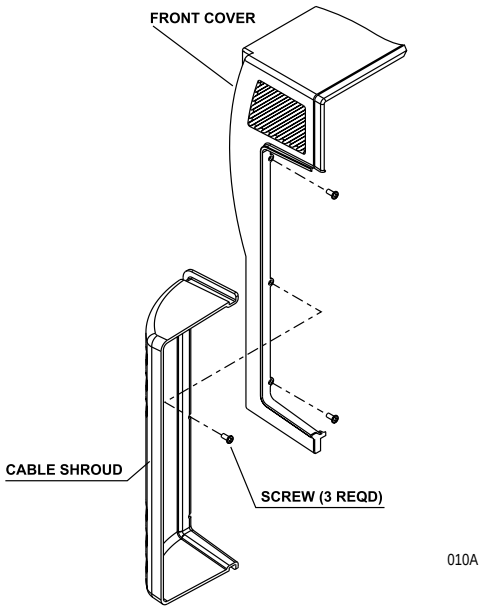

1. Remove the front cover as instructed in “Processing Unit Setup” on page 3.
2. Snap the cable shroud, pn 420235-001, onto the side of the Solar 9500 housing.
3. Secure with the three self-tapping screws provided, pn 45177-205.
4. Replace the front cover as instructed in “Processing Unit Setup” on page 3.

CAUTION
Do not force the cover. Ensure that the front cover is aligned properly on its hinges before closing. Forcing the front cover into place with improper alignment will cause damage to the cover.

Display Descriptions

A single Solar 9500 processing unit can be connected to up to three displays as shown in the block diagram below and described as follows:

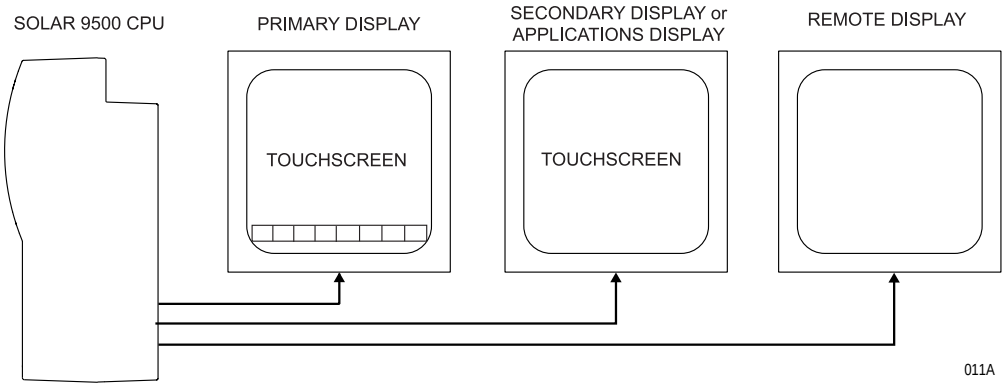

Primary Display

This is the first in a series of monitors or may be the sole monitor connected to the Solar 9500 processing unit. The primary display is distinguished from the other monitors by the eight control buttons displayed at the bottom of the screen. Real Time data (parameter waveforms and numerics) and/or Non-Real Time data (a display with trends, alarm history, etc.) are displayed on this screen.

Secondary Display

A secondary display has touchscreen capabilities and displays Real Time and/or Non-Real Time data on a two or three display system.

Remote Display 1, 2

A remote display is a view only monitor and is not intended to be used as a touchscreen display. No user interface or applications in display setup are available. Up to two remote displays can be connected to the Solar 9500 processing unit.

Touchscreen Interface

A touchscreen display is the recommended user interface, although a keyboard and/or mouse may be used. The touchscreen must be compatible with ELO Touchsystems' Smart Set protocol. You may connect up to two touchscreens to the Serial Ports 1 and 2 of the Solar 9500 processing units. See chapter 4, Software Configuration for information on Serial Port Configuration.

Scrolling vs. Non-scrolling Waveforms

Scrolling refers to the ability to continuously move the waveforms across the display from right to left. Non-scrolling waveforms are static with an "erase bar" moving across the display. As the erase bar sweeps the display, it erases the data in front of the bar and writes new data in back of the bar.

The base Solar 9500 system only supports non-scrolling waveforms. For scrolling and non-scrolling waveform capability, the PCI bus add-in video board must be ordered. The Solar 9500 can support up to two add-in video boards.

Browser Support

The web browser feature is only supported on the motherboard video connection (non-scrolling) and requires a screen description of *Primary*, *Secondary*, or *Applications Only*. See "Display/Layout Setup" *on page 4-4* for details.

Processing Unit/Display Interconnection

Each display in a Solar 9500 system must be connected according to its configuration. Illustrated below are simplified interconnect diagrams for the various display configurations.

Two Displays - Primary Non-Scrolling

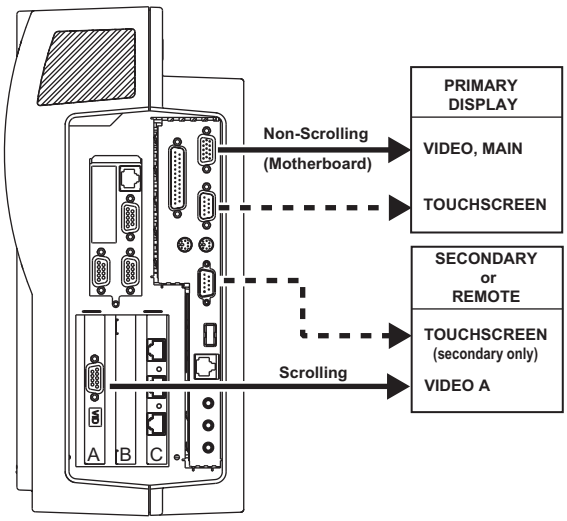

Three Displays - Primary Non-Scrolling

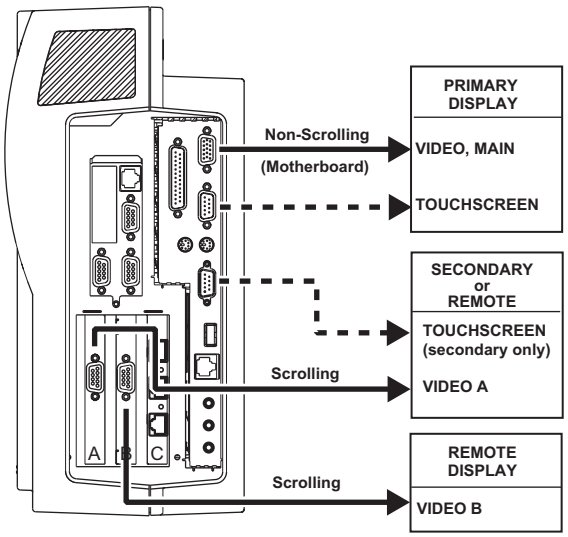

Two Displays - Primary Scrolling

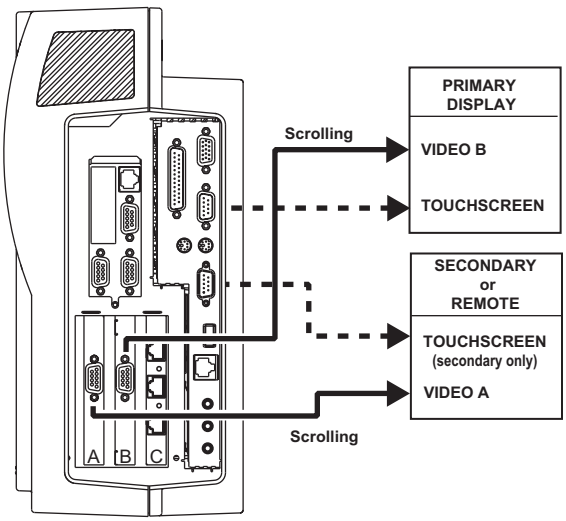

Three Displays - Primary Scrolling

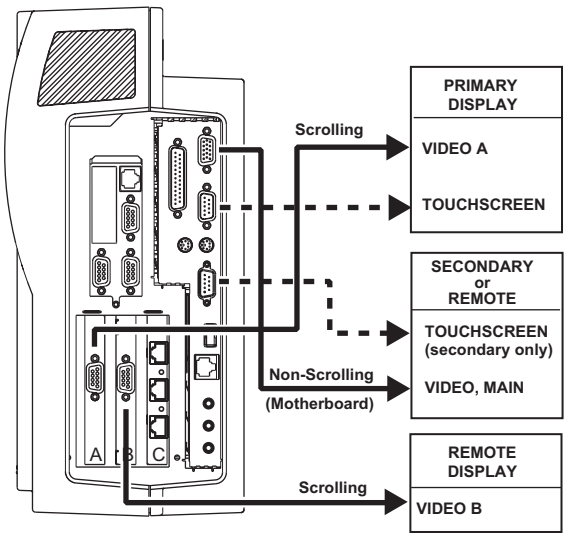

012B

Flat Panel Display Interconnection

To connect a Flat Panel Display, a medical grade power supply is required. Shown below is an illustration.

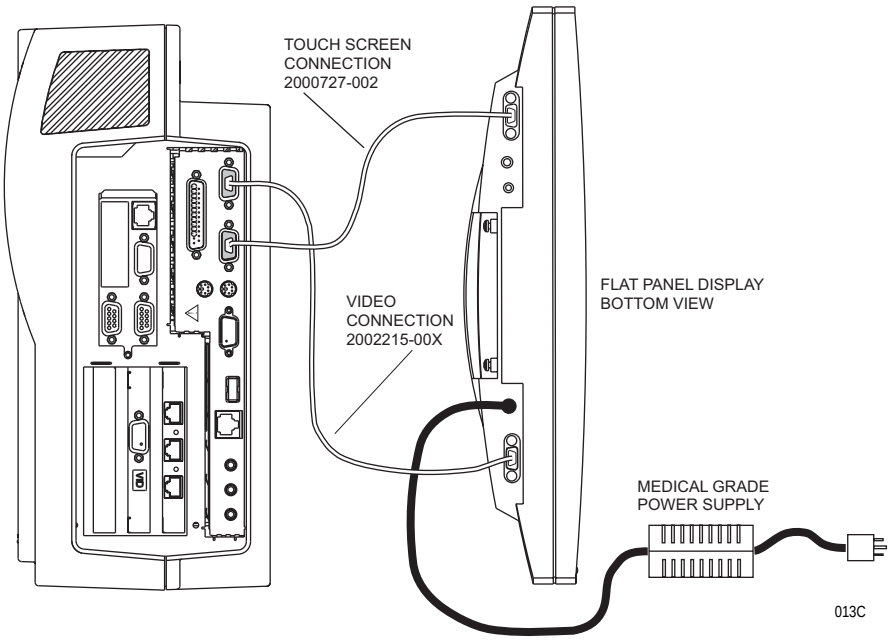

Display Mounting

Use GE or approved display mounting solutions when installing one or more displays.

CAUTION
When using a non-UL2601/IEC60601 display ALWAYS

- use an approved isolation transformer, and
- protect the display from possible ingress of liquids.

Acquisition Interfaces

Local bed acquisition comes from three possible sources:

- a Unity Network ID connectivity device
- a Tram and single parameter modules in one or two Tram-rac housings via the Tram-net interface, and
- the RAMS (Random Access Mass Spectrometer) via an RS-232 interface.

The Tram-net interface is a GE proprietary network used for communications between a bedside monitor and the Tram-rac(s).

Tram-rac Housing

The Tram-rac housing (remote acquisition case) acquires patient data for the Solar 9500 Information Monitor System. The Tram-rac Housing Service Manual has more information. There are two Tram-rac housings available for the monitor:

- Tram-rac 2 housing, which holds a single Tram module, and
- Tram-rac 4A housing, which can hold a Tram module, a SAM module, and/or additional single parameter modules.

NOTE

The Solar 9500 is NOT compatible with the RAC 2A housing.

Shown below is a Tram-rac 4A housing with a Tram module and two single parameter modules inserted.

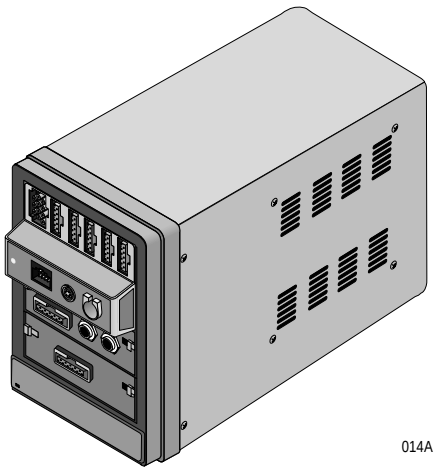

Tram-rac Power Supply Connection

If a Tram-rac power supply is used, connect the power cord as shown below.

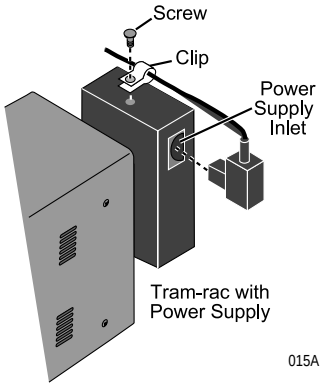

Processing Unit/Tram-rac Interconnection

The Solar 9500 processing unit will support up to two Tram-rac housings. These housings can be connected in parallel or series. When connected in series the center Tram-net connector of the Tram-rac connects to the second Tram-rac housing. The Tram-rac housing furthest from the monitor must have a power supply.

Tram-rac 2 Housing

Shown below is the connection from the Tram-rac 2 housing to a Solar 9500 processing unit.

NOTE

To connect the Solar 9500 processing unit to the Tram-rac housing, use cable pn 700520-00*x* or equivalent. A Tram-net hub assembly is NOT used with the Solar 9500 processing unit

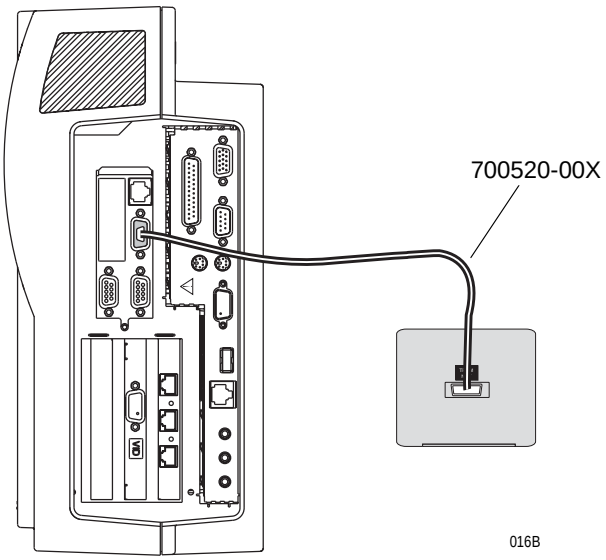

Tram-rac 4A Housing

Shown below is the connection from the Tram-rac 4A housing to a Solar 9500 processing unit.

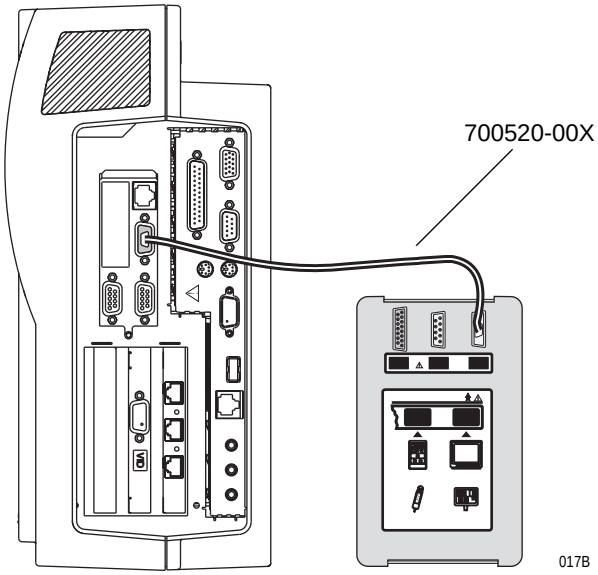

Unity Network ID Connectivity Device

Shown below is a connection from the Unity Network ID to a Solar 9500 processing unit. The Unity Network ID may be connected to any M-Port.

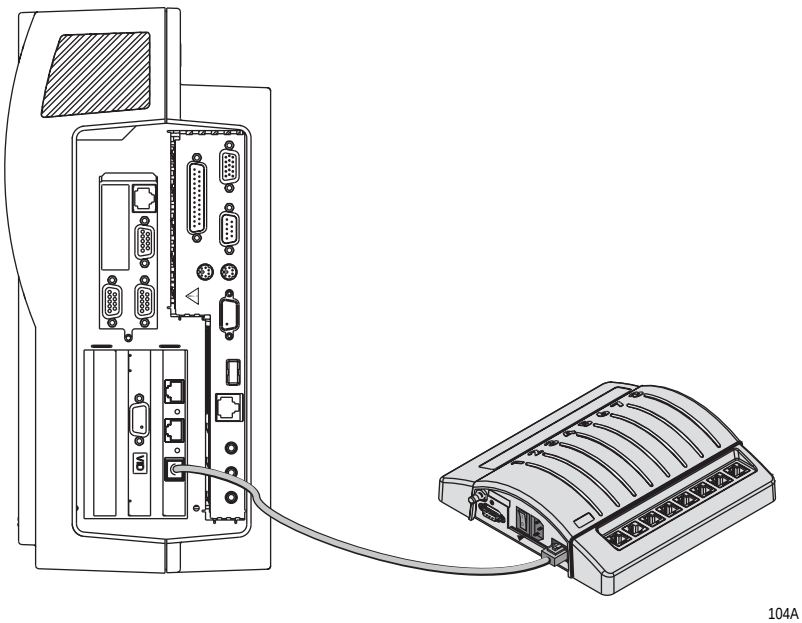

Dual Tram-rac Housings

Shown below are examples of how to connect two Tram-rac housings to a Solar 9500 information processor.

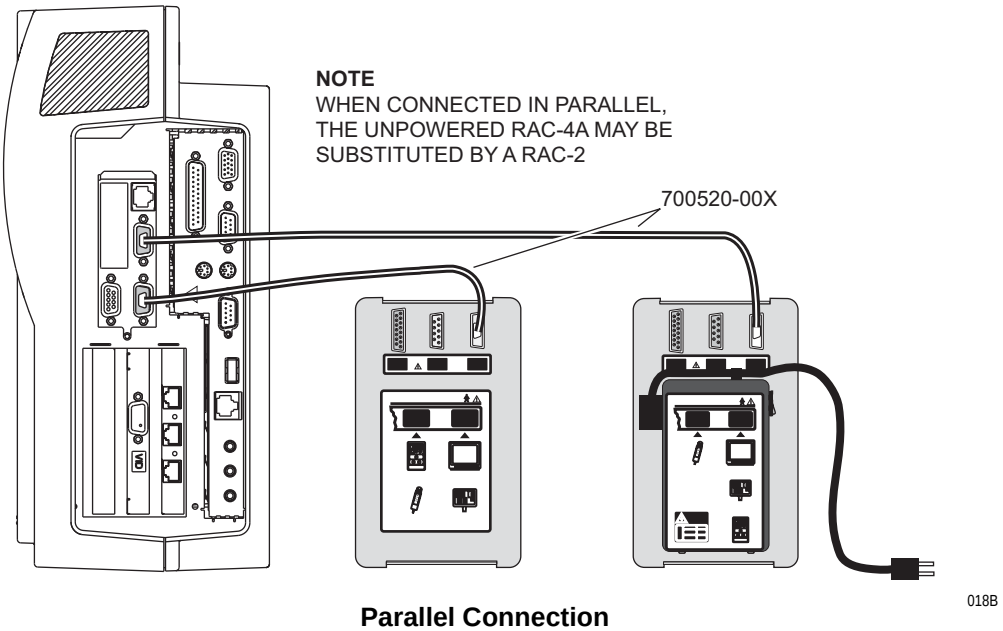

Parallel Connection

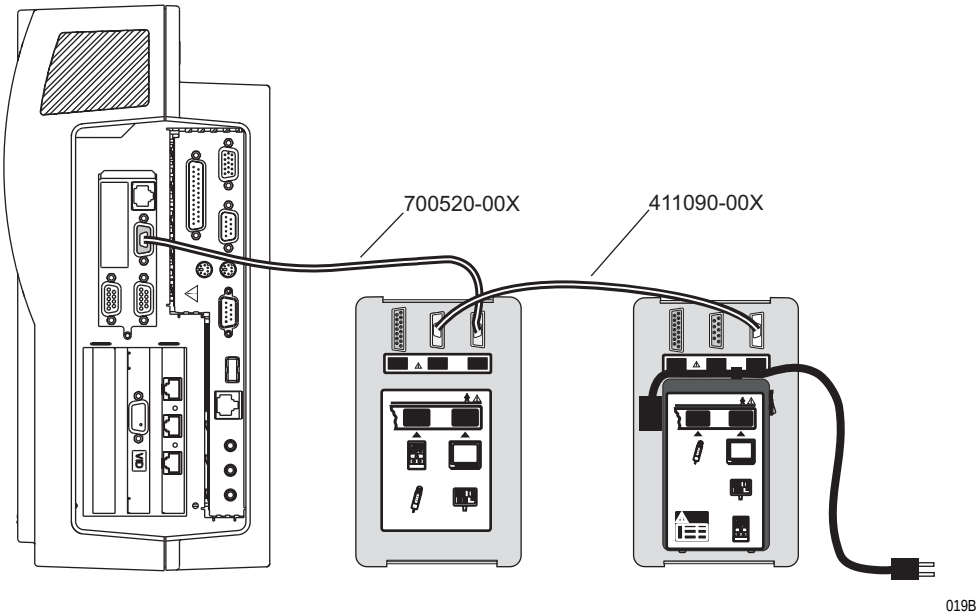

Serial Connection

About Tram-net

The three 9-pin connectors on the processing unit make a Tram-net network available for the acquisition devices.

Tram-net is a small network that offers ample flexibility, a high rate of communication, and relatively inexpensive cabling. Data is transmitted at the rate of 921.6K bits per second. It uses a star topology, sometimes referred to as a rooted tree topology. This means that the wiring of the network can be pictured as a star or a series of stars. The center of each star is called a hub, and at the points of the star are called nodes. There are cables between the nodes and the hubs, but no cables exist between nodes.

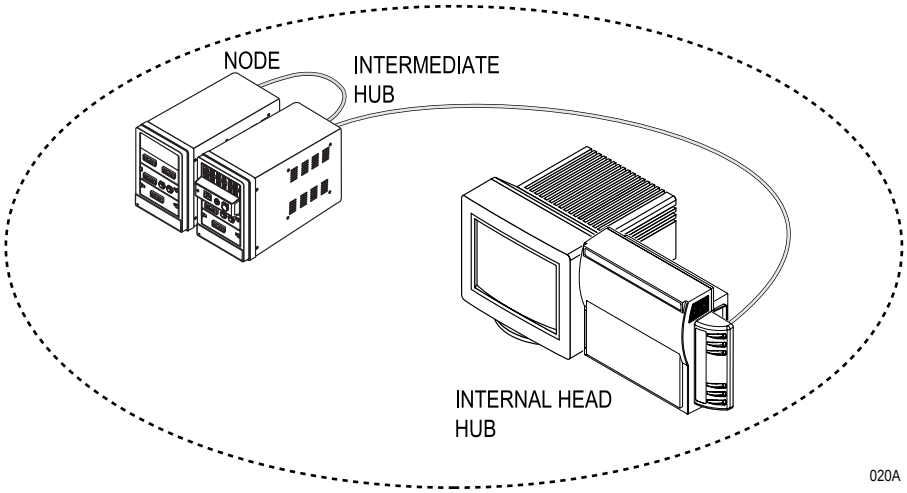

NOTE

Do not confuse the internal hub or node with the Tram-net hub assembly used with other GE modular monitors. The hub described in these paragraphs refers to the electronic distribution point of data.

Data is acquired at a node, and is transmitted through a hub to all the other nodes. Each node has an address so data will be received by the node with the correct destination address. It is impossible for a node to communicate with another node without the data going through a hub somewhere along its journey. The hub controls all of the data 'traffic' in the system.

In a Tram-net system, the head hub is contained in the patient monitor, but there will be intermediate hubs in the Tram-rac housing and Tram module as well.

Processing Unit/RAMS Interconnection

Before connecting the RAMS to the Solar 9500 processing unit you must first configure the serial channel of the processing unit via the Serial Interface Controls in the Service Menu. See chapter 4, Serial Interface Controls for details. The RAMS interfaces with a Solar 9500 via the RAMS RS-232 connection to the Solar processing unit with an interface cable (pn 414803-003) as shown below.

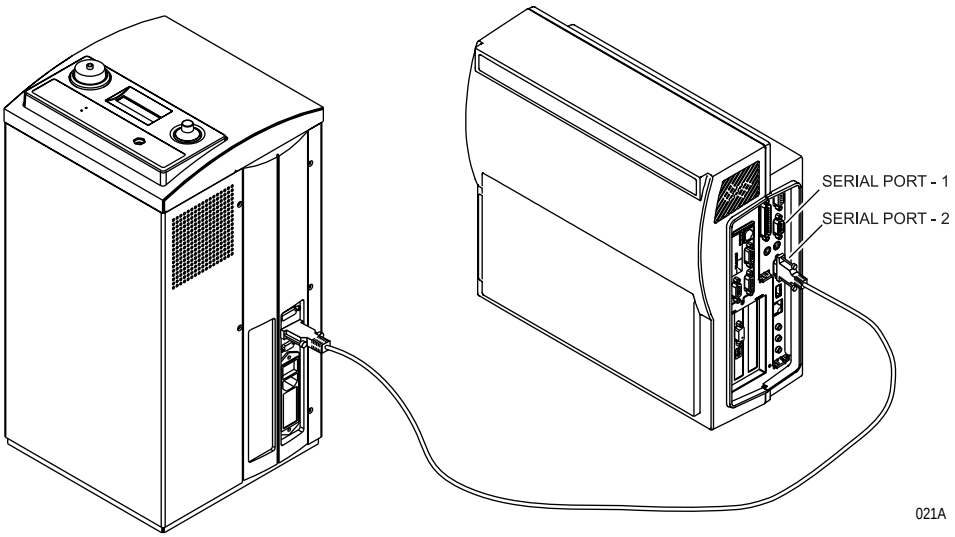

Processing Unit/Polled Parameter Interconnection

The optional polled parameter service allows access to patient parameter data from the Solar 9500 to other data gathering devices. Only the polled parameter service is available. Admit/discharge, time, software version, and waveform services are NOT available via the serial interface.

Before connecting the data gathering device to the Solar 9500 processing unit, you must first configure the serial channel of the processing unit via the Serial Interface Controls in the Service Menu. Refer to chapter 4, Serial Interface Controls for details.

The serial port of the Solar 9500 has a standard PC pinout and functions as a DTE (see EIA-232-E and EIA/TIA-574 standards for further information). The following table shows the pinout of the serial port on the Solar 9500 processing unit.

Pin Number	Pin Name	Direction To/From the Solar 9500
1	DCD	IN
2	RXD	IN
3	TXD	OUT
4	DTR	OUT
5	GND	GND
6	DSR	IN
7	RTS	OUT
8	CTS	IN
9	RI	IN

To connect the Solar 9500 processing unit to a standard PC for data gathering, a null modem cable with 9-pin female (socket) ends should be used. The serial ports are not isolated on the Solar 9500 processing unit, and, if required, an external isolation mechanism must be used.

Local Area Network (LAN) Interfaces

The Solar 9500 supports two separate LAN ethernet connections. One connection is dedicated to the Unity Network MC network and one is dedicated to the Unity Network IX network, hereafter referred to as MC network or IX network. Both use a twisted-pair network connection.

The MC (Mission Critical) network is used to connect the Solar 9500 processing unit to other bedsides. This network contains all the waveforms, parameters, alarms and other time-sensitive data. This network is also used to send status information about the printers and for “pushing” layout, unit defaults, and Solar 9500 software between Solar 9500 systems. The MC network is a 10BaseT network.

The IX (Information Exchange) network is used for connection to a Weblink Multiple Access Server (MAS) and possibly a network laser printer. The U IX network is a 10BaseT/100BaseTX Network with auto-sensing between protocols.

Below are the locations of the MC and IX network connector ports on the Solar 9500 processing unit.

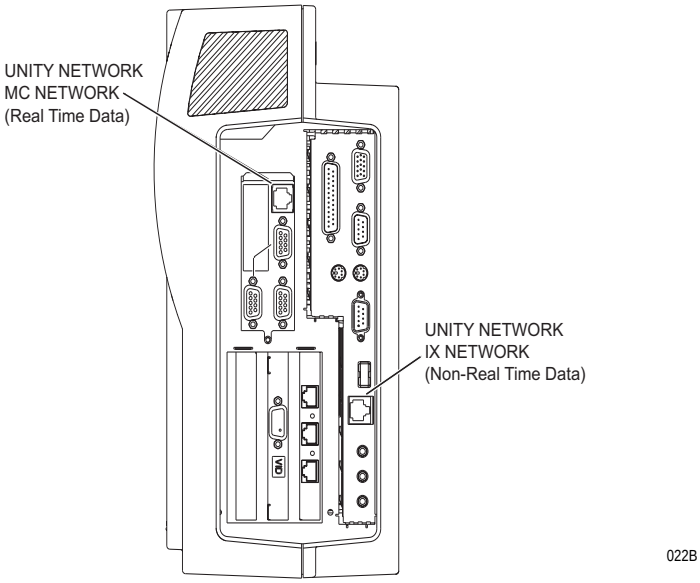

See chapter 4, Software Configuration for information on how to setup and configure the networks.

About Ethernet

Ethernet is a local area network used as the main link of the Unity Network, a comprehensive information communication system. The Unity Networks offer the high rate of communication of 10 megabits per second. This local area network links all patient monitors, central stations, and other GE equipment throughout the hospital. Depending on the construction of the hospital, thick-net, thin-net, or CAT-5 twisted pair cabling is used. The Solar 9500 is designed to be used with twisted-pair cabling. Consult GE when trying to interface with either thick-net or thin-net cabling.

Twisted Pair

Twisted pair is the most popular cabling because it is easy to install and flexible to work with. It uses the star topology with a concentrator as the hub of the segment. Each of the network devices is connected directly to the concentrator so longer lengths of cable are required. A maximum of 100 meters or 328 feet is the longest length of twisted pair cable allowed. The number of devices is limited to the amount of connectors at the concentrator.

For example, one segment may connect all the patient monitors and central stations in the ICU (Intensive Care Unit) and another may connect the monitoring system in the CCU (Critical Care Unit). Each segment could be a fully-functioning stand-alone system if they were not connected to each other. However, with a bridge or repeater to connect the ICU (one segment) with the CCU (the other segment), information can pass between any of the nodes (patient monitors and central stations) on either branch similar to a patient transfer from one unit to another.

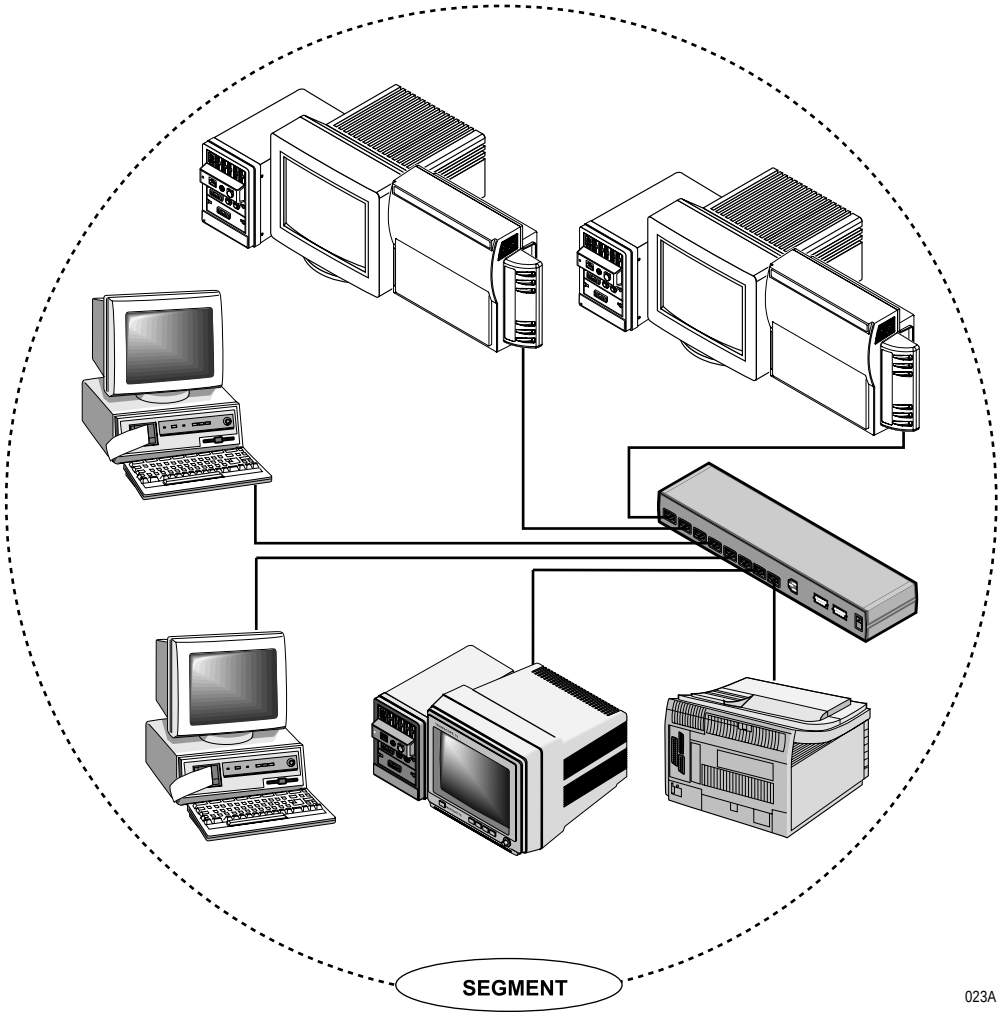

Network Terms

Illustrated below is a simplified view of a network and a definition of its terms.

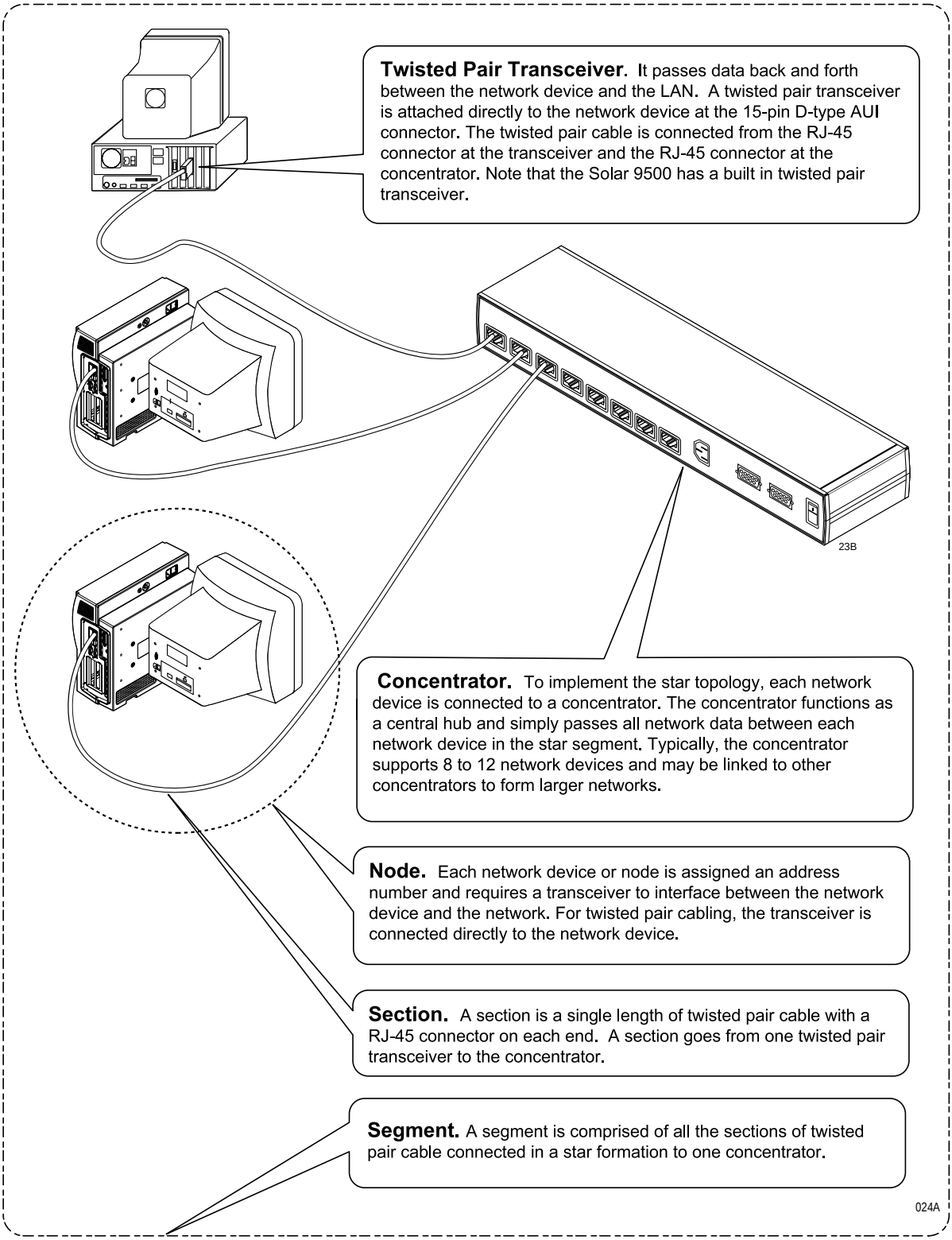

Printer Interconnect

The following types of printer connections are supported by the Solar 9500:

- A network printer connected to either ethernet interface via a hub or switch
- A printer connected to a parallel port
- A PRN 50 or PRN 50-M connected to an M-Port
- A PRN 50 or PRN 50-M connected to a serial port

NOTE

- Only one parallel port printer can be used.
- Only one PRN 50 or PRN 50-M writer can be used.
- A PRN 50 or PRN 50-M writer assigned to an M-Port will not be used by the Solar 9500 if a serial port is configured to be used for a PRN 50 or PRN 50-M writer.
- If more than one PRN 50 or PRN 50-M writer is connected to M-Ports, only the one that was connected first will be used. If it is disconnected, then one of the other available writers will be used.

Parallel port printers and writers are broadcast to the network and can be shared by other Solar 9500s. The parallel port printer or writer name is identified and broadcasted as the bed name of the Solar 9500 it is connected to; for example, *Bed 1 WRITER*.

Laser Printer

WARNINGS

SHOCK HAZARD. Laser printers are UL 60950/IEC 60950 certified equipment, which may not meet the leakage current requirements of patient care equipment. This equipment must not be located in the patient vicinity unless the medical system standard IEC 60601-1-1 is followed.

Do not connect a laser printer to a multiple portable socket outlet (MPSO) supplying patient care equipment. The use of a MPSO for a system will result in an enclosure leakage current equal to the sum of all the individual earth leakage currents of the system if there is an interruption of the MPSO protective earth conductor.

An optional laser printer can be directly connected to the Solar 9500 processing unit at the parallel port or to either network used by the Solar 9500. However, this printer **must** be PostScript level 2 compatible. See "Printing" on page 4-12 for detailed information about printer configuration.

All printers are shared across the network whether they are directly connected to the network or indirectly through a Solar 9500 with a parallel port printer. This is accomplished by assigning a Solar 9500 to act as the print server for each printer on the network. A single Solar 9500 can act as a print server for multiple printers.

CAUTIONS

Multiple Solar 9500s can not act as print servers for a single printer. Using them in this manner will result in unpredictable behavior.

Solar 9500 printers may not be shared with other devices (e.g. CIC).

Shown are two methods of connecting to the parallel port. Connect the printer to the processing unit with cable pn 6119-104 as shown.

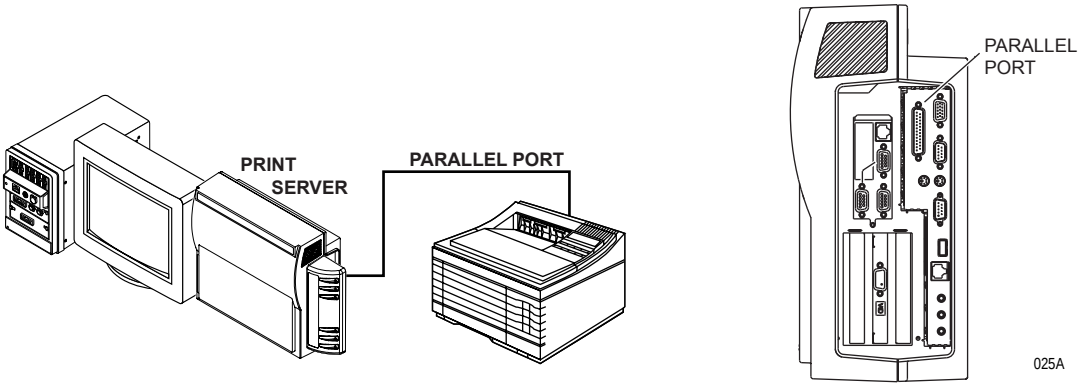

Printer to Parallel Port

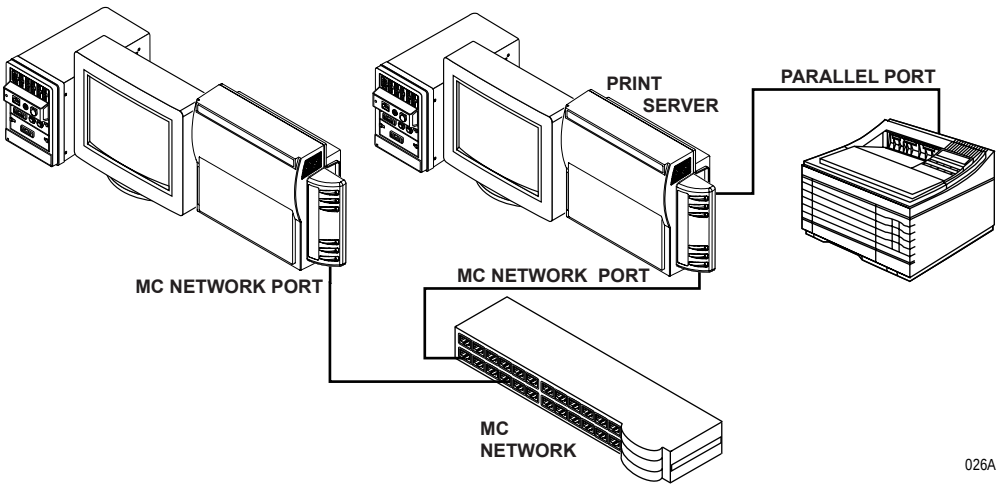

Printer to Parallel Port, System to the Unity Network MC Network

PRN 50 Digital Writer

A PRN 50 or PRN 50-M digital writer can be connected to one of the Solar 9500 M-Ports or serial ports. A writer connected to an M-Port will not be used by the Solar 9500 if a writer is configured to a serial port.

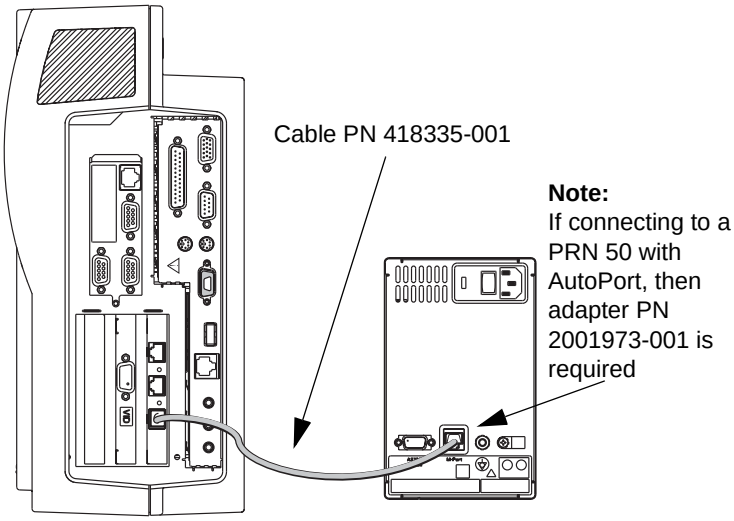

PRN 50 or PRN 50-M to M-Port

Refer to "Serial Interface Controls" on page 4-16 for instructions on configuring a port for a PRN 50 or PRN 50-M digital writer.

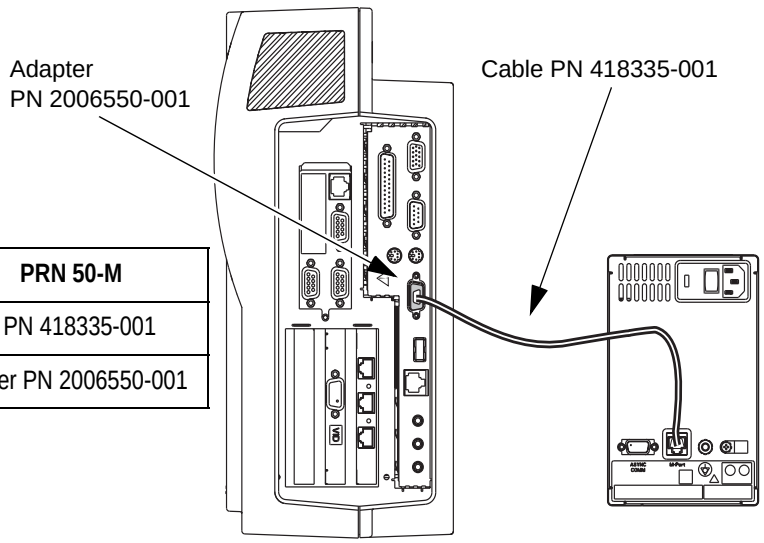

PRN 50	PRN 50-M
Cable PN 422843-001	Cable PN 418335-001
No adapter	Adapter PN 2006550-001

PRN 50-M to Serial Port

Connecting to the Unity Network MC Network

When connecting a network printer to the MC network, the IP address of the printer should start with 126.50.*x.x.* and the netmask should be 255.0.0.0. This assumes that the default MC network address of the Solar 9500 is unchanged from the factory default. Consult the operating manual of the printer for setting the IP address and netmask.

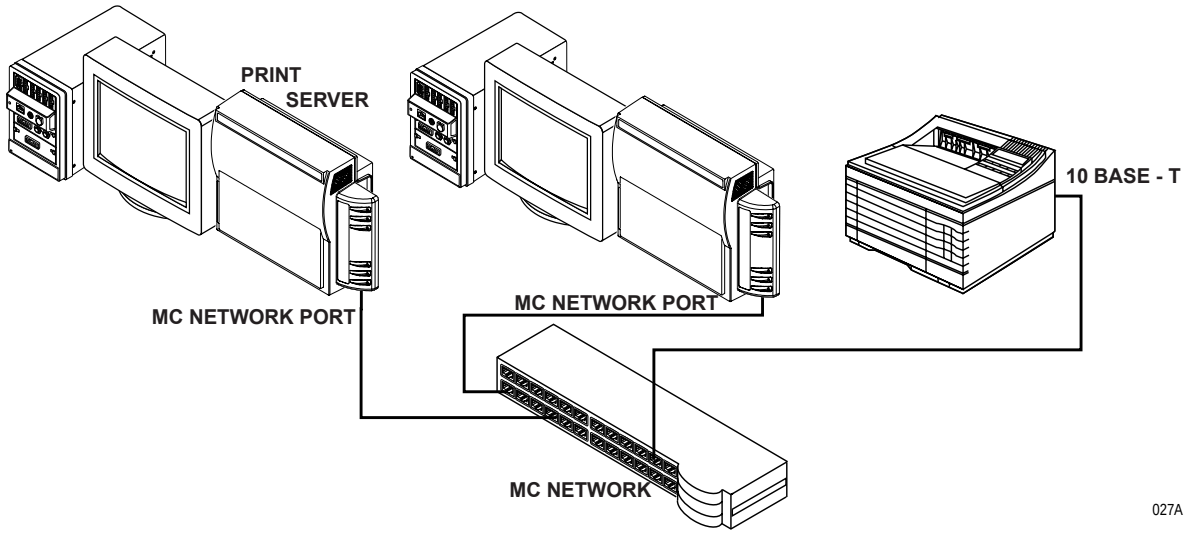

Connecting to the Unity Network IX Network

When connecting a network printer to the IX network, the IP address should be a unique, valid node within the subnet of the IX network. The netmask should correspond with the rules determined by the institution for the IX network.

NOTE

To share a printer between Solar 9500s on the IX network, the Solar 9500s must also be connected to the MC network, since all printer status information passes through the MC network.

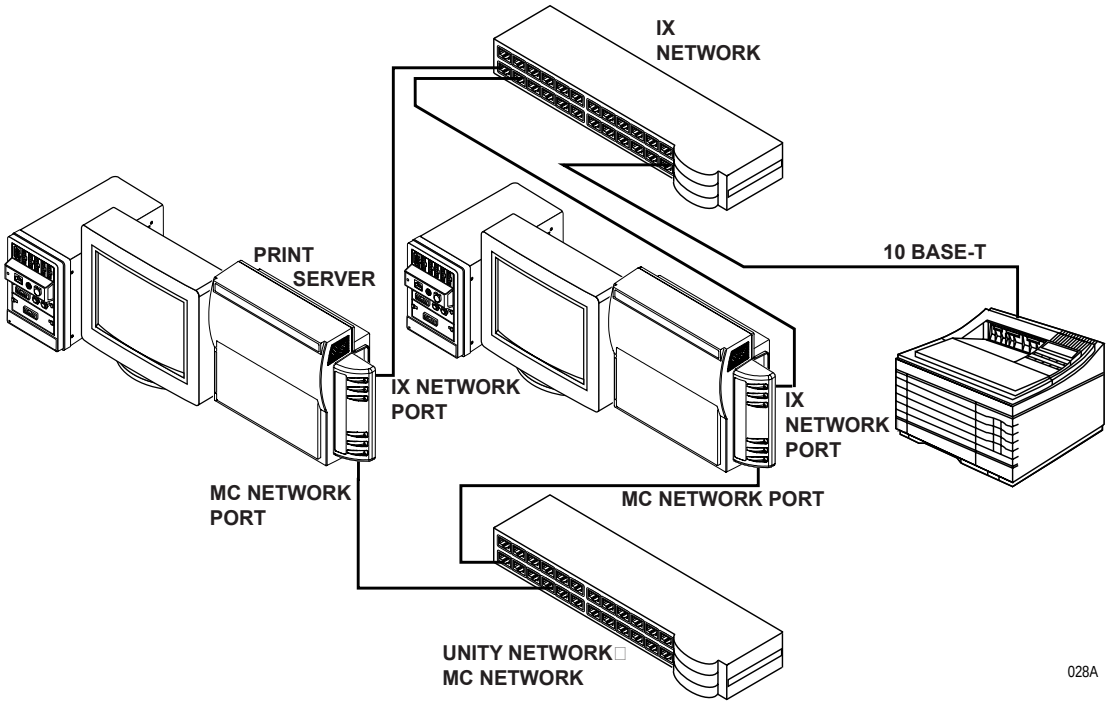

Keyboard and Mouse

The optional keyboard and mouse can be used in lieu of the touchscreen interface. They are also used when servicing or troubleshooting a Solar 9500. A port is provided for each device at the interconnect panel and they are NOT interchangeable. Follow the directions below when connecting these devices:

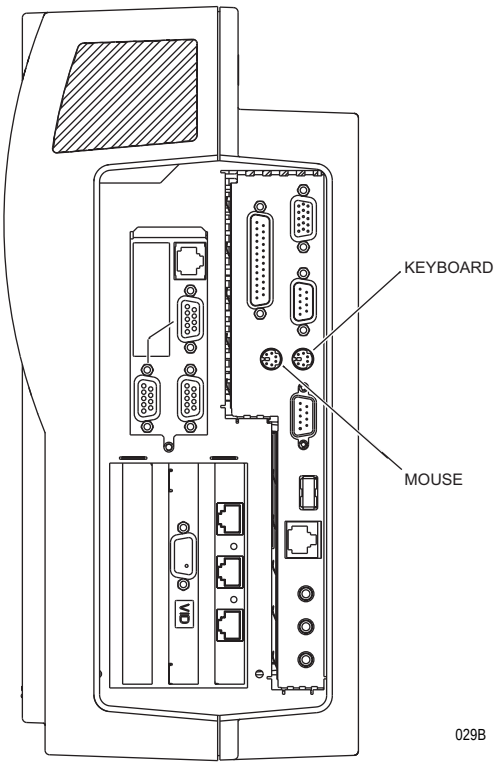

NOTE

The keyboard and mouse must be connected to the Solar 9500 processor BEFORE power up or it will not function.

The keyboard will not operate unless the mouse is connected.

Turning Power On

The Solar 9500 processing unit is preset at the factory for a specific AC voltage. Before applying power to the monitor, be sure its voltage setting matches your power requirements. Refer to the label on the back of the processor for the voltage and current requirements. Refer also to Power Requirements in chapter 2, Technical Specifications.

When all cables are properly connected and the attached display has been energized, the power switch on the back of the Solar 9500 processor should be pressed to the “1” or ON position.

The power-up process takes a few minutes to complete.

- Five seconds after turning power on, you should see the Solar 9500 logo displayed on each of the displays.
- Approximately one minute after turning power on, the graphical user interface, waveforms, and parameters will be displayed on the screen and normal processing will be started.
- Several seconds after the primary display is up, the second and third displays will be functional.
- About 2.5 minutes after the power-up sequence is complete, all applications will be available and printing will be active.

NOTE

Do not switch the power off and on between cases. Unit must be powered down before servicing. Refer to “Turning Power Off” on page 3-27.

Turning Power Off

The preferred method of turning on the Solar 9500 power off is to first shut the system down by using the on-screen menu command, then use the on/off mains power switch located on the back of the unit.

CAUTION
Do not move the system while turning power off. Wait 40 seconds after removing power before moving the system.

Using the Menu Command

To power down the processing unit, select the *Setups* button on the bottom of the primary display. Next select the *Configuration/Service* menu option. This will take you to the *Configuration* menu, where you can select *Shut System Down*.... A confirmation screen displays.

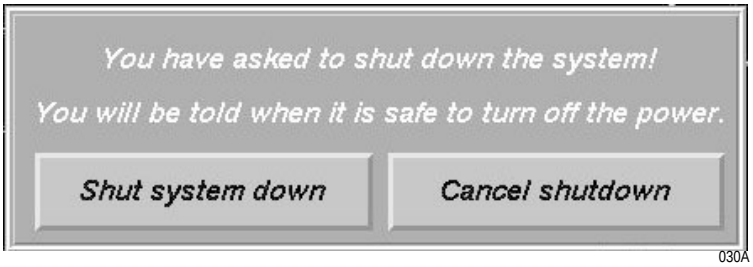

Select *Shut system down* to start the orderly shut down process. Wait until the message *Caution: Do not move the Solar 9500 monitor for 40 seconds after turning power off* appears and complete the shut down by pressing the 0 on the on/off power switch on the back of the processing unit.

Alternate Power Down Method

If necessary, you can directly turn off the Solar 9500 with the on/off switch. However, the system sees this as an AC power failure which causes it to run on the internal battery followed by a start of the automatic shutdown procedure. Since the battery is intended for orderly shutdown during an AC failure condition, we recommend that you shut down the system through the menu command. With a new, fully charged battery, only 13 continuous shutdowns are supported before a recharge is necessary.

CAUTION
Do not move the system while turning power off. Wait 40 seconds after removing power before moving the system.

For your notes

4 Software Configuration

Monitor Service Menu

The Service Menu is for use by qualified field engineers and factory service personnel to configure and service the Solar 9500 Information Monitor.

CAUTION
The Service Menu is intended for use only by qualified personnel. Unnecessary tampering with service mode menu options for experimentation purposes may cause a malfunction of the equipment and is not recommended by the manufacturer.

To access the SERVICE MODE menu, execute the following menu sequence, starting from the MAIN menu:

Setups

Configuration/Service...

Service mode...

At the numeric touchscreen keypad, enter the day and month using leading zeros. (July 4 = 0407)

The following Service menu screen displays.

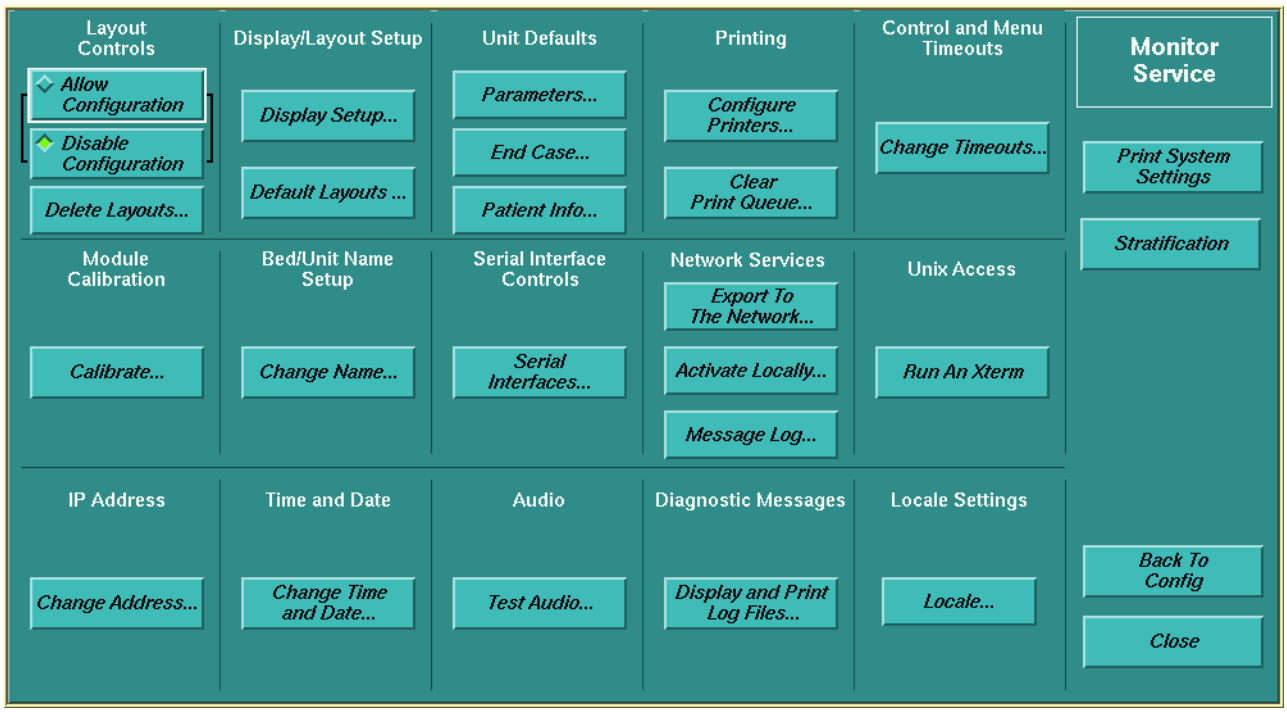

031B

Layout Controls

NOTE

Configuration editing is an optional software package. If your Solar 9500 is not enabled for configuration editing, the *Layout Controls* will be inactive.

Allow Configuration

Configuration editing allows you to create, modify, and save screen layouts. Configuration editing uses a number of windows to help you design your screen. These windows are combined and layered to maximize functionality and to permit you to configure the Solar 9500 according to your personal preference.

Configuration editing functions are addressed in greater detail later in this chapter.

Select *Allow Configuration* and the words *Configuration ON* display in red at the top of the primary display to show that configuration editing is enabled.

Disable Configuration

When you are finished with configuration editing, turn configuration editing off. Configuration editing can be disabled from the service menu by selecting *Disable Configuration* or from the *Setups* menu by selecting *Turn layout configuration off*.

Delete Layouts

A layout is the base layer or background canvas of the screen layout (including Parameter blocks, buttons and waveform windows). Selecting *Delete Layout* opens a display that allows you to choose which layouts to remove.

NOTE

Currently active layouts, layouts listed in the *Layout Setup* menu, and GE clinical layouts cannot be deleted.

Display/Layout Setup

Selecting *Default Layouts...* displays the *Application-Layout Setup* window. If your unit has optional graphics cards, you can program the *Default Layouts* for additional displays and define the default layout to be used on each display.

Under *Layout Setup* choose the default layouts for the *Primary*, the *Secondary*, the *Remote 1* and *2*, and the *Patient View*. *Layout Setup* shown is for a system with 3 displays.

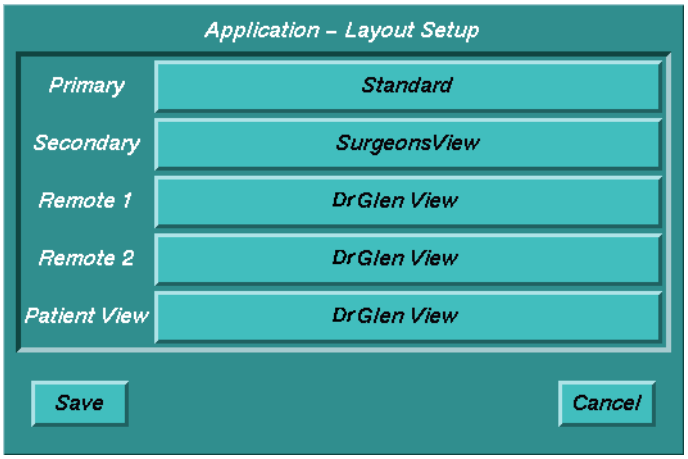

032A

Screen Description Options

Selecting *Display Setup...* displays the *Application Display Setup* screen. For each video output, choose the *Screen Description*. Each application can be assigned to any of the available video outputs whose screen descriptions are *Primary*, *Secondary* or *Apps Only*. The column labeled *Motherboard Main* refers to the graphics port on the Solar 9500 motherboard. The column *Video Slot A* refers to the first add-in video card, the column *Video Slot B* refers to the second add-in video card. A highlighted green circle indicates which video/screen description the application appears on.

NOTE

An application can be assigned to only one display. Screen descriptions cannot be duplicated, each must be unique. (e.g. If *Primary* is selected for one video output, then *Primary* cannot be selected for another video output.)

The *12SL* and *Browser* applications are optional software packages. These applications can only be assigned if they are enabled. The *Browser* can only be run on the Motherboard Main video connection (non-scrolling) and requires a screen description of *Primary*, *Secondary*, or *Applications Only*.

You cannot assign any non-real-time applications to a display that doesn't have a user input device such as a remote display.

Display Setup shown is for a system with 3 displays.

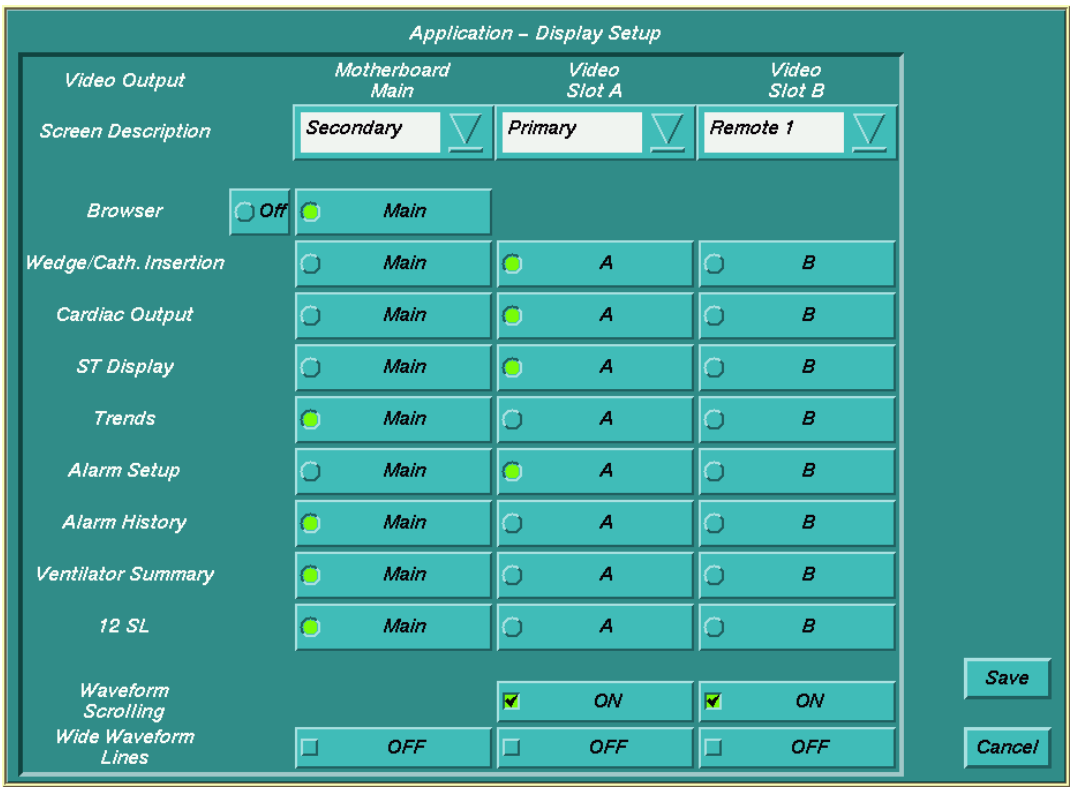

033B

Primary

The primary display is the first in a series of monitors or the sole monitor connected to the Solar 9500 processing unit. It is distinguished from the other monitors by the eight control buttons displayed at the bottom of the screen. Real Time data (parameter waveforms and numerics) and/or Non-Real Time data (a display with trends, alarm history, etc.) display on he screen.

Secondary

A secondary display has touchscreen capabilities and displays Real Time and/or Non-Real Time data on a two or three display system.

Remote 1, 2

A remote display is a view only monitor and not intended to be used as a touchscreen display. Only Real Time data displays. Up to two remote displays can be connected to the Solar 9500 processing unit.

NOTE

You cannot assign Non-Real Time applications to a remote display.

Unused

The display is not configured for use.

The base Solar 9500 system only supports non-scrolling waveforms using the Motherboard Main connection. For scrolling and non-scrolling waveform capability, the PCI bus add-in video board must be ordered. The Solar 9500 can support up to two add-in video boards. (Slot A and B.)

Waveform Options

Scrolling refers to the ability to continuously move the waveforms across the display. Non-scrolling waveforms are static with an “erase bar” moving across the display. As the erase bar sweeps the display, it erases the data in front of the bar and writes new data in back of the bar.

Turn *Waveform Scrolling* (erase bar mode) *ON* and *OFF* for optional graphics cards only. Turn on *Wide Waveform Lines* to make the waveforms bolder for distant viewing (e.g., a surgeon’s display).

After completing setup options, select *SAVE* to save or *Cancel* to remove the choices. When *SAVE* is selected the following message appears:

> *In order to make the display changes active a monitor reset is required. Press SAVE to save the changes and reset the monitor immediately. Press CANCEL to discard the changes and exit.*

WARNING
DO NOT make changes to the *Display Setup* while actively monitoring a patient because a reset of the unit is required and important data may be lost.

Unit Defaults

Parameters...

Selecting the *Parameters...* option under *Unit Defaults* displays the *Setup Parameter Defaults* window. All of the parameter menu options as well as arrhythmia and parameter alarm limits, alarm levels and alarm volume can be accessed, modified, and saved as unit defaults.

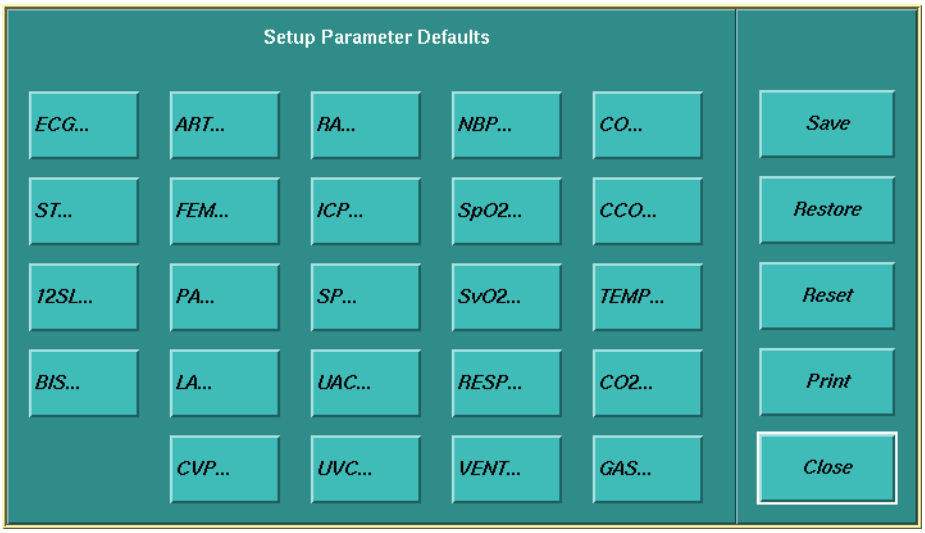

034B

Setup Parameter Defaults

In the *Setup Parameter Defaults* window, there are buttons for each available parameter. Select the appropriate button to open the corresponding defaults window and view or modify the current default settings for an available parameter. Refer to “Individual Parameter Windows” on the following pages.

CAUTION

Incorrect Parameter Settings. Changing the parameter defaults does NOT affect the current parameter and alarm settings until you select *Save*, and then *Restore* on the *Setup Parameter Defaults* screen.

NOTE

The difference between run-time changes and parameter default changes is whether the parameter is accessed through the main menu or the service menu. Parameter menus accessed from the main menu, display “Control” in the upper-right corner whereas they display “Defaults” via the service menu. For example, “ECG Control” vs. “ECG Defaults.”

NOTE

When setting the parameter defaults for CO2, only the CO2 waveform scale, CO2 units, and CO2 color can be set. The CO2 modules, the SAM, and the RAMS all have other parameter configuration defaults that cannot be changed. Examples are: O2 waveform scale, O2 units, O2 color, N2O compensation (either on/off or a percent), and O2 compensation.

Alarm Defaults

To set alarm defaults, select a parameter from the *Setup Parameter Defaults* window, then select *To Alarm Setup...* The *Alarm Defaults* window displays (see next page).

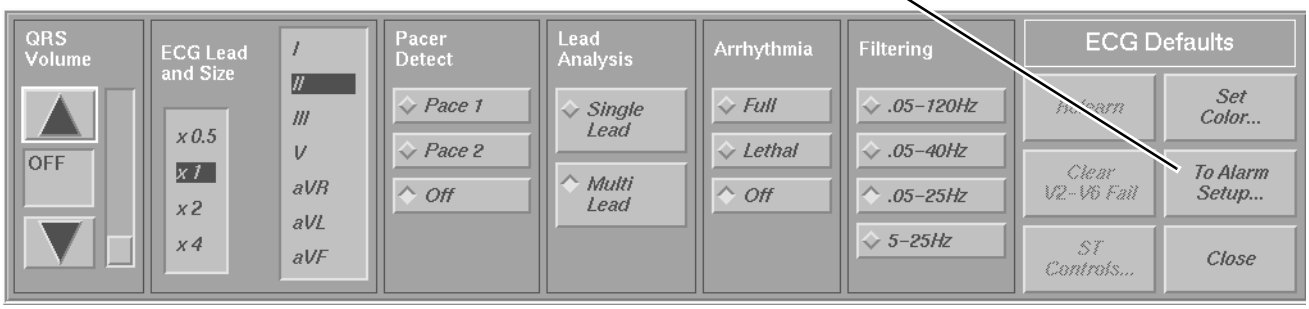

035A

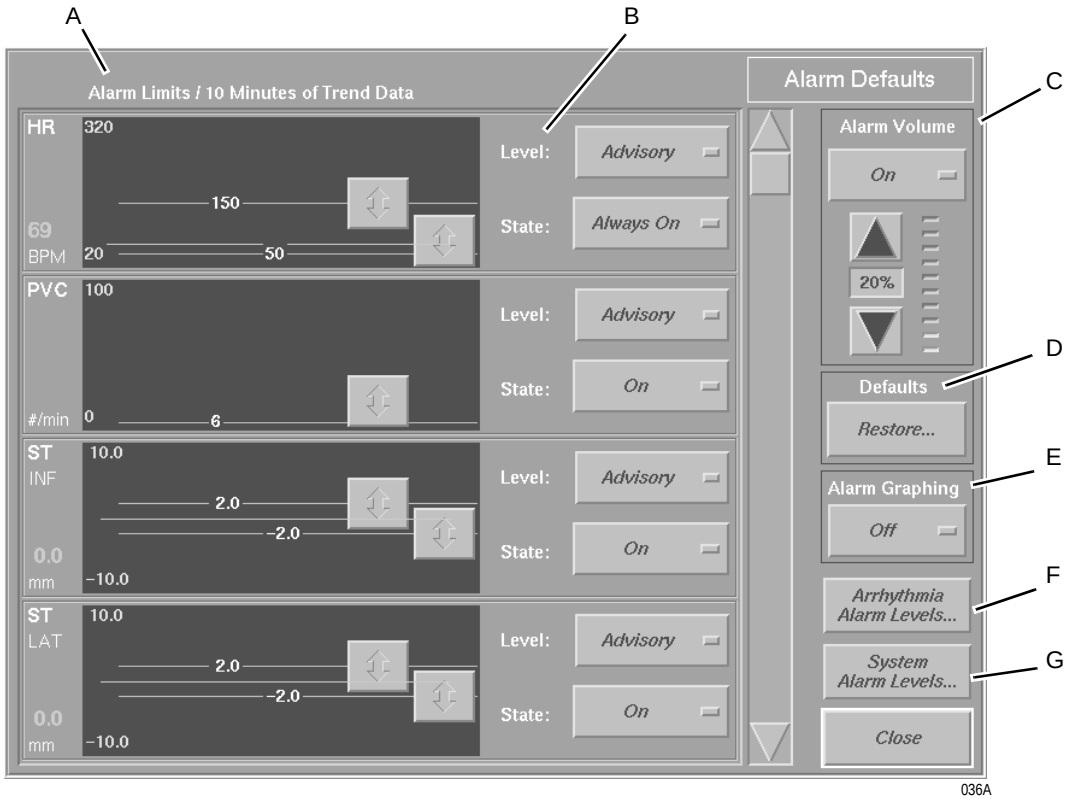

A	*Alarm Limits*	Set alarm limits on the left side of the screen by selecting the up/down arrows.
B	*Alarm Level and State*	Set alarm levels to *Crisis*, *Warning*, *Advisory* or *Message*. Set alarm state to *On*, *Off*, or *Always On*. **NOTE:** Setting an alarm state to *Always On* means that the user does not have the option to change the individual parameter alarm to the *Off* state.
C	*Alarm Volume*	Set alarm volume by selecting the up/down arrows. Set alarm volume to *On*, *Off*, or *Always On*. **NOTE:** Setting the alarm volume to *Always On* means the user does not have the option to turn the alarm volume off.
D	*Defaults*	Select *Restore...* to restore alarm defaults to either *User Defaults* or *GE clinical layouts Defaults*.
E	*Alarm Graphing*	Set alarm graphing to *On* or *Off* to enable or disable automatic graphing of alarms as they occur.
F	*Arrhythmia Alarm Levels...*	Select *Arrhythmia Alarm Levels* to open the *Arrhythmia Defaults* window. All 15 monitored arrhythmia conditions have alarm level choices *Crisis*, *Warning*, *Advisory* or *Message*.
G	*System Alarm Levels...*	Select *System Alarm Levels...* to open the *System Alarm Defaults* window. Set *ECG Leads Fail* and *SpO2 Probe Off Patient* to *System Warning* or *System Advisory*.

NOTE

After modifying any defaults remember to return to the *Setup Parameter Defaults* window and select one of the following options.

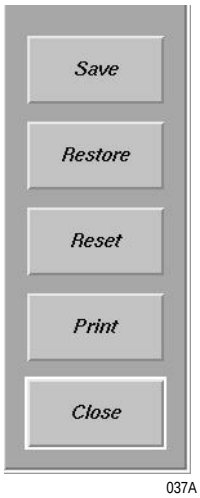

Save – After modifying a parameter default settings, select *Save* to save the changes.

Restore – Select *Restore* to restore the most recently saved settings. When *Restore* is selected, a message window opens:

> *This will change all parameter settings back to the user default settings. Do you wish to continue?*

Select *Yes* to change the settings, or *No* to close the message window without making changes.

Reset – Select *Reset* to reset all settings back to the original factory settings. When *Reset* is selected, a message window opens:

> *This will change all parameter settings back to the original GE clinical layouts default settings. Do you wish to continue?*

Select *Yes* to change the settings, or *No* to close the message window without making changes.

Print – Select *Print* to initiate a printout of the saved user default settings for all of the available parameters.

GE Medical Systems *Information Technologies* recommends printing default settings after making changes.

Close – Select *Close* to close the *Setup Parameter Defaults* window.

End Case...

Select *End Case...* to set the default behavior when the *End Case...* button is selected.

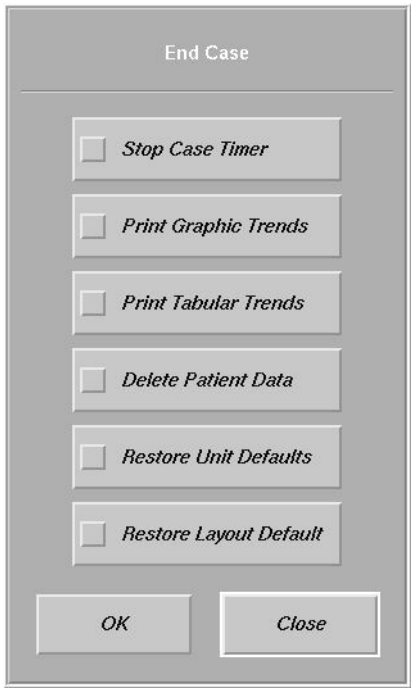

038A

Patient Info...

Select *Patient Info...* to set the default units of measure for patient information.

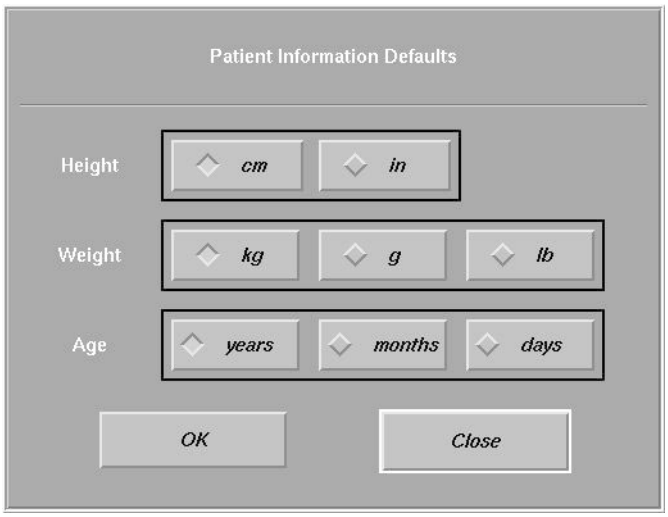

039A

Printing

Patient data on the Solar 9500 can be printed for review to a PostScript compatible printer or writer. The Solar 9500 supports both parallel and network printers. A network printer shares the network with other Solar 9500 monitors. (This means it is not connected to any one particular Solar 9500 monitor). However, there must be one Solar 9500 on the network that is configured with the printer's name and address. If there is more than one printer on the network, each must have its own name and address. The Solar 9500 configured with that name and address then controls and queries that printer on the network for its status.

Refer to "Serial Interface Controls" on page 16 for instructions on configuring a port for a printer or writer.

Configure Printers...

Select *Configure Printers...* to open the *Net Printer Setup* window.

NOTE

Configure Printer... is only used for setting up network printers. Parallel printers do not need configuring. PRN 50 and PRN 50-M digital writers are configured in "Serial Interface Controls" on page 16.

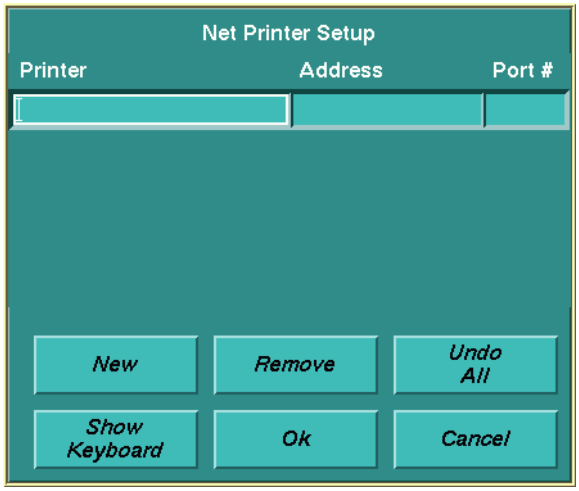

040B

The following options are available:

- *New* allows you to add another printer to the list.

  When adding a printer to the network it is necessary to enter the Name by which the printer will be referred to, the IP Address of the printer, and the Port Number of the printer. The port number may be found in the printer's network documentation. For example, Hewlett Packard LaserJets use Port # 9100.

- *Remove* allows you to remove a printer from the list.
- *Undo All* allows you to erase all changes made.

- *Show Keyboard* displays an on-screen keyboard. This button switches to Hide Keyboard when pressed. Select Hide Keyboard to remove the keyboard from the display.
- *Ok* closes the window and prompts you to reboot. (You may choose not to reboot, but changes are not effective until you do.)
- *Cancel* allows you to cancel the changes and closes the window.

NOTE

A parallel port printer does not need configuration and is not configured with this window.

To test the network printer(s), choose *Select Printer...* from the Setups menu. Select a network printer and print the Software Revision page. It may take up to 5 minutes before the printer name(s) are displayed in the Network Printers window.

Clear Print Queue...

Select *Clear Print Queue...* to remove data waiting to be printed to a printer. The following confirmation screen displays.

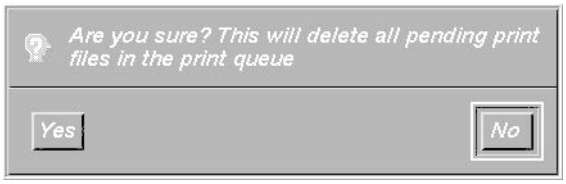

041A

Controls and Menu Timeouts

Select *Change Timeouts...* to set the length of time a pop-up window stays open. The choices are *15 seconds*, *30 seconds*, *1 minute* and *No Timeout*.

NOTE

Service related windows do not time out.

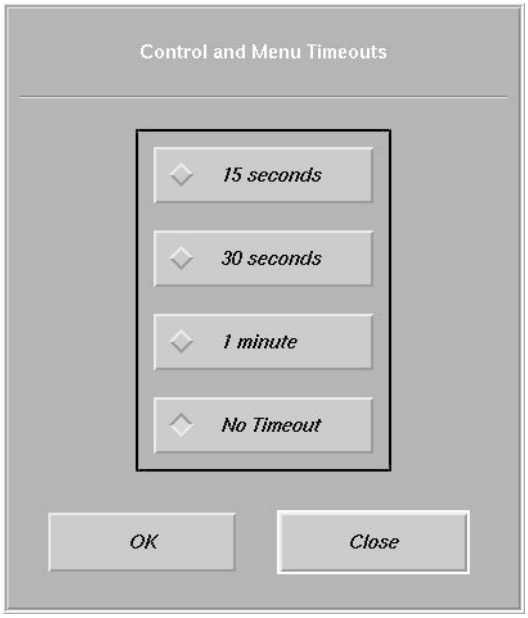

042A

Module Calibration

Select *Calibrate...* in the *Module Calibration* window to calibrate a module. Calibration menus are provided for CO2 and NBP.

NOTE

These buttons to display the calibration means are active only if the associated Parameter is active and a module is present.

An on screen keypad is also available for all calibration windows where numeric entry is required. See chapter 5, Module Calibration for further information on module calibration.

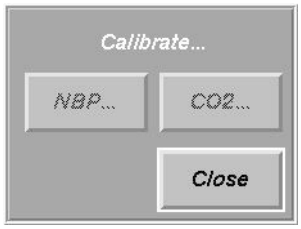

043A

Bed/Unit Name Setup

The *Bed/Unit Name Setup* allows you to enter the bed and unit name. Select *Change Name...* to open a window with two data entry fields and *Show Keyboard*, *Ok* and *Cancel* buttons. The data fields are *Unit Name* and *Bed Name*.

044A

To enter data, select the *Show Keyboard* button. You can now use the onscreen keyboard to enter the unit name. After entering the unit name, press the *Tab* button on the screen keypad to advance the cursor to *Bed Name* or on to *Hide Keyboard*. (You can also put the cursor in either field by touching the screen.) When complete, select *Ok* to close the window and save the changes or select *Cancel* to close the window without saving.

Serial Interface Controls

Select *Serial Interfaces...* to open the Serial Port Configuration Control window.

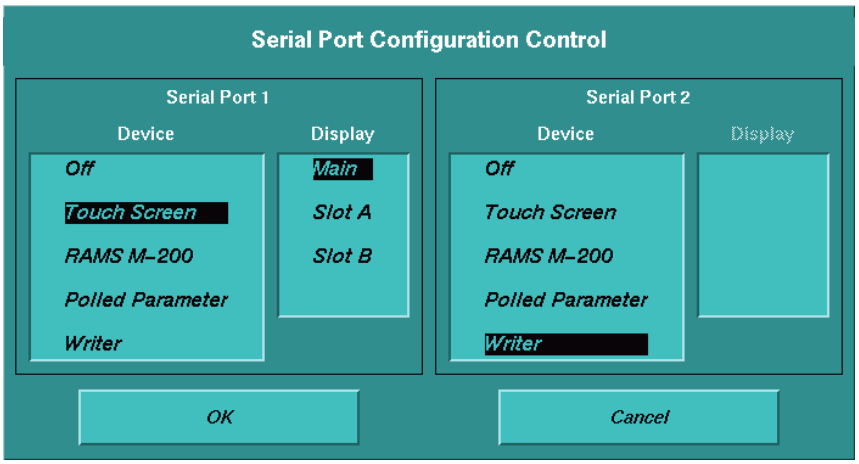

045A

In this window you define what device is connected to Serial Port 1 and Serial Port 2. Under Serial Port 1 and Serial Port 2 are two choice lists labeled Device and Display. The Device list includes *Off*, *Touch Screen*, *RAMS M-200*, *Polled Parameter*, and *Writer*.

When *Touchscreen* is selected, the options *Display 1*, *Display 2* or *Display 3* (depending on the number of displays currently available) appears in the *Display* box.

Select *Writer* when a PRN 50 or PRN 50-M is connected.

NOTE

If the serial port is configured for a writer, a PRN 50 or PRN 50-M connected to an M-Port will not be recognized by the Solar 9500.

Patient data (Trends, Arrhythmia Review, Alarm History, etc.), Procedures (CO, PA, Wedge, 12SL, etc.) and System information (error logs, etc.) are not supported on a writer.

After making your selections choose *OK* or *Cancel*. A confirmation screen appears for you to confirm any changes.

NOTE

When touchscreen calibration of the display is required, it may take several seconds for the background tasks to complete before the calibration screen appears.

When calibrating the touchscreen, only touch the displayed calibration target. Otherwise, the target area for selecting screen items will be out of position.

Because *Polled Parameter* is a user-purchased option, it may not be selectable.

Direct Digital Writers (DDW) are NOT supported by the Solar 9500.

Network Services

The Solar 9500 system uses the Unity Network to send Layouts, Parameters and Alarm defaults, and Solar 9500 software to other Solar 9500 beds in the same care unit or other care units on the network.

Unix Access

This window is used to diagnose system problems if the user interface is functional.

Select *Run An Xterm...* to display a window that allows interaction with the Operating System. When this window opens it displays a system name prompt (i.e., S9500-*xxxx*%). To close the *Run An Xterm* window touch the close icon in the upper right corner of the X-term window or, from a keyboard, type the word **exit** then press **Enter**.

CAUTION
Use caution when running an Xterm. Critical data may be unintentionally altered or deleted. This window is for system diagnosis by GE service personnel.

IP Address

Select *Change Address...* in the *IP Address* window to open two windows, one with the current address, netmask and action buttons, *OK* and *Cancel* and the other with a numeric keypad.

CAUTION
The IP address of the Unity Network MC network has been set at the factory to be unique. When changing the IP address, make sure no other equipment on the network has the same address. When connected to the network the Solar 9500 will warn the user if duplicate IP addresses have been assigned.

046B

When *Change Address...* is selected:

- an IP Address window and numeric keypad appear,
- the current IP Addresses and netmasks display if they have been entered,
- the numeric keypad allows you to enter an address or netmask,
- you can select *OK* to exit and store,
- you can select *Cancel* to exit without saving, and
- if *OK* is selected, a confirmation box appears so you can confirm any change.

The following network addresses are invalid:

- First octet of network address >239
- 1.0.0.0
- 1.1.0.0
- 1.1.1.0
- 0.1.0.0
- 0.0.1.0
- 1.1.1.0
- 127.0.0.1 (loopback address)
- Addresses currently in use on the network

Browser Server

The Browser Server IP address must be a legal address on the Unity Network IX network. The example below shows an acceptable and an unacceptable address.

	Acceptable	**Not Acceptable**
IX Network	151.1.2.3	151.1.2.3
Browser Server	151.1.2.2	151.1.3.3
Netmask	255.255.255.0	255.255.255.0

About Netmasks

The variable netmask capability of the Solar 9500 allows for an advanced network with intelligent routers. Typically for the Unity Network MC network the netmask should be 255.0.0.0. For the Unity Network IX network the netmask should be set to match the rules for subnet segments as defined by the institution's network topology.

Time and Date

Changing time and date occurs immediately on all display devices.

NOTE

When a monitor is connected to the MC network, the time and date is automatically updated from the network time.

WARNING

Loss of patient data history. Changing the time or date settings may result in the loss of patient data history. If one monitor's time or date is changed, all monitors on the network 'listen' and follow suit within 3-5 seconds. Changing the time base of one monitor may cause some loss of patient data history for all the monitors on the network.

When you select *Change Time and Date...* the *Time and Date Control* window displays.

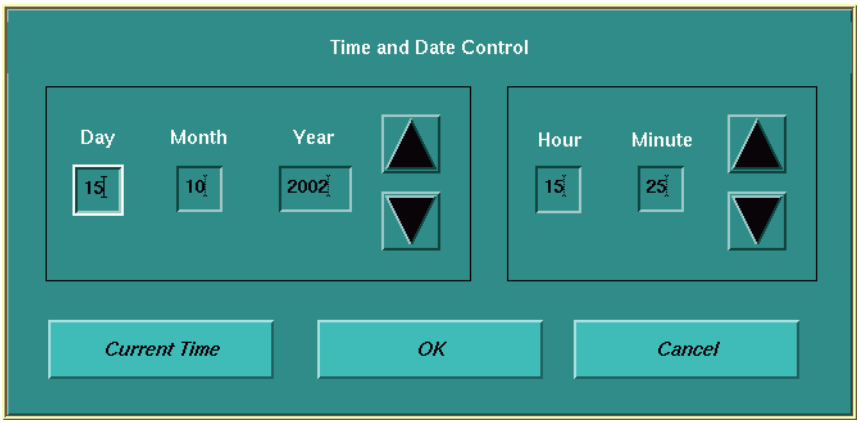

047B

You can change the *Day*, *Month*, *Year*, *Hour* and *Minute* by selecting a numeric field and using the arrow buttons to increase or decrease the number. You can take one of the following actions:

- Select *Current Time* to reset the time based on the current time of the system clock.
- Select *OK* to display the message, *"Press 'Change' to change the time. Press 'Cancel' to ignore the time change."*
- Select *Cancel* to exit without saving.

Audio

Select *Test Audio...* to open a window with a slider bar to adjust the test audio volume from 0 to 100% and two buttons, *Play Tone* and *Close*.

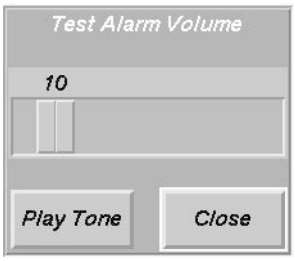

049A

To test the audio subsystem do the following:

1. Move the slider to desired volume level.
2. Select *Play Tone* for a tone.
3. Select *Stop Tone* to turn tone off.
4. Select *Close* to end test and close the window.

Diagnostic Messages

Under Diagnostic Messages you can display and print all system and Tram Log Files. See chapter 7, Troubleshooting for more information.

Locale Settings

Use the *Locale Settings* option to change languages and country-specific features.

1. Select *Locale...* The following window appears.

050A

2. Select a language and/or country, then click *OK*. A dialog box similar to the following appears:

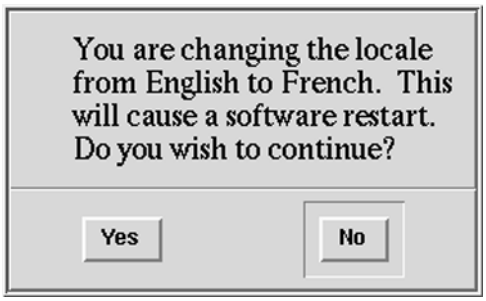

051A

3. Select *Yes*. The Solar 9500 restarts in the new language.

Creating a Custom Layout

The Solar 9500 Information Monitor allows you to create and configure custom screen layouts to suit your needs.

With configuration editing enabled, any of the windows on the screen can be resized from any corner. Windows can also be moved around on the screen, by grabbing the edge of the window.

NOTE

Windows cannot be moved outside of the bed window in which they were created.

If the layout you just configured is something you would like to reuse, save the layout before disabling configuration editing. For more information on saving a layout, refer to “Creating a Bed” in this chapter.

When Configuration Editing is enabled, pressing a command button, parameter window or waveform window, will cause a different option menu to be displayed instead of the normal action.

Editing Basics for All Customizable Windows

The following are basic editing principles for working with customizable windows.

WARNINGS

Do not configure the screen in such a way that parameter and alarm data is obscured. This could delay recognition of critical events when monitoring a patient.

Always turn layout configuration OFF when finished with configuration editing. Failure to turn configuration off may result in accidental configuration changes by the operator and loss of important data.

NOTE

Configuration editing must be enabled.

It may be easier to use a mouse for these operations. For all operations use the left button only. The right button is not used.

- Click and hold the cursor on the background of a window to display a pop-up menu listing options for that window.
- Select the edge of a window to show the ✥ cursor and allow it to be dragged to an appropriate spot on the display.
- Select any corner of a window to show a right angled or “L” shaped cursor and allow the window to be resized.

- All window pop-up option menus contain the *Delete* key which removes the window from the display.

052B

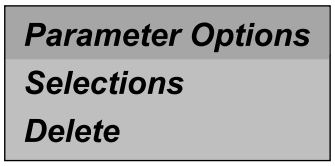

053A

Display Features

Below is a sample of the Solar 9500 Information Monitor display screen or Bed Window.

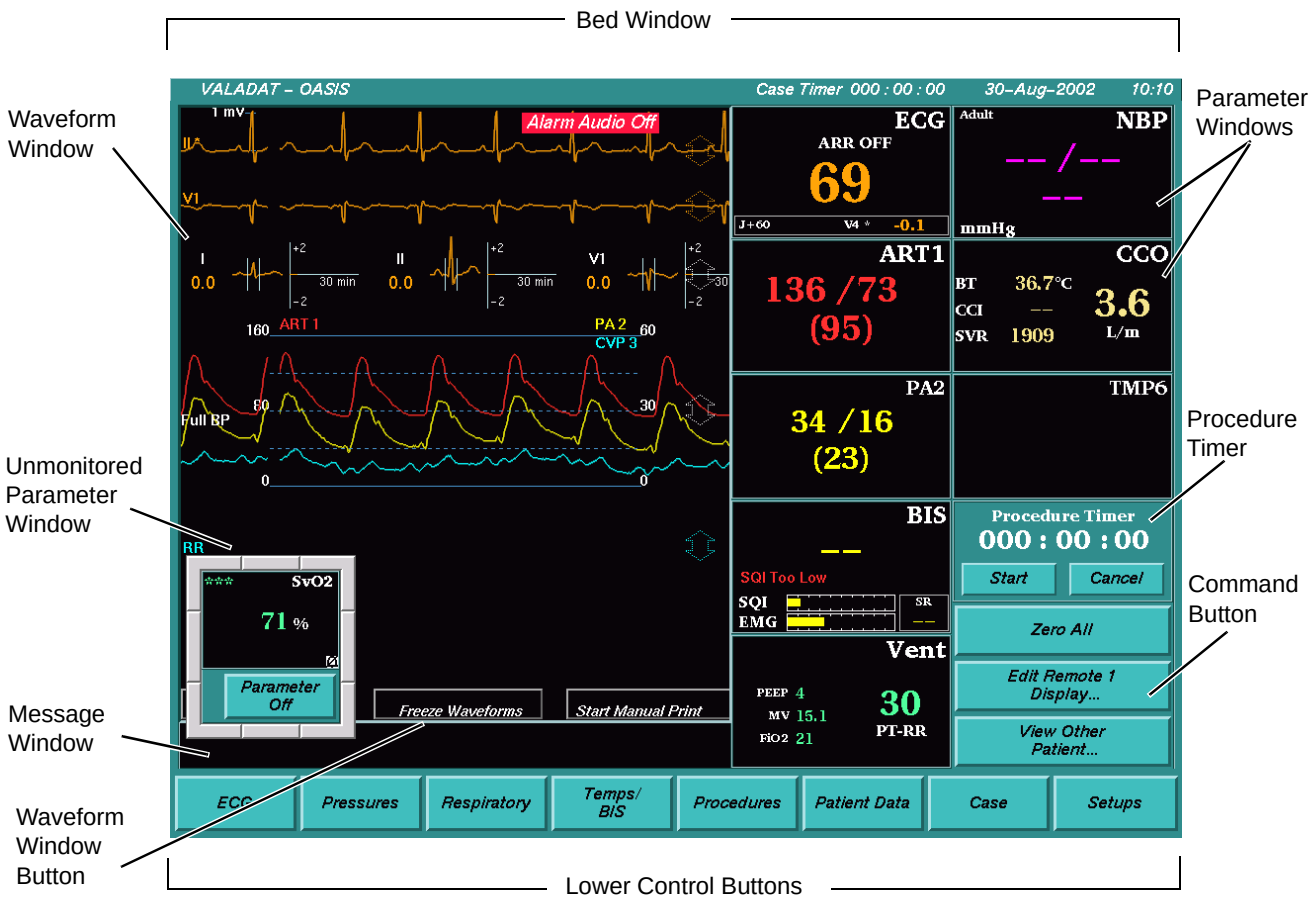

054B

An Overview of Configured Windows

Bed Window

A Bed Window is the top level of configurable windows. It contains other windows which can be saved and retrieved. Only one bed window can be displayed at a given time.

Waveform Window

Waveform Windows contain scrolling or non-scrolling waveforms. You can save and retrieve contents of a Waveform Window layout. Waveform Windows can also be configured to print.

Parameter Window

A Parameter Window contains parameter data for any one of the following:

- ECG
- BPs 1-8
- NBP
- Temp 1,6,8
- Respiration
- SpO2
- SvO2
- CO2
- Gas (Anesthetic Agent)
- Cardiac output
- BIS
- Vent
- CCO

Command Button

A Command Button ties a button to a command operation such as Silence Alarms, NBP Go/Stop, Zero All, View Other Patient, Switch Layout, To Alarm Setup, or Browser.

Message Window

A Message Window displays relevant system messages such as alarm state and print status.

Procedure Timer Window

A Procedure Timer Window functions like a stopwatch to allow specific procedures to be timed.

Subgroups Window

A Subgroups Window allows window layering functionality, with creation, save and retrieval of reusable building blocks.

Creating A Bed Layout

The top level of the configuration editing menu is Bed Options. This level allows you to create custom bed layouts using basic monitoring building blocks.

To access the Bed Options menu, touch or click anywhere in a blank area between the top header window and the lower control buttons. The Bed Options menu will now open displaying the following options:

- Save Bed
- Waveform Window
- Parameter Window
- Command Button
- Message Window
- Create Sub-group
- Retrieve Sub-group
- Procedure timer
- Background
- Delete

NOTE

If you are using a mouse for Configuration editing, click and hold the left mouse button to scroll down the menu. When you release the left button, the highlighted menu item is selected.

Bed Options

Save Bed – Allows you to name and save the currently displayed bed for future retrieval.

NOTE

Bed layout names may contain alphanumeric characters 0 – 9, A – Z, a space, a dash, and an underscore only.
If unacceptable characters are entered, a tone will sound.

Waveform Window – Allows you to create and configure a Waveform window.

After you've created the Waveform window, touch or click inside it to open the Waveform window options. Selecting Delete removes the waveform window.

For information on selecting waveforms to display in a waveform window, refer to the Solar 9500 Information Monitor Operator's Manual.

Parameter Window – Allows you to create and configure a parameter window.

After you've created the Parameter window, touch or click inside it to open the Parameter window options. Choosing Selections opens the parameter selection window, and choosing Delete removes the parameter window.

Within the Parameter selection window, you can define the parameter to be displayed in that parameter window.

Command Button – Allows you to create and configure a Command button.

After you've created the command button, touch or click inside it to open the Button options. Selecting Assign Function opens the Button setup window. Selecting Background opens the Background color selection window.

Within the Button setup window, select the appropriate function from the list of available options. These options are:

Switch Layout

Silence Alarms

Zero All

NBP Go/Stop

Alarm Setup…

View Other Patient…

Browser...

Edit Remote 1 Display

Edit Remote 2 Display

After highlighting your choice, select OK to activate your choice and close the window or select Close to close the window without making changes.

Message Window – Allows you to create and configure a Message window.

After you've created the message window, touch or click inside it to open the Message Options window.

To define the message type, select Message Selection. This opens the Message Type Selection window. This window offers choices of Window Type (choose from Alarm State or Scrolling Msgs) or Close. After defining the message type, select Background to define the background color for the message window, or select Delete to delete this message window from the display. Select Close to close this window.

Create Sub-group – Allows you to create a subgroup, or collection of windows, for configuring your display. Subgroups are usually made of commonly-used sets of parameter windows, waveform windows, command buttons, and message windows. These subgroups can be saved and retrieved for ease of customizing.

After you've created a subgroup, touch or click inside it to open the Sub-group options. Sub-group options include the following:

- Save Sub-group — allows you to name and save the subgroup for retrieval at a later time.

NOTE

Bed layout names may contain alphanumeric characters 0 – 9, A – Z, a space, a dash, and an underscore only.
If unacceptable characters are entered, a tone will sound.

- Command Button — allows you to create and configure a command button within the sub-group.
- Waveform Window — allows you to create and configure a waveform window within the sub-group.
- Parameter Window — allows you to create and configure a parameter window within the sub-group.
- Message Window — allows you to create and configure a message window within the sub-group.
- Procedure timer — allows you to create a procedure timer within the sub-group.
- Background — opens the Background color selection window, allowing you to set the background color of the subgroup.
- Delete — allows you to delete the sub-group.

Retrieve Sub-group – Allows you to retrieve a previously saved subgroup by bringing up the "Select Layout Configuration" window. Choose the desired sub-group from the list and select OK.

Procedure timer – Allows you to open a timer window. After you've created the timer, touch or click inside it to open the Timer options. Select Delete to remove the timer window.

Background – Allows you to open the Background color selection window, where you can set the background color for the bed.

Delete – Allows you to delete the entire bed window leaving just the background, for creating a new bed.

CAUTION

Use discretion when selecting Delete. All objects added to the bed layout will be removed immediately and without confirmation.

NOTE

If you accidentally delete a bed that has been previously saved, select Setups on the Lower Control Buttons then select Switch Layout... to bring up the Select Layout Configuration window. Choose the desired bed layout from this list and select OK.

Sample Creation of a Simple Bed Layout

To create a simple bed layout, follow these steps:

1. Turn on *Allow Configuration* which is found in the Service menu.
2. Delete the existing screen by finding a portion of the background, invoking the Bed Options pop-up menu and then selecting *Delete*. If the display is crowded, you may have to first delete other windows in order to get to the bed window's background.

Create a Waveform Window

3. Move the cursor into the middle of the bed window. Click and hold to invoke the Bed Options pop-up menu and select *Waveform Window*.
4. Move and resize the waveform window by grabbing the edge to move and the corner to resize. Make the window about 1⁄2 as high as the bed window.

Repeat the last two steps but place this waveform window directly below the first.

Create a Parameter Window

Setting up the Waveform Window:

5. In the top waveform window, press on the Configure Window in the lower left corner of the window. After the menu appears add several waveforms to the window by clicking on the toggle buttons.
6. Use the arrow in the waveform window to place the waveforms in the desired spot.

Repeat for lower waveform window.

7. Move the cursor into the open area of the bed window, invoke the pop-up and select *Parameter Window*.
8. Move the parameter window to the right of the waveform window.
9. Press in the middle of the parameter window to invoke the Parameter Options pop-up menu and select *Selections*.
10. Select a desired parameter.

Repeat and create several other desired parameter window.

Save the Bed

11. Invoke the pop-up menu over a blank area of the bed window and select *Save Bed* or choose the *Save Layout* option in the *Setups* menu.
12. Move the cursor to the text entry field and type **TEST**.
13. Press *OK*.

Test the Layout

To confirm that the TEST layout was saved, go to the *Setups* menu and select *Switch Layout*. When the selection menu appears select MMS Default then press *OK*. Now repeat, but select TEST instead.

Print System Settings

Select *Print System Settings* to print a Solar 9500 System Configuration Record.

NOTE

GE recommends printing the system configuration for each unit after completion of customer configuration. Retain copies for future reference.

The following information is on the Solar 9500 System Configuration Record:

IP Address Settings	Application - Display Setup	Stratification
Unity Network MC Riser IP Address	Motherboard Video Description	Arrhythmia Review Package
Unity Network MC Riser IP Netmask	Video Slot A Description	12 SL Package
Unity Network IX Motherboard IP Address	Video Slot B Description	Browser Package
Unity Network IX Motherboard IP Netmask	Waveform Scrolling	Layout Configuration Package
M-Port IP Netmask	Wide Waveform Lines	Serial Polled Parameters Package
Browser Motherboard IP Address	Browser Startup Display	**Default Unit Settings**
Application - Layout Setup	Wedge/Cath. Insertion Display	Bed Name
Primary Monitor Layout	Cardiac Output Display	Unit Name
Secondary Monitor Layout	ST Display	Language
View Only Monitor 1 Layout	Trends Display	Menu Timeout
View Only Monitor 2 Layout	Alarm Setup Display	End Case Defaults
Patient View Layout	Alarm History Display	**Network Printer Configuration**
Serial Interfaces	12 SL Display	Entry for each network printer
Serial Port 1 Device	Ventilator Summary Display	**Printer Selections**
Serial Port 1 Display	**Alarm Graph Setup**	Patient Data Printer
Serial Port 2 Device	ECG Leads	Procedures Printer
Serial Port 2 Display	BP Site	Manual Graph Printer
Default Patient Information	Other	Alarm Graph Printer
Default Patient Units	Chart Speed	System Printer
Default Location ID	Arrhythmia Print Duration	Remote Graph Printer
Default Site Number	Parameter Print Duration	
	Graticules	
	Grid	

Stratification

Select *Stratification* to configure software options. Each option is password controlled based on the ethernet address. This message displays:

> *A separate password is required to access each item. Contact GEMS-IT to obtain the password for the monitor. You will need your ethernet address:*
>
> *xx.xx.xx.xx.xx.xx* (where *x* = your monitor's ethernet address)

These options are:

- Arrhythmia Review - arrhythmia waveform review
- 12SL - 12 lead analysis
- Browser server access
- Layout Configuration - the ability to create and save customized layouts
- Polled Parameter - serial polled parameter service

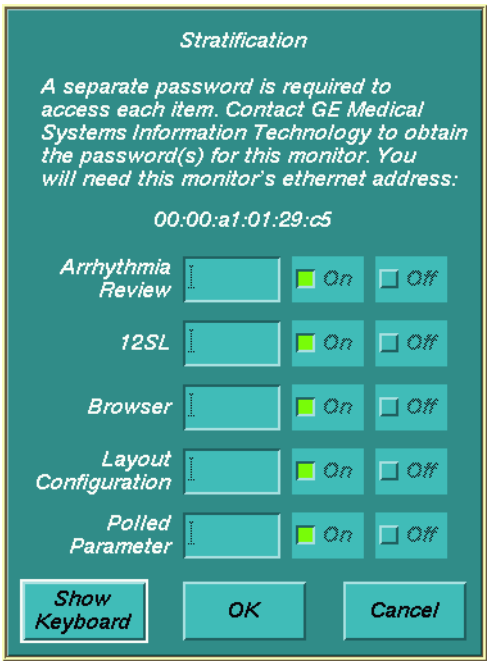

106A

5 Module Calibration

General

Module or sensor calibrations are performed on the CO2, Anesthetic gas, SVO2, and NBP (Tram) modules. Some of the module/sensor calibrations can be performed by the user; others must be performed by service personnel only. The following list describes the module and in which manual the procedure is described.

NBP (Tram)	This manual - This chapter.
MGA-IR Mainstream CO2 Module	This manual - This chapter.
MGA-IR Sidestream CO2 Module	This manual - This chapter.
Capnostat Mainstream	Solar 9500 Operator's Manual
Capnostat Dual CO2 Module	Solar 9500 Operator's Manual
SAM/SAM 80	Solar 9500 Operator's Manual and SAM/SAM 80 Service Manual
SVO2	Solar 9500 Operator's Manual
RAMS	RAMS Service Manual

The Service Menu

The Service Menu is for use by qualified personnel to troubleshoot, repair or configure the Solar 9500 Information Processor.

CAUTION
The Service Menu is intended for use only by qualified personnel. Unnecessary tampering with service mode menu options for experimentation purposes may cause a malfunction of the equipment and is not recommended by the manufacturer.

1. To access the SERVICE MODE menu, execute the following menu sequence, starting from the MAIN menu:

   Setups

   Configuration Service...

   Service mode...

2. At the numeric touchscreen keypad, enter day and month from monitor screen with leading zeros. (July 4 = 0407)

   Enter Password

The following Service menu screen displays.

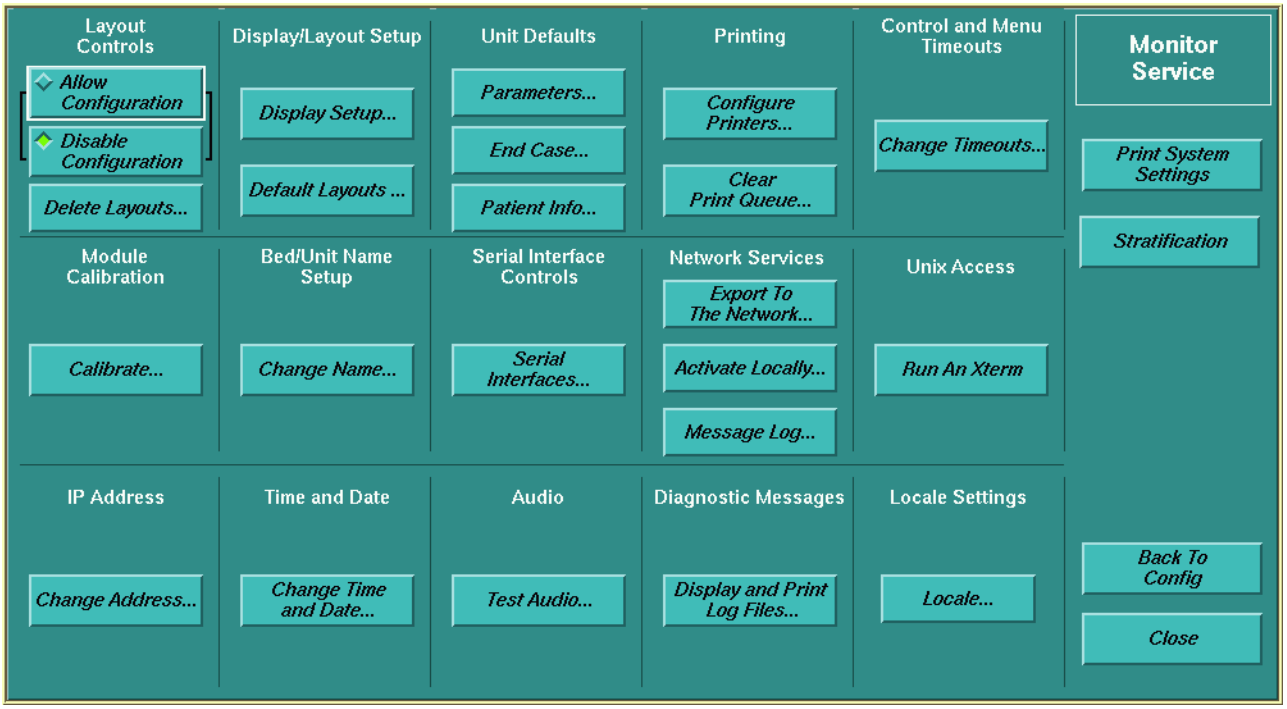

031B

3. In the *Module Calibration* section, select *Calibrate...* The *Calibrate...* window with buttons *NBP...*, *CO2...* and *Close* display.

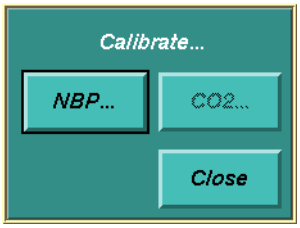

060A

NOTE

These buttons are active only if their Parameters are present and turned on.

Calibrate Non-invasive Blood Pressure (NBP)

About the Procedure

The overall accuracy of non-invasive blood pressure (NBP) readings by the monitor depend on the following:

- the zero pressure reading, and
- the voltage span of the NBP sensor in the monitor.

This procedure provides a method of verifying these items are accurate and also checks the NBP pneumatic circuit plumbing for leaks.

Manufacturer Recommendation

The manufacturer recommends performing this procedure upon initially receiving the monitor, before it is used on a patient, and once each year thereafter. Also, perform the procedure each time the monitor is opened for service or repair, simply to verify the NBP pneumatic circuit plumbing did not develop inadvertent air leaks.

Test Equipment

The following items are required to complete the NBP calibration procedure:

- Manometer (Sensym PDM200M or mercury manometer),
- NBP tube, pn. 414873-001,
- NBP cuff, pn. 9461-301 (any size will work),
- Something to wrap the NBP cuff around (PVC pipe or other tube),
- NBP bulb (hand pump) to manually over-inflate the cuff.

The table below lists items for connecting the NBP tube between the manometer and NBP cuff:

Description	Part Number	Quantity
NBP cuff coupling	400787-001	1
NBP hose coupling	46100-002	1
NBP tee	4745-101	2
Manometer tubing	401582-001	2 ft

WARNING
When the NBP cuff is used in this procedure, it must be tightly wrapped around a rigid cylinder or pipe. Do not put the NBP cuff around a human arm during the calibration procedures due to the potential for injury.

Calibration Procedure

1. Enter the Service Menu as described on page 5-3.
2. Select the *NBP...* button to display the *NBP Calibration* menu.

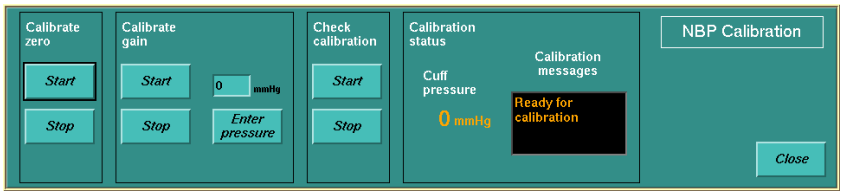

061A

NBP Zero Calibration

3. With the NBP cuff and tubing disconnected, perform a zero calibration.
4. Under *Calibrate zero* select the *Start* button. The message *Zeroing* appears in the *Calibration messages* area. When complete, the message *Zero Calibration complete* appears.
5. Connect a cuff and manometer to the monitor as shown on the following page.

NBP Calibration Setup

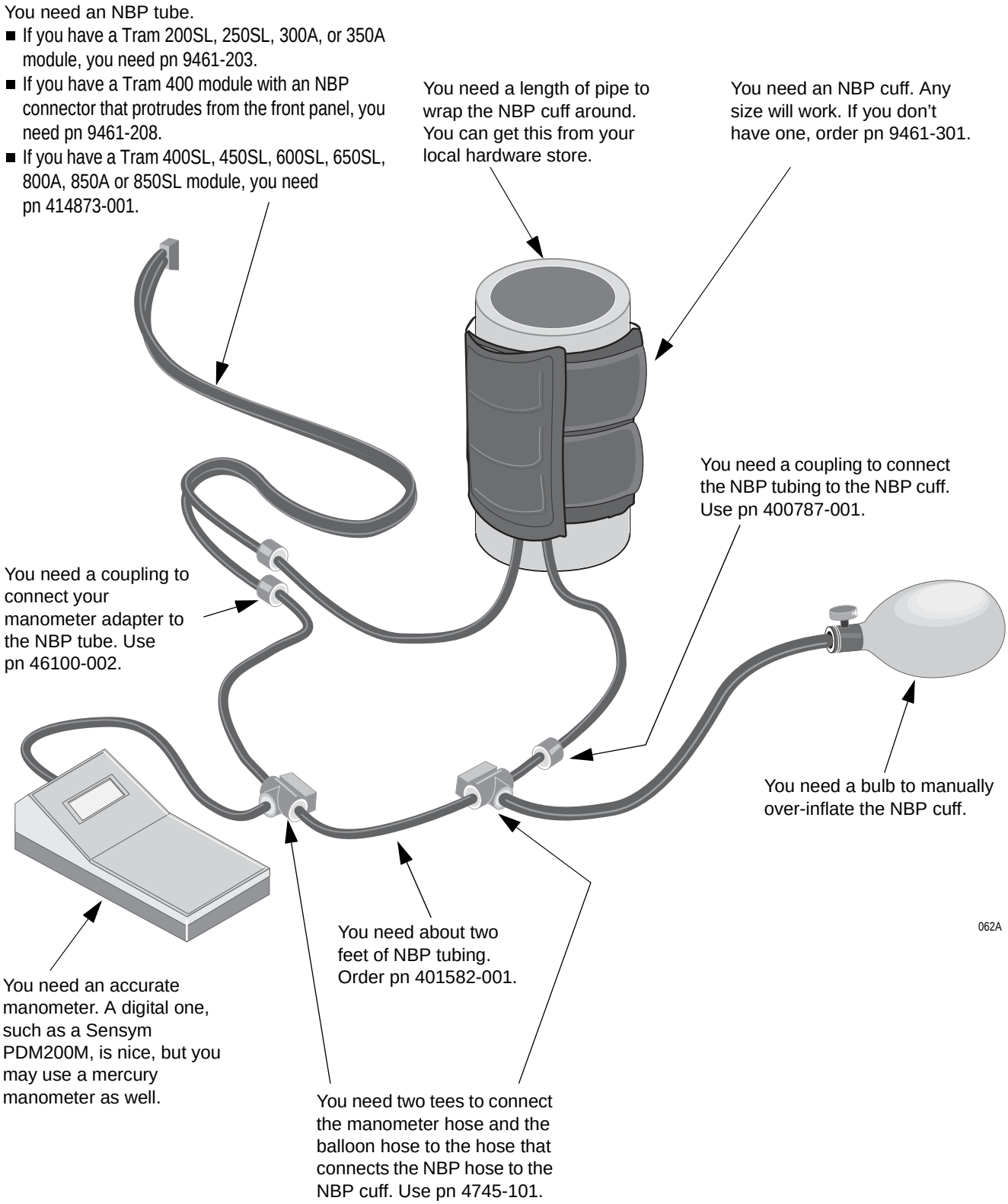

Set up the Manometer

6. Turn the manometer on and adjust the range switch to the 1000 mmHg setting.

Start the Gain Calibration Test

7. Under *Calibrate gain* select the *Start* button. The message *Inflating to cal* pressure displays in the *Calibration messages* window.

   The NBP module starts pumping up the cuff and the pressure in mmHg displays under the *Cuff pressure* text and on the manometer. When the pressure reaches approximately 250 mmHg, the pump shuts off and the pressure drops slowly to about 240 mmHg before stabilizing. If the pressure continues to drop at a rate of 1mmHg or more for every five seconds, there is a leak in the NBP plumbing. If there is a leak in the NBP plumbing, repair it and restart this calibration procedure.

8. When the pressure has stabilized, select *Enter pressure*. Use the on-screen keyboard to enter a pressure value that is one mmHg lower than the current manometer reading. The message *Gain calibration complete* appears in the *Calibration messages* window.
9. To verify the calibration select *Start* under *Check calibration*.
10. The message in the *Calibration messages* window changes to *Calibration check in progress*. Verify that the pressure readings (shown as CUFF in the NBP parameter box) on the monitor and manometer are equal (± 1 mmHg) for at least one full minute. The messages window changes to *At calibration check pressure*.
11. Select *Stop* under *Check calibration* and the message *Calibration check cancelled* appears in the window. The cuff will deflate.
12. As part of the leakage test, use the bulb (hand pump) to increase pressure beyond 300 mmHg. The monitor should deflate the cuff at pressures exceeding 330 mmHg.
13. End the test. Close all open windows.

NOTE

After approximately 5 minutes, the monitor will deflate the cuff and switch to normal operation.

14. Turn the manometer off and remove the test equipment from the monitor.

Calibrate Mainstream CO2

About the Procedure

This procedure provides a method of verifying the accuracy of the MGA-IR Mainstream CO2 module.

Manufacturer Recommendation

The manufacturer recommends performing this procedure upon initially receiving the module, before it is used on a patient, and once each year thereafter. Also, perform the procedure each time the module is opened for service or repair.

Test Equipment

The following items are required to successfully complete the CO2 calibration procedure:

Description	Part Number	Quantity
CO2 Module Calibration Kit	405910-001	1

Calibration Procedure

1. Connect the Calibration Kit to the MGA-IR Mainstream CO2 Module and Sensor as shown below.

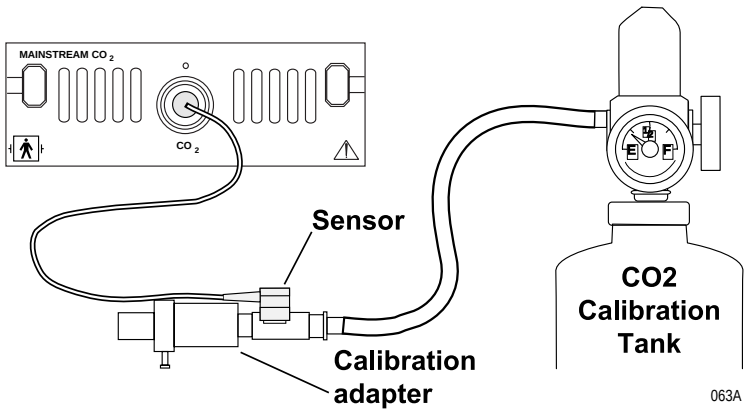

2. Enter the Service Menu as described on page 5-3.

3. Select the *CO2...* button to display the *CO2 Calibration* menu.

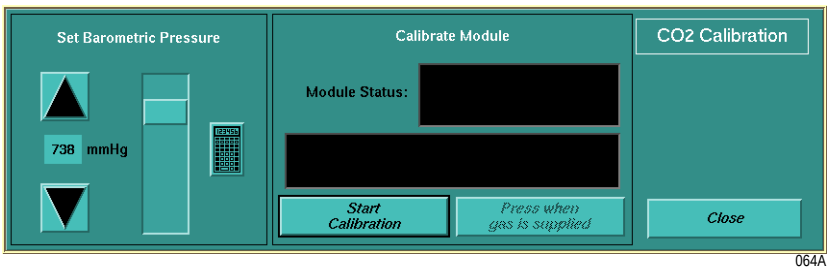

064A

4. Under *Set Barometric Pressure,* enter the current pressure by using the up and down arrows, the slide bar or touching the keypad icon and entering the pressure from the keypad pop-up.

NOTE

Barometric pressure is used to calculate the percentage of CO2 in the patient's airway from the mmHg value. This calculation is based on the following equation: %CO2 = mmHg CO2 x 100% / mmHg barometric pressure.

0% CO2 Calibration

5. Disconnect the calibration adapter from the tubing and move adapter through room air to induce 0% CO2 as shown below.

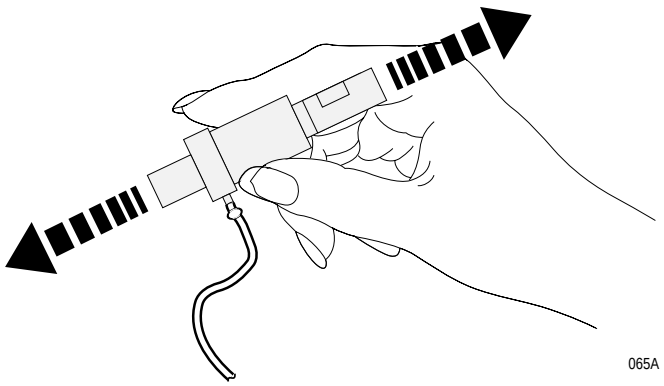

065A

6. Under *Calibrate Module* select the *Start Calibration*. The text on this button changes to *Abort Calibration*. The *Module Status* window displays the messages *Calibrating* and *Press button when 0% CO2 is supplied...*

NOTE

If you select *Abort Calibration* before 0% or 10% gases are entered, you must restart the calibration procedure.

10% CO2 Calibration

7. Select *Press when gas is supplied* and the messages change to *Waiting for 10% Gas* and *Press when 10% CO2 is supplied...*
8. Reconnect the calibration adapter to the tubing and apply 10% calibration gas to the airway adapter of the sensor. When CAL gas is applied during calibration, a waveform similar to that displayed below shows the CO2 level.

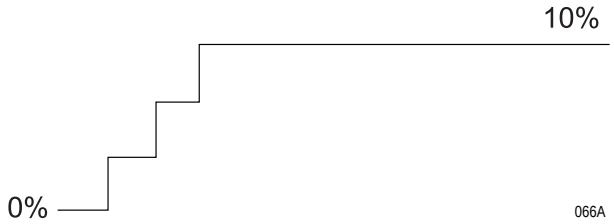

NOTE

To view the CO2 waveform, close the Service Menu window and move the CO2 calibration window.

9. Next, select *Press when gas is supplied* to begin 10% calibration.

A blanking out of both *Module Status* windows indicates that the calibration was completed.

Calibration Completion

If the calibration failed one of the following messages appear:

One Of The Cal Gases is Wrong

or

Bad 10% Gas Used

NOTE

The previously stored calibration factors are held if the calibration fails.

Calibrate Sidestream CO2

About the Procedure

This procedure provides a method of verifying the accuracy of the MGA-IR Sidestream CO2 module.

Manufacturer Recommendation

The manufacturer recommends performing this procedure upon initially receiving the module, before it is used on a patient, and once each year thereafter. Also, perform the procedure each time the module is opened for service or repair.

Test Equipment

The following items are required to successfully complete the CO2 calibration procedure:

Description	Part Number	Quantity
CO2 Module Calibration Kit	405910-001	1

Calibration Procedure

The calibration procedure is relatively simple and should be performed once per year. The calibration procedure is as follows:

1. Connect the Calibration Kit to the MGA-IR Sidestream CO2 Module and Sensor as shown below.

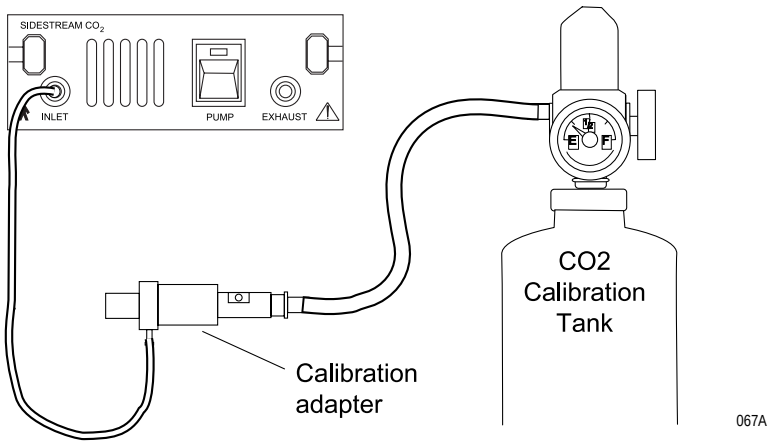

2. Enter the Service Menu as described on page 5-3.

3. Select *CO2...* to display the *CO2 Calibration* menu.

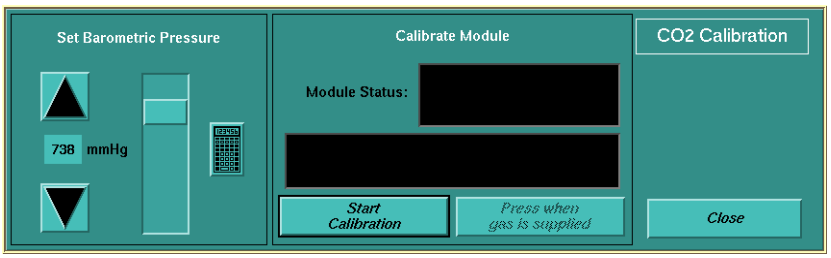

064A

4. Under *Set Barometric Pressure* enter the current pressure by using the up and down arrows, the slide bar or touching the keypad icon and entering the pressure from the keypad pop-up.

NOTE

Barometric pressure is used to calculate the percentage of CO2 in the patient's airway from the mmHg value. This calculation is based on the following equation: %CO2 = mmHg CO2 x 100% / mmHg barometric pressure.

0% CO2 Calibration

5. Disconnect the calibration adapter from the tubing and move adapter through room air to induce 0% CO2 as shown below.

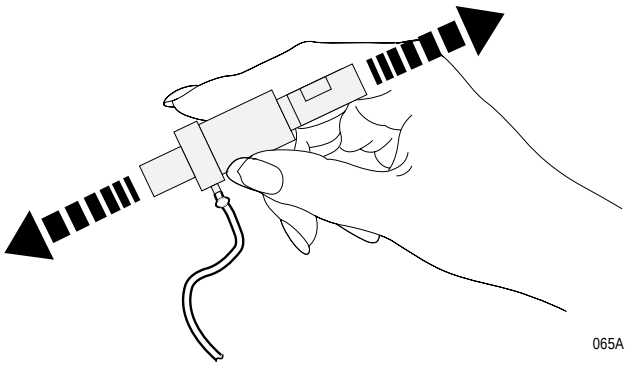

065A

6. Under *Calibrate Module* select *Start Calibration*. The text on this button changes to *Abort Calibration*. The *Module Status* window displays the messages *Calibrating* and *Press button when 0% CO2 is supplied...*

NOTE

If you select *Abort Calibration* before 0% or 10% gases are entered, you must restart the calibration procedure.

10% CO2 Calibration

7. Select *Press when gas is supplied* and the messages change to *Waiting for 10% Gas* and *Press when 10% CO2 is supplied*.
8. Reconnect the calibration adapter to the tubing and apply 10% calibration gas to the airway adapter of the sensor. When CAL gas is applied during calibration, a waveform similar to that displayed below will show the CO2 level.

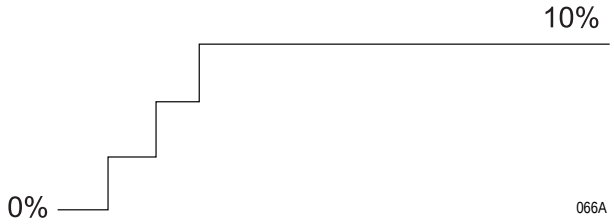

NOTE

To view the CO2 waveform, close the Service Menu window and move the CO2 calibration window.

Calibration Completion

9. Select *Press when gas is supplied* to begin 10% gas calibration.

A blanking out of both *Module Status* windows indicates that the calibration was completed.

If the calibration failed one of the following messages appear:

One Of The Cal Gases is Wrong

or

Bad 10% Gas Used

NOTE

The previously stored calibration factors are held if the calibration fails.

Calibrate Barometric Pressure for Interfaced CO2

About the Procedure

This procedure sets the barometric pressure for an interfaced CO2 using *Calibrate...* in the *Module Calibration* window of the Service Menu.

NOTE

The buttons to display the calibration means are active only if the associated Parameter is active and an interface device is present.

Procedure

1. Enter the Service Menu as described on page 5-3.
2. Select *Calibrate...* to display the following window.

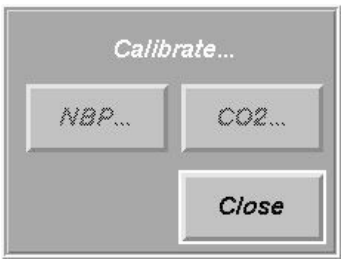

043A

3. *CO2...* will be active when an interface device with CO2 parameter is connected to the Solar 9500. Select *CO2...*

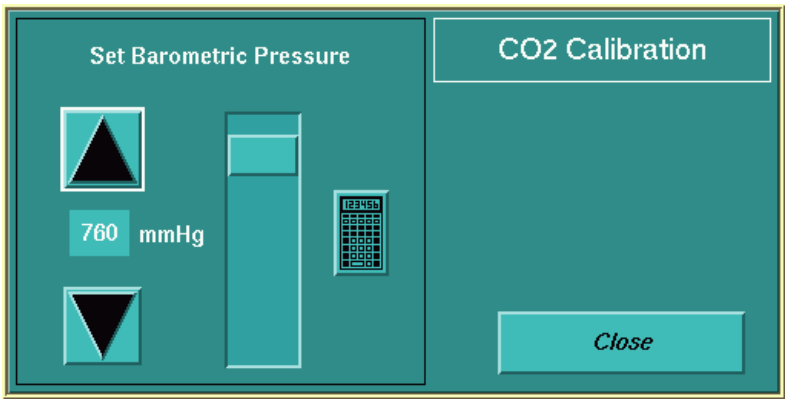

108A

4. Enter the current pressure by using the up and down arrows, the slide bar or touching the keypad icon and entering the pressure from the keypad pop-up.

NOTE

Barometric pressure is used to calculate the percentage of CO2 in the patient's airway from the mmHg value. This calculation is based on the following equation: %CO2 = mmHg CO2 x 100% / mmHg barometric pressure.

For your notes

6 Maintenance

Maintenance Schedule

Manufacturer Recommendations

To make sure the Solar 9500 Information Monitor remains in proper operational and functional order, a good maintenance schedule must be adhered to. The manufacturer recommends the following:

- **Visual Inspection:** This should be performed by service personnel upon receipt of the equipment, every 12 months thereafter, and prior to servicing the unit.
- **Cleaning:** This should be performed by service personnel upon receipt of the equipment, every 12 months thereafter, and each time the unit is serviced.
- **Electrical Safety Tests:** These should be performed by service personnel upon receipt of the equipment, every 12 months thereafter, and each time the unit is serviced.
- **Checkout Procedure:** This should be performed by qualified service personnel upon receipt of the equipment, every 12 months thereafter, and each time the unit is serviced.

Manufacturer Responsibility

WARNING

Failure on the part of all responsible individuals, hospitals or institutions, employing the use of this device, to implement the recommended maintenance schedule may cause equipment failure and possible health hazards. The manufacturer does not, in any manner, assume the responsibility for performing the recommended maintenance schedule, unless an Equipment Maintenance Agreement exists. The sole responsibility rests with the individuals, hospitals, or institutions utilizing the device.

Visual Inspection

The Solar 9500 Information Monitor and its components should be carefully inspected prior to installation, once every 12 months thereafter and each time the equipment is serviced.

- Carefully inspect the equipment for physical damage to the case, the display screen, the controls and the keyboard. Do not use the monitor if damage is determined. Refer damaged equipment to qualified service personnel.
- Inspect all external connections for loose connectors or frayed cables. Have any damaged connectors or cables replaced by qualified service personnel.
- Inspect the display face for marks, scratches, or other damage. Physical damage to a CRT face may pose an implosion hazard. Have the CRT replaced by qualified service personnel if necessary.

Cleaning

Cleaning Precautions

Use one of the following approved solutions:

- Cidex solution, or
- Sodium hypochlorite bleach (diluted), or
- Mild soap (diluted)
- Lint-free cloth
- Dust Remover (compressed air)

To avoid damage to the equipment surfaces, *never* use the following cleaning agents:

- organic solvents,
- ammonia based solutions,
- acetone solution,
- alcohol based cleaning agents,
- Betadine solution,
- a wax containing a cleaning substance, or
- abrasive cleaning agents.

Exterior Cleaning

To clean the exterior of the Solar 9500, follow this procedure:

1. Power down the Solar 9500 (according to the procedure outlined in chapter 3, Installation) and disconnect the display from the power source and the network.
2. Use a clean, lint-free cloth and one of the cleaning solutions listed above. Wring the excess solution from the cloth. Do not drip any liquid into open vents, switches, plugs, or connectors.
3. Dry the surfaces with a clean cloth or paper towel.

Cleaning the Touch Screen Display

To clean the Touch Screen Display, follow this procedure:

1. Turn OFF at the mains power switch on the display and disconnect it from the power source.
2. Clean the screen with an ammonia free glass cleaner and lint free cloth.

CAUTION
Do not spray any glass cleaning solution or any general cleaning solutions directly onto the monitor's display surface. Always dampen the towel and then clean the screen.

Cleaning Inside the Solar 9500 CPU

The Solar 9500 CPU uses a forced-air cooling system that draws air through the unit. As a result there can be a buildup of lint and other debris inside the unit. Accumulations of lint and debris can lead to thermal failures or short-circuit failures if not removed regularly.

It is recommended that the inside of the Solar 9500 should be cleaned every 12 months.

To clean the inside of the Solar 9500, follow this procedure:

1. Power down the Solar 9500 (according to the procedure outlined in chapter 3, Installation) and disconnect the monitor from the power source and the network.
2. Remove the front and rear covers from the device.
3. Loosen the two screws holding the power supply in place and swing the power supply down to expose the interior of the device.
4. Using a source of clean, dry compressed air blow all lint and debris from between the circuit boards and the other assemblies.

CAUTION
Do not use a vacuum device unless suitable static-control procedures are followed. Many vacuum systems generate appreciable static electricity which could damage semiconductor circuits in the monitor.

5. Make sure all circuit boards are seated firmly. Make sure all cables are connected.
6. Re-assemble the Solar 9500.
7. Perform leakage tests.
8. Connect the Solar 9500 to the network and to the power source.
9. Apply power to the Solar 9500 and verify operation.

Battery Pack Maintenance

The battery pack consists of 11 Nickel-Cadmium cells that deliver 13.2 volts of DC power. The battery pack provides a soft shutdown in the event of interrupted AC power.

The Riser Interface PCB (801376-001) has a capacity counter that keeps track of how many seconds of charge the battery pack has. Every time the Solar 9500 uses the battery to shutdown, the capacity counter decreases and as AC power is reapplied it increases. Four hours of charging time is equivalent to 18 seconds of discharge time. A fully charged battery pack has a capacity of 360 seconds and can handle about thirteen consecutive power interrupted shutdowns.

When a battery pack is replaced, the capacity counter on the Riser Interface PCB is zeroed. This is done to prevent the Solar 9500 from making a false assumption of the battery capacity. When the new battery pack is connected, it takes 80 hours for the capacity counter to reach 360 regardless of the true capacity of the battery.

Replace the battery pack every two years or when a battery failure is indicated during troubleshooting.

Battery Pack Replacement

1. Power down the Solar 9500 (according to the procedure outlined in chapter 3, Installation) and disconnect the monitor from the power source and the network.
2. Remove the front cover.
3. Loosen the seven screws around the EMI cover and remove.
4. Disconnect the battery pack cable from the Power Supply assembly.
5. Loosen the two nuts on the battery pack, replace the pack and retighten the nuts.

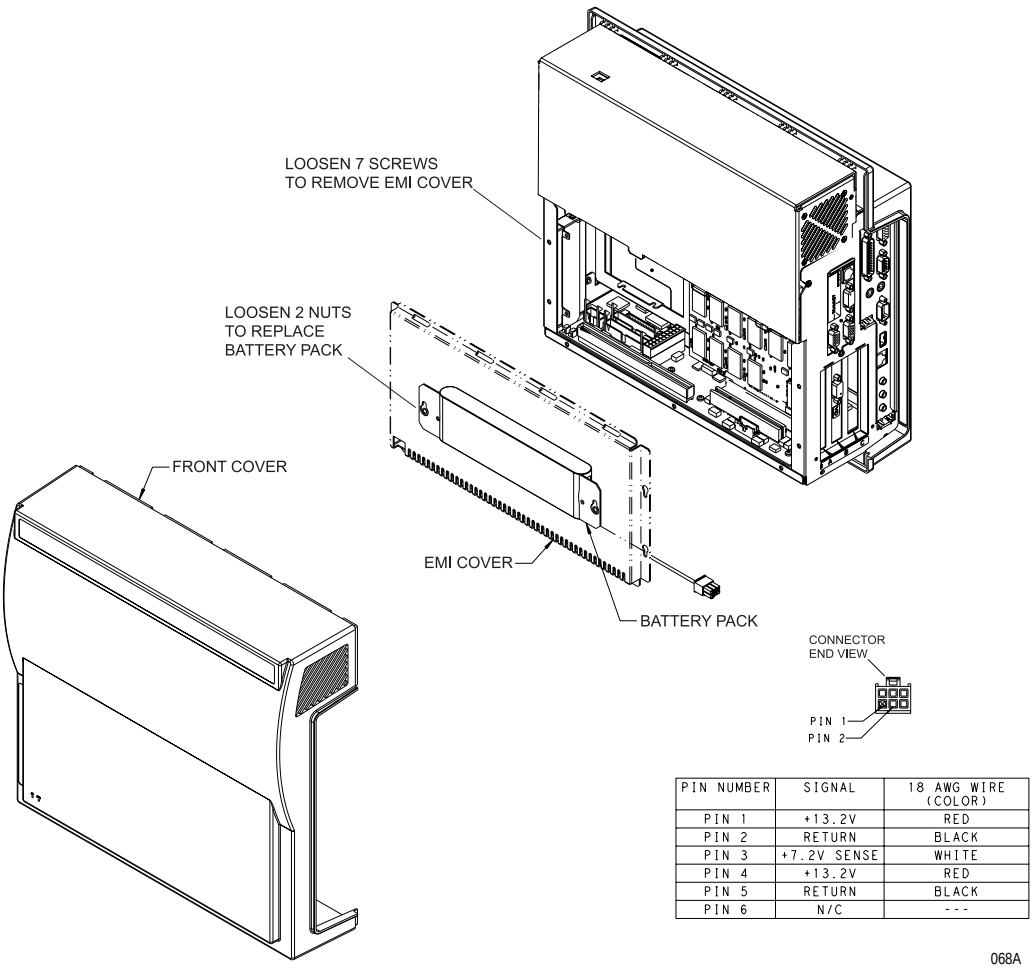

PIN NUMBER	SIGNAL	18 AWG WIRE (COLOR)
PIN 1	+13.2V	RED
PIN 2	RETURN	BLACK
PIN 3	+7.2V SENSE	WHITE
PIN 4	+13.2V	RED
PIN 5	RETURN	BLACK
PIN 6	N/C	---

6. Reconnect the AC power cord and turn the power ON to zero the capacity counter on the Riser Interface board.
7. Power down the Solar 9500.
8. Reconnect the battery cable and reassemble the Solar 9500.

NOTE

The electrical connector of the internal battery is mechanically polarized to insure only proper connection. Do not force improper connection.

9. Perform leakage tests.
10. Reconnect the Solar 9500 to the network and power source.

11. Apply power. The following message appears:.

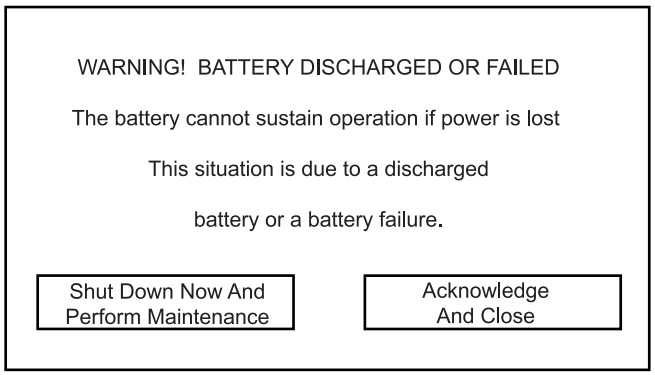

069A

12. Select *Acknowledge And Close* to continue and verify operation.

Battery Recycling

The EPA certified RBRC® Battery Recycling Seal on the nickel-cadmium (Ni-Cd) battery indicates GE Medical Systems *Information Technologies*, Inc. is voluntarily participating in an industry program to collect and recycle these batteries at the end of their useful life, when taken out of service in the United States or Canada. The RBRC® program provides a convenient alternative to placing used Ni-Cd batteries in the trash or the municipal waste stream, which may be illegal in your area. Please call 1-800-8-BATTERY for information on the Ni-Cd battery recycling and disposal bans/restrictions in your area. GE's involvement in this program is part of our commitment to preserving our environment and conserving natural resources.

070A

NLX Motherboard Battery Replacement

The NLX Motherboard has an on-board 3.6 VDC battery as a backup power source for circuits requiring “keep alive” power, such as the real-time clock. Because the normal life of this battery is a little over five years, replace the battery every five years or when the system will not keep date and time after doing a power cycle.

1. Remove the board as described in “Replace the NLX Motherboard” on page 9-6.
2. Replace battery BT1 and reassemble.
   (Battery is in a socket and requires no soldering.)
3. Perform leakage tests.
4. Reconnect the Solar 9500 to the network and power source.
5. Apply power and verify operation.

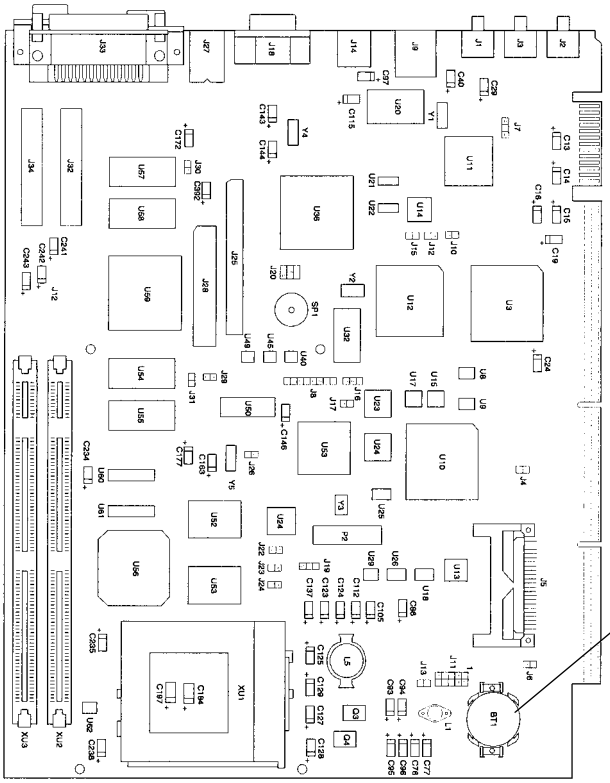

Electrical Safety Tests

General

Electrical safety tests provide a method of determining if potential electrical health hazards to the operator of the device exist.

Recommendations

To help you establish a systematic maintenance routine, GE recommends that you perform all safety tests presented in this chapter

- upon receipt of the device,
- every twelve months thereafter,
- each time the main enclosure is disassembled or a circuit board is removed, tested, repaired, or replaced, and
- record the date and results on the “Maintenance/Repair Log” included at the end of this chapter.

WARNING
Shock hazard. Do not leave unattached power cords connected to the AC mains.

WARNING
Failure to implement a satisfactory maintenance schedule may cause undue equipment failure and possible health hazards. Unless you have an Equipment Maintenance Contract, GE Medical Systems *Information Technologies* does not in any manner assume the responsibility for performing the recommended maintenance procedures. The sole responsibility rests with the individual or institution using the equipment. GE Medical Systems *Information Technologies* service personnel may, at their discretion, follow the procedures provided in this manual as a guide during visits to the equipment site.

Test Conditions

Perform electrical safety tests under normal ambient conditions of temperature, humidity, and pressure.

Test Equipment

Listed below are required tools and test equipment to perform electrical safety tests. Equivalent equipment may be substituted as necessary.

Item	Specification
Leakage Current Tester	Equivalent to the circuits shown
Digital Multimeter (DMM)	AC volts, ohms
Ground Bond Tester	0 – 1 ohm
ECG Test Body	All leads together

Power Outlet Test

Before starting the tests, the wall receptacle from which the device will get electrical power must be checked. This test checks the condition of the wall receptacle to ensure correct results from leakage tests.

For international wall receptacles, refer to the internal standards agencies of that particular country. Use a digital multimeter to ensure the wall receptacle is wired properly.

If other than normal polarity and ground is indicated, corrective action must be taken before proceeding. The results of the following tests will be meaningless unless a properly wired wall receptacle is used.

Ground (Earth) Integrity

Listed below are two methods for checking the ground (earth) integrity, “Ground Continuity Test” and “Impedance of Protective Earth Connection.” These tests determine whether the device's exposed metal and power inlet's earth (ground) connection has a power ground fault condition.

Perform the test method below that is required by your Country/Local governing safety organization.

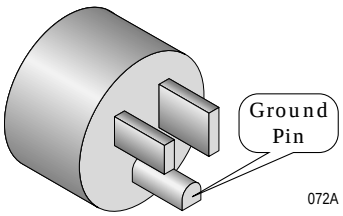

Ground Continuity Test

Completion of this test is checked by the following steps:

1. Disconnect the device under test from the power outlet.
2. Connect the negative(-) lead of the DMM to the protective earth terminal (ground pin in power inlet connector) or the protective earth pin in the Mains plug (ground pin in power cord). Refer to the US 120Vac power cord figure above.
3. Set the DMM to the milliohm (mΩ) range.
4. Connect the positive (+) lead of the DMM to all exposed metal surfaces on the device under test. If the metal surfaces are anodized or painted scrape off a small area in a inconspicuous place for the probe to make contact with the metal.
5. Resistance must read:
   - 0.1 ohm or less without power cord
   - 0.2 ohms or less with power cord

Impedance of Protective Earth Connection

This test unlike a ground continuity test will also stress the ground system by using special ground bond testers.

This test normally is only required as a manufacturing production test to receive safety agency compliance (i.e. IEC601-1).

Some country agency's do require this test after field equipment repairs (i.e. Germany's DIN VDE 0751 standards).

Consult your country/local safety agency if in question.

Compliance is checked by the following steps:

1. A current not less than 10A and not exceeding 25A from a current source with a frequency of 50 or 60 Hz with a no-load voltage not exceeding 6 V is passed for at least 5 s through the protective earth terminal or the protective earth pin in the mains plug and each accessible metal part which could become live in case of failure in basic insulation.
2. The voltage drop between the parts described is measured and the impedance determined from the current and voltage drop. It shall not exceed the values indicated.

For equipment without a power supply cord the impedance between the protective earth terminal and any accessible metal part which is protectively earthed shall not exceed 0.1 ohms

For equipment with a power supply cord the impedance between the protective earth pin in the mains plug and any accessible metal part which is protectively earthed shall not exceed 0.2 ohms.

When taking this measurement, move the unit's power cord around. There should be no fluctuations in resistance.

Ground (Earth) Wire Leakage Current Tests

Perform this test to measure current leakage through the ground (earth) wire of the equipment during normal operation.

1. Configure the leakage tester like the circuit shown below.

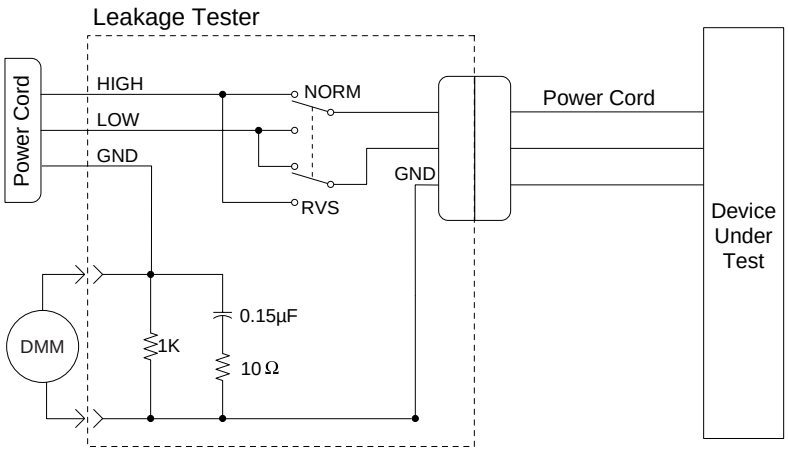

DMM set to measure AC voltage

2. Connect the power cord of the device under test to the power receptacle on the leakage tester.

   NOTE
   The device under test is to be tested at its normal operating voltage.

3. Set the power switch of the device under test to ON.
4. Read the current leakage indicated on DMM.
5. Set the polarity switch on the leakage tester to RVS (reverse).
6. Read the current leakage indicated on DMM.

   NOTE
   If either reading is greater than the appropriate specification below, the device under test fails. Contact GE Medical Systems *Information Technologies* Technical Support.

   - 300 microamperes (0.3 volts on the DMM), when the device under test is powered from 100-120 V/50-60 Hz
   - 300 µA (0.3 volts on the DMM), when the device under test is powered from a centered-tapped 200-240 V/50-60 Hz, single phase circuit
   - 500 µA (0.5 volts on the DMM), when the device under test is powered from a non-center-tapped, 200-240 V/50-60 Hz, single-phase circuit

   NOTE
   Center-tapped and non-center-tapped supply circuits produce different leakage currents and the UL and IEC limits are different.

7. Set the power switch of the device under test to OFF.

NOTE

The DMM plus leakage tester network shown is the circuitry defined by the UL 544 standard for measuring leakage current.

The measuring devices, defined by various standard organizations (IEC, UL, etc.), produce almost identical test measurement results.

Enclosure Leakage Current Test

Perform this test to measure current leakage through exposed conductive surfaces on the device under test during normal operation.

1. Configure the leakage tester like the circuit shown below with GND switch OPEN and polarity switch NORM.

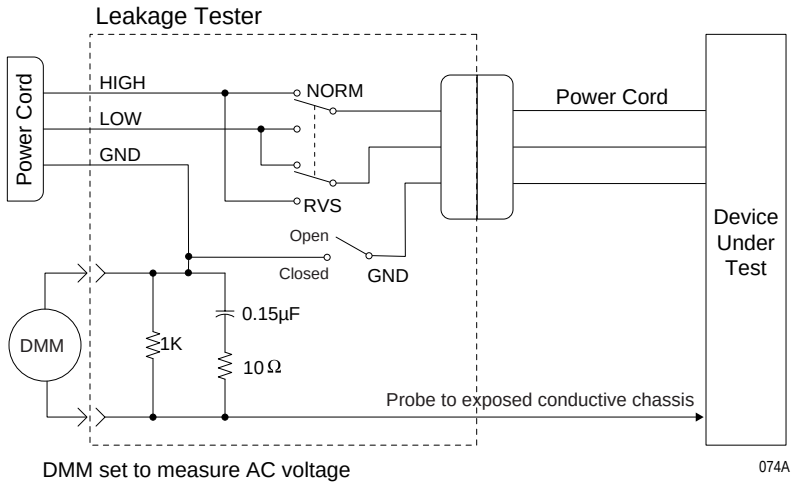

2. Connect probe to an unpainted, non-anodized chassis ground on the unit under test.
3. Set the power switch of the device to ON.
4. Read the current leakage indicated on DMM.

NOTE

Center-tapped and non-center-tapped supply circuits produce different leakage currents and the UL and IEC limits are different.

5. Set the polarity switch to RVS.
6. Read the current leakage indicated on DMM.

NOTE

If either reading is greater than the appropriate specification below, the device under test fails. Contact GE Medical Systems *Information Technologies* Technical Support.

- 300 microamperes (0.3 volts on the DMM), when the device under test is powered from 100-120 V/50-60 Hz
- 300 µA (0.3 volts on the DMM), when the device under test is powered from a centered-tapped 200-240 V/50-60 Hz, single phase circuit
- 500 µA (0.5 volts on the DMM), when the device under test is powered from a non-center-tapped, 200-240 V/50-60 Hz, single-phase circuit

7. Set the GND switch on the leakage tester to CLOSED.
8. Read the current leakage indicated on DMM.
9. Set the polarity switch to RVS.
10. Read the current leakage indicated on DMM.

NOTE

If the reading is greater than the specification below, and the device under test is powered from 100-240 V/50-60 Hz, the device under test fails. Contact GE Medical Systems *Information Technologies* Technical Support.

- 100 microamperes (0.1 volts on the DMM), when the device under test is powered from 100-240 V/50-60 Hz

11. Set the power switch of the device under test to OFF.

Patient (Source) Leakage Current Test

This procedure only applies to Class I (grounded/earthed) equipment, and measures the leakage current from the ECG/RESP connector of the device to ground.

1. Configure the leakage tester like the circuit shown below with GND switch OPEN and polarity switch NORM.

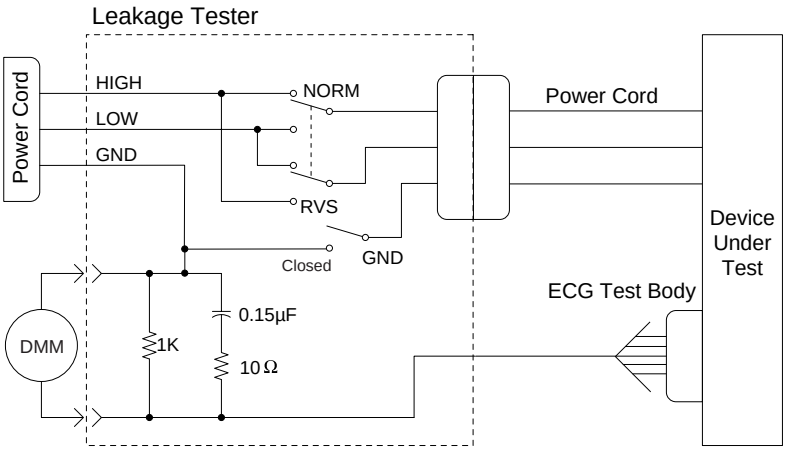

DMM set to measure AC voltage

102A

2. Connect an ECG test body to the ECG/RESP connector of the device under test.
3. Set the power switch of the device to ON.

4. Read the leakage current indicated on the DMM.
5. Change the leakage tester polarity switch to the RVS position.
6. Read the leakage current indicated on the DMM.

NOTE

If either reading is greater than 50 µA (0.05 volts on the DMM), the device fails this test. Contact GE Medical Systems *Information Technologies* Technical Support.

7. Change the GND switch to the Closed position.
8. Read the leakage current indicated on the DMM.
9. Change the leakage current switch to the RVS position.
10. Read the leakage current indicated on the DMM.

NOTE

If either reading is greater than 10 µA (0.01 volts on the DMM), the device fails this test. Contact GE Medical Systems *Information Technologies* Technical Support.

11. Set the power switch of the device to OFF.

NOTE

The AAMI and IEC single fault condition (ground open) is 50 µA, whereas the normal condition (ground closed) is less.

Patient (Sink) Leakage Current Test

(Mains Voltage on the Applied Part)

This procedure only applies to Class I (grounded/earthed) equipment, and measures the leakage current from a mains voltage source into the ECG/RESP connector.

1. Configure the leakage tester like the circuit shown below with GND switch CLOSED and polarity switch NORM.

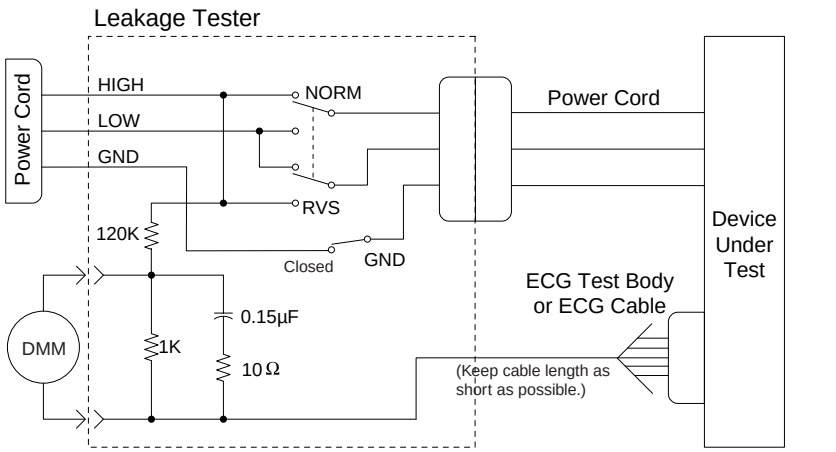

DMM set to measure AC voltage

WARNING
Shock hazard. The following step causes high voltage at the test body. Do not touch the test body.

2. Set power switch on the device to ON.
3. Read leakage current indicated on DMM.
4. Change the leakage tester polarity switch to the RVS position.
5. Read the leakage current indicated on the DMM.

NOTE
If either reading is greater than the appropriate specification below, the device under test fails. Contact GE Medical Systems *Information Technologies* Technical Support.

- 10 µA (0.01 volts on the DMM) at 120 VAC using the test body.
- 20 µA (0.02 volts on the DMM) at 240 VAC using the test body.
- 50 µA (0.05 volts on the DMM) at 120-240 VAC using the ECG cable.

NOTE
The 10 and 20 µA limits are based on internal design standards. The 50 µA limit is common to all standards. AAMI ES-1 standard requires using the patient cable.

6. Set the power switch on the device to OFF.

Test Completion

1. Disconnect the leakage tester from the wall receptacle.
2. Disconnect all test equipment from the device.
3. Disconnect the device power cord plug from the leakage tester power receptacle.

Checkout Procedure

This procedure tests the functions of the monitor, Tram-rac housing and associated communication networks. For the Tram module and input modules checkout procedures, refer to their appropriate service manuals.

Required Tools/Special Equipment

See the chart below for the equipment necessary to perform this checkout procedure. Equivalent equipment may be substituted.

Item	Manufacturer and Part Number/Model
Tram 100-850 module	GE any
BP module	GE any
Multifunctional Micro-simulator	MARQ-1
Oscilloscope	Tektronix 2215
Port Checkout DIDCA	420915-031
AutoPort to M-Port adapter	2001973-001

Initial Power Up

Complete the following steps. Failure to attain any of the listed results indicates a malfunction.

1. With AC switch OFF, check the line voltage configuration of the Solar 9500 and attach the power cord to the appropriate line source.
2. Confirm that all components of the monitoring system are correctly connected as described in chapter 3, Installation.
3. Power ON all devices and the Solar 9500 under test.
4. Verify that the AC LED on the front panel illuminates indicating the power is ON. Also verify that the two fans inside the Solar 9500 are running and that the CPU LED on the front panel illuminates, indicating CPU activity.
5. Place the Tram module into the top two slots of the Tram-rac housing. Verify that the power indicator illuminates.
6. Configure the monitor display with as many waveforms as possible. Refer to the appropriate monitor operator's manual, if necessary.
7. The waveforms should look clean (no noise).

Touch Screen Check

1. Starting with the lower control buttons select *Setups*, then *Configuration/Service*.
2. Select *Calibrate Primary* and follow the on-screen directions. When calibration is complete, verify that the cursor arrow displays where the screen is touched.
3. Repeat the steps using *Calibrate Secondary* if a secondary display is used.

Speaker Check

1. Go to the *Touchscreen Controls* window as in the previous step.
2. Select *Click Volume* to bring up the *Adjust Touchscreen Volume* window.
3. Use the controls in this window to verify that the internal speaker is working.

Tram-rac Housing Check

1. Verify that the power LED is ON at the Tram-rac housing.
2. Disconnect and reconnect the Tram-rac housing communication cable. Verify the recovery of the waveforms.
3. If the Tram-rac housing has additional slots for input modules, insert a BP module. Connect simulator and verify communication to the monitor. Repeat for each slot.
4. If the Tram-rac housing has an optional power supply, check the following on the connector that applies to your equipment.
   - Verify +16.5V is *not* present at pin 5 of the TRAM-NET connector with respect to pin 9.
   - Verify +16.5V is *not* present at pin 5 with respect to chassis ground of the Tram-rac housing.
5. This step does not apply to a Tram-rac 2 housing. Check the analog output connector (yellow) using an oscilloscope. Observe a signal at the appropriate pins found in the following table. The output signal is dependent upon which Tram and input module functions are activated at the monitor. Tram-rac 3 & 4 housings use the front round connector.

Analog Output Signals			
Pins for D-Type Connector	**Pins for Round Connector**	**Signal Source**	**Tram-rac 4A Bezel Number for BP Output**
Pin 1	Pin 8	Signal GND for Tram Waveforms	–
Pin 2	Pin 2	Trace I (ECG II[1])	Tram[1]
Pin3	Pin 6	Tram BP3 or SPO_2 Value	Tram[1]
Pin 4	–	Reserved for Future Use	–
Pin 5	Pin 4	Tram ART 1 or BP1	Tram
Pin 6	Pin 9	Slot 3 Series 7000 Waveform A (Right Side or Module)	Parameter 6
Pin 7	Pin 11	Slot 4 Series 7000 Waveform A (Right Side or Module)	Parameter 8
Pin 8	Pin 8	Signal GND for Series 7000 Waveforms	–
Pin 9	Pin 1	Tram ECG II	Tram[1]
Pin 10	Pin 3	Tram ECG V	Tram[1]
Pin 11	Pin 7	Tram BP4 or RESP	Tram[1]
Pin 12	–	Reserved for Future Use	–
Pin 13	Pin 5	Tram BP2 or SPO_2 Waveform	Tram
Pin 14	Pin 10	Slot 3 Series 7000 Waveform B (Left Side or Module)	Parameter 5
Pin 15	–	Slot 4 Series 7000 Waveform B (Left Side or Module)	Parameter 7

NOTE

[1]The top displayed trace on the monitor is present unless AVR, AVL, or AVF leads are used, then lead II is output.

Tram-net Communication Check

1. Plug the Tram-rac housing cables into each of the three Tram-net connectors (blue).
2. Verify that the waveforms recover on the monitor display each time the cable is reconnected.

Unity Network MC Network Check

1. Disconnect the patient cable from the Tram module and verify alarms at the central station.
2. From the lower control buttons on the screen, select *Patient Data*.
3. From the pop-up window, select *View Other Patient...*
4. From the *Patient View* window, choose the *Select Unit and Bed...* button. Verify that in the "Beds" window you see beds listed other than your own.

NOTE

A Solar 9500 can only be viewed if it has a Bed and Unit name and is also actively acquiring data from a Tram.

5. Select another Bed and verify that the unit under test displays the other Bed's data.
6. Close the Remote View window.

Weblink Access Check (optional feature)

The Unity Network IX network is used for the connection between the Weblink MAS system and the Solar 9500 system. Do the following to check Weblink connection.

1. Select the *Browser...* option under the *Patient Data* menu to verify that the Solar 9500 and Weblink MAS system are connected through a common network.

NOTE

If the *Browser...* option does not display, the Solar 9500 has not been configured for this option.

2. Verify that after about 30 seconds a browser window displays on the main graphics display.

Printer Check (printer optional)

Select *Start Manual Print* from the waveform window and verify waveforms are printed.

For more information on printing see the Solar 9500 Information Monitor operator's manual.

Unity Network ID Check

Refer to the Unity Network ID service manual for checkout procedures.

M-Port Check

If connecting to a PRN 50 with AutoPort, then adapter PN 2001973-001 is required. Plug the adapter end labeled **AUTOPORT** into the AutoPort device.

1. Plug the adapter (PN 2001973-001) end labeled **AUTOPORT** into the Port Checkout DIDCA side labeled **PORT CHECKOUT**.
2. Connect one end of a category 5 cable to the adapter (on the Port Checkout DIDCA) and the other end to one of the M-Ports.
3. Verify that the M-Port status LED illuminates green.
4. Repeat the above steps for all M-Ports.

Completion

This completes the checkout procedure.

- Disconnect all test equipment.
- Return the monitor and Tram-rac housing to service.

PM Form

Due to continuing product innovation and because specifications in this manual are subject to change without notice, a PM form is not included with this manual. For the latest PM form regarding this product, contact GE Medical Systems *Information Technologies* Service.

If repairs/adjustments were made or any parts replaced, describe this in the area provided on the PM form.

Also include comments regarding any unusual environmental conditions that may affect the operation or reliability of the equipment in the area provided on the PM form.

On the following pages a repair log is included for your convenience to record the repair history of this product.

Repair Log

A repair log is included for your convenience to record the repair history of this product.

Unit Serial Number:
Institution Name:

Date	Maintenance/Repair	Technician

Unit Serial Number:
Institution Name:

Date	Maintenance/Repair	Technician

7 Troubleshooting

Fault Isolation

The troubleshooting information presented in this chapter will help you narrow service problems to one of the replaceable assemblies.

Familiarize yourself with the following material in this chapter before attempting to service the monitor.

- Familiarize yourself with the Service Menus.
- Read the General Fault Isolation suggestions.
- Familiarize yourself with the assembly details in chapter 9, Parts Lists and Drawings.

First Things to Ask

If the unit is not working properly, save some time troubleshooting by asking yourself these basic questions.

- Is the power cord connected?
- Is the unit turned ON at the rear of the monitor?
- Are both LEDs on the front of the processor on?
- Are all the communication cables firmly connected?
- Were there any changes in the use, location, or environment of the equipment that could cause the failure?
- Has the unit been modified in any way, either in software or hardware?

Is operator error the cause of the problem? Try to repeat the user's scenario exactly and compare that to the proper operation of the equipment. Check the operator's manual as necessary.

Visual Inspection

A thorough visual inspection of the equipment can save time. Small things—disconnected cables, foreign debris on circuit boards, missing hardware, loose components—can frequently cause symptoms and equipment failures that may appear to be unrelated and difficult to track.

The following steps might seem trivial but it is highly recommended that they be performed to remove these "simple" failures as causes of problems.

- Power down the unit as described in chapter 3, Installation, remove the power cord and disconnect all other cables from the processor.
- Check all fuses. See "Fuse Replacement" on page 7-7.
- Refer to chapter 9, Parts Lists and Drawings, before you perform an internal visual inspection of the components.

WARNING
Shock hazard. High voltages exist in this unit. Use insulated tools. Remove jewelry. Use only one hand when possible.

Take the time to make all the recommended visual checks (refer to the visual inspection chart below) before starting any detailed troubleshooting procedures.

Visual Inspection Chart	
Area	**Look for the following problems:**
I/O Connectors and Interface Cables	■ Fraying or other damage ■ Bent prongs or pins ■ Cracked housing ■ Loose screws in plugs ■ Excessive cable tension or wear ■ Secure mounting hardware
Internal Harnesses and Cables	■ Excessive tension or wear ■ Loose connection ■ Strain reliefs out of place
Circuit Boards	■ Moisture, dust, or debris (top and bottom) ■ Loose or missing components ■ Burn damage or smell of over-heated components ■ Socketed components not firmly seated ■ PCB not seated properly in edge connectors ■ Solder problems: cracks, splashes on board, incomplete feedthrough, prior modifications or repairs
Ground Wires/Wiring	■ Loose wires or ground strap connections ■ Faulty wiring ■ Wires pinched or in vulnerable position
Mounting Hardware	■ Loose or missing screws or other hardware, especially fasteners used as connections to ground planes on the mother board.
Power Source	■ Faulty wiring, especially AC outlet ■ Circuit not dedicated to system (Power source problems can cause static discharge, resetting problems, and noise.)

WARNING
Repair multilayer and surface mount PCB assemblies at your own risk! Improper repair methods can damage the PCB assemblies even further. Only qualified service personnel with the proper laboratory equipment should attempt to repair PCB assemblies.

Main Power and Display Power

CAUTION
Make sure the voltage selector switch (S1) is in the correct position for the applied voltage

Turn the mains power switch of the processing and display to the ON (1) position. During normal operation, the main power switches are left in the ON position.

There are two LEDs in on the front panel of the Solar 9500 CPU, one is marked AC and the other CPU. Use the following table to check on their status:

AC	CPU	Description
Off	Off	No power applied to the Solar 9500 or fuses blown.
Off	On	Running on batteries and will shut down shortly.
On	Off	Hardware problem, Check the power supply.
On	On	Normal operating mode.

AC Power Failure

If the Solar 9500 CPU has an AC power failure, the following message appears:

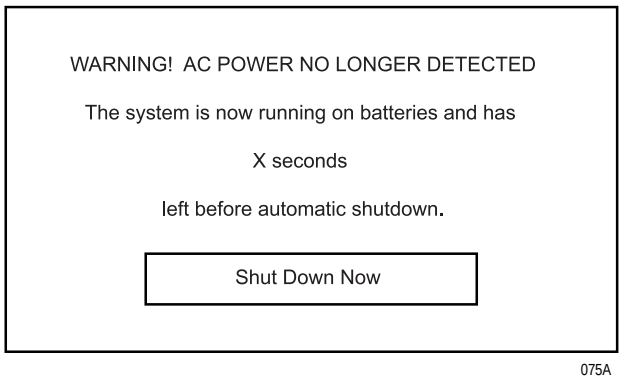

Select *Shut Down Now* or the unit goes into automatic shutdown in 12 seconds. When power is restored the unit goes through start-up and returns to it's normal operating condition.

If there was a power interruption and the unit did not shut down, the following message appears after full power is resumed:

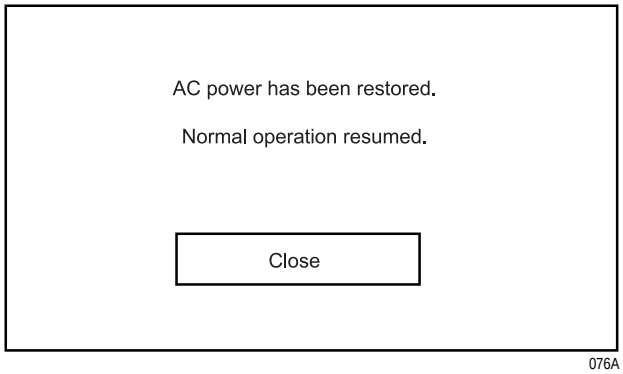

Select *Close* and resume normal operation.

Battery Failure

On power up if the battery pack of the Solar 9500 CPU does not have enough capacity to provide the 12 seconds of back-up power, the following message appears:

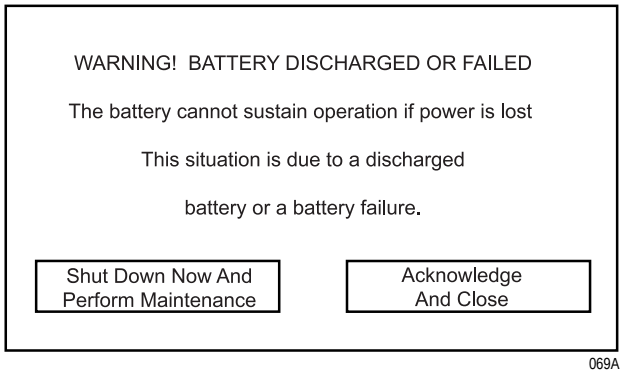

You can

- select *Shut Down Now And Perform Maintenance*, or
- select *Acknowledge And Close* to continue normal operation.

Repeat this test after 24 hours of continuous AC power to the Solar 9500 CPU. If after a power cycle the above message displays again, then replace the battery pack. See chapter 6, Maintenance for information on replacing the battery pack.

If the battery pack becomes completely discharged and the power goes down, the hard drive may become corrupted. In this case after replacing the battery pack, the following message appears on the display at power up:

Repairing the hard disk: /dev/hd2x)
This may take several minutes. Do not power down.

CAUTION
Powering down while the above message is displayed may cause further damage to the hard drive.

High Temperature Failure

The Solar 9500 CPU uses a forced-air cooling system that draws air through the unit. As a result, there can be a buildup of lint and other debris inside the unit. Accumulations of lint or blockage of ventilation holes can lead to thermal failures. If the internal temperature of the unit rises above the normal operating temperature, the following message appears:

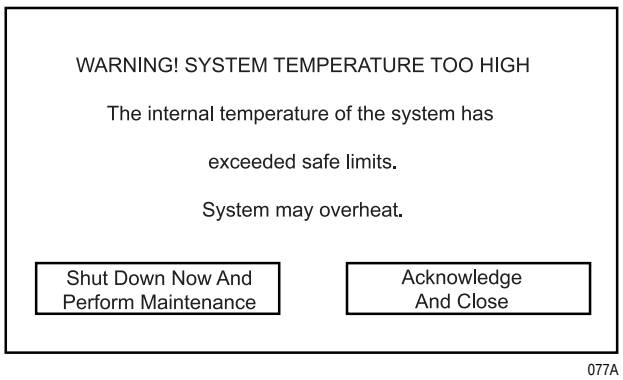

You can

- select *Shut Down Now And Perform Maintenance*, or
- select *Acknowledge And Close* to continue normal operation.

Check that the Solar 9500 CPU's cooling fans are functioning correctly.

Check for any buildup of lint or blockage of the ventilation hole and clean the unit as instructed in chapter 6, Maintenance.

Fuse Replacement

Both sides of the AC mains, line and neutral, are individually fused.

1. Remove power cord from source and back of device.
2. Lay device on its back and remove housing cover as shown.
3. Loosen the two chassis mount screws and swing the power supply chassis down to access interconnecting cables.

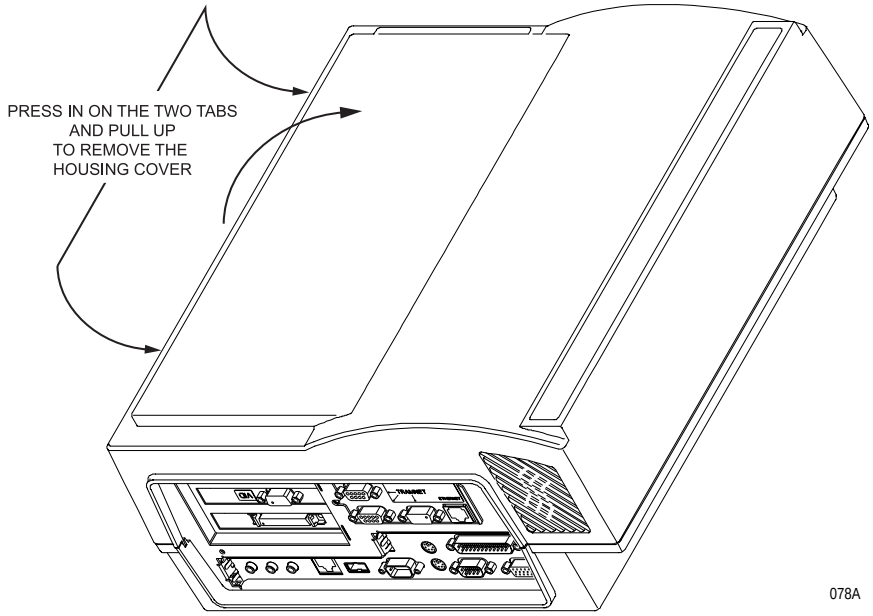

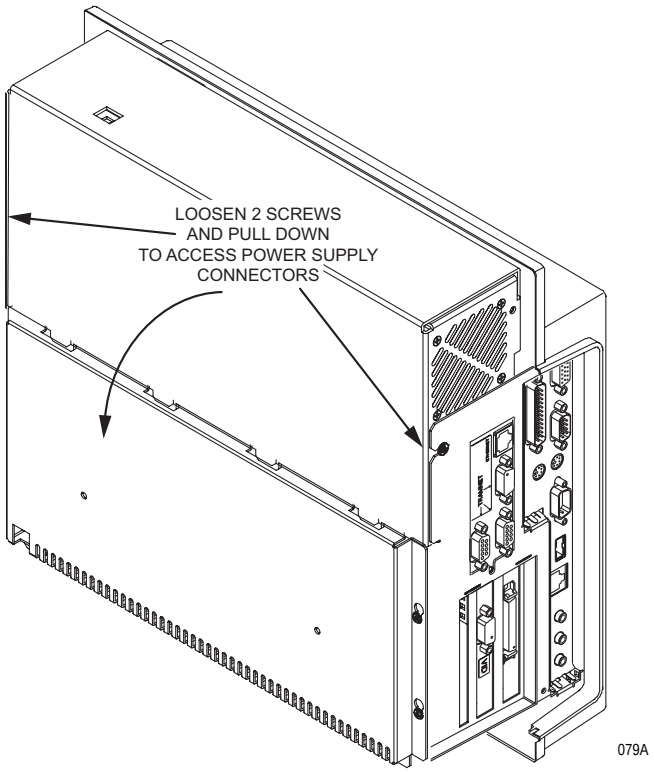

4. Remove two screws from the input assembly.

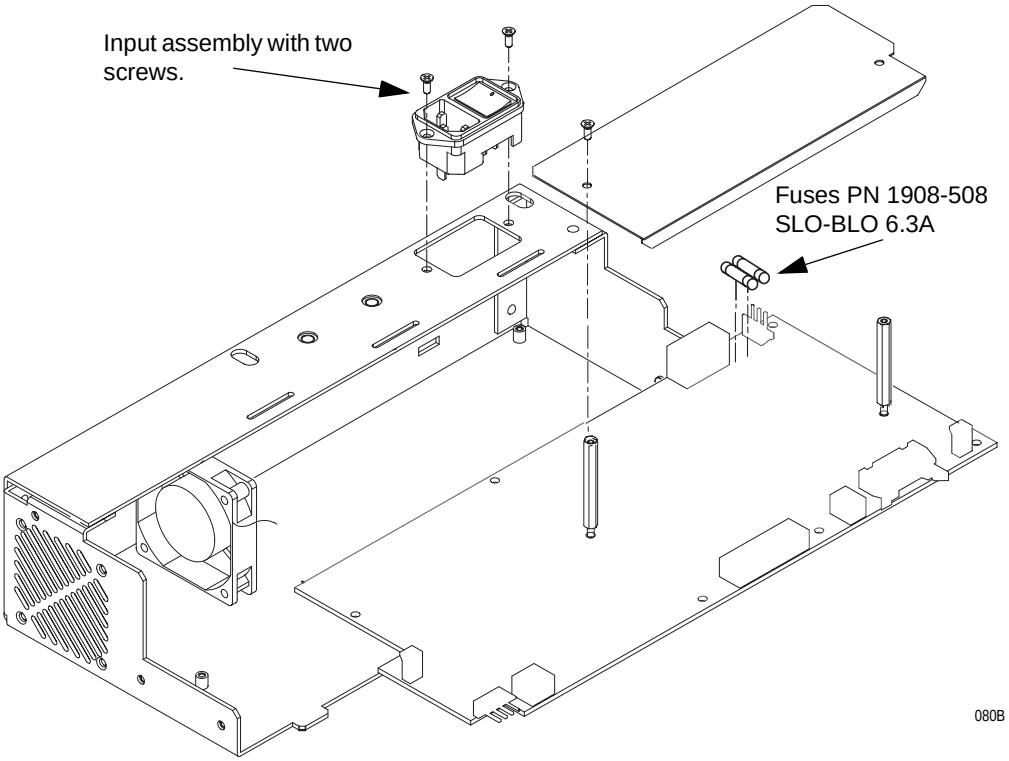

5. Remove the two screws and input assembly.
6. Remove and replace defective fuse(s).
7. Reverse the procedure to reassemble the device.
8. Apply power and check operation.

AC Line Voltage Test

This test verifies that the domestic wall outlet supplying power to the equipment is properly wired. For international wiring tests, refer to the internal standards agencies of that particular country.

120 VAC, 50/60 Hz

Use a digital voltmeter to check the voltages of the 120-volt AC wall outlet (dedicated circuit recommended). If the measurements are significantly out of range, have a qualified electrician repair the outlet. The voltage measurements should be as follows:

1. 120 VAC (± 10 VAC) between the line contact and neutral and between the line contact and ground.
2. Less than 3 VAC between neutral and ground.

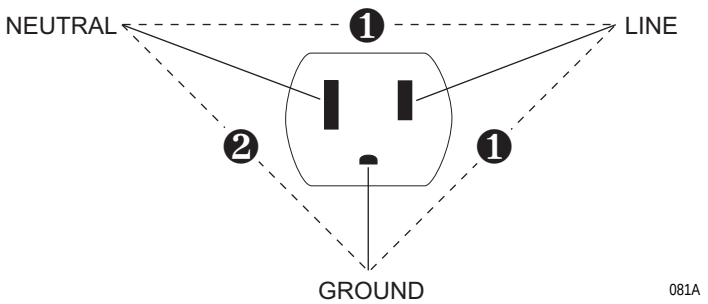

240 VAC, 50/60 Hz

Use a digital voltmeter, set to measure at least 300 VAC, to check the voltages of the NEMA 6-20R, AC wall outlet (dedicated circuit recommended). If the measurements are significantly out of range, have a qualified electrician repair the outlet. The voltage measurements should be as follows:

1. 120 VAC (± 10 VAC) between either “hot” contact and ground.
2. 210 to 230 VAC between the two “hot” contacts.

Troubleshooting Procedure

Service Menu

The Service Menu is for use by qualified field engineers and factory service personnel to configure and service the Solar 9500 Information Monitor.

CAUTION
The Service Menu is intended for use only by qualified personnel. Unnecessary tampering with service mode menu options for experimentation purposes may cause a malfunction of the equipment and is not recommended by the manufacturer.

To access the SERVICE MODE menu, execute the following menu sequence, starting from the MAIN menu:

Setups

Configuration/Service...

Service mode...

At the numeric touchscreen keypad, enter the day and month using leading zeros. (July 4 = 0407)

The following Service menu screen displays.

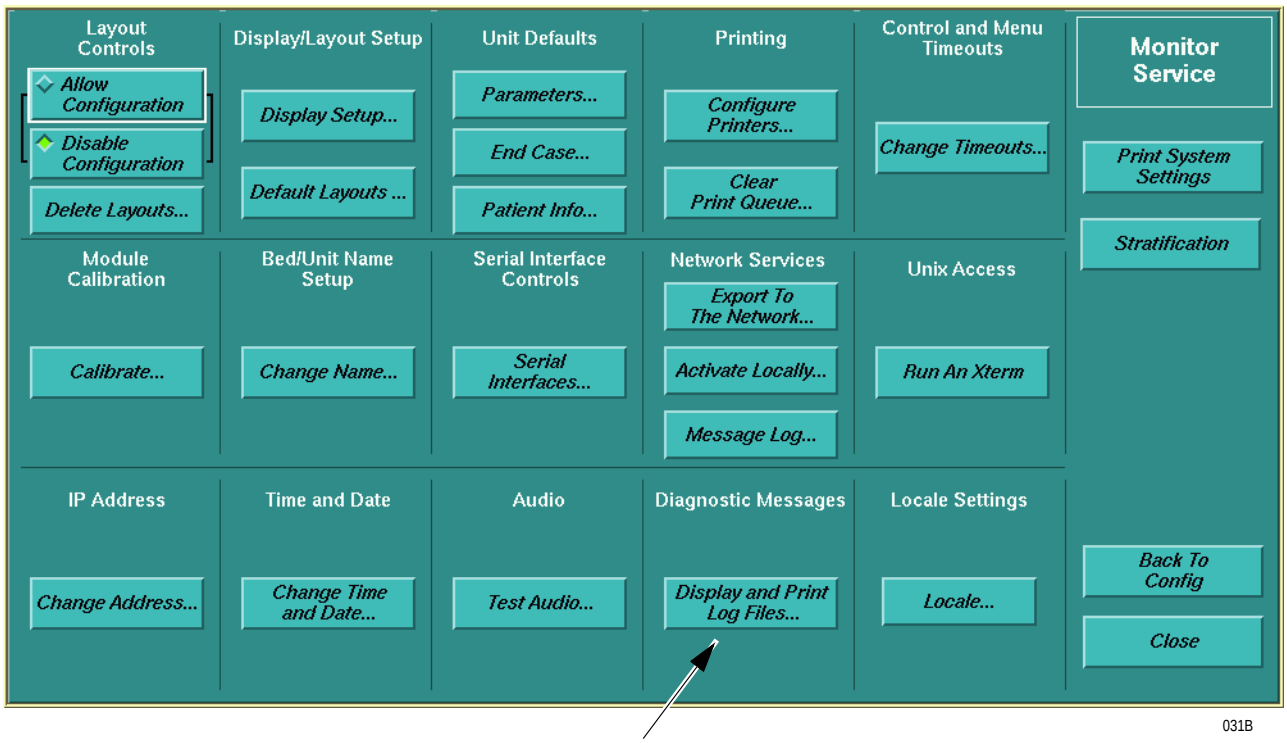

Diagnostic Messages

Select *Display and Print Log Files...* to view a window with system messages for use by GE engineering personnel.

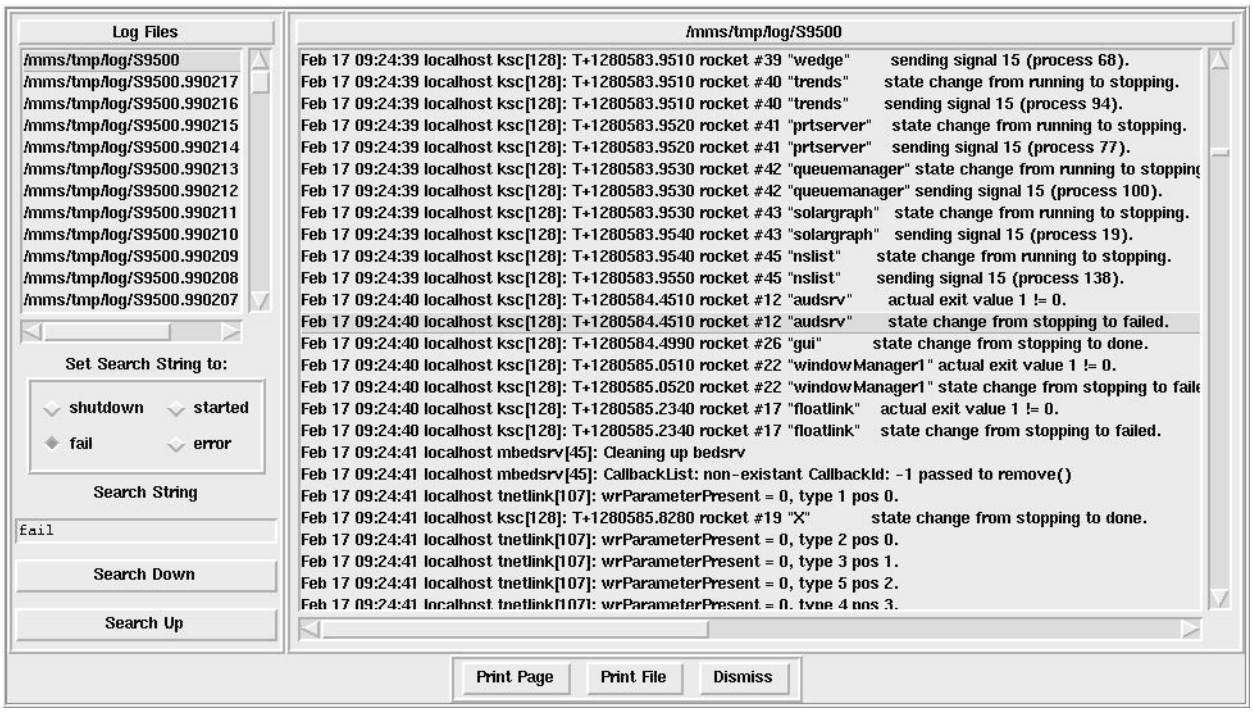

083A

Click on the name of the log file you want to view.

NOTE

An external keyboard and mouse are highly recommended for these operations.

Log Files – Displayed here are the searchable Log Files for this system. Click on a file to display all the messages for that file in the adjoining window and view the Log Files type.

Set Search String to: – Listed here are four preset search words for finding text within a file. Additional searches can be accomplished by entering text into the Search String text block.

Search Down/Search Up – Clicking on either of these buttons will find and highlight a matching file message.

Print Page – Select this button to send the currently displayed Log Files messages to the printer that was set up to receive “System” printouts (see Select Printers from the main menu).

Print File – Select this button to send all of the messages of the displayed Log File to the printer that was set up to receive “System” printouts (see Select Printers from the main menu).

Log File Types

There are six different log file types stored by the Solar 9500.

1. **/mms/tmp/log/9500**: This is the main message log used by the system. It contains the most recent messages sent by the suite of Solar 9500 Monitor applications. This file is the first that should be viewed when trying to diagnose a problem.
2. **/mms/tmp/log/basic**: This file contains messages sent by processes other than the Solar 9500 monitor applications (e.g. network services, the log file compression process, and the battery and voltage monitoring).
3. **/mms/tmp/log/messages**: This file contains all operating system messages (e.g. boot-up time).
4. **/mms/persistent/log/S9500**: This file contains the "Critical Messages" and a history of critical problems and system modifications (e.g. software activation, etc.).
5. **/mms/persistent/log/S9500/TramErrlogFile**: This is the most recently acquired TRAM error log file. It is updated whenever the log viewer application is started and a TRAM module is available to the system.
6. **rc.log.[0-xx]**: These files contain system bootup information and are ordered by date with the most recent listed first.

The first four message types listed may also have a date and time stamped version of the file. These are older versions of the respective message logs that have been compressed to reserve hard disk drive space. The files are ordered by date with the most recent listed first.

Each of the compressed files have a YYMMDD.HHMMSS.gz appended to the end of the log file name.

- The *YYMMDD*. is year, month, date,
- the *HHMMSS*. is hour, minute, second,
- the gz signifies that the file has been compressed.

Log File Timestamps

The timestamps in the log file may differ from the display time because the timestamp reflects system time and the display reflects MC network time. Once an hour the system creates a Response Statistic entry in the S9500 log where the timestamp at the left is the system time and the timestamp at the right is the display time. To determine the real time of a given log file, calculate the difference between these two times.

Diagnosing System Problems with Houston

General

If a Solar 9500 cannot fully boot or has encountered a major system failure from which it cannot recover, it displays the fail-safe service-mode application called “Houston”. Houston provides several system maintenance functions to help with diagnosing system problems. Although it does not provide a complete set of tools, it can display much of the common data needed when investigating major system errors.

NOTE

A keyboard and mouse must be connected to the Solar 9500 in order to use Houston. If a keyboard and mouse are not connected, turn the Solar 9500’s power off and wait for it to shutdown. Plug in a keyboard and mouse, then turn the Solar 9500 on. The keyboard may now be used to operate Houston.

Houston Main Menu

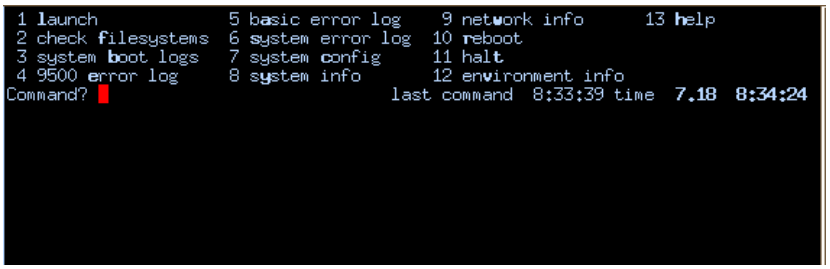

084A

The top area of the Houston display consists of:

- A numbered list of menu items.
- A prompt (*Command?*) where all keyboard input displays.
- A display of the time at which the last command executed.
- A display of the current date (month.day) and time (hh:mm:ss) which updates every 15 seconds.

The rest of the area of the display is devoted to showing the output from executed menu items.

A menu item is executed by typing in either its number, its highlighted letter, or its full name, and then pressing the **Enter** key. As the menu item is being executed, the command prompt is replaced with “---- *working*”. When the item is finished running, its output is displayed. If the output is longer than can be fully displayed on the screen, it is displayed one page at a time.

Pressing the **Enter** key executes the previously run command. However, after a menu item is run, the previously executed command is set to “+” (see “Navigating Multi-page Output” on page 7-21).

Overview of the Menu Items

Prompt		**Action**
1	launch	Attempt to restart the Solar 9500 Monitor Applications.
2	check filesystems	Reboot the Solar 9500 and perform a filesystem check.
3	system boot logs	Display the boot logs.
4	9500 error log	Display the S9500 Monitor Applications error log. (/mms/tmp/log/9500)
5	basic error log	Display the S9500 OS error log. (/mms/tmp/log/basic)
6	system error log	Display the S9500 System Applications error log. (/mms/tmp/log/messages)
7	system config	Display the system registry and display configuration.
8	system info	Display the system's configuration information.
9	network info	Display the system's network configuration and status information.
10	reboot	Reboot the system.
11	halt	Halt the system.
12	environment info	Display the system's operating environment information.
13	help	Display a help screen.

Launch

To launch the Solar 9500 Monitor apps, select option 1. This attempts to start up the Solar 9500 Monitor Applications, and if successful, the monitor becomes operational. If an unexpected error occurs, the Solar 9500 retries launching itself again unless a fourth launch is tried within a fifteen minute time span. If that occurs, Houston displays again.

Check Filesystems

To ensure that the Solar 9500's filesystems are intact, run option 2. This reboots the system and performs a filesystem check on all of the filesystems. After it is done checking its filesystems, it reboots again. If the Solar 9500 does not successfully boot and Houston is again displayed, use the system boot logs command to view the results of the filesystem check.

System Boot Logs

The results of the most recent operating system boots display in most recent order by running option 3. This also includes results of filesystems checks. See "Navigating Multi-page Output" on page 7-21 for information on how to scroll through and search the output of this command.

```
 1 launch             4 9500 error log     7 system config     10 reboot
 2 check filesystems  5 basic error log    8 system info       11 halt
 3 system boot logs   6 system error log   9 network info      12 help
Command?                                last command 12:55:18 time  6.22 12:55:33
Page 1 of 18: line 1 (Use + and - to scroll; /, n, and N to search)
/rc.log.5:

LynxOS Startup:  fa

Date set to  Thu Jun 22 12:29:14 CDT 2000
/dev/hd2c: clean
Checking /dev/hd2c
(all sizes and block numbers in decimal)
(block size is 2048)
(file system is byte-swapped)
(file system creation time is Tue Mar 30 15:22:58 1999)
(file system contains 1022112 blocks and 255520 inodes)
checking used files
checking for orphaned files
making bit map free block list
making free inode list
703496 free blocks 245700 free inodes
Filesystem Ok
Checking /dev/hd2b
```

085A

9500 Error Log

All of the messages logged by the Solar 9500 Monitor Applications are sent to the S9500 log file. Running option 4 displays the contents of this file. See "Navigating Multi-page Output" on page 7-21 for information on how to scroll through and search the output of this command.

```
 1 launch             4 9500 error log     7 system config     10 reboot
 2 check filesystems  5 basic error log    8 system info       11 halt
 3 system boot logs   6 system error log   9 network info      12 help
Command?                                last command 12:57:19 time  6.22 12:58:44
Page 335 of 425: line 6347 (Use + and - to scroll; /, n, and N to search)
Jun 22 12:29:31 localhost cleanup: Freeing shared memory...
Jun 22 12:30:47 localhost root: ++++++++++++++++++++++++++++++
Jun 22 12:30:47 localhost root: Starting S9500 on /mms/S9500...
Jun 22 12:30:47 localhost /mms/S9500/bin/identifyGraphicsCards[124]: interface
= 0x00d61013  subsystem = 0x80001013  class/rev = 0x03000003
Jun 22 12:30:47 localhost /mms/S9500/bin/identifyGraphicsCards[124]: interface
= 0x908010b5  subsystem = 0x13141487  class/rev = 0x03800003
Jun 22 12:30:47 localhost /mms/S9500/bin/identifyGraphicsCards[124]: interface
= 0x908010b5  subsystem = 0x13141487  class/rev = 0x03800003
Jun 22 12:30:47 localhost /mms/S9500/bin/identifyGraphicsCards[124]: Number of
PCI graphics cards installed = 3.
Jun 22 12:30:47 localhost /mms/S9500/bin/identifyGraphicsCards[124]: Number of
MMS graphics cards installed = 2.
Jun 22 12:30:47 localhost /mms/S9500/bin/identifyGraphicsCards[124]: Number of
Cirrus graphics cards installed = 1.
Jun 22 12:30:48 localhost solar: ALL DONE STARTING APPS FOR IN /mms/S9500
Jun 22 12:30:51 localhost ksc[141]: T+0.0020 @@@@@@@@@@@@@@@@ ksc started at 96
1695051.390813.
Jun 22 12:30:51 localhost ksc[141]: T+0.2350 @@@@@@@@++++++++ salvo   #6 "SOLAR
```

086A

Basic Error Log

Messages logged by the S9500 OS's runtime processes are sent to the basic log file. Running option 5 displays the contents of this file. See "Navigating Multi-page Output" on page 7-21 for information on how to scroll through and search the output of this command.

```
 1 launch             4 9500 error log     7 system config     10 reboot
 2 check filesystems  5 basic error log    8 system info       11 halt
 3 system boot logs   6 system error log   9 network info      12 help
Command?                                  last command 13:00:31 time  6.22 13:01:35
Page 76 of 439: line 1426 (Use + and - to scroll; /, n, and N to search)
 phys memory exists
Jun 11 09:23:01 localhost startup.ns: Starting to launch network services...
Jun 11 09:23:01 localhost startup.ns: Cleaning up network services scratch dire
ctories...
Jun 11 09:23:01 localhost startup.ns: Cleaning up orphaned distribution files..
.
Jun 11 09:23:01 localhost startup.ns: Launching network services daemons...
Jun 11 09:23:01 localhost startup.ns: Completed launching network services
Jun 11 09:23:03 localhost prodInstd: Software product installation daemon monit
oring /mms/tmp/ns/incoming/apprelease...
Jun 11 09:23:04 localhost nsdaemon[94]: nsdaemon running
Jun 11 09:23:04 localhost nsdaemon[94]: Could not attach to Rwhat db with shmid
 -1: Argument invalid/improper
Jun 11 09:30:01 localhost arnold: /mms/tmp/log/basic threshold:1048576 ret_thre
shold:2097152 hour:-1
Jun 11 09:30:01 localhost arnold: Not retiring /mms/tmp/log/basic - size:75104
does not exceed threshold:1048576
Jun 11 09:30:01 localhost arnold: done
Jun 11 09:35:01 localhost arnold: /mms/tmp/log/messages threshold:1048576 ret_t
```

087A

System Error Log

Messages logged by the S9500 System Applications and the operating system are sent to the system log file. Running option 6 displays the contents of this file. See "Navigating Multi-page Output" on page 7-21 for information on how to scroll through and search the output of this command.

```
 1 launch             4 9500 error log     7 system config     10 reboot
 2 check filesystems  5 basic error log    8 system info       11 halt
 3 system boot logs   6 system error log   9 network info      12 help
Command?                                  last command 13:02:33 time  6.22 13:02:33
Page 1 of 24: line 1 (Use + and - to scroll; /, n, and N to search)
Mar 30 16:37:17 oasis LynxOS: LynxOS 386/486/Pentium PC-AT Version 2.5.1
Mar 30 16:37:18 oasis LynxOS: Copyright 1987-1997 Lynx Real-Time Systems Inc.
Mar 30 16:37:18 oasis LynxOS: All rights reserved.
Mar 30 16:37:18 oasis LynxOS:
Mar 30 16:37:18 oasis LynxOS: LynxOS (x86) created Fri Jan 15 10:46:57 PST 1999
Mar 30 16:37:18 oasis LynxOS: Or'ing preboot and boot block flags
Mar 30 16:37:18 oasis LynxOS: reboot_status: 808
Mar 30 16:47:50 oasis LynxOS: LynxOS 386/486/Pentium PC-AT Version 2.5.1
Mar 30 16:47:50 oasis LynxOS: Copyright 1987-1997 Lynx Real-Time Systems Inc.
Mar 30 16:47:50 oasis LynxOS: All rights reserved.
Mar 30 16:47:50 oasis LynxOS:
Mar 30 16:47:50 oasis LynxOS: LynxOS (x86) created Fri Jan 15 10:46:57 PST 1999
Mar 30 16:47:50 oasis LynxOS: Or'ing preboot and boot block flags
Mar 30 16:47:50 oasis LynxOS: reboot_status: 808
Mar 30 16:49:26 s9500-012480 LynxOS: LynxOS 386/486/Pentium PC-AT Version 2.5.1
Mar 30 16:49:26 s9500-012480 LynxOS: Copyright 1987-1997 Lynx Real-Time Systems
 Inc.
Mar 30 16:49:26 s9500-012480 LynxOS: All rights reserved.
Mar 30 16:49:26 s9500-012480 LynxOS:
```

088A

System Config

Running option 7 displays the contents of the display setup configuration file, the system registry file, the application registry file, and the patient registry file. See "Navigating Multi-page Output" on page 7-21 for information on how to scroll through and search the output of this command.

```
 1 launch             4 9500 error log     7 system config     10 reboot
 2 check filesystems  5 basic error log    8 system info       11 halt
 3 system boot logs   6 system error log   9 network info      12 help
Command?                                 last command 13:03:29 time  6.22 13:03:56
Page 1 of 4: line 1 (Use + and - to scroll; /, n, and N to search)
Display.ksc Config File:
setenv XF86CONFIG "$SOLAR_CONF/conf/XMMSConfigCMM";
setenv MMSFIRSTSCREEN "0";
setenv WIDELINES "6";
setenv twelves1DISPLAY "unix:0.1";
setenv twelves1ACTIVE "true";
setenv alarmmgrDISPLAY "unix:0.0";
setenv alarmmgrACTIVE "true";
setenv alarmsetupDISPLAY "unix:0.0";
setenv alarmsetupACTIVE "true";
setenv trendsDISPLAY "unix:0.0";
setenv trendsACTIVE "true";
setenv stappDISPLAY "unix:0.0";
setenv stappACTIVE "true";
setenv coappDISPLAY "unix:0.0";
setenv coappACTIVE "true";
setenv wedgeDISPLAY "unix:0.0";
setenv wedgeACTIVE "true";
setenv gui2DISPLAY "unix:0.2";
```

089A

System Info

Running option 8 displays the following information:

- software revision information,
- the results of a software compatibility check,
- the Solar 9500's hostname,
- the Solar 9500's Unity Network MC network interface's ethernet address,
- the Solar 9500's filesystem usage statistics,
- detailed harddrive partition information for each of the Solar 9500's filesystems,
- a summary of the currently used memory on the Solar 9500, and
- a detailed list of the currently running processes on the Solar 9500.

See "Navigating Multi-page Output" on page 7-21 for information on how to scroll through and search the output of this command.

```
 1 launch             4 9500 error log     7 system config     10 reboot
 2 check filesystems  5 basic error log    8 system info       11 halt
 3 system boot logs   6 system error log   9 network info      12 help
Command?                                last command 13:04:57 time  6.22 13:05:46
Page 1 of 11: line 1 (Use + and - to scroll; /, n, and N to search)
Solar 9500 System Revision Information:
S9500 Monitor Apps: 421848-001 Ver 1A X27 19May99 14:23
S9500 System Apps: 421850-001 Ver 1A X9 05May99 15:07
S9500 OS: 421851-001 Ver 1A X17 19May99 16:06

Software Compatibility:
The active set of software is compatible.

Hostname:
oasis

Ethernet Address:
00:00:a1:01:29:c5

Disk Usage Information:
Filesystem    BlkSize  Blocks    Used    Free    %
/dev/hd2b        2048  270144  111842  158302  41%
/dev/hd2c        2048 1022112  318682  703430  31%
```

090A

Network Info

Running option 9 displays the following network-related information:

- the contents of the startup file that initializes the network interfaces,
- the active configuration of each of the network interfaces,
- the contents of the /etc/hosts file,
- the contents of the /etc/resolv.conf file,
- statistics on the network interfaces,
- the Solar 9500's current routing table,
- a detailed list of the currently active connections on the network, and
- statistics on the network-managed memory.

See "Navigating Multi-page Output" on page 7-21 for information on how to scroll through and search the output of this command.

```
 1 launch             4 9500 error log     7 system config     10 reboot
 2 check filesystems  5 basic error log    8 system info       11 halt
 3 system boot logs   6 system error log   9 network info      12 help
Command?                                last command 13:06:44 time  6.22 13:07:20
Page 1 of 8: line 1 (Use + and - to scroll; /, n, and N to search)
/net/rc.nms File:
/bin/ifconfig strmux0 126.186.109.41 netmask 255.0.0.0
/bin/ifconfig pro0 151.186.109.41 netmask 255.255.0.0

Active Configuration for strmux0:
strmux0: flags=863<UP,BROADCAST,NOTRAILERS,RUNNING,SIMPLEX>
        inet 126.186.109.41 netmask 0xff000000 broadcast 126.255.255.255

Active Configuration for pro0:
pro0: flags=8843<UP,BROADCAST,RUNNING,SIMPLEX,MULTICAST>
        inet 151.186.109.41 netmask 0xffff0000 broadcast 151.186.255.255

/etc/hosts File:
127.1   localhost mailhost loghost
126.186.109.41  oasis

/etc/resolv.conf File:
  File does not exist (hostname lookups not performed)
```

091A

Reboot

To reboot the system, run option 10.

Halt

To halt the system, run option 11.

Environment Info

Running option 12 displays the system's operating voltages and temperatures. See "Navigating Multi-page Output" on page 7-21 for information on how to scroll through and search the output of this command.

```
 1 launch             5 basic error log    9 network info      13 help
 2 check filesystems  6 system error log  10 reboot
 3 system boot logs   7 system config     11 halt
 4 9500 error log     8 system info       12 environment info
Command? 12                          last command 11:30:28 time  7.21 11:30:43
      Monitored         Current          High            Low          Alarm
        Input            Value           Limit          Limit         Class
==========================================================================
 0      2.5V          0.00 (0x00)     4.08 (0xff)     0.00 (0x00)      POWER
 1    VPCORE          2.78 (0xae)     3.07 (0xc0)     2.56 (0xa0)      POWER
 2      3.3V          3.39 (0xd4)     3.58 (0xe0)     3.07 (0xc0)      POWER
 3        5V          4.95 (0xb8)     5.38 (0xc8)     4.73 (0xb0)      POWER
 4       12V         12.08 (0xcc)    12.55 (0xd4)    11.37 (0xc0)      POWER
 5      -12V        -12.01 (0xbf)   -12.58 (0xc8)   -11.32 (0xb4)      POWER
 6       -5V         -5.03 (0xb0)    -5.32 (0xba)    -4.80 (0xa8)      POWER
 7    MBTemp  C      43.00 (0x2b)    62.00 (0x3e)    58.00 (0x3a)      TEMP
 8    BatCTap         8.26 (0xda)     8.94 (0xec)     6.06 (0xa0)      BATTERY
 9    BatV           15.07 (0xb8)    15.72 (0xc0)    13.10 (0xa0)      BATTERY
10    16.75V         16.79 (0xcd)    17.69 (0xd8)    16.05 (0xc4)      POWER
11    PwrSupTempC    38.40 (0x18)    64.00 (0x28)    57.60 (0x24)      TEMP
12    BatQ mAHrs    540.00 (0xb4)   540.00 (0xb4)    15.00 (0x05)      BATTERY
13    *Unused*        0.00 (0xff)     0.00 (0xff)     0.00 (0x00)      UNKNOWN
14    *Unused*        0.00 (0xff)     0.00 (0xff)     0.00 (0x00)      UNKNOWN
15    RsrTemp C      32.00 (0x20)    50.00 (0x32)    46.00 (0x2e)      TEMP
```

092A

NOTE

The monitored 2.5V input always displays 0.00 as the current value.

Help

To display online help on how to use Houston, run option 13.

Navigating Multi-page Output

When the output displays on multiple pages, the line below the command prompt shows the following information:

- The current page number.
- The total number of pages of output.
- The line number of the current page.
- A description of the basic output navigation options.

Each navigation option runs by entering the command with the keyboard and pressing **Enter**, just like executing the menu items. When a menu item's output displays, all menu items are still available. When another menu item is executed, the currently displayed output is replaced with the output of the most recently run menu item.

Entering in an invalid menu item or output navigation option causes Houston to display all of the possible commands that can be entered, including the multi-page output navigation options. After entering an invalid command, you must rerun the previous menu item in order to navigate through its output.

```
 1 launch            4 9500 error log     7 system config     10 reboot
 2 check filesystems 5 basic error log    8 system info       11 halt
 3 system boot logs  6 system error log   9 network info      12 help
Command? [ ]                          last command 14:01:25 time  6.22 14:02:41

Request "?" is invalid.
The current menu is:
 1 launch            4 9500 error log     7 system config     10 reboot
 2 check filesystems 5 basic error log    8 system info       11 halt
 3 system boot logs  6 system error log   9 network info      12 help

Other commands include: menu, print, set and show.
To page through a long display, use these commands:
  +        : page forwards
  -        : page backwards
  /regexpr : search using 'regexpr' as the regular expression
  n        : search again forwards
  N        : search again backwards

Simply pressing <Enter> without a command will execute the previously executed
command.
```

093A

The navigation commands include:

+	page forwards
-	page backwards
/	search using a regular expression
n	search again forwards
N	search again backwards

The search capability can be a very useful tool for looking through log files that are hundreds of pages long. If you are unfamiliar with regular expressions, you can still use the "/" command to perform searches. To perform a search, press the forward slash key, type in the string for which you want to search, and then press the **Enter** key. Be sure not to put a space between the forward slash and the text string unless you want the space to be part of the search string.

Characters that are interpreted as special regular expression commands include:

[]()*.^$|+-

If you want to include one of these characters in your search string, prefix it with a backslash (\). For example, to search for "exit.", enter the command "/exit\." and press the **Enter** key. If no occurrences of the search string can be found in the output, the current page of the output is still displayed. Occurrences of a search string in the output display page by page.

Press the "n" key and then the **Enter** key to display the next page containing occurrences of the search string. Use "N" to display the nearest previous page containing an occurrence. If no further pages exist with the occurrences of the search string, the search wraps around to the beginning or end of the output.

Remember that pressing the **Enter** key without entering an option executes the previously executed command. Therefore, when scrolling through occurrences of a search string, press "n" or "N" and **Enter** the first time, and from then on just press **Enter**. If you want to look at the very end of a long log file after you first have it displayed, use "-" to page backwards (thus causing the very last page of output to display), and then press **Enter** by itself to continue displaying pages in reverse order.

8 Theory of Operation

Overview

The Solar 9500 has three main components: the processing unit, displays (with touchscreens), and acquisition devices. The processing unit receives digital encoded information from the acquisition devices. Smart acquisition devices (e.g. the TRAM, SAM, etc...) send post-processed waveform and parameter data to the CPU. While non-intelligent devices (e.g. BP and Temp modules) send (via the Tram-Rac) filtered and digitized, but non-processed, data to the processing unit. The processing unit further processes the waveform and parameter data, reformats for the data, and then directs it for drawing on one or more displays or to one or more printers. The data is also processed for alarm control, trending, and sending to other network devices.

Processing Unit Operation

The Solar 9500 Processing Unit is an Intel Architecture platform. It is based on a main processor board (or Motherboard), a Riser/Interface board, a Riser I/O board, a power supply sub-assembly, and a hard drive. Optional graphics boards are installed into the PCI bus sockets. The Riser/Interface board is found at the bottom of the chassis. All boards plug into the riser board directly or through a ribbon cable except for the main-memory boards which plug into the Motherboard.

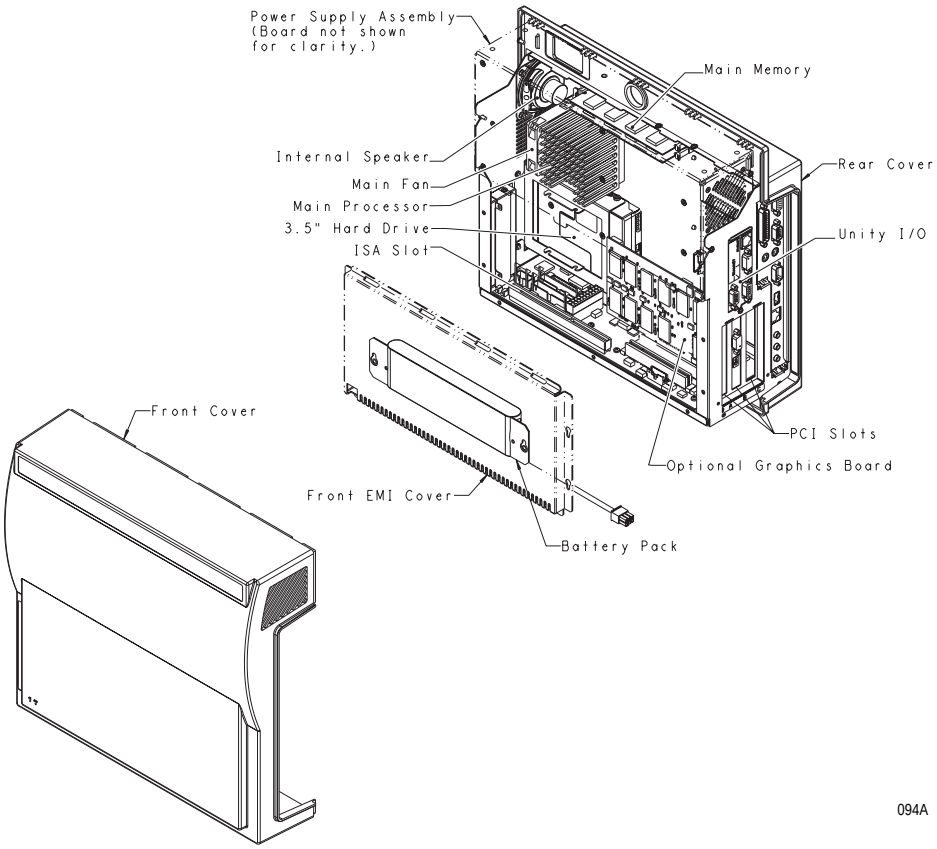

Subassemblies

Power Supply Assembly

The Solar 9500 power supply receives input line voltage from the AC mains and produces six output sources: +16.75, +12, -12, +5, -5 and +3.3 to satisfy the Solar 9500 system requirements. The supply has a separate battery input (13.2V) which is used for an orderly shutdown during a power interruption. The +16.75, -12, and -5 volt outputs are not battery backed since they are not required during shutdown. Several analog outputs and digital input/output signals are provided for the rest of the system for proper operation and monitoring.

This power supply is forced air cooled. In addition the power supply sub-chassis is used as a heat sink for convection cooling.

The Solar 9500 power supply consists of a mains (AC line) PWM converter which creates a bulk output voltage from which the other outputs are developed. The mains bulk output is diode “or’d” with the battery input so that the necessary outputs will remain active when the AC mains source is removed.

16.75 Volt AC Mains Converter

The 16.75 volt AC mains converter is a two transistor forward converter which takes the AC line input and creates the bulk 16.75 volt output.

+5V DC-DC Converter Circuit

U12 is a high power synchronous current mode switching regulator. The circuit incorporates a voltage booster so an N-Channel Mosfet can be used for the high side switch. Under voltage lockout keeps the converter from switching until the voltage at U12-17 reaches approximately 9.35V and shutdowns when the voltage drops below 9.0V. The switching frequency is determined by the values of R120 and C124.

Soft start timing is determined by the value of C18. C5, C6, C7 and L2 provide the bulk filtering for the input.

3.3 Volt Linear Regulator

U16 and associated circuitry form a 3.3 volt linear regulator. U16 is a low dropout, adjustable, three ampere regulator. The +5V input is filtered by C134. The output is set by the values of R54, R132, and R133 and filtered by C31 and C33. CR26 is used to clamp the output to the +5V rail.

+12 Volt Linear Regulator

U17 and associated circuitry form a +12 volt linear regulator. U17 is the same regulator that is used in the 3.3 volt circuit. The output voltage is determined by the values of R138 and R139 and filtered by C54. The output is clamped by zener transient suppressor CR2.

-12/-5 Volt Regulators

U6 is a fixed voltage output negative regulator. The input is from an auxiliary winding of the main switching transformer T2. R107 and R106 are required to provide a minimum load for regulation. C4 filters the output voltage and zener transient suppressor CR1 clamps the output voltage.

U1 is a -5 volt low current linear regulator. C103 provides filtering for the output and transients suppressor CR5 protects the output from overvoltage transients.

External 16.75V Protect Circuit

Since the 16.75 volt rail is the source for all of the other voltages it is necessary that the external +16.75 volt output be protected against short circuits or overloads. U8 and associated circuitry form a auto-reset electronic circuit breaker. In the event of an overload the breaker will remain tripped for a period of time determined by the value of C112 and C114. The output of U8 at pin 6 drives an N-channel mosfet U9 which is the pass element for the circuit. R110, C2, and R111 are used to control the turn-on time of U9.

R110 and R111 are bypassed by CR7 so U9 can be turned off rapidly when a overload occurs. The feedback sense voltage is developed across sense resistor R8 and filtered by R112 and C8. The additional filtering is required to prevent nuisance tripping due to transients. L1, C3 and C113 are used to filter the input to the circuit. Transient suppressor CR9 protects the output from over voltage.

Battery Control/Charging Circuit

Comparator U7 and associated circuitry control the connection of the battery to the main rail. Q3 and Q4 both have to be on in order for the battery to be connected. BATCON* is a signal that is controlled by the main processor board. When BATCON* goes low Q2 turns off which allows Q4 to turn on. U7 monitors the battery voltage. If the voltage is high enough the output at U7-1 will be high and Q3 will be turned on.

When both Q3 and Q4 are on, the gate of P-channel mosfet Q1 is near ground turning it on. This connects the battery to the main rail via or'ing diode CR3.

The battery is continuously trickle charged from the main 16.75 volt rail via current limiting resistors R6 and R7. CR6 is used to prevent the battery from driving the 16.75 volt rail when it drops below the battery voltage.

AC Mains Input Power Requirements

All components used in the supply mains input circuitry are UL and IEC certified and meet all safety and constructional requirements of UL2601-1 and IEC60601-1 as part of patient care Class 1 medical electrical equipment.

AC Mains Power Entry Assembly

An AC mains power entry assembly includes a male input connector with an AC power switch. The AC power switch breaks both line and neutral.

AC Mains Power Fusing

Both sides of the AC mains, line and neutral, are individually fused. Fuses are located on the circuit board and are type T rated at 6.3 amperes

AC Mains Safety Ground

A grounded connection is provided from the grounding pin on the AC mains power entry assembly to a stud at the chassis.

Video PCB

This Solar 9500 Video Circuit Board Assembly provides an analog RGB video signal that is input to a video monitor to provide the display for the Solar 9500 Information Monitor. The circuit board interfaces to the Solar 9500 Processor via the PCI-Bus.

The video display format is 1024 horizontal x 768 vertical x 16 bit pixels at 70 Hertz noninterlaced. The RAMDAC palette provides 65,536 colors selected from a possible 16 million colors.

The circuit board supports multiple dynamic (panning and scrolling) windows and contains enough video memory for 2 and 2/3 screens of data on the dynamic video plane and enough video memory for one screen of data on the static video plane. The dynamic and static video planes may be overlayed or underlayed and use transparency to provide the effect of scrolling or panning data on the display along with stationary text or data. Window attributes, including scrolling and/or panning rates and static plane overlay or underlay, are selectable on a window by window basis. A 64 x 64 pixel three color cursor is available on the display.

A Fujitsu SparcLite MB86831 32-bit processor is used on the circuit board and a minimum of 512 KBytes of memory are available for program and windowing parameter memory. The 512 KBytes of program and windowing parameter memory physically reside in the unused portion of the static plane VRAM (Video Random Access Memory).

A block diagram of the Solar 9500 video circuit board is shown in the following figure:

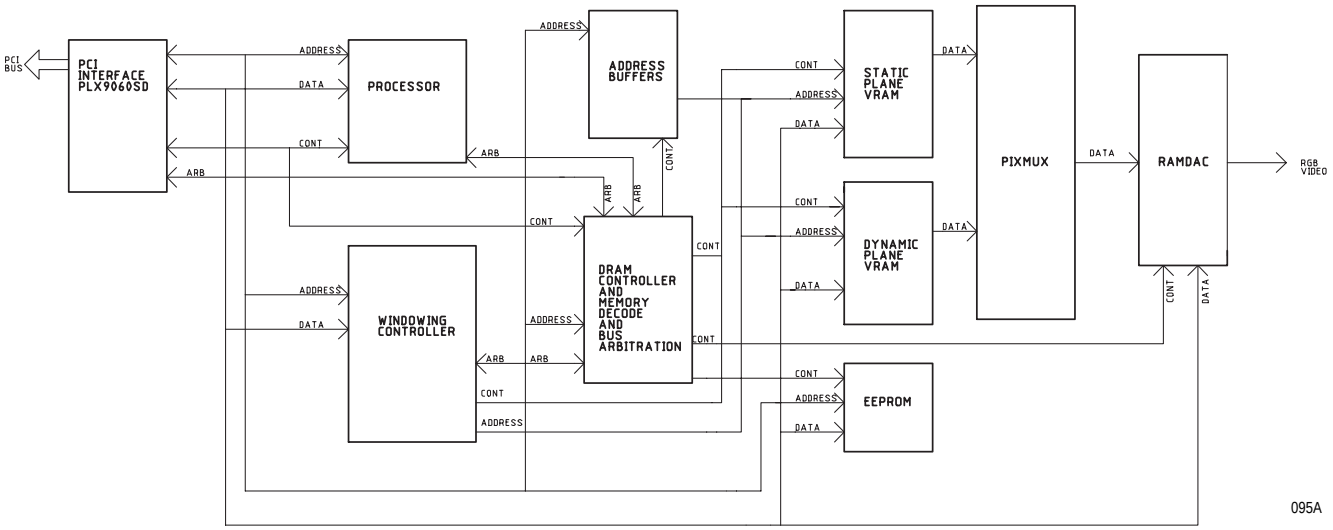

Windowing hardware is used to select the pixel information sent to the RAMDAC. The windowing hardware consists of the arbitration logic, the memory controller logic and the pixel multiplexer. The windowing hardware allows the display controller to support multiple windows that can independently scroll or pan waveform and graphical data.

The Arbitration Logic is used to determine the local bus master (the master is either the processor, the PCI Interface Controller, DRAM Controller or the Memory Controller). Inputs to the arbitration logic block are the bus request from the processor, the bus request from the PCI Interface Controller, the DRAM controller bus request and the request for VRAM memory to register transfer from the Memory Controller.

The memory controller logic initiates and controls the VRAM memory to shift register transfers. VRAM memory to shift register transfers are used to change the stream of dynamic pixel data from the VRAMs to a different location of the VRAM. This allows the data for each window to reside anywhere in the VRAM without regard to the location that the data is displayed on the screen. Inputs to the memory controller are the windowing data from the VRAM and the bus grant signal from the arbitration logic.

The Pixel Mux formats the pixel information for the RAMDAC. The inputs to the pixel mux are the dynamic pixel data, the static pixel data and the pixel formatting control signals from the Memory Controller. The dynamic pixel data and the static pixel data from the VRAMs are latched (pipelined) in the pixel multiplexer. The pixel tap data from the Memory controller is used to provide single pixel increments for horizontal panning. Data is read from the VRAMs on a 32-bit bus and contains four sixteen-bit pixels. The pixel tap data allows the display for an individual window to begin at a pixel boundary rather than only on 32 bit boundaries. The pixel mux also determines display priority between the static plane and the dynamic plane. A “0” value on the overlaying plane is used to indicate transparency and the underlaying plane pixel value will be displayed. This feature is used to provide static text overlaying dynamic graphical data.

The RAMDAC used on the circuit board is a Brooktree Bt485A. The RAMDAC provides the analog video output signals. The RAMDAC accepts pixel information from the pixel mux and uses this pixel information as inputs to the RAM in the RAMDAC. The RAM is configured to contain 32 levels of intensity for each of the three colors Red, Green and Blue. Optionally one of the colors may have 64 levels of intensity. Since each color can have its intensity selected independently of the other two colors the total number of colors available at any time is 32 x 32 x 64 or 65,536. The RAMDAC also contains the on-chip cursor and provides a clock signal used on the board.

The dynamic pixel VRAM provides enough memory for 2 and 2/3 screens of 1024 x 768 16-bit pixel planes. The static pixel VRAM provides enough memory for one screen of 1024 x 768 16-bit pixels. The static VRAM also has an additional 512 KBytes of memory is used by the processor for program memory and windowing parameter memory. The VRAMs used are 4 MBit VRAMs organized as 256K x 16 bits.

Riser Interface PCB

The Solar 9500 Riser Interface board provides interconnection between the NLX motherboard and system plug-in boards. The Riser Interface board can accommodate up to 3 PCI plug in boards and one ISA board. The Riser Interface board contains two Intel 82596CA Network controller chips that provide the Unity Network MC network and the Tramnet Network interfaces when the Riser I/O board is installed. The Riser Interface board also performs power supply monitoring functions, has connectors for a floppy drive, two IDE connectors for hard drives, a power supply connector, and a speaker connector.

The Riser Interface board has a 304-pin connector that provides the connection to the NLX motherboard. The PCI bus signals from the NLX motherboard connector are routed to three PCI connectors on the Riser Interface board to accommodate up to 3 PCI plug-in boards. The PCI bus signals are also routed to the PLX 9080 PCI Interface Controller that is used to interface the PCI bus to a Local bus on the Riser Interface board. The local bus provides access to two Intel 82596CA Network Controller chips, 256K bytes of SRAM and the local bus controller. The Intel 82596CA chips are used to control the Tramnet and the MC network Ethernet when the Riser I/O board is plugged into the Riser Interface board. The SRAM is used by the system to buffer data to and from the Tramnet and the MC network Ethernet. The Local bus controller provides the local bus arbitration and status registers to monitor and control the local arbitration and interrupts.

The IDE bus and Floppy Interface signals are routed directly from the NLX motherboard connector to the IDE connectors and a Floppy Interface connector.

The ISA bus signals are routed from the NLX motherboard connector to an ISA connector on the Riser Interface board and also to a National Semiconductor LM78 System Hardware Monitor chip. One ISA board may be plugged into the Riser Interface board. The LM78 chip is used to monitor the AC power and battery supply voltages.

Audio signals are routed from the NLX motherboard through an audio amplifier on the Riser Interface board to a speaker connector on the Riser Interface board.

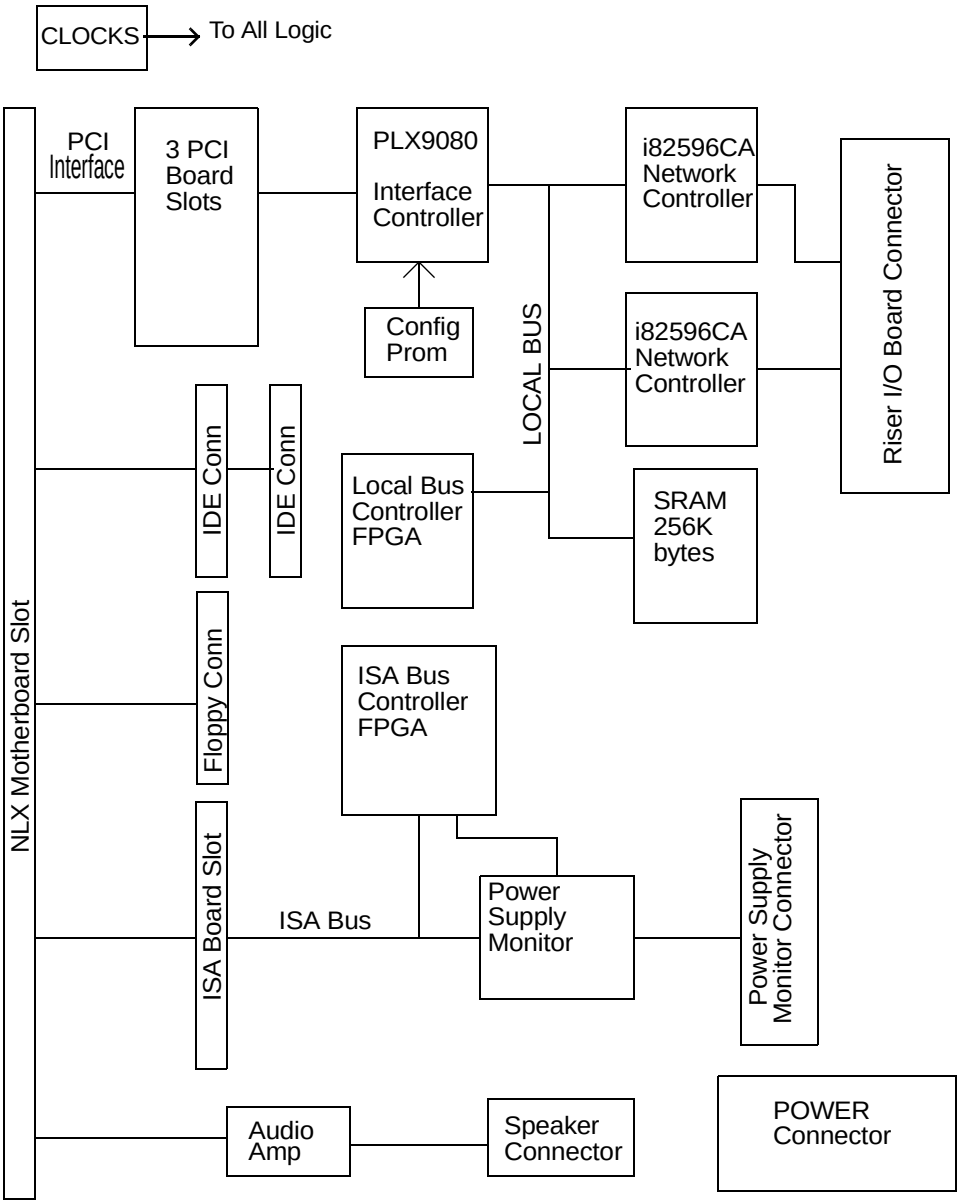

Riser I/O PCB

The Solar 9500 Riser I/O board provides the drivers, receivers, protection circuitry and connectors for the Tramnet and Ethernet interfaces for the Solar 9500 Information Monitor.

The Riser I/O board accepts 16.75V power from the power supply and provides an isolation barrier and filtering on the Riser I/O board before routing the 16.75V filtered power to the three Tramnet connectors. The Tramnet Hub, Tramnet Drivers and receivers and protection circuitry are located on the Riser I/O board. The Tramnet Hub Multiplexes/ Demultiplexes data from the three Tramnet connectors on the Riser I/O board into the single LAN bus format that is connected to the Riser Interface board via a 30 pin connector on the Riser I/O board. The 30 pin connector is also used to route the signals from the Ethernet LXT905 Ethernet Adapter to the Riser Interface board. The Ethernet Transformers, protection circuitry and connector also reside on the Riser I/O board.

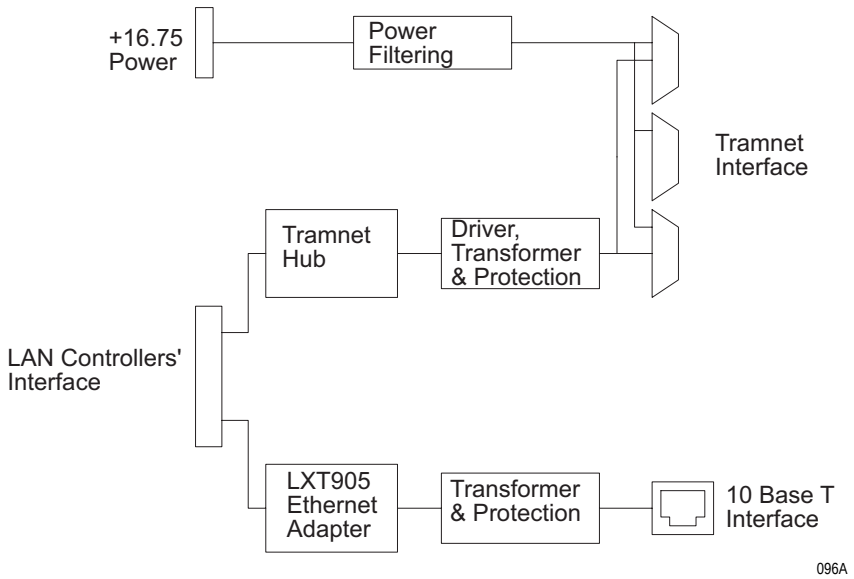

M-Port PCB

The M-Port board plugs into one of the PCI bus slots. The board provides the addition of three M-Port connections to the host system. Each M-Port connection uses a RJ-45 connector and may communicate in either the 10Base-T ethernet format or the RS-232 serial format. The three ports operate simultaneously. For an RS-232 connected device, the circuit board uses a one-wire serial data transfer to provide identification of certain connected devices.

The circuit board is capable of supporting a combination polling/status monitoring operation independently for each M-Port to determine the connectivity on each M-Port. If no device is detected on the M-Port, the M-Port switches between the 10Base-T ethernet mode and the RS-232 mode until a device is detected. Devices may be identified by the ethernet

link indicator active, or by polling the interface for responses in each M-Port mode. If an ethernet device is operating, the host monitors the ethernet link state bit and remains in the ethernet 10Base-T mode until the link state bit indicates the ethernet device is no longer active. If a serial RS-232 device is active the host remains in the serial RS-232 mode until the host software determines that the RS-232 device is no longer present.

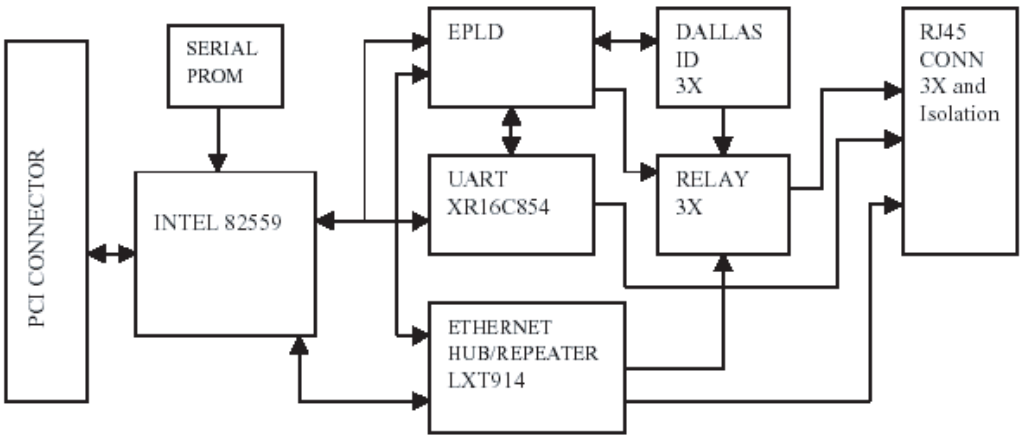

107A

Signal Descriptions

Power Supply PCB Connectors

J1 - Power Supply Output Connector (to Riser Board)

Pin	Signal Name
J1-1	+3.3V
J1-2	+3.3V
J1-3	GND
J1-4	+5.0
J1-5	GND
J1-6	+5.0V
J1-7	GND
J1-8	PW-OK
J1-9	+5.0V (Vsb)
J1-10	+12.0V
J1-11	+3.3V
J1-12	-12.0V
J1-13	GND
J1-14	N/C
J1-15	GND
J1-16	GND
J1-17	GND
J1-18	-5.0V
J1-19	+5.0V
J1-20	+5.0V

J3 - Hard Drive Power

Pin	Signal Name
J3-1	+12V
J3-2	GND
J3-3	GND
J3-4	+5V

J5 - Battery Input Connector

Pin	Signal Name
J5-1	VB13.2
J5-2	GND
J5-3	VB7.2
J5-4	VB13.2
J5-5	GND
J5-6	N/C

J6 - Signal Interface

Pin	Signal Name	Input/output	Signal range	Output Impedance
J6-1	VB7.2	output	6.5 to 9 V	10KΩ
J6-2	VB13.2	output	12 to 16.5 V	10KΩ
J6-3	BATCON*	input	0 to 5V	n/a
J6-4	N/C			n/a
J6-5	+16.75_MON	output	16.4 to 17.2 V	10KΩ
J6-6	PS_ID_1	output	0 or 5V	0Ω
J6-7	PS_ID_2	output	0 or 5V	0Ω
J6-8	GND	output	0V	0Ω
J6-9	GND	output	0V	0Ω
J6-10	TEMP_OUT	output	0 to 1.50 V 10mV/°C	0.1Ω@1mA load

J7 - 16.75 Volt Tramnet Power Output

Pin	Signal Name
J7-1	+16.75
J7-2	+16.75
J7-3	GND
J7-4	GND

J8 - AC Mains Power Input Connector

Pin	Signal Name
J8-1	AC LINE
J8-2	NO CONNECT
J8-3	AC LINE

J9 - Fan #1 Connector (internal use)

Pin	Signal Name
J9-1	+12V
J9-2	GND

J10 - Fan # 2 (external) connector

Pin	Signal Name
J10-1	+12V
J10-2	GND

Video PCB Connectors

J1 - PCI Connector

Pin	Signal Name	Connector/Pin	Signal Name
A1	TRST* (NC)	B1	-12V (NC)
A2	+12V (NC)	B2	TCK (NC)
A3	TMS (NC)	B3	GND
A4	TDI (NC)	B4	TDO (NC)
A5	+5V	B5	+5V
A6	INTA*	B6	+5V
A7	INTC* (NC)	B7	INTB* (NC)
A8	+5V	B8	INTD* (NC)
A9	RSVD (NC)	B9	PRSNT1* (NC)
A10	+VIO	B10	RSVD (NC)
A11	RSVD (NC)	B11	PRSNT2*
A14	RSVD (NC)	B14	RSVD (NC)
A15	RST*	B15	GND
A16	+VIO	B16	CLK
A17	GNT*	B17	GND
A18	GND	B18	REQ*
A19	RSVD (NC)	B19	+VIO
A20	AD30	B20	AD31
A21	+3.3V	B21	AD29
A22	AD28	B22	GND
A23	AD26	B23	AD27
A24	GND	B24	AD25
A25	AD24	B25	+3.3V
A26	IDSEL	B26	C/BE3*
A27	+3.3V	B27	AD23
A28	AD22	B28	GND
A29	AD20	B29	AD21
A30	GND	B30	AD19
A31	AD18	B31	+3.3V

Pin	Signal Name	Connector/Pin	Signal Name
A32	AD16	B32	AD17
A33	+3.3V	B33	C/BE2*
A34	FRAME*	B34	GND
A35	GND	B35	IRDY*
A36	TRDY*	B36	+3.3V
A37	GND	B37	DEVSEL*
A38	STOP*	B38	GND
A39	+3.3V	B39	LOCK*
A40	SDONE (NC)	B40	PERR*
A41	SBO* (NC)	B41	+3.3V
A42	GND	B42	SERR*
A43	PAR	B43	+3.3V
A44	AD15	B44	C/BE1*
A45	+3.3V	B45	AD14
A46	AD13	B46	GND
A47	AD11	B47	AD12
A48	GND	B48	AD10
A49	AD9	B49	GND
A52	C/BE0*	B52	AD8
A53	+3.3V	B53	AD7
A54	AD6	B54	+3.3V
A55	AD4	B55	AD5
A56	GND	B56	AD3
A57	AD2	B57	GND
A58	AD0	B58	AD1
A59	+VIO	B59	+VIO
A60	REQ64* (NC)	B60	ACK64* (NC)
A61	+5V	B61	+5V
A62	+5V	B62	+5V

J2 - 15 Pin Video Connector

Pin #	Signal Name	I/O	Signal Type	Description
1	RED	O	VIDEO	Red Video Signal
2	GREEN	O	VIDEO	Green Video Signal.
3	BLUE	O	VIDEO	Blue Video Signal
4	VIDID(2)	I	TTL	Video Monitor ID bit 2.
5	GND	I	RETURN	Ground
6	GND	I	RETURN	Ground.
7	GND	I	RETURN	Ground.
8	GND	I	RETURN	Ground.
9	NC (KEY)	I	KEY	Keying pin.
10	DGND	I	RETURN	Ground return for CSYNCOUT*.
11	VIDID(0)	I	TTL	Video Monitor ID bit 0.
12	VIDID(1)	I	TTL	Video Monitor ID bit 1.
13	HSYNCL/CSYNCL	O	TTL	Horizontal or Composite Sync signal. Active Low TTL level signal.
14	VSYNCL	O	TTL	Vertical Sync Signal. Active Low TTL level signal.
15	VIDID(3)	I	TTL	Video Monitor ID bit 3

J3 - 10 Pin Programming Header

Pin	Signal Name	Connector/Pin	Signal Name
A1	TCK	B1	GND
A2	TDO	B2	+5V
A3	TMS	B3	NC
A4	NC	B4	NC
A5	TDI	B5	GND

J4 - 4 Pin Sync Select Header

Pin	Signal Name	Connector/Pin	Signal Name
A1	HSYNCSEL	B1	GND
A2	NC	B2	GND

Riser Interface PCB Connectors

The NLX connector provides a card edge connection for the NLX motherboard to plug into the Riser Interface board. The NLX connector is a 340 pin (2 x 170), 1 mm pitch, card edge connector. The “A” side connects to the bottom (secondary) side of the motherboard, and the “B” side connects to the top (primary) side of the motherboard. Pin 1 is toward the back of the motherboard (back panel I/O connectors The NLX connector pinout is shown in sections because it is routed to multiple connectors on the Riser Interface board. The NLX connector pinout is shown in sections because it is routed to multiple connectors on the Riser Interface board.

J1 - PCI Section, NLX Connector

Pin	Signal Name	Pin	Signal Name
J1-A1	-12V	J1-B1	PCSPKR_RT
J1-A2	REQ4*	J1-B2	+12V
J1-A3	+12V	J1-B3	PCSPKR_LFT
J1-A4	GNT4*	J1-B4	+12V
J1-A5	3.3VDC	J1-B5	PCICLK0
J1-A6	PCIINT3*	J1-B6	GND
J1-A7	3.3VDC	J1-B7	PCICLK1
J1-A8	PCIINT0*	J1-B8	SER_IRQ
J1-A9	PCIINT1*	J1-B9	PCIINT2*
J1-A10	PCICLK2	J1-B10	3.3VDC
J1-A11	3.3VDC	J1-B11	PCICLK3
J1-A12	PCI_RST*	J1-B12	GND
J1-A13	GNT0*	J1-B13	GNT3*
J1-A14	PCICLK4	J1-B14	3.3VDC
J1-A15	GND	J1-B15	GNT2*
J1-A16	GNT1*	J1-B16	AD(31)
J1-A17	3.3VDC	J1-B17	REQ0*
J1-A18	REQ2*	J1-B18	GND
J1-A19	REQ3*	J1-B19	AD(29)
J1-A20	AD(30)	J1-B20	AD(28)
J1-A21	GND	J1-B21	AD(26)
J1-A22	AD(25)	J1-B22	3.3VDC
J1-A23	REQ1*	J1-B23	AD(24)

Pin	Signal Name	Pin	Signal Name
J1-A24	AD(27)	J1-B24	C/BE(3)*
J1-A25	3.3VDC	J1-B25	AD(22)
J1-A26	AD(23)	J1-B26	GND
J1-A27	AD(20)	J1-B27	AD(21)
J1-A28	AD(18)	J1-B28	AD(19)
J1-A29	GND	J1-B29	AD(16)
J1-A30	AD(17)	J1-B30	3.3VDC
J1-A31	IRDY*	J1-B31	C/BE(2)*
J1-A32	DEVSEL*	J1-B32	FRAME*
J1-A33	3.3VDC	J1-B33	TRDY*
J1-A34	STOP*	J1-B34	GND
J1-A35	PERR*	J1-B35	SDONE
J1-A36	SERR*	J1-B36	LOCK*
J1-A37	GND	J1-B37	SBO*
J1-A38	C/BE(1)*	J1-B38	3.3VDC
J1-A39	AD(13)	J1-B39	AD(15)
J1-A40	AD(10)	J1-B40	PAR
J1-A41	GND	J1-B41	AD(14)
J1-A42	C/BE(0)*	J1-B42	GND
J1-A43	AD(00)	J1-B43	AD(11)
J1-A44	AD(06)	J1-B44	AD(12)
J1-A45	3.3VDC	J1-B45	AD(09)
J1-A46	AD(05)	J1-B46	3.3VDC
J1-A47	AD(01)	J1-B47	AD(08)
J1-A48	AD(03)	J1-B48	AD(07)
J1-A49	GND	J1-B49	AD(04)
J1-A50	AD(02)	J1-B50	GND
J1-A51	5VDC	J1-B51	PCI_PM*

J1 - ISA Section, NLX Connector

Pin	Signal Name	Pin	Signal Name
J1-A52	RSTDRV	J1-B52	5VDC
J1-A53	IOCHK*	J1-B53	IRQ9
J1-A54	SD(6)	J1-B54	DRQ2
J1-A55	SD(7)	J1-B55	SD(3)
J1-A56	SD(4)	J1-B56	0WS*
J1-A57	5VDC	J1-B57	SD(1)
J1-A58	SD(2)	J1-B58	AEN
J1-A59	SD(5)	J1-B59	IOCHRDY
J1-A60	SD(0)	J1-B60	SA(18)
J1-A61	SMEMW*	J1-B61	SMEMR*
J1-A62	SA(19)	J1-B62	SA(16)
J1-A63	IOW*	J1-B63	IOR*
J1-A64	SA(17)	J1-B64	DRQ3
J1-A65	GND	J1-B65	SA(15)
J1-A66	DACK3*	J1-B66	GND
J1-A67	SA(14)	J1-B67	SA(13)
J1-A68	DACK1*	J1-B68	5VDC
J1-A69	DRQ1	J1-B69	REFRESH*
J1-A70	SA(12)	J1-B70	SA(11)
J1-A71	SYSCLK	J1-B71	SA(10)
J1-A72	SA(9)	J1-B72	IRQ7
J1-A73	5VDC	J1-B73	IRQ6
J1-A74	IRQ5	J1-B74	SA(8)
J1-A75	SA(7)	J1-B75	SA(6)
J1-A76	IRQ3	J1-B76	DACK2*
J1-A77	IRQ4	J1-B77	SA(4)
J1-A78	SA(5)	J1-B78	GND
J1-A79	TC	J1-B79	SA(3)
J1-A80	BALE	J1-B80	SA(2)
J1-A81	GND	J1-B81	SA(1)
J1-A82	OSC	J1-B82	SA(0)

Pin	Signal Name	Pin	Signal Name
J1-A83	IOCS16*	J1-B83	SBHE*
J1-A84	MEMCS16*	J1-B84	LA(23)
J1-A85	IRQ11	J1-B85	LA(22)
J1-A86	IRQ10	J1-B86	LA(21)
J1-A87	IRQ15	J1-B87	LA(20)
J1-A88	IRQ12	J1-B88	LA(19)
J1-A89	GND	J1-B89	LA(18)
J1-A90	IRQ14	J1-B90	LA(17)
J1-A91	DRQ0	J1-B91	DACK0*
J1-A92	MEMR*	J1-B92	DACK5*
J1-A93	MEMW*	J1-B93	SD(8)
J1-A94	SD(9)	J1-B94	DACK6*
J1-A95	DRQ5	J1-B95	SD(10)
J1-A96	DRQ6	J1-B96	5VDC
J1-A97	5VDC	J1-B97	SD(11)
J1-A98	SD(12)	J1-B98	DRQ7
J1-A99	DACK7*	J1-B99	SD(13)
J1-A100	SD(14)	J1-B100	SD(15)
J1-A101	MASTER*	J1-B101	GND

J1 - IDE, Floppy, and Front Panel Section, NLX Connector

Pin	Signal Name	Pin	Signal Name
J1-A102	IDEA_DD8	J1-B102	GND
J1-A103	IDEA_RESET*	J1-B103	IDEA_DD7
J1-A104	IDEA_DD9	J1-B104	IDEA_DD6
J1-A105	5VDC	J1-B105	IDEA_DD5
J1-A106	IDEA_DD4	J1-B106	IDEA_DD11
J1-A107	IDEA_DD10	J1-B107	IDEA_DD12
J1-A108	IDEA_DD3	J1-B108	GND
J1-A109	IDEA_DD13	J1-B109	IDEA_DD14
J1-A110	IDEA_DD1	J1-B110	IDEA_DD2
J1-A111	GND	J1-B111	IDEA_DD0

Pin	Signal Name	Pin	Signal Name
J1-A112	IDEA_DIOW*	J1-B112	IDEA_DD15
J1-A113	IDEA_DMARQ	J1-B113	IDEA_DIOR*
J1-A114	IDEA_IORDY	J1-B114	IDEA_CSEL
J1-A115	IDEA_DMACK*	J1-B115	IDEA_INTRQ
J1-A116	RESERVED	J1-B116	5VDC
J1-A117	IDEA_DA2	J1-B117	IDEA_DA1
J1-A118	IDEA_CS0*	J1-B118	IDEA_DA0
J1-A119	5VDC	J1-B119	IDEA_CS1*
J1-A120	IDEA_DASP*	J1-B120	IDEB_DD8
J1-A121	IDEB_RESET*	J1-B121	IDEB_DD7
J1-A122	IDEB_DD9	J1-B122	GND
J1-A123	IDEB_DD6	J1-B123	IDEB_DD10
J1-A124	IDEB_DD5	J1-B124	5VDC
J1-A125	IDEB_DD11	J1-B125	IDEB_DD4
J1-A126	IDEB_DD12	J1-B126	IDEB_DD3
J1-A127	GND	J1-B127	IDEB_DD13
J1-A128	IDEB_DD2	J1-B128	IDEB_DD14
J1-A129	IDEB_DD15	J1-B129	IDEB_DD1
J1-A130	IDEB_DIOW*	J1-B130	IDEB_DD0
J1-A131	IDEB_DMARQ	J1-B131	IDEB_DIOR*
J1-A132	IDEB_IORDY	J1-B132	IDEB_CSEL
J1-A133	GND	J1-B133	IDEB_INTRQ
J1-A134	IDEB_DMACK*	J1-B134	IDEB_DA1
J1-A135	RESERVED	J1-B135	IDEB_DA2
J1-A136	IDEB_DA0	J1-B136	IDEB_CS1*
J1-A137	IDEB_CS0*	J1-B137	IDEB_DASP*
J1-A138	DRV2*	J1-B138	GND
J1-A139	5VDC	J1-B139	DRATE0
J1-A140	RESERVED	J1-B140	FDS1*
J1-A141	DENSEL	J1-B141	FSD0*
J1-A142	FDME0*	J1-B142	DIR*
J1-A143	INDX*	J1-B143	MSEN1

Pin	Signal Name	Pin	Signal Name
J1-A144	FDME1*	J1-B144	GND
J1-A145	GND	J1-B145	WRDATA*
J1-A146	WE*	J1-B146	TRK0*
J1-A147	STEP*	J1-B147	MSEN0
J1-A148	WP*	J1-B148	RDDATA*
J1-A149	HDSEL*	J1-B149	DSKCHG*
J1-A150	SDA	J1-B150	GND
J1-A151	SCL	J1-B151	IRSL0
J1-A152	FAN_TACH1	J1-B152	IRSL1
J1-A153	FAN_TACH2	J1-B153	IRSL2
J1-A154	FAN_TACH3	J1-B154	IRTX
J1-A155	FAN_CTL	J1-B155	IRRX
J1-A156	5VDC	J1-B156	FP_SLEEP
J1-A157	USB1/3_N	J1-B157	FP_RST*
J1-A158	USB1/3_P	J1-B158	GND
J1-A159	USB1/3_OC*	J1-B159	PWRLED*
J1-A160	USB2/4_N	J1-B160	PWOK
J1-A161	USB2/4_P	J1-B161	SOFT_ON/OFF*
J1-A162	USB2/4_OC*	J1-B162	PS_ON*
J1-A163	GND	J1-B163	LAN_WAKE
J1-A164	VBAT	J1-B164	LAN_ACTVY_LED*
J1-A165	TAMP_DET*	J1-B165	MDM_WAKE*
J1-A166	MSG_WAIT_LED*	J1-B166	1394_PWR
J1-A167	1394_GND	J1-B167	RESERVED
J1-A168	RESERVED	J1-B168	RESERVED
J1-A169	5VSB	J1-B169	RESERVED
J1-A170	3.3VSENSE	J1-B170	-5V

J2, J3, and J4 PCI Connectors

Pin	Signal Name	Pin	Signal Name
JX-A1	TRST*	JX-B1	-12V
JX-A2	+12V	JX-B2	TCK
JX-A3	TMS	JX-B3	GND
JX-A4	TDI	JX-B4	TDO
JX-A5	+5V	JX-B5	+5V
JX-A6	INTA*	JX-B6	+5V
JX-A7	INTC*	JX-B7	INTB*
JX-A8	+5V	JX-B8	INTD*
JX-A9	RSVD	JX-B9	PRSNT1*
JX-A10	+VIO	JX-B10	RSVD
JX-A11	RSVD	JX-B11	PRSNT2*
JX-A14	RSVD	JX-B14	RSVD
JX-A15	RST*	JX-B15	GND
JX-A16	+VIO	JX-B16	CLK
JX-A17	GNT*	JX-B17	GND
JX-A18	GND	JX-B18	REQ*
JX-A19	RSVD	JX-B19	+VIO
JX-A20	AD30	JX-B20	AD31
JX-A21	+3.3V	JX-B21	AD29
JX-A22	AD28	JX-B22	GND
JX-A23	AD26	JX-B23	AD27
JX-A24	GND	JX-B24	AD25
JX-A25	AD24	JX-B25	+3.3V
JX-A26	IDSEL	JX-B26	C/BE3*
JX-A27	+3.3V	JX-B27	AD23
JX-A28	AD22	JX-B28	GND
JX-A29	AD20	JX-B29	AD21
JX-A30	GND	JX-B30	AD19
JX-A31	AD18	JX-B31	+3.3V
JX-A32	AD16	JX-B32	AD17
JX-A33	+3.3V	JX-B33	C/BE2*

Pin	Signal Name	Pin	Signal Name
JX-A34	FRAME*	JX-B34	GND
JX-A35	GND	JX-B35	IRDY*
JX-A36	TRDY*	JX-B36	+3.3V
JX-A37	GND	JX-B37	DEVSEL*
JX-A38	STOP*	JX-B38	GND
JX-A39	+3.3V	JX-B39	LOCK*
JX-A40	SDONE	JX-B40	PERR*
JX-A41	SBO*	JX-B41	+3.3V
JX-A42	GND	JX-B42	SERR*
JX-A43	PAR	JX-B43	+3.3V
JX-A44	AD15	JX-B44	C/BE1*
JX-A45	+3.3V	JX-B45	AD14
JX-A46	AD13	JX-B46	GND
JX-A47	AD11	JX-B47	AD12
JX-A48	GND	JX-B48	AD10
JX-A49	AD9	JX-B49	GND
JX-A52	C/BE0*	JX-B52	AD8
JX-A53	+3.3V	JX-B53	AD7
JX-A54	AD6	JX-B54	+3.3V
JX-A55	AD4	JX-B55	AD5
JX-A56	GND	JX-B56	AD3
JX-A57	AD2	JX-B57	GND
JX-A58	AD0	JX-B58	AD1
JX-A59	+VIO	JX-B59	+VIO
JX-A60	REQ64*	JX-B60	ACK64*
JX-A61	+5V	JX-B61	+5V
JX-A62	+5V	JX-B62	+5V

J5 -ISA Connectors

Pin	Signal Name	Pin	Signal Name
J5-A1	IOCHK*	J5-B1	GND
J5-A2	ISA_SD(7)	J5-B2	RESET
J5-A3	ISA_SD(6)	J5-B3	+5V
J5-A4	ISA_SD(5)	J5-B4	ISA_IRQ(9)
J5-A5	ISA_SD(4)	J5-B5	-5V
J5-A6	ISA_SD(3)	J5-B6	DRQ2
J5-A7	ISA_SD(2)	J5-B7	-12V
J5-A8	ISA_SD(1)	J5-B8	SRDY*
J5-A9	ISA_SD(0)	J5-B9	+12V
J5-A10	IOCHRDY	J5-B10	GND
J5-A11	AEN	J5-B11	SMEMW*
J5-A12	ISA_SA(19)	J5-B12	SMEMR*
J5-A13	ISA_SA(18)	J5-B13	IOW*
J5-A14	ISA_SA(17)	J5-B14	IOR*
J5-A15	ISA_SA(16)	J5-B15	DACK3*
J5-A16	ISA_SA(15)	J5-B16	DRQ3
J5-A17	ISA_SA(14)	J5-B17	DACK1*
J5-A18	ISA_SA(13)	J5-B18	DRQ1
J5-A19	ISA_SA(12)	J5-B19	REFRESH*
J5-A20	ISA_SA(11)	J5-B20	SYSCLK
J5-A21	ISA_SA(10)	J5-B21	ISA_IRQ(7)
J5-A22	ISA_SA(9)	J5-B22	ISA_IRQ(6)
J5-A23	ISA_SA(8)	J5-B23	ISA_IRQ(5)
J5-A24	ISA_SA(7)	J5-B24	ISA_IRQ(4)
J5-A25	ISA_SA(6)	J5-B25	ISA_IRQ(3)
J5-A26	ISA_SA(5)	J5-B26	DACK2*
J5-A27	ISA_SA(4)	J5-B27	TC
J5-A28	ISA_SA(3)	J5-B28	BALE
J5-A29	ISA_SA(2)	J5-B29	+5V
J5-A30	ISA_SA(1)	J5-B30	OSC
J5-A31	ISA_SA(0)	J5-B31	GND

Pin	Signal Name	Pin	Signal Name
J5-C1	SBHE*	J5-D1	MEMCS16*
J5-C2	ISA_LA(23)	J5-D2	IOCS16*
J5-C3	ISA_LA(22)	J5-D3	ISA_IRQ(10)
J5-C4	ISA_LA(21)	J5-D4	ISA_IRQ(11)
J5-C5	ISA_LA(20)	J5-D5	ISA_IRQ(12)
J5-C6	ISA_LA(19)	J5-D6	ISA_IRQ(15)
J5-C7	ISA_LA(18)	J5-D7	ISA_IRQ(14)
J5-C8	ISA_LA(17)	J5-D8	DACK0*
J5-C9	MEMR*	J5-D9	DRQ0
J5-C10	MEMW*	J5-D10	DACK5*
J5-C11	ISA_SD(8)	J5-D11	DRQ5
J5-C12	ISA_SD(9)	J5-D12	DACK6*
J5-C13	ISA_SD(10)	J5-D13	DRQ6
J5-C14	ISA_SD(11)	J5-D14	DACK7*
J5-C15	ISA_SD(12)	J5-D15	DRQ7
J5-C16	ISA_SD(13)	J5-D16	+5V
J5-C17	ISA_SD(14)	J5-D17	MASTER*
J5-C18	ISA_SD(15)	J5-D18	0V

J6 -44 Pin IDE Connector

The signals in the table below are routed from the NLX motherboard connector to the IDE connector. Note that IDE Channel is not used by the Riser Interface board.

Pin	Signal Name	NLX Conn (J1) pin #	Pin	Signal Name	NLX Conn (J1) pin #
J6-1	IDEB_RESET*	A121	J6-2	GND	-
J6-3	IDEB_DD7	B121	J6-4	IDEB_DD8	B120
J6-5	IDEB_DD6	A123	J6-6	IDEB_DD9	A122
J6-7	IDEB_DD5	A124	J6-8	IDEB_DD10	B123
J6-9	IDEB_DD4	B125	J6-10	IDEB_DD11	A125
J6-11	IDEB_DD3	B126	J6-12	IDEB_DD12	A126
J6-13	IDEB_DD2	A128	J6-14	IDEB_DD13	B127
J6-15	IDEB_DD1	B129	J6-16	IDEB_DD14	B128

Pin	Signal Name	NLX Conn (J1) pin #	Pin	Signal Name	NLX Conn (J1) pin #
J6-17	IDEB_DD0	B130	J6-18	IDEB_DD15	A129
J6-19	GND	-	J6-20	IDEKEY	-
J6-21	IDEB_DMARQ	A131	J6-22	GND	-
J6-23	IDEB_DIOW*	A130	J6-24	GND	-
J6-25	IDEB_DIOR*	B131	J6-26	GND	-
J6-27	IDEB_IORDY	A132	J6-28	IDEB_CSEL	B132
J6-29	IDEB_DMACK*	A134	J6-30	GND	-
J6-31	IDEB_INTRQ	B133	J6-32	IDEB_RESRV	-
J6-33	IDEB_DA1	B134	J6-34	NC	-
J6-35	IDEB_DA0	A136	J6-36	IDEB_DA2	B135
J6-37	IDEB_CS0*	A137	J6-38	IDEB_CS1*	B136
J6-39	IDEB_DASP*	B137	J6-40	GND	-
J6-41	+5V	-	J6-42	+5V	-
J6-43	GND	-	J6-44	GND	-

J7 -40 Pin IDE Connector

The signals in the table below are routed from the NLX motherboard connector to the IDE connector.

Pin	Signal Name	NLX Conn (J1) pin #	Pin	Signal Name	NLX Conn (J1) pin #
J7-1	IDEB_RESET*	A121	J7-2	GND	-
J7-3	IDEB_DD7	B121	J7-4	IDEB_DD8	B120
J7-5	IDEB_DD6	A123	J7-6	IDEB_DD9	A122
J7-7	IDEB_DD5	A124	J7-8	IDEB_DD10	B123
J7-9	IDEB_DD4	B125	J7-10	IDEB_DD11	A125
J7-11	IDEB_DD3	B126	J7-12	IDEB_DD12	A126
J7-13	IDEB_DD2	A128	J7-14	IDEB_DD13	B127
J7-15	IDEB_DD1	B129	J7-16	IDEB_DD14	B128
J7-17	IDEB_DD0	B130	J7-18	IDEB_DD15	A129
J7-19	GND	-	J7-20	IDEKEY	-
J7-21	IDEB_DMARQ	A131	J7-22	GND	-
J7-23	IDEB_DIOW*	A130	J7-24	GND	-
J7-25	IDEB_DIOR*	B131	J7-26	GND	-

Pin	Signal Name	NLX Conn (J1) pin #	Pin	Signal Name	NLX Conn (J1) pin #
J7-27	IDEB_IORDY	A132	J7-28	IDEB_CSEL	B132
J7-29	IDEB_DMACK*	A134	J7-30	GND	-
J7-31	IDEB_INTRQ	B133	J7-32	IDEB_RESRV	-
J7-33	IDEB_DA1	B134	J7-34	NC	-
J7-35	IDEB_DA0	A136	J7-36	IDEB_DA2	B135
J7-37	IDEB_CS0*	A137	J7-38	IDEB_CS1*	B136
J7-39	IDEB_DASP*	B137	J7-40	GND	-

J8 - 34 Floppy Connector

The signals in the table below are routed from the NLX motherboard connector to the Floppy connector.

Pin	Signal Name	NLX Conn (J1) pin #	Pin	Signal Name	NLX Conn (J1) pin #
J8-1	DRV2*	A138	J8-2	DENSEL	A141
J8-3	GND	-	J8-4	NC	-
J8-5	FLOPPYKEY	-	J8-6	DRATE0	B139
J8-7	GND	-	J8-8	INDX*	A143
J8-9	GND	-	J8-10	FDME1*	A144
J8-11	GND	-	J8-12	FDS0*	B141
J8-13	GND	-	J8-14	FDS1*	B140
J8-15	GND	-	J8-16	FDME0*	A142
J8-17	MSEN1	B143	J8-18	DIR*	B142
J8-19	GND	-	J8-20	STEP*	A147
J8-21	GND	-	J8-22	WRDATA*	B145
J8-23	GND	-	J8-24	WE*	A146
J8-25	GND	-	J8-26	TRK0*	B146
J8-27	MSEN0	B147	J8-28	WP*	A148
J8-29	GND	-	J8-30	RDDATA*	B148
J8-31	GND	-	J8-32	HDSEL*	A149
J8-33	GND	-	J8-34	DSKCHG*	B149

J9 - Power Supply Monitor Connector

Pin	Signal Name	Signal Name
1	BATT_CTR_TAP	Input. This voltage is one half the voltage on the BATTERY signal. 10 KOhm series resistor on power supply board provides short circuit protection.
2	BATTERY	Input. Battery voltage from power supply. 10 Kohm series resistor on power supply board provides short circuit protection. Nominal voltage: 14.4 VDC. Voltage output range: 12 - 18 VDC.
3	BATCON*	Output. TTL level signal to the power supply to enable the battery.
4	ACOFF*	Input. TTL level signal from the power supply.
5	+16.75_MON	Input. Voltage range is +16.75V +/- 5%. 10 Kohm series resistor on power supply board provides short circuit protection.
6	PS_ID_1	Input. TTL level signal from the power supply
7	PS_ID_2	Input. TTL level signal from the power supply
8	GND	Ground.
9	GND	Ground.
10	TEMP_OUT	Input. 10mV per degree C. Voltage output from the power supply.

J10 Speaker Connector

Pin	Signal Name	NLX Conn (J1) pin #	Pin	Signal Name	NLX Conn (J1) pin #
J10-1	SPKR_VO1	B3	J10-2	SPKR_VO2	-
J10-3	NC	-		NC	-

J11 Power Supply Connector

Pin	Signal Name	Pin	Signal Name
J11-1	+3.3VDC	J11-2	+3.3VDC
J11-3	GND	J11-4	+5VDC
J11-5	GND	J11-6	+5VDC
J11-7	GND	J11-8	PWOK
J11-9	+5VSB	J11-10	+12VDC
J11-11	+3.3VSENSE	J11-12	-12VDC
J11-13	GND	J11-14	PS_ON*
J11-15	GND	J11-16	GND
J11-17	GND	J11-18	-5VDC
J11-19	+5VDC	J11-20	+5VDC

J12 - 30 Pin Riser I/O Board Connector

The signals in the table below are routed from circuitry on the Riser Interface board to the Riser I/O Board connector.

Pin	Signal Name	Pin	Signal Name
J12-1	TNET_TXD	J12-2	TNET_TXC*
J12-3	+5VDC	J12-4	GND
J12-5	TNET_RXD	J12-6	TNET_RXC*
J12-7	TNET_RTS*	J12-8	TNET_CRS*
J12-9	+5VDC	J12-10	GND
J12-11	NC	J12-12	TNET_CDT*
J12-13	TNET_LPBK*	J12-14	TNET_RESET
J12-15	+5VDC	J12-16	GND
J12-17	ENET_LPBK*	J12-18	ENET_LITST
J12-19	NC	J12-20	ENET_CDT*
J12-21	+5VDC	J12-22	GND
J12-23	ENET_RTS*	J12-24	ENET_CRS*
J12-25	ENET_RXD	J12-26	ENET_RXC*
J12-27	+5VDC	J12-28	GND
J12-29	ENET_TXD	J12-30	ENET_TXC*

J13 - 10 Pin EPLD Programming Header

The signals in the table below are routed from programming header to the Altera EPLD and used to program the Altera EPLDs on the board.

Pin	Signal Name	Pin	Signal Name
J13-A1	PROG_TCK	J13-B1	GND
J13-A2	PROG_TDO1	J13-B2	+5VDC
J13-A3	PROG_TMS	J13-B3	NC
J13-A4	NC	J13-B4	NC
J13-A5	TDI	J13-B5	GND

J14 - 26 Pin Supplemental NLX Motherboard Connector.

Pin	Signal Name	Pin	Signal Name
J14-X1	CD_IN_LT	J14-Y1	CD_IN_RT
J14-X2	AGND	J14-Y2	CD_IN_GND
J14-X3	MIC_IN	J14-Y3	AVCC
J14-X4	LINE_OUT_LT	J14-Y4	LINE_OUT_RT
J14-X5	FP_SPKR_EN	J14-Y5	FP_MIC_EN
J14-X6	VOL_DN*	J14-Y6	VOL_UP*
J14-X7	GND	J14-Y7	AC_RST*
J14-X8	SMI*	J14-Y8	AC_SD_IN
J14-X9	RESERVED	J14-Y9	GROUND
J14-X10	RESERVED	J14-Y10	AC_SD_OUT
J14-X11	RESERVED	J14-Y11	AC_SYNC
J14-X12	AGND	J14-Y12	AC_BIT_CLK
J14-X13	MODEM_MIC	J14-Y13	MODEM_SPKR

Riser I/O PCB Connectors

J1 - 30 Pin Tramnet/Ethernet I/O Board Connector

Pin	Signal Name	Pin	Signal Name
J12-1	TNET_TXD	J12-2	TNET_TXC*
J12-3	+5V	J12-4	+5V_RETURN
J12-5	TNET_RXD	J12-6	TNET_RXC*
J12-7	TNET_RTS*	J12-8	TNET_CRS*
J12-9	+5V	J12-10	+5V_RETURN
J12-11	NC	J12-12	TNET_CDT*
J12-13	TNET_LPBK*	J12-14	TNET_RESET
J12-15	+5V	J12-16	+5V_RETURN
J12-17	ENET_LPBK*	J12-18	ENET_LITST
J12-19	NC	J12-20	ENET_CDT*
J12-21	+5V	J12-22	+5V_RETURN
J12-23	ENET_RTS*	J12-24	ENET_CRS*
J12-25	ENET_RXD	J12-26	ENET_RXC*
J12-27	+5V	J12-28	+5V_RETURN
J12-29	ENET_TXD	J12-30	ENET_TXC*

J2 - 4 Pin +16.75 Power Connector

Pin	Signal Name	Pin	Signal Name
J2-1	+16.75V	J2-3	+16.75V_RETURN
J2-2	+16.75V	J2-4	+16.75V_RETURN

J3 - 9 Pin Tramnet Connector

(J3T designates the TOP connector and J3B designates the BOTTOM connector.

Pin	Signal Name	Pin	Signal Name
J3-T1	UP_RX1+	J3-T6	F16.75V
J3-T2	F16.75V_RETURN	J3-T7	NC
J3-T3	UP_RX1-	J3-T8	F16.75V_RETURN
J3-T4	F16.75V	J3-T9	DN_TX1+

Pin	Signal Name	Pin	Signal Name
J3-T5	DN_TX1-		
J3-B1	UP_RX2+	J3-B6	F16.75V
J3-B2	F16.75V_RETURN	J3-B7	NC
J3-B3	UP_RX2-	J3-B8	F16.75V_RETURN
J3-B4	F16.75V	J3-B9	DN_TX2+
J3-B5	DN_TX2-		

J4 - Two 9 Pin Tramnet Connectors

Pin	Signal Name	Pin	Signal Name
J4-1	UP_RX3+	J4-6	F16.75V
J4-2	F16.75V_RETURN	J4-7	NC
J4-3	UP_RX3-	J4-8	F16.75V_RETURN
J4-4	F16.75V	J4-9	DN_TX3+
J4-5	DN_TX3-		

J5 - 8 Pin Ethernet Connector

Pin	Signal Name	Pin	Signal Name
J5-1	ENET_TX+	J5-5	NC
J5-2	ENET_TX-	J5-6	ENET_RX-
J5-3	ENET_RX+	J5-7	NC
J5-4	NC	J5-8	NC

M-Port PCB Connectors

J1 - PCI Connector

Pin	Signal Name	Pin	Signal Name
A1	TRST*	B1	-12V
A2	+12V	B2	TCK
A3	TMS	B3	GND
A4	TDI	B4	TDO
A5	+5V	B5	+5V
A6	INTA*	B6	+5V

Pin	Signal Name	Pin	Signal Name
A7	INTC*	B7	INTB*
A8	+5V	B8	INTD*
A9	RSVD	B9	PRSNT1*
A10	+VIO	B10	RSVD
A11	RSVD	B11	PRSNT2*
A14	RSVD	B14	RSVD
A15	RST*	B15	GND
A16	+VIO	B16	CLK
A17	GNT*	B17	GND
A18	GND	B18	REQ*
A19	RSVD	B19	+VIO
A20	AD30	B20	AD31
A21	+3.3V	B21	AD29
A22	AD28	B22	GND
A23	AD26	B23	AD27
A24	GND	B24	AD25
A25	AD24	B25	+3.3V
A26	IDSEL	B26	C/BE3*
A27	+3.3V	B27	AD23
A28	AD22	B28	GND
A29	AD20	B29	AD21
A30	GND	B30	AD19
A31	AD18	B31	+3.3V
A32	AD16	B32	AD17
A33	+3.3V	B33	C/BE2*
A34	FRAME*	B34	GND
A35	GND	B35	IRDY*
A36	TRDY*	B36	+3.3V
A37	GND	B37	DEVSEL*
A38	STOP*	B38	GND
A39	+3.3V	B39	LOCK*
A40	SDONE	B40	PERR*

Pin	Signal Name	Pin	Signal Name
A41	SBO*	B41	+3.3V
A42	GND	B42	SERR*
A43	PAR	B43	+3.3V
A44	AD15	B44	C/BE1*
A45	+3.3V	B45	AD14
A46	AD13	B46	GND
A47	AD11	B47	AD12
A48	GND	B48	AD10
A49	AD9	B49	GND
A52	C/BE0*	B52	AD8
A53	+3.3V	B53	AD7
A54	AD6	B54	+3.3V
A55	AD4	B55	AD5
A56	GND	B56	AD3
A57	AD2	B57	GND
A58	AD0	B58	AD1
A59	+VIO	B59	+VIO
A60	REQ64*	B60	ACK64*
A61	+5V	B61	+5V
A62	+5V	B62	+5V

J2, J3, J4 M-Port Connectors

Pin	Signal Name	Pin	Signal Name
1	BRD+	5	BRXD
2	BRD-	6	BTD-/SID-
3	BTD+/SID+	7	BTXD
4	RETURN	8	+5V

9 Field Replaceable Units, Parts Lists and Drawings

Ordering Parts

The parts lists and assembly drawings in this chapter supply enough detail for you to order parts for the assemblies considered field serviceable. If you require additional information, schematics, or troubleshooting assistance, contact Tech Support.

To order parts, contact Service Parts at the address or telephone number listed on the “How to Reach Us...,” page found in the front of this manual.

Field Replaceable Units

The table below lists the most commonly replaced assemblies ordered in the service spare circuit board kits. See the operator’s manual for a complete list of accessories and expendable supplies.

Field Replaceable Units	
Item	**Part Number**
Power Supply Assembly	419080-001
NLX Motherboard PCB Assembly	422593-001
Riser I/O PCB	801378-001
Video PCB	801314-001
NLX Riser Interface PCB	801376-001
Hard Drive	2002322-007
Battery Pack	413079-005
M-Port PCB Assembly	2002613-001

Disassembly/Assembly

Opening the Unit for Service

Use these step-by-step disassembly/assembly instructions when you need to replace various PCB assemblies from the monitor assembly.

WARNING
Monitoring will be interrupted. Make sure the monitor is not monitoring a patient.

WARNING
Due to possible high voltage present, use an insulated screwdriver at all times when making adjustments.

Below are the procedures for removing and replacing the front and rear plastic covers, and field replaceable units.

Remove Front and Rear Covers

1. Turn power off as instructed in "Turning Power Off" on page 3-27 and disconnect the AC power cord and all communication cables.
2. Lay the Solar 9500 processing unit on its back.
3. Press in on the two tabs and pull up to remove the front housing cover.
4. Turn the unit over and remove the four screws holding the mounting plate.
5. Remove the mounting plate and carefully lift-up the rear housing cover.

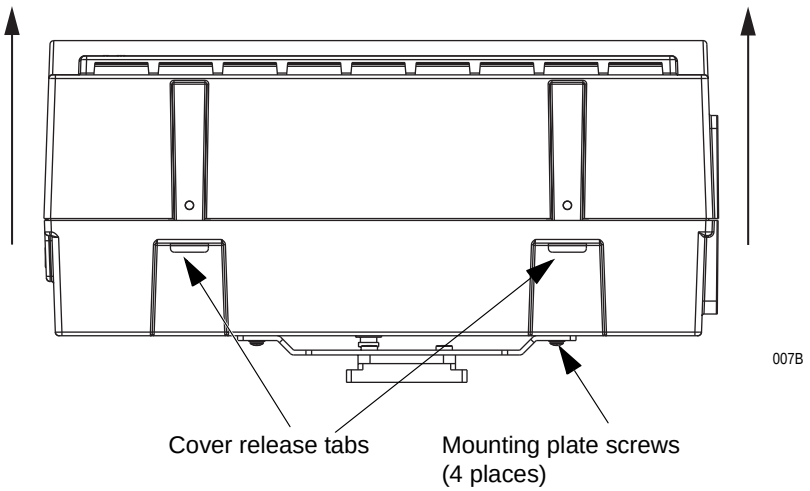

Assemble Front and Rear Covers

1. Lay the Solar 9500 processing unit on its front.
2. Place the rear housing cover and the mounting bracket on the back of the unit being careful to align the screw bosses with the openings in the plastic cover and install the four screws.
3. Turn the unit over.
4. Insert the top of the front cover into the hinges on the top of the rear cover.
5. Rotate the front cover down until the two tabs engage and lock into the rear cover.

Replace the Power Supply Assembly

CAUTIONS

The input capacitors store high voltages. After the supply is turned off, bleeder resistor R57 discharges the capacitors. It takes about 30 seconds for the voltage to discharge to a safe level.

This assembly is extremely static sensitive and should be handled using electrostatic discharge precautions.

1. Remove the front cover.
2. Loosen the two chassis mount screws and swing the power supply chassis down to access interconnecting cables.

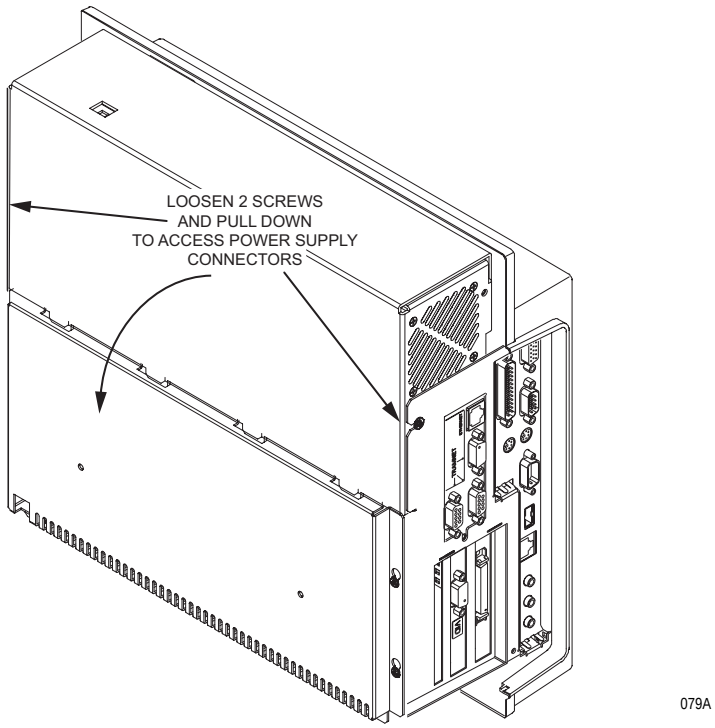

3. Disconnect the cables from J1, 3, 5, 6, 7, & 9 and remove the power supply chassis from the main assembly.

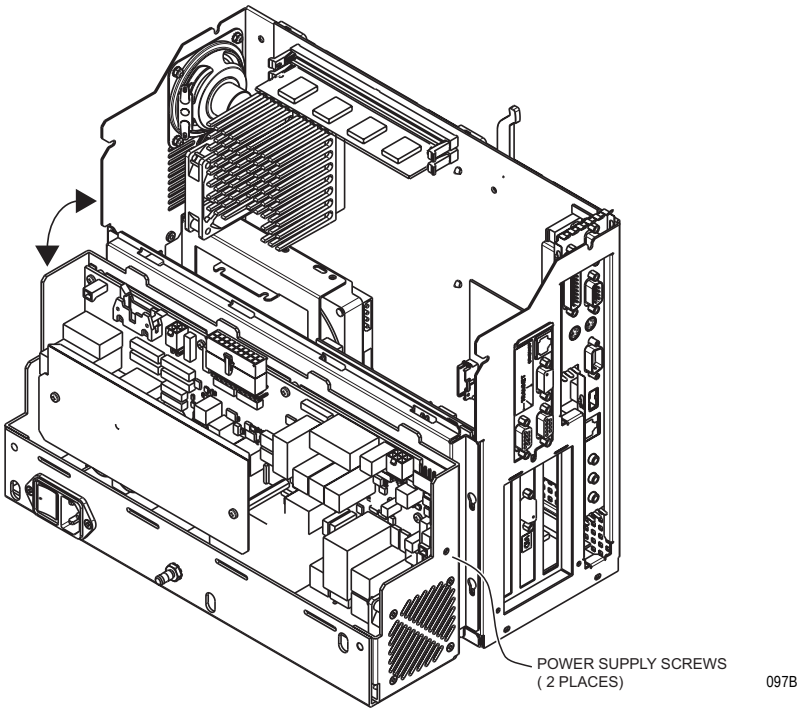

4. Replace the power supply assembly and reconnect cables.
5. Reverse the procedure to reassemble the device.
6. Reconnect the power cord and all communication cables. Test for proper operation and electrical safety (see chapter 6, Maintenance).

Replace the NLX Motherboard

CAUTION
This assembly is extremely static sensitive and should be handled using electrostatic discharge precautions.

1. Remove front and rear covers.
2. Loosen the two screws on power supply and swing the power supply down as shown.
3. Loosen the five screws on the top plate and remove.
4. Lift up on the PCB lock to release and remove the NLX Motherboard assembly.
5. Install the new NLX Motherboard assembly. Ensure that the board EMI fingers are inside the chassis channel.
6. Check that the new motherboard is properly seated then move the PCB lock to the lock position.
7. Replace the top plate and power supply then tighten all screws.
8. Replace the front and rear covers.
9. Reconnect the power cord and all communication cables. Test for proper operation and electrical safety (see chapter 6, Maintenance).

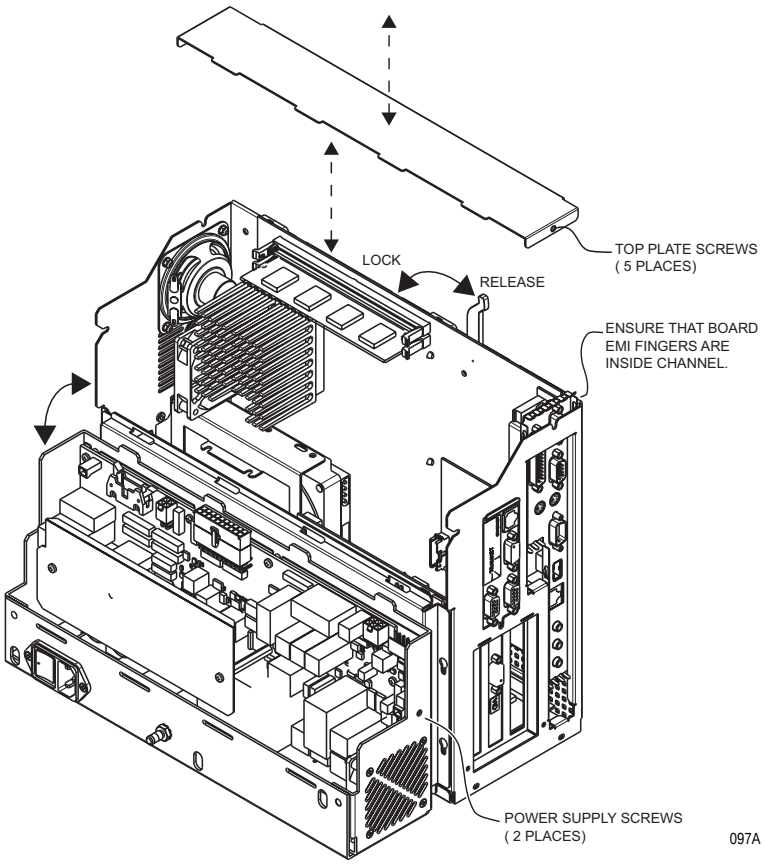

Replace Riser I/O PCB Assembly

CAUTION
This assembly is extremely static sensitive and should be handled using electrostatic discharge precautions.

1. Remove the front cover.
2. Remove the power supply as in “Replace the Power Supply Assembly” on page 4.
3. Disconnect the 4-pin power cable by gently pulling away from the board.
4. Carefully disconnect the 30-pin ribbon cable by squeezing the metal locks on either side of the connector with your thumb and index finger.
5. The 30-pin ribbon cable connector is very fragile. Take care when reattaching this cable.
6. Remove the Riser I/O board by loosing the screw on the outside of the chassis while holding on to the Riser I/O board assembly and swing the bottom of the board up and out of the unit.
7. Reverse the disassembly procedure to reassemble the unit.

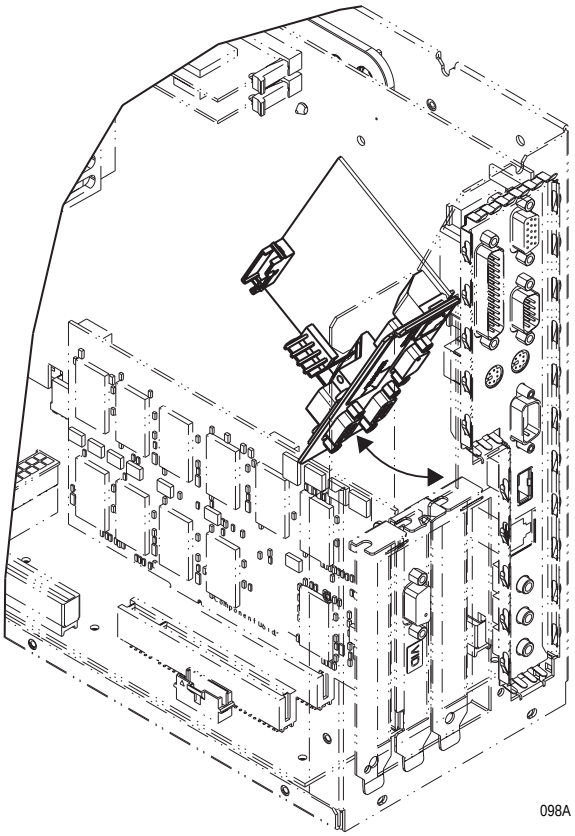

8. Reconnect the power cord and all communication cables. Test for proper operation and electrical safety (see chapter 6, Maintenance).

Replace/Add Video PCB or M-Port PCB Assembly

CAUTION
This assembly is extremely static sensitive and should be handled using electrostatic discharge precautions.

1. Remove the front cover.

CAUTION
The input capacitors store high voltages. After the supply is turned off, bleeder resistor R57 discharges the capacitors. It takes about 30 seconds for the voltage to discharge to a safe level.

2. Loosen the two chassis mount screws and swing the power supply chassis down as in “Replace the Power Supply Assembly” on page 4.
3. Remove one screw and unmount the Riser I/O board as in “Replace Riser I/O PCB Assembly” on page 7.

   NOTE
   Disconnecting cables is not necessary, although access to the PCI slot channel may be easier.

4. If adding a new board, remove the slot cover. Retain the screw and discard the bracket.
5. If replacing a Video or M-Port board, unscrew the PCB and gently pull-up while grasping the bracket and the back end of the board.
6. When inserting a new board, carefully slide the board down the PCI slot channel and push down making sure that the metal tab goes through the bottom of the chassis.

7. Screw the board bracket into the top of the PCI slot channel.

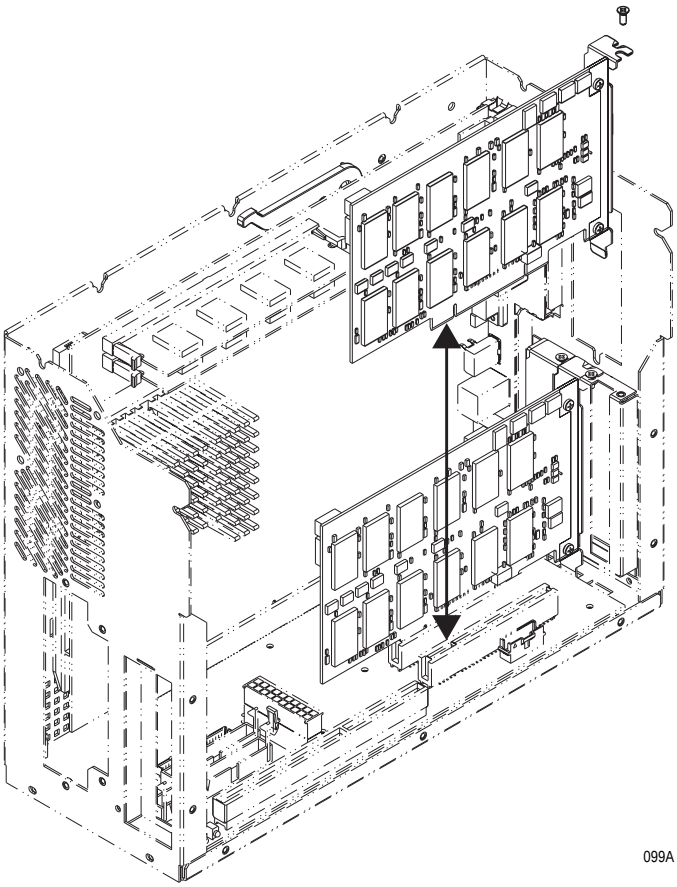

8. Reverse the disassembly procedure to reassemble the unit.
9. Reconnect the power cord and all communication cables. Test for proper operation and electrical safety (see chapter 6, Maintenance).

Replace NLX Riser Interface PCB Assembly

CAUTION
This assembly is extremely static sensitive and should be handled using electrostatic discharge precautions.

1. Remove the front and rear covers.
2. Remove the power supply as in “Replace the Power Supply Assembly” on page 4.
3. Remove the front EMI cover that contains the battery pack. Loosen seven screws, then slide the EMI cover down and lift out.
4. Remove the NLX motherboard as in “Replace the NLX Motherboard” on page 6.
5. Remove the Riser I/O board as in “Replace Riser I/O PCB Assembly” on page 7.
6. Remove any Video boards as in “Replace/Add Video PCB or M-Port PCB Assembly” on page 8.
7. Remove the fan assembly attached to the chassis by loosening the screw and lifting up on the fan bracket.
8. Remove any remaining cables to the Riser Interface board including the speaker connector.
9. Unscrew the eight screws that hold down the Riser Interface board and carefully remove the board from the chassis.

10. Reverse the disassembly procedure to reassemble the unit.

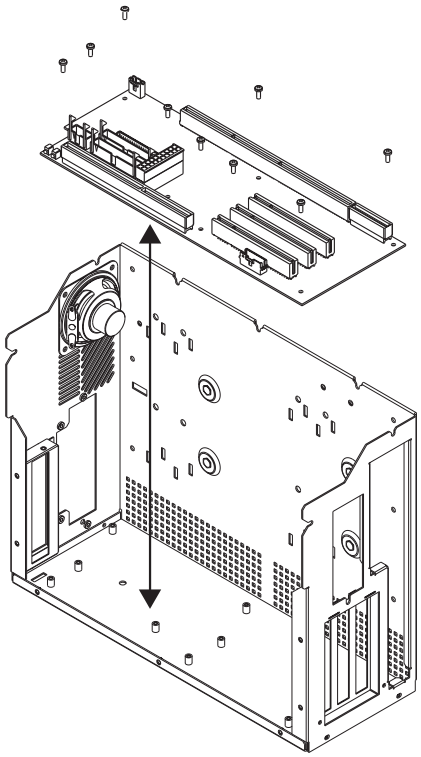

100A

11. Reconnect the power cord and all communication cables. Test for proper operation and electrical safety (see chapter 6, Maintenance).
12. From the main menu, select *Patient Data*. Select *Patient Info...* and click *OK*. This writes the system configuration information to the EEPROM.

Replace the Hard Drive

NOTE

Do not replace the NLX Riser Interface PCB Assembly and the hard drive at the same time. System configuration information is stored on these two assemblies and replacing both at the same time will result in lost system configuration information.

1. Remove front and rear covers.
2. Place unit on its side (connector panel side down).
3. Remove the four screws holding the hard drive assembly to the chassis.
4. Slide the hard drive assembly straight up and out of the chassis and disconnect the cables from the hard drive.

CAUTION
If the drive doesn't come out far enough for easy cable removal, the cables may be twisted around the processor heat sink. Carefully free the cables from the heatsink before proceeding.

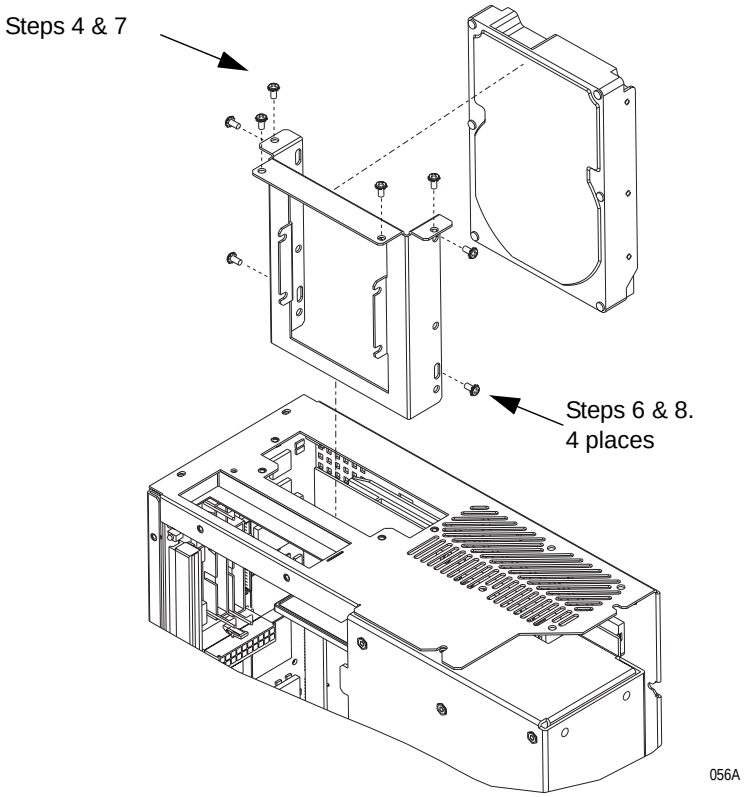

5. Remove the four screws holding the bracket to the hard drive.
6. Mount the bracket onto the new hard drive, reconnect the cables and carefully slide the new hard drive assembly straight into the chassis.

CAUTION
The hard drive assembly is very close to the CPU mother board. To prevent damage to components on this board, use care when sliding the hard drive assembly back into the chassis.

7. Replace the four screws holding the hard drive assembly to the chassis.
8. Replace front and rear covers.
9. Reconnect power cord, video cable, and network connection.
10. Proceed to "First Time Power Up".

First Time Power Up

The first time you power-up a new hard drive from GE, the software self configures and the items listed in the Solar 9500 System Configuration Record are restored except for Alarm Graph Setup and Network Printer Configuration. See "Print System Settings" on page 4-31.

NOTE

Alarm Graph Setup and Network Printer Setup must be entered manually.

Go to SERVICE MODE and select *Display setup...* then, select *Save*.

If multiple Solar 9500s are connected to the Unity Network MC network, then the following items can be pushed across the network using the network services export function as described on the next page. Otherwise they have to be manually reentered.

- Bed Layouts
- Waveform Layouts
- Parameter defaults
- Alarm Graph Setup
- Software

Export To The Network...

Exporting software or configuration information is a two step process:

- First, the software or configuration information is pushed from one Solar 9500 (the source) to one or more Solar 9500s (the destination).
- Second, the software or configuration information is activated at the local bed. This step must occur at each bedside individually while not actively monitoring a patient.

1. Enter the Service Mode menu as instructed in "Monitor Service Menu" on page 4-2.
2. Under *Network Services* select *Export To The Network...* to send bed layouts, unit defaults or Solar 9500 software to the Solar 9500 with the new hard drive on the network. A window similar to the following displays with selections for Units and Beds.

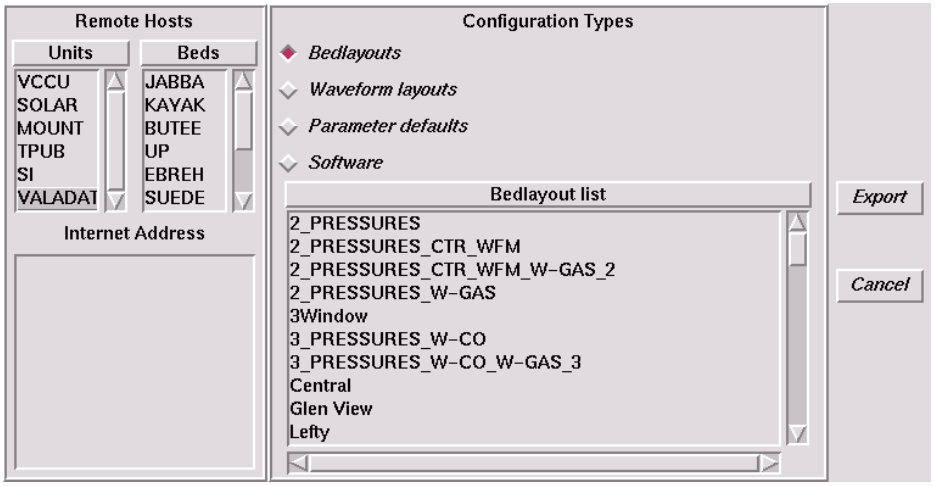

057A

3. Select a unit name and then the beds in the unit to receive the network service. Or enter the Internet Address (e.g. 126.1.2.3) to identify the receiving sites.

4. Select the configuration type (*Bedlayouts*, *Waveform layouts*, *Parameter defaults*, or *Software*) to be exported. Only one type of configuration type can be selected for export at a time.

   - If *Bedlayouts* is selected, a list of all user defined bed layouts currently present on the exporting system displays.
   - If *Waveform layouts* is selected, a list of all waveform layouts currently present on the exporting system displays.
   - If *Parameter defaults* is selected, the Unit default for all parameters as well as alarms is sent.
   - If *Software* is selected, a list of all the currently installed software releases on the exporting system displays.

NOTE

The software consists of three types: S9500 OS, System Apps., and Monitor Apps. For proper operation all three software types must be present at each Solar 9500. Each software release clarifies which versions of all three software types are required. The software is checked for required versions before being activated.

5. Select *Export* to queue the sending of all configurations that have been selected from the list or *Cancel* to close the window.

6. After an export is completed, a window listing the success/failure status of each export displays. You can now choose to *Print* or *Dismiss* (close) the window.

Message Log...

Select *Message Log...* to display and print the export message logs.

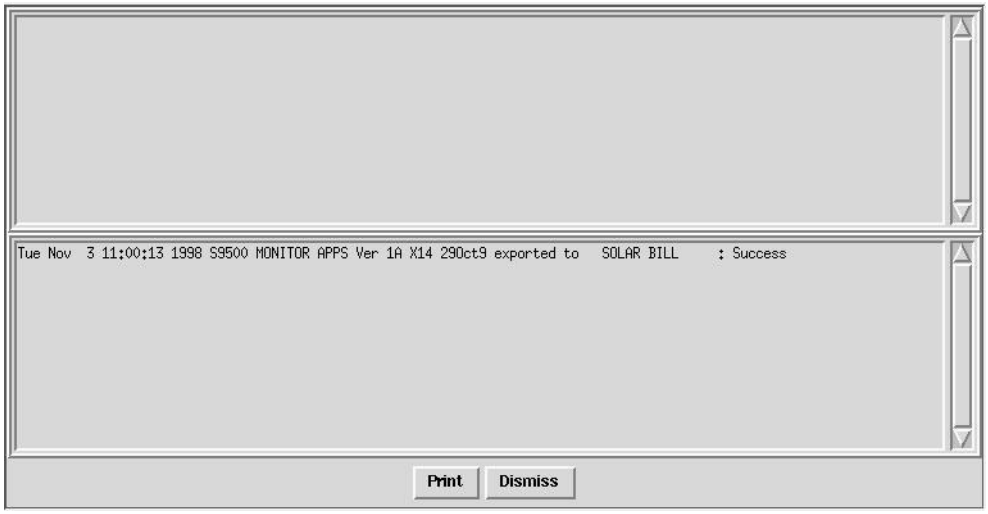

058A

Activate Locally...

Select *Activate Locally... to* open a window displaying received configurations. These configurations (*Bedlayouts*, *Waveform layouts*, *Parameter defaults*, or *Software*), must be activated to be used. When chosen, a list of items to be activated displays.

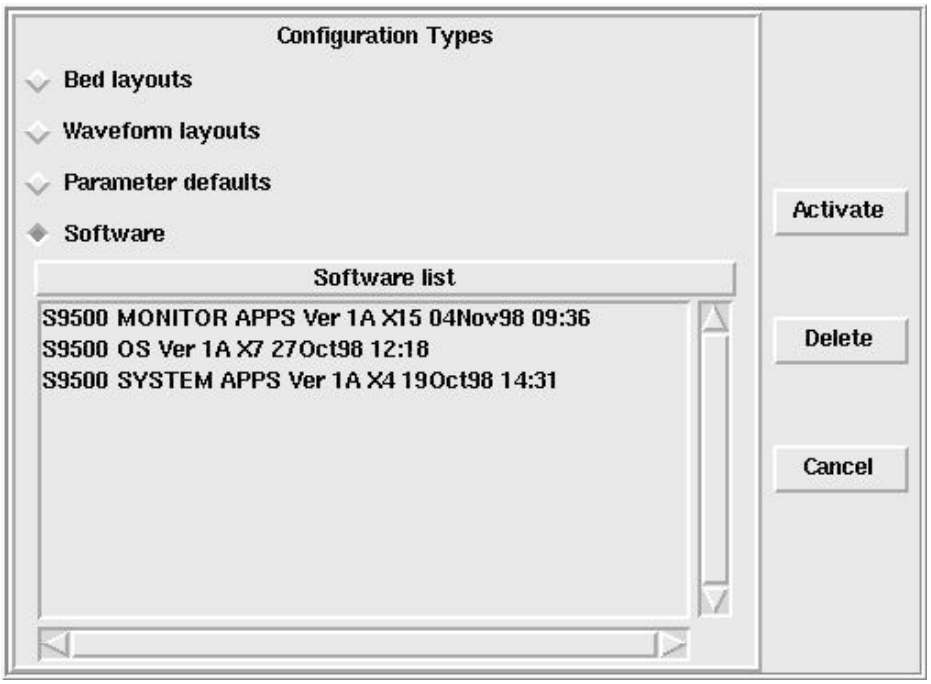

059A

Only one software configuration type can be activated at a time. After selecting, you will be queried if you really want to make the selection as it restarts the system.

CAUTION
Bed layouts, *Waveform layouts*, and *Parameter defaults* can only be activated against the same software revision that was running on the machine that exported the layouts.

Bed layouts

When bed layouts are activated:

- a pop-up menu displays whether the activation was successful or not,
- the system is restarted,
- the new bed layouts appear in the switch layout menu,
- if the current bed layout display was updated, the display changes when the system is restarted, and
- old layouts with the same name are overwritten and cannot be recovered.

Waveform layouts

When waveform layouts are activated:

- a pop-up menu displays whether the activation was successful or not,
- the system is restarted,
- the new waveform layouts appear in the window layout list of the “Configure Window” menu, and
- old layouts with the same name are overwritten and cannot be recovered.

Parameter defaults

When parameter defaults are activated:

- a pop-up menu displays whether the activation was successful or not,
- the system is restarted,
- the system switches to the newly activated parameter settings, and
- the parameter setup becomes the unit default.

NOTE
The original settings are overwritten and cannot be recovered.

Software

When software is activated:

- a test is performed on the selected software set to see if the proper versions are available for activation,
- the system deactivates the current software being replaced.
- the new software is activated and a system restart occurs, and
- the inactivated software is made available for reactivation.

Alarm Graph and Network Printer Setup

1. Manually enter Network Printer Setup per instructions in "Printing" on page 4-12.
2. Manually enter Alarm Graph Setup from the main menu. Select *Setups -> Alarm Graph Setup*.

Upper Level Assembly 901007-003A

Find Num	Item Number	Item Description	Ref Des	Qty
1	401867-001	CARD GUIDE SNAP IN 2.5L		2
2	413079-005	BATTERY PACK 9500 11AA 13.2V	A7	1
3	419080-001	ASM 9500 PWR SUPPLY	A3	1
4	419139-001	HOUSING 9500 REAR		0
5	419140-001	HOUSING 9500 FRONT		0
6	419322-001	9500 GCX MOUNTING HARDWARE		1
7	419422-003	BRKT ASM 9500 DRV BAY		1
8	419746-001	LIGHT PIPE 9500 POWER		1
9	420109-001	COVER 9500 FLOPPY OPENING		1
10	420924-002	DIMM 64MB EDD 16MX72 60NS UNB	A11,A12	2
11	421537-001	NLX RAIL CPU W/GND CLIP W/FAST		2
12	422450-001	GASKET EMC 3HX3.8W59L D PSA		3
13	422168-001	LYNXOS V2.5.1 W/TCP STRMS MOTF		1
14	421378-002	SPEAKER ASSEMBLY SOLAR CPU	SP1	1
15	700659-003	CBL ASM 9500 HD POWER	W7	1
16	700659-005	CBL ASM 9500 RISER POWER	W1	1
17	700659-006	CBL ASM 9500 PS SIGNAL	W2	1
18	700659-009	CBL ASM 9500 TRAMNET POWER	W3	1
19	700659-010	CBL ASM 9500 TRAMNET RISER	W4	1
20	700659-011	CABLE ASM 9500 3.5 HD	W6	1
21	700659-017	CBL ASM 9500 FAN	B1	1
22	2001075-001	SCR MACH FLHD M3X6LG SS W/THD LK		3
23	411059-006	SCREW SEMS PH M3-.5X6 ZIN,		16
24	411059-007	SCREW SEMS PH M3 X 22M		2
25	411061-003	SCR PH M4X0.7X8LG SEMS		4
26	411323-001	NUT HEX KEPS M3-.5 CLASS 8 ZP		4
27	411324-001	NUT HEX KEPS M4-.7 CLASS 8 ZP		2
28	419475-001	LATCH NLX CPU		1
29	419924-001	GUIDE NLX CPU RAIL		8

Find Num	Item Number	Item Description	Ref Des	Qty
30	419977-001	SCREW #6-32 NLX EJECTOR MOUNT		1
31	45000-604	SCREW SEMS PH 6-32X1/4		4
32	45209-306	SCREW PH M3 X 6MM,		9
33	413085-001	SCREW PH M3 X 8MM SS COAT		9
35	404525-006	LABEL BLANK 2.6IN X.4IN		2
36	419468-001	PCB SOLAR 9500 NLX MOTHERBOARD	A2	1
37	801376-001	PCB SOLAR 9500 NLX RISER	A1	1
38	801378-001	PCB SOLAR 9500 RISER I/O	A4	1
39	407460-003	BRKT 9500 AUTOPORT ISA BLANK		1
40	419311-001	CHASSIS ASM 9500 NLX		1
41	419533-001	BRKT 9500 CHASSIS FAN		1
42	419710-002	PANEL ASM 9500 EMI/ACCESS		1
43	419721-001	BRKT 9500 TOP CHASSIS EMI		1
44	420235-001	COVER 9500 HOUSING CABLE		1
45	45177-205	SCREW PH PLASTITE 4-20 X 3/8		3
46	9956-101	BAG ZIPLOCK CLR 2MIL POLY 3		1
47	9976-003	BAG ANTI-STATIC 9.00W X 12.50L		1
49	415043-002	LABEL PRESCRIPTION DEVICE		0
51	420220-001	LABEL 9500 PRODUCT MARK MARQ		0
52	421048-001	LABEL 9500 RATINGS		0
57	2002322-007	HD S9500 MON APPS V3A MULTI		1
59	422274-001	LBL SOLAR 9500 BATTERY CALLOUT		0
60	422293-001	LABEL SOLAR 9500 PCI		0
63	2002613-001	PCB PCI TRIPLE MPORT	A15	1

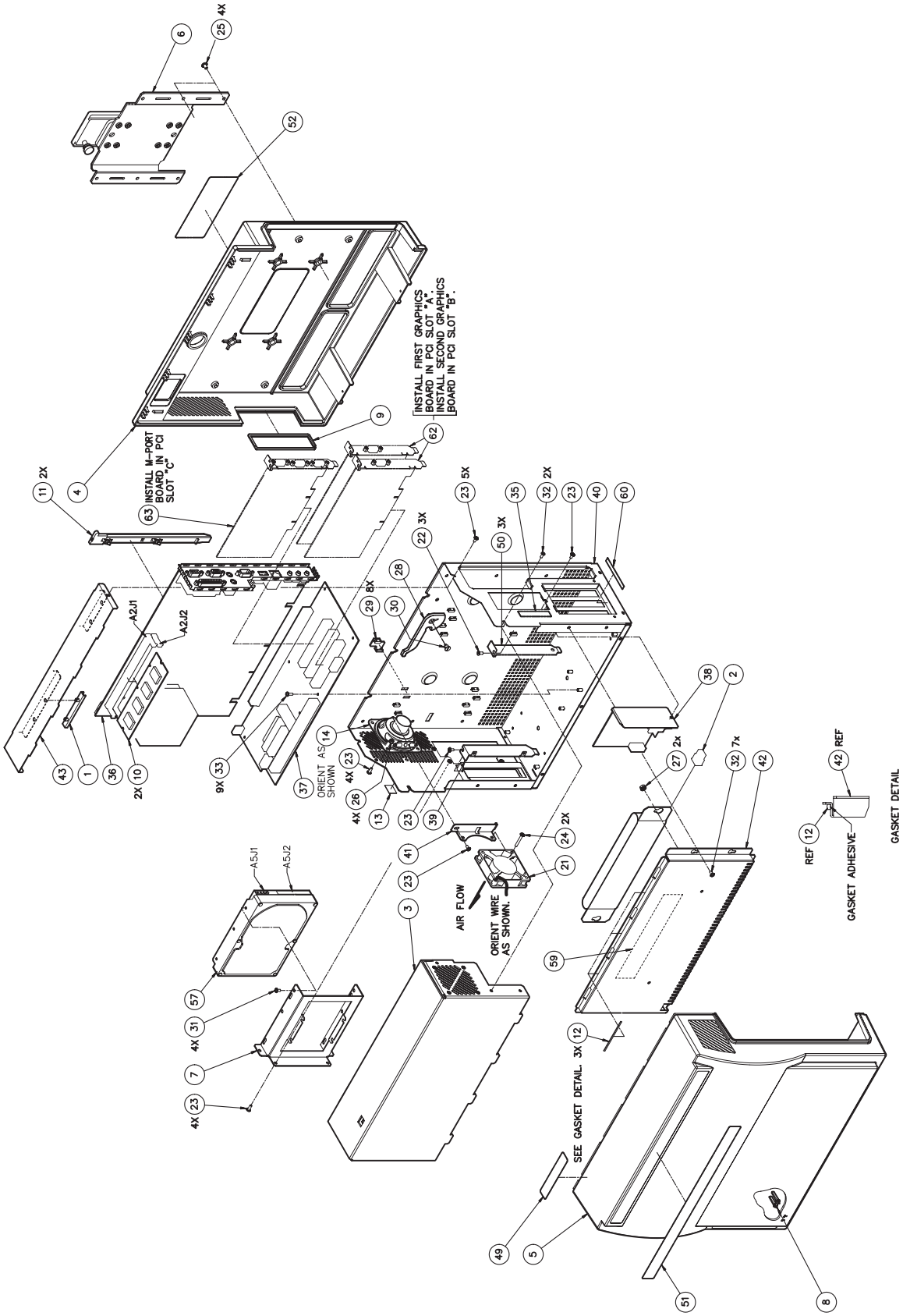
INSTALL FIRST GRAPHICS BOARD IN PCI SLOT "A".
INSTALL SECOND GRAPHICS BOARD IN PCI SLOT "B".
INSTALL M-PORT BOARD IN PCI SLOT "C"
A2J1
A2J2
A5J1
A5J2
ORIENT AS SHOWN
AIR FLOW
ORIENT WIRE AS SHOWN.
SEE GASKET DETAIL.
GASKET ADHESIVE
GASKET DETAIL
REF
2X
4X
9X
8X
5X
3X
7x
2x

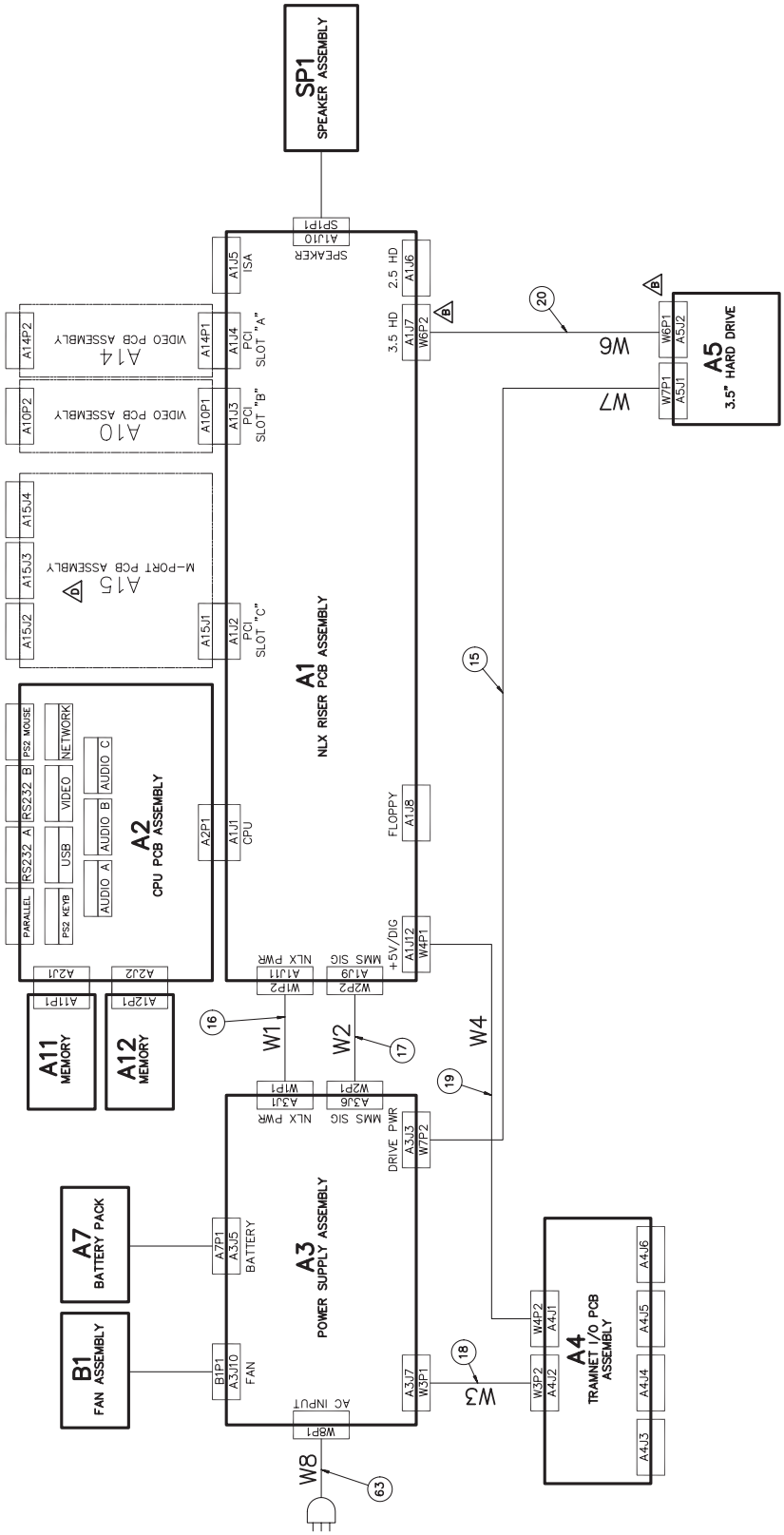
SP1
SPEAKER ASSEMBLY
SP1P1
A1J10
SPEAKER
A1J5
ISA
A14P2
A14P1
A14
VIDEO PCB ASSEMBLY
A1J4
PCI
SLOT "A"
A10P2
A10P1
A10
VIDEO PCB ASSEMBLY
A1J3
PCI
SLOT "B"
A15J4
A15J3
A15J2
A15
M-PORT PCB ASSEMBLY
A15J1
A1J2
PCI
SLOT "C"
A1
NLX RISER PCB ASSEMBLY
PARALLEL
RS232 A
RS232 B
PS2 MOUSE
PS2 KEYB
USB
VIDEO
NETWORK
AUDIO A
AUDIO B
AUDIO C
A2
CPU PCB ASSEMBLY
A2P1
A1J1
CPU
FLOPPY
A1J8
2.5 HD
A1J6
3.5 HD
A1J7
W6P2
+5V/DIG
A1J12
W4P1
NLX PWR
MMS SIG
A1J11
W1P2
A1J9
W2P2
A2J1
A2J2
A11P1
A12P1
A11
MEMORY
A12
MEMORY
W1
W2
W4
W6
W7
W3
W8
16
17
15
19
20
18
63
W1P1
W2P1
A3J1
A3J6
DRIVE PWR
A3J3
W7P2
A7
BATTERY PACK
B1
FAN ASSEMBLY
A7P1
A3J5
BATTERY
B1P1
A3J10
FAN
A3
POWER SUPPLY ASSEMBLY
AC INPUT
W8P1
A3J7
W3P1
W4P2
A4J1
W3P2
A4J2
A4
TRAMNET I/O PCB ASSEMBLY
A4J6
A4J5
A4J4
A4J3
W6P1
A5J2
W7P1
A5J1
A5
3.5" HARD DRIVE

Power Supply Assembly 419080-001B

Find Num	Item Number	Item Description	Ref Des	Qty
1	419081-001	ASM SOLAR 9500 PS CHASSIS		1
2	419961-002	INSULATOR 9500 PS AC		1
3	420252-001	INPUT MODULE 2P SW PNL MNT	SW1	1
4	801326-001	PCB SOLAR 9500 POWER SUPPLY	A1	1
5	700659-013	FAN ASM 9500 PS	B1	1
6	700659-014	CBL ASM 9500 PWR INLET CHOKE	W2	1
7	700659-015	CBL ASM 9500 PWR INLET MAIN	W1	1
8	400040-001	PLUG MC EQUIPOTENTIAL		1
9	400041-001	WASHER LOCK SERRATED F/M-6		1
10	410628-001	SCREW M3 X 20 CSK POSI S/S		4
11	411059-006	SCREW SEMS PH M3-.5X6 ZIN,		2
12	411323-001	NUT HEX KEPS M3-.5 CLASS 8 ZP		4
13	411324-001	NUT HEX KEPS M4-.7 CLASS 8 ZP		1
14	411970-002	SPACER M/F M3 X 45		2
15	412048-002	WASHER LOCK M4 EXT TOOTH		1
16	412203-001	SCREW, FLT HD M3 X 8MM LG,		2
17	45209-306	SCREW PH M3 X 6MM,		9
18	4520-606	WASHER FLAT FIBRE #6		1
19	4550-030	WASHER BELLEVILE		1

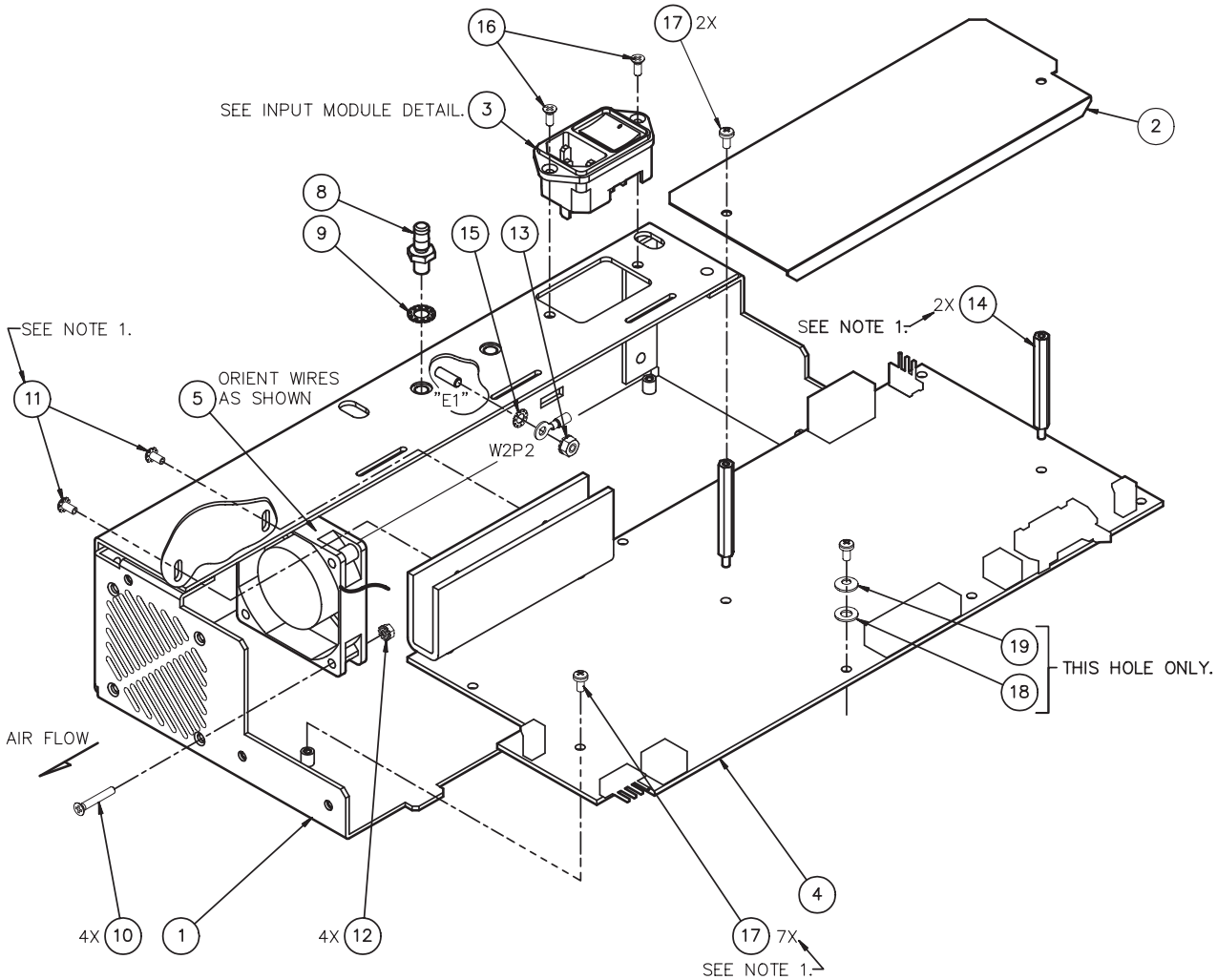

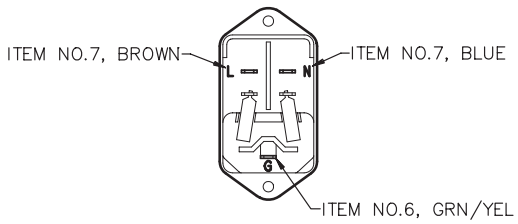

INPUT MODULE DETAIL

NOTES:

1) POSITION ITEM NO.4, PCB ASSEMBLY, SO THAT PCB IS FLUSH AGAINST CHASSIS MOUNTING STANDOFFS, AND THE HEATSINK IS FLUSH AGAINST THE CHASSIS WALL. WHILE RETAINING THE HEATSINK FLUSH AGAINST THE CHASSIS WALL, SECURE PCB ASSEMBLY USING FASTENERS SHOWN. CONTINUE SECURING HEATSINK TO CHASSIS AS SHOWN.

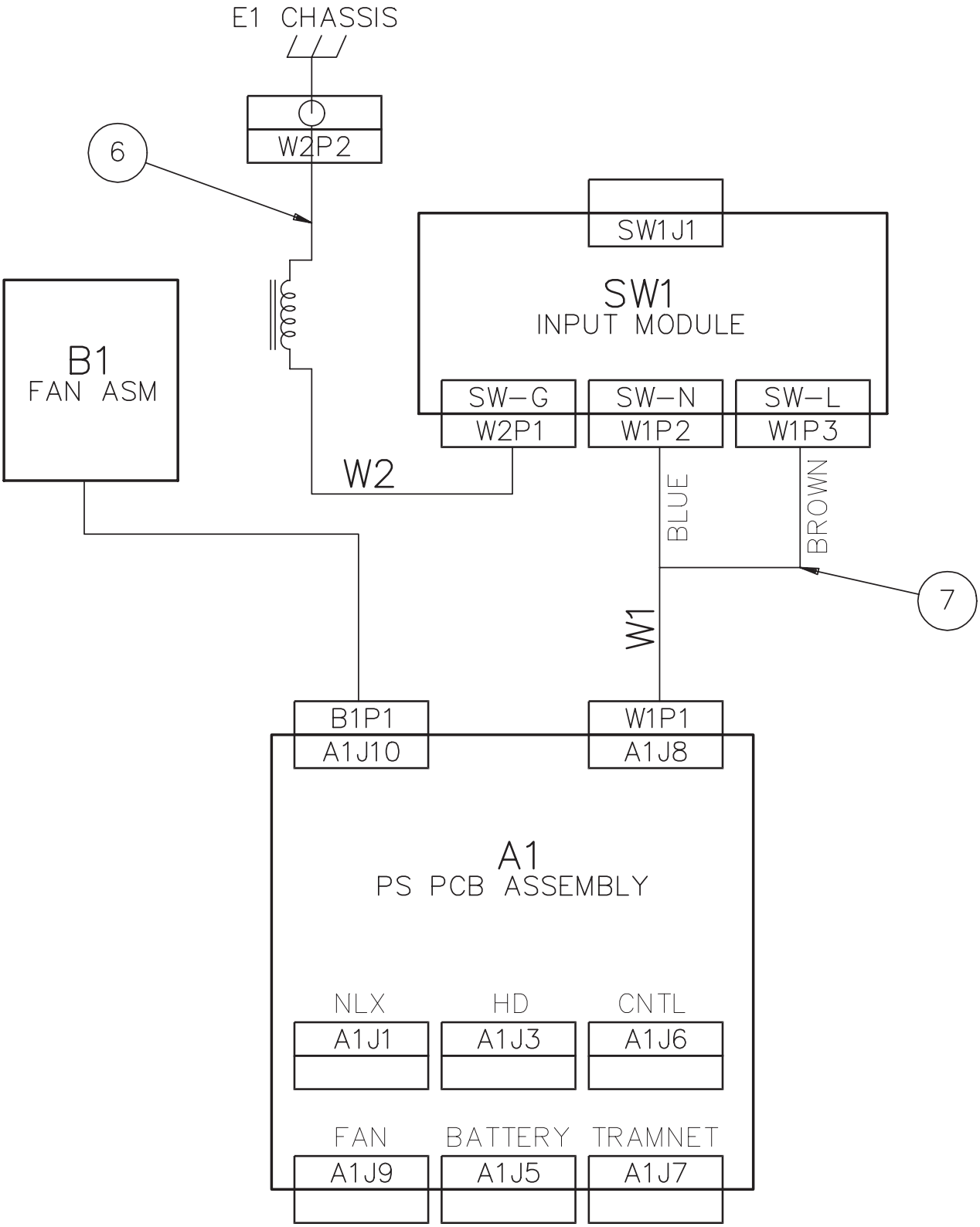
E1 CHASSIS
W2P2
6
SW1J1
SW1
INPUT MODULE
B1
FAN ASM
SW–G
W2P1
SW–N
W1P2
SW–L
W1P3
W2
BLUE
BROWN
7
W1
B1P1
A1J10
W1P1
A1J8
A1
PS PCB ASSEMBLY
NLX
A1J1
HD
A1J3
CNTL
A1J6
FAN
A1J9
BATTERY
A1J5
TRAMNET
A1J7

GE Medical Systems
Information Technologies

0459

gemedical.com

World Headquarters
GE Medical Systems
Information Technologies, Inc.
8200 West Tower Avenue
Milwaukee, WI 53223 USA
Tel: +414.355.5000
800.558.5120 (US only)
Fax: +414.355.3790

European Representative
GE Medical Systems
Information Technologies GmbH
Postfach 60 02 65
D-79032 Freiburg
Germany
Tel: +49 761 45 43 - 0
Fax: +49 761 45 43 - 233

Asia Region
GE Medical Systems Asia
7-127, Asahigaoka 4-chome
Hino-shi, Tokyo 191-8503
Japan
Tel: +81-42-582-6824
Fax: +81-42-582-6830