9546

Millennia® 3155MVS/3155A Monitor

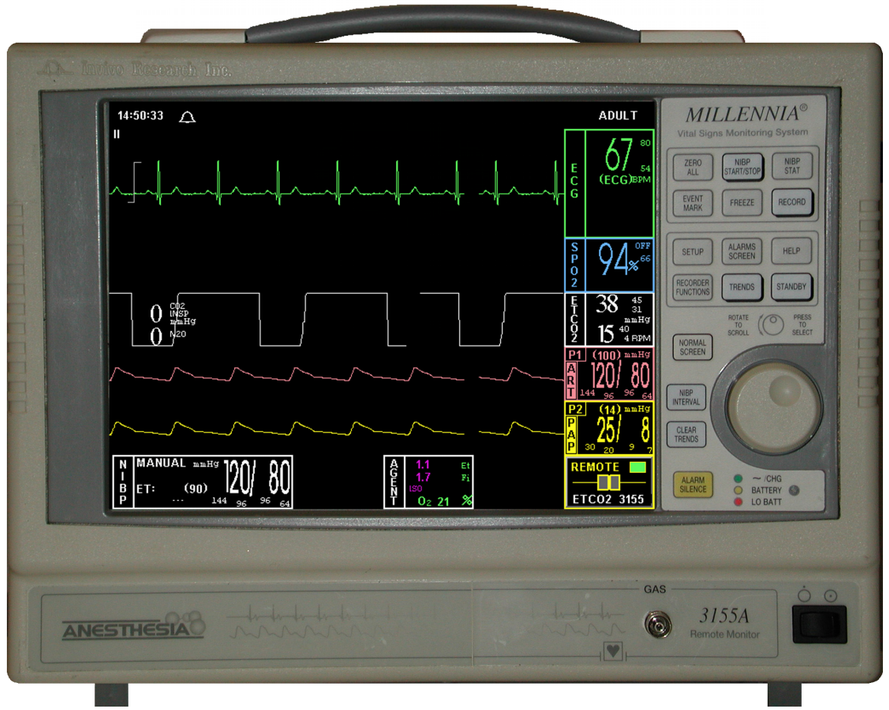

Service Manual

Volume II
Maintenance Drawings

INVIVO
RESEARCH, INC.

- INDEX -

Maintenance Drawings

NOTE

The Maintenance Drawings are listed by assembly number in ascending alphanumeric sequence. (System level drawings are presented as the first four drawings in this volume.)

Dwg. #	Rev	Used On*	P/N - Dwg. Title	Pg. #
190C057	C	3155MVS	3155MVS - Remote Display Controller Interconnect Diagram	1
190C062	D	3155A	3155A - Millennia Remote Monitor, Agents Interconnect Diagram	2
197C540	Y	3155MVS	3155MVS - Assembly, MVS Millennia Remote Display Controller	3
197C598	N	3155A	3155A - Assembly, Millennia Remote Monitor, Agents	13
C94B719	D	All	AB09A - Assembly, PCA, LCD Inverter (with Heat Shrink)	23
C94C744	C	All	AB65A - Assembly, PCA, A/D	24
194D638	AA	All	AB65 - Assembly, PCA, A/D	25
185C183	T	All	AB65/B142 - Schematic, PCA, A/D	26
C94C650	G	All	AB68 - Assembly, PCA, Keyboard Interface	31
C85C186	C	All	AB68/B144 - Schematic, PCA, Keyboard Interface	32
194D651	AD	All	AB69 - Assembly, PCA, Power Supply	33
185C187	U	All	AB69/B145 - Schematic, PCA, Power Supply	35
194D680	K	All	AB69A - Assembly, PCA, Power Switcher/Battery Charger	38
185C197	E	All	AB69A/B145A - Schematic, PCA, Power Switcher/Battery Charger	39
194D652	AD	All	AB70 - Assembly, PCA, Multi-Function I/O	40
185C188	L	All	AB70/B146 - Schematic, PCA, Multi-Function I/O	41
C94C740	D	All	AB72A - Assembly, PCA, Power Interconnect	45
C94C706	E	All	AB72 - Assembly, PCA, Power Interconnect	46
C85C206	A	All	AB72/B151 - Schematic, PCA, Power Interconnect	47
194D669	P	All	AB77 - Assembly, PCA, PCMCIA/VGA Display	48
185D193	J	All	AB77/B156 - Schematic, PCA, PCMCIA/VGA Display	49
C94C897	A	All	AB88 - Assembly, PC/AT Motherboard (with Microprocessor)	51
C94C692	H	3155A	AB93 - Assembly, PCA, Rear Panel Connectors	52
185C202	D	3155A	AB93/B165 - Schematic, PCA, Rear Panel Connectors	53
C94B711	J	All	AB97 - Assembly, PCA, Sharp 321 LCD Display, Cable Adapter	54
C85B209	C	All	AB97/B160 - Schematic, PCA, Sharp 321 LCD Display, Cable Adapter	55
C94C735	A	3155MVS	AB105 - Assembly, PCA, Sharp 35PX Passive Cable Adapter	56
C85B216	A	3155MVS	AB105/B177 - Schematic, PCA, Sharp 35PX Passive Cable Adapter	57
194C773	F	3155A	AB114 - Assembly, PCA, Agent Detector	58
185C222	F	3155A	AB114/B183 - Schematic, PCA, Agent Detector	59
194D863	B	3155A	AB117A - Assembly, PCA, Pneumatics Controller	62
194D777	H	3155A	AB117 - Assembly, PCA, Pneumatics Controller	63
185C225	E	3155A	AB117/B186 - Schematic, PCA, Pneumatics Controller	64
C94C799	C	All	AB123 - Assembly, PCA, Power/Charger LED	67
C85B227	B	All	AB123/B187 - Schematic, PCA, Power/Charger LED	68
C94B883	B	All	AB153 - Assembly, Nonvolatile RAM Adapter	69
C85B250	B	All	AB153/B207 - Schematic, Nonvolatile RAM Adapter	70
C94C870	D	All	AB155 - Asssembly, PCA, Sound Generator Module	71
185C252	B	All	AB155/B209 - Schematic, PCA, Sound Generator Module	72
C94C926	B	All	AB182B - Assembly, 2410 Radio	73
C94C922	E	All	AB182 - Assembly, PCA, 2410 Radio Adapter	74
C85C283	B	All	AB182/B238 - Schematic, PCA, 2410 Radio Adapter	75
C59C201	G	All	AC252 - Assembly, Cable, Active LCD Display	76
C59B202	E	All	AC261 - Assembly, Cable, Xentek Inverter/VGA	78
C59B195	C	All	AC266 - Assembly, Cable, Keyboard	79
C59B196	D	All	AC267 - Assembly, Cable, Battery	80
C59B198	B	All	AC269 - Assembly, Cable, Mother Board Power	81
C59B200	A	All	AC270 - Assembly, Cable, Front Power Switch	82
C59B322	A	All	AC329A - Assembly, Cable, Data Transceiver, Telemetry	83
C59B323	B	All	AC330A - Assembly, Cable, Transceiver, Telemetry	84
C59C339	E	All	AC348A - Assembly, Cable, Power Adapter	85
C59C340	B	All	AC349 - Assembly, Cable, Power - I/O	86
C59C341	C	All	AC350 - Assembly, Cable, Power Adapter LED	87
C59C342	A	All	AC351 - Assembly, Cable, Positive DC Voltage	88

Dwg. #	Rev	Used On*	P/N - Dwg. Title	Pg. #
C59C343	A	All	AC352 - Assembly, Cable, Negative DC Voltage	89
C59C344	B	All	AC354 - Assembly, Cable, Diode Power	90
C59B345	D	All	AC355 - Assembly, Cable, Low Voltage DC Power	91
C59B402	B	Com. Opt 1	AC355A - Assembly, Cable, Low Voltage DC Power	92
C59B350	A	3155A	AC362 - Assembly, Cable, Agent Power Supply Interconnect	93
C59B397	A	3155A	AC363A - Assembly, Cable, Agent A/D Interconnect	94
C94C862	B	3155A	AP49A - Assembly, Pump, Agents	95
C94C811	D	3155A	AP50 - Assembly, FiO2 Sensor Coupler	96
194B479	A	Volt Opt 1/4	AS18 - Assembly, 110V Line Cord	97
C94B639	0	Volt Opt 2	AS18G - Assembly, 10A, 220-230V Line Cord	98
194B480	A	Volt Opt 3	AS18A - Assembly, Universal 220V Power Cord Set	99
C94C689	J	Volt Opt 1-3	AS136 - Assembly, Mains/Input/Transformer	100
C94C848	A	Volt Opt 4	AS136J - Assembly, Mains/Input/Transformer	101
C94B690	E	All	AS137 - Assembly, Speaker	102
C94B739	F	3155MVS	AS141 - Assembly, Exhaust Fan (Single)	103
C94C843	B	3155A	AS141A - Assembly, Exhaust Fan (Dual)	104
194C778	K	All	AS153 - Assembly, Power Adapter	105
194C805	L	3155A	AS158 - Assembly, Anesthetic Agent Analyzer	108
C94C859	B	3155A	AS159A - Assembly, Anesthetic Agent Analyzer MDL	109
C94B828	C	3155A	AS162 - Assembly, Agent Analyzer Heater	112
C94B850	A	All	AS167 - Assembly, Noise Filter	113
C94B852	E	3155A	AS168 - Assembly, Anesthetic O2 Sensor Adapter	114
C94C858	A	3155A	AS169 - Assembly, Shielded Inductor	115

*Refer to System Dwgs. #197C540 and 197C598 for additional information on the monitor options listed in this column.

THIS DOCUMENT IS CONFIDENTIAL AND PROPRIETARY AND IS THE SOLE PROPERTY OF INVIVO RESEARCH INCORPORATED. IT IS NOT TO BE DISCLOSED TO ANY PARTY, REPRODUCED, OR USED IN ANY OTHER MANNER WITHOUT WRITTEN CONSENT OF SAID COMPANY. INVIVO MAINTAINS THE RIGHT TO CHANGE SPECIFICATIONS AT ANY TIME WITHOUT PRIOR NOTICE.

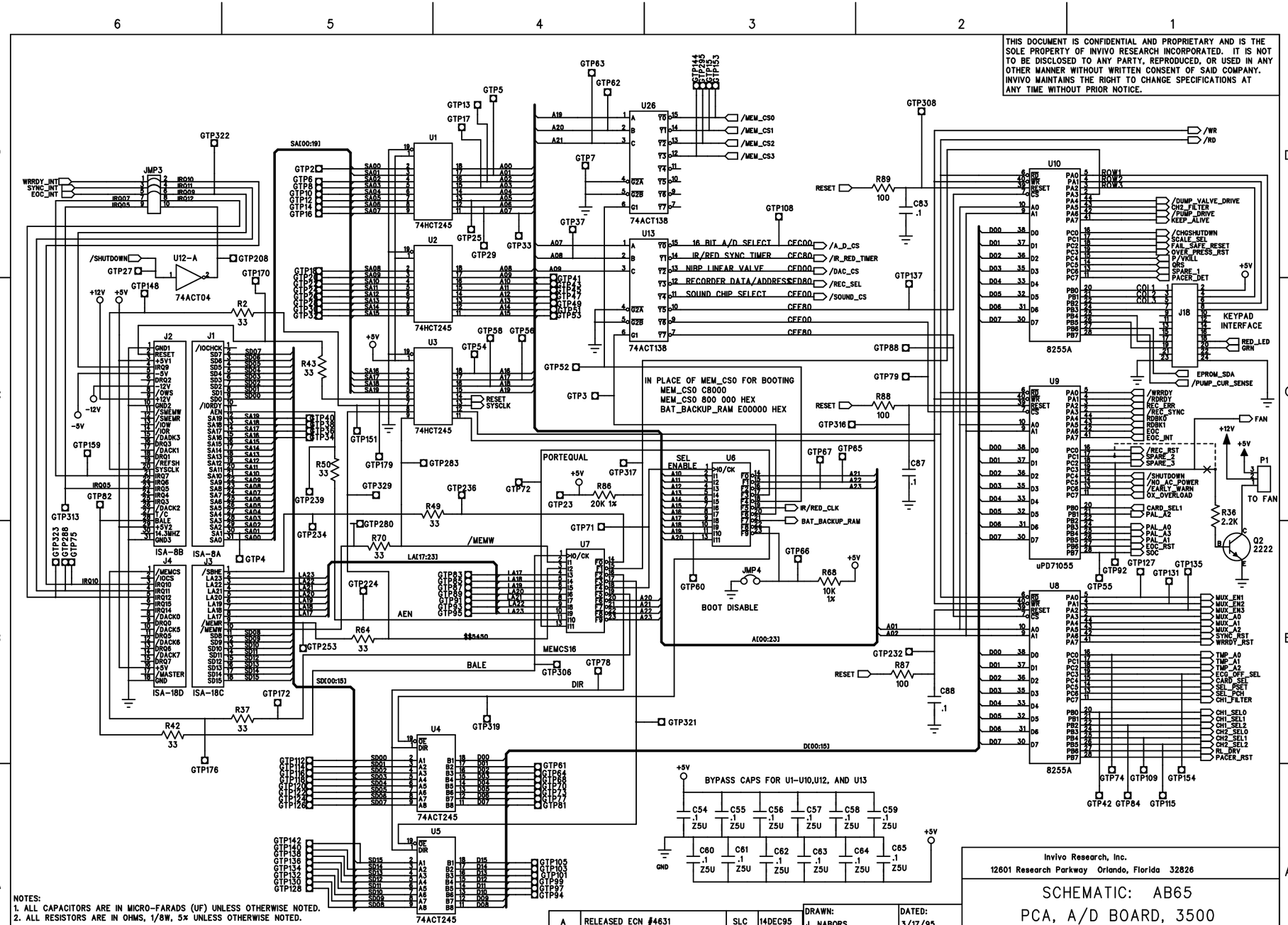

NOTES:
1. ALL CAPACITORS ARE IN MICRO-FARADS (UF) UNLESS OTHERWISE NOTED.
2. ALL RESISTORS ARE IN OHMS, 1/8W, 5% UNLESS OTHERWISE NOTED.

REVISION HISTORY CONTINUED ON SHEET 2

REV.	DESCRIPTION	BY	DATE	REV.	DESCRIPTION	BY	DATE
D	PER ECN #5039M	JRB	5/17/96	A	RELEASED ECN #4631	SLC	14DEC95
C	PER ECN #4977	SLC	16APR96	02	PROTOTYPE	SLN	15JUN95
B	PER ECN #4881	SLC	18MAR96	01	PROTOTYPE	SLN	25APR95
				0	PROTOTYPE	SLN	18JAN95

DRAWN: J. NABORS	DATED: 3/17/95
CHECKED:	DATED:
QUALITY CONTROL:	DATED:
RELEASED:	DATED:

Invivo Research, Inc.
12601 Research Parkway Orlando, Florida 32826

SCHEMATIC: AB65
PCA, A/D BOARD, 3500

PCB	SIZE:	DRAWING NO:	REV:
B142	C	185C183	T

SCALE: NONE

SHEET: 1 OF 5

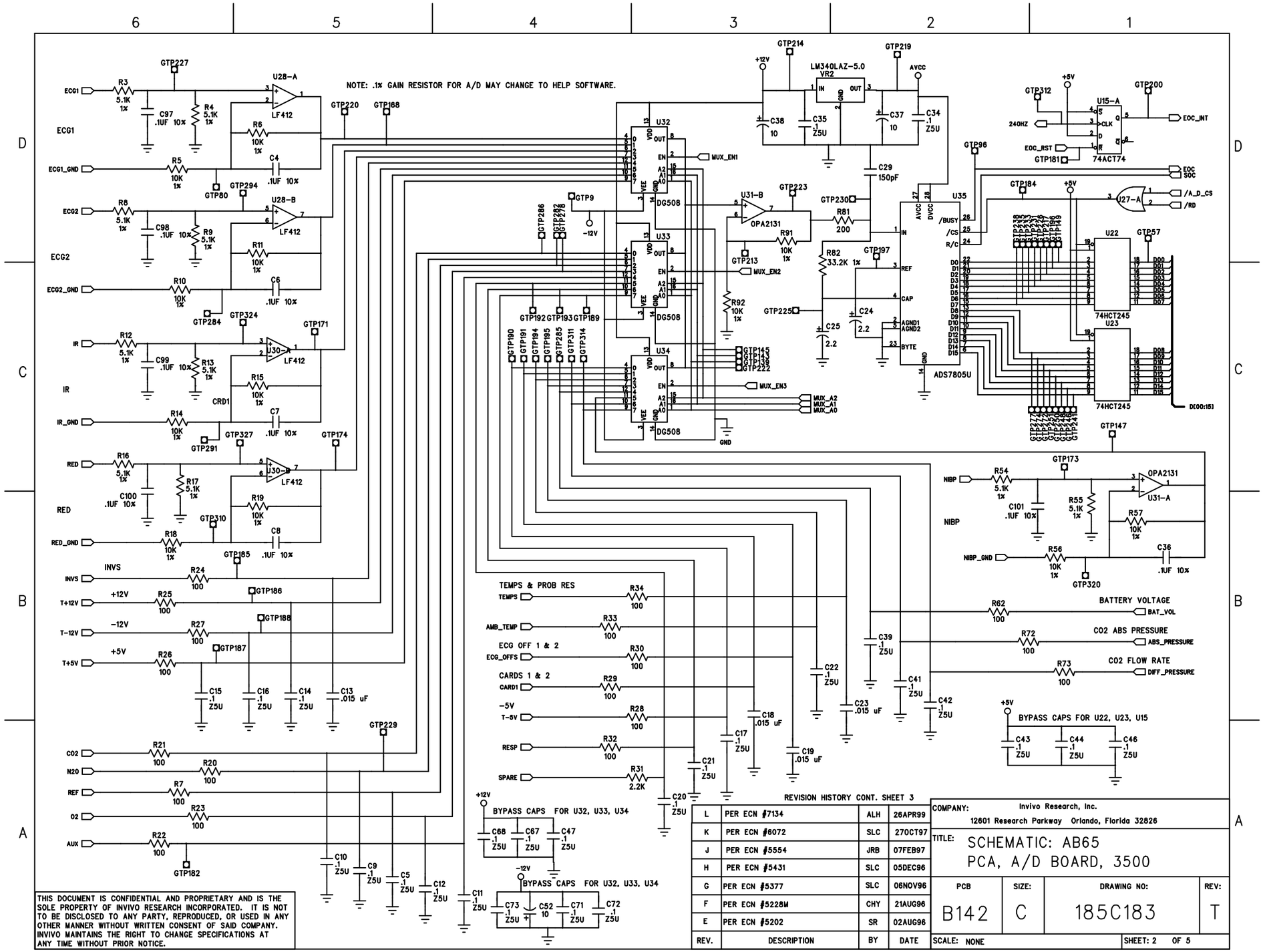

REVISION HISTORY CONT. SHEET 3

REV.	DESCRIPTION	BY	DATE
L	PER ECN #7134	ALH	26APR99
K	PER ECN #6072	SLC	27OCT97
J	PER ECN #5554	JRB	07FEB97
H	PER ECN #5431	SLC	05DEC96
G	PER ECN #5377	SLC	06NOV96
F	PER ECN #5228M	CHY	21AUG96
E	PER ECN #5202	SR	02AUG96

COMPANY: Invivo Research, Inc.
12601 Research Parkway Orlando, Florida 32826

TITLE: SCHEMATIC: AB65
PCA, A/D BOARD, 3500

PCB	SIZE:	DRAWING NO:	REV:
B142	C	185C183	T

SCALE: NONE SHEET: 2 OF 5

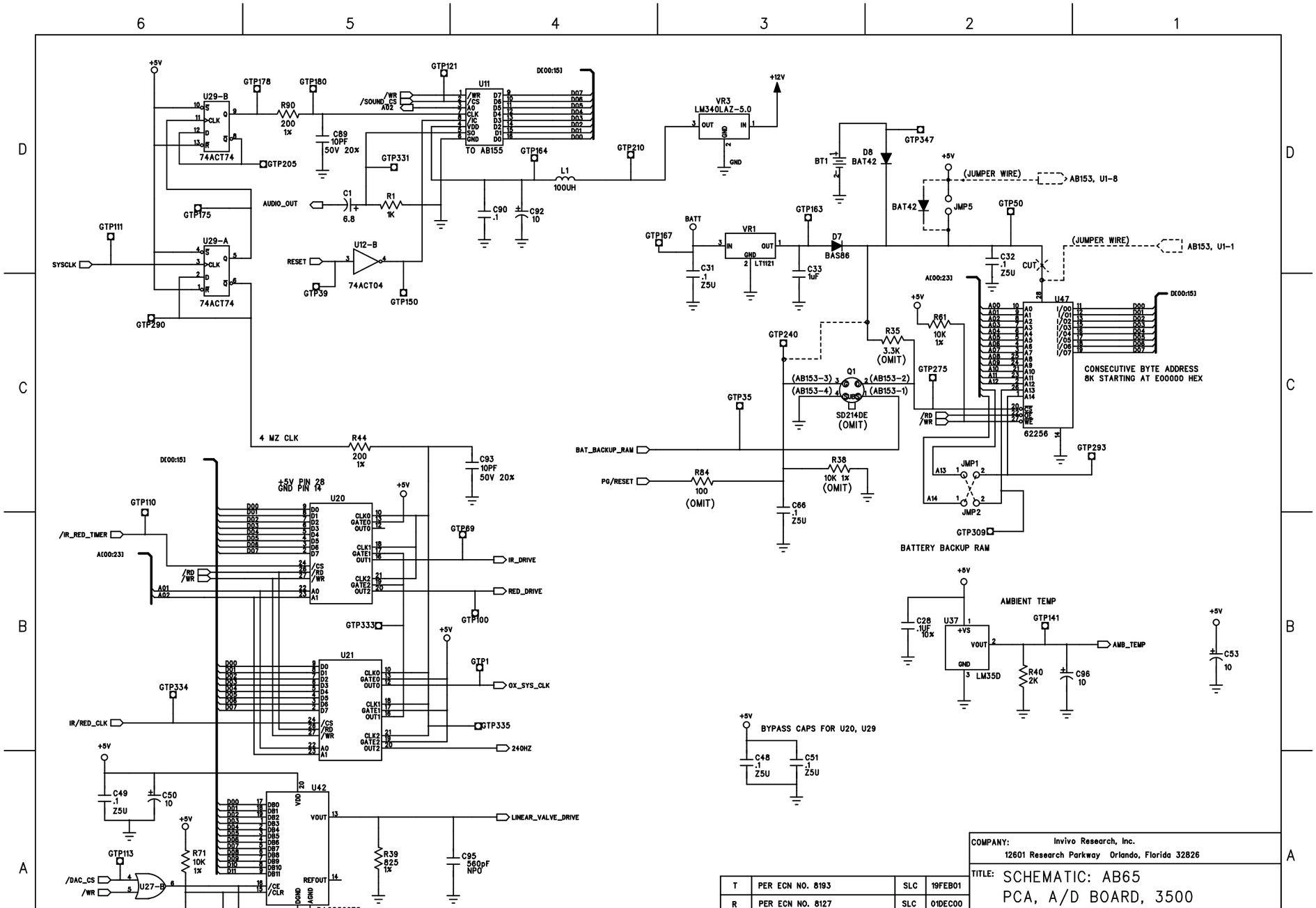

THIS DOCUMENT IS CONFIDENTIAL AND PROPRIETARY AND IS THE SOLE PROPERTY OF INVIVO RESEARCH INCORPORATED. IT IS NOT TO BE DISCLOSED TO ANY PARTY, REPRODUCED, OR USED IN ANY OTHER MANNER WITHOUT WRITTEN CONSENT OF SAID COMPANY. INVIVO MAINTAINS THE RIGHT TO CHANGE SPECIFICATIONS AT ANY TIME WITHOUT PRIOR NOTICE.

REV.	DESCRIPTION	BY	DATE
T	PER ECN NO. 8193	SLC	19FEB01
R	PER ECN NO. 8127	SLC	01DEC00
P	PER ECN NO. 7870	SLC	20JUL00
N	PER ECN NO. 7824	ALH	21JUN00
M	PER ECN NO. 7376	SLC	05OCT99

COMPANY: Invivo Research, Inc.
12601 Research Parkway Orlando, Florida 32826

TITLE: SCHEMATIC: AB65
PCA, A/D BOARD, 3500

PCB	SIZE:	DRAWING NO:	REV:
B142	C	185C183	T

SCALE: NONE SHEET: 3 OF 5

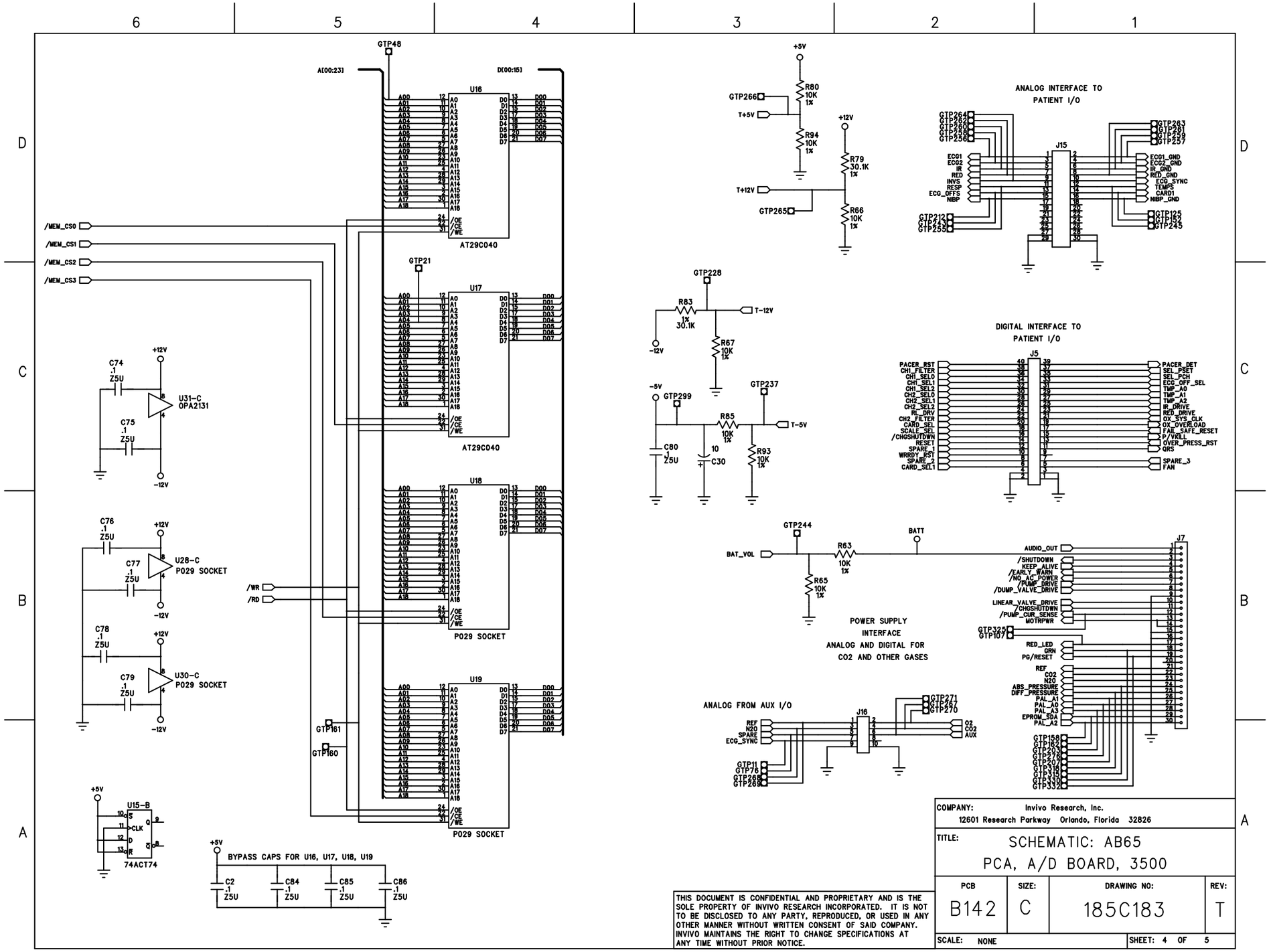

THIS DOCUMENT IS CONFIDENTIAL AND PROPRIETARY AND IS THE SOLE PROPERTY OF INVIVO RESEARCH INCORPORATED. IT IS NOT TO BE DISCLOSED TO ANY PARTY, REPRODUCED, OR USED IN ANY OTHER MANNER WITHOUT WRITTEN CONSENT OF SAID COMPANY. INVIVO MAINTAINS THE RIGHT TO CHANGE SPECIFICATIONS AT ANY TIME WITHOUT PRIOR NOTICE.

COMPANY: Invivo Research, Inc.
12601 Research Parkway Orlando, Florida 32826

TITLE: SCHEMATIC: AB65
PCA, A/D BOARD, 3500

PCB	SIZE:	DRAWING NO:	REV:
B142	C	185C183	T

SCALE: NONE

SHEET: 4 OF 5

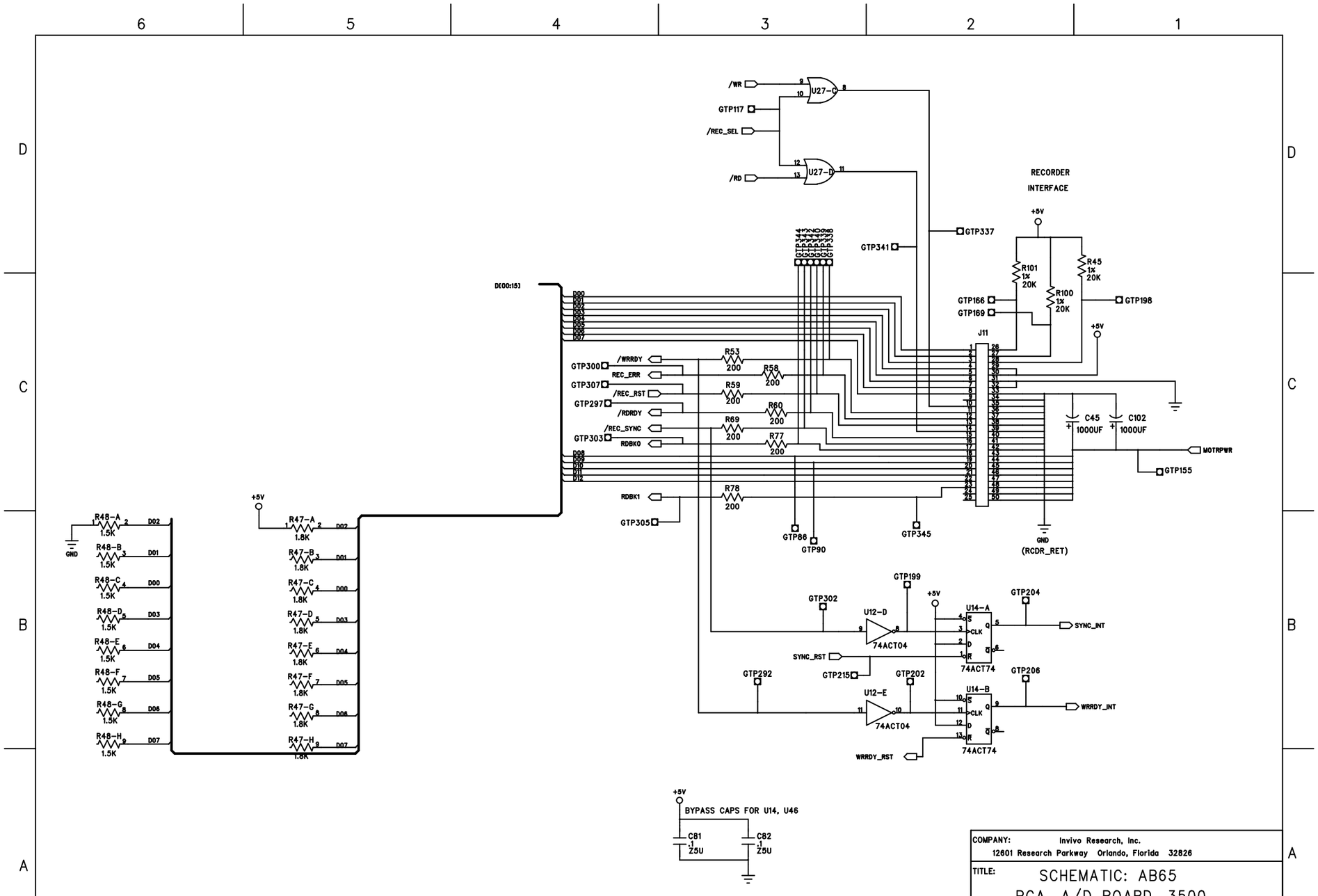

THIS DOCUMENT IS CONFIDENTIAL AND PROPRIETARY AND IS THE SOLE PROPERTY OF INVIVO RESEARCH INCORPORATED. IT IS NOT TO BE DISCLOSED TO ANY PARTY, REPRODUCED, OR USED IN ANY OTHER MANNER WITHOUT WRITTEN CONSENT OF SAID COMPANY. INVIVO MAINTAINS THE RIGHT TO CHANGE SPECIFICATIONS AT ANY TIME WITHOUT PRIOR NOTICE.

COMPANY: Invivo Research, Inc.
12601 Research Parkway Orlando, Florida 32826

TITLE: SCHEMATIC: AB65
PCA, A/D BOARD, 3500

PCB	SIZE:	DRAWING NO:	REV:
B142	C	185C183	T

SCALE: NONE SHEET: 5 OF 5

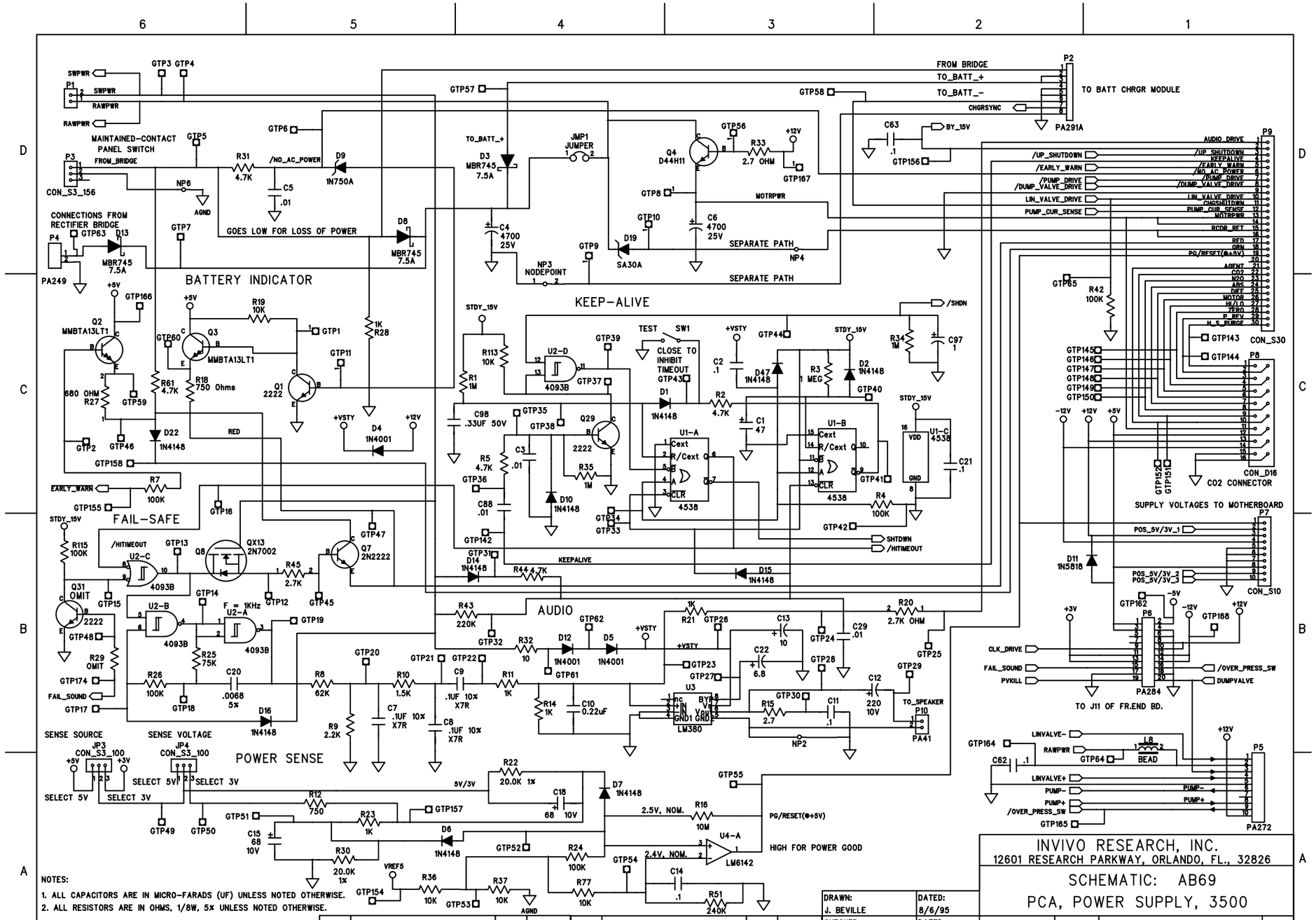

NOTES:

1. ALL CAPACITORS ARE IN MICRO-FARADS (UF) UNLESS NOTED OTHERWISE.
2. ALL RESISTORS ARE IN OHMS, 1/8W, 5% UNLESS NOTED OTHERWISE.

THIS DOCUMENT IS CONFIDENTIAL AND PROPRIETARY AND IS THE SOLE PROPERTY OF INVIVO RESEARCH INCORPORATED. IT IS NOT TO BE DISCLOSED TO ANY PARTY, REPRODUCED, OR USED IN ANY OTHER MANNER WITHOUT WRITTEN CONSENT OF SAID COMPANY. INVIVO MAINTAINS THE RIGHT TO CHANGE SPECIFICATIONS AT ANY TIME WITHOUT PRIOR NOTICE.

REV.	DESCRIPTION	BY	DATE	REV.	DESCRIPTION	BY	DATE
	CONTINUED ON SHEET 2			02	PROTOTYPE	SLN	15JUL95
B	PER ECN #4882	SLC	13MAR96	01	PROTOTYPE	SLN	15MAR95
A	RELEASED PER ECN #4631	SLC	09NOV95	0	PROTOTYPE	SLN	10JAN95

DRAWN: J. BEVILLE	DATED: 8/6/95
CHECKED:	DATED:
QUALITY CONTROL:	DATED:
RELEASED:	DATED:

INVIVO RESEARCH, INC.
12601 RESEARCH PARKWAY, ORLANDO, FL., 32826

SCHEMATIC: AB69
PCA, POWER SUPPLY, 3500

PCB:	SIZE:	DRAWING NO:	REV:
B145	C	185C187	U

SCALE: NONE | SHEET: 1 OF 3

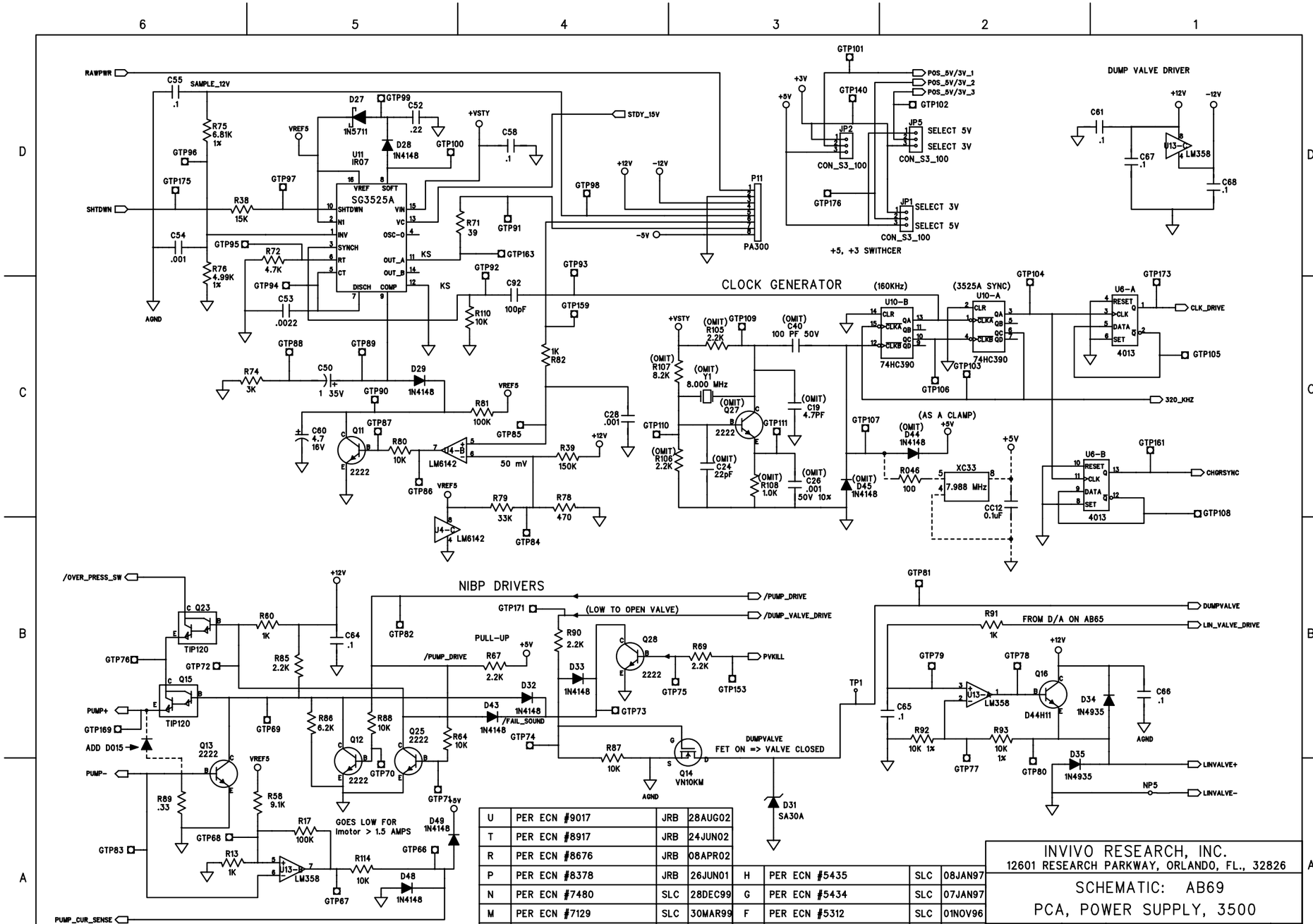

REV.	DESCRIPTION	BY	DATE	REV.	DESCRIPTION	BY	DATE
U	PER ECN #9017	JRB	28AUG02				
T	PER ECN #8917	JRB	24JUN02				
R	PER ECN #8676	JRB	08APR02				
P	PER ECN #8378	JRB	26JUN01	H	PER ECN #5435	SLC	08JAN97
N	PER ECN #7480	SLC	28DEC99	G	PER ECN #5434	SLC	07JAN97
M	PER ECN #7129	SLC	30MAR99	F	PER ECN #5312	SLC	01NOV96
L	PER ECN #6215	SLC	25NOV97	E	PER ECN #5199	RHK	02AUG96
K	PER ECN #6213M	SLC	25NOV97	D	PER ECN #5156	SLC	15JUL96
J	PER ECN #5673M	JRB	10APR97	C	PER ECN #4854	JRB	4/16/96

THIS DOCUMENT IS CONFIDENTIAL AND PROPRIETARY AND IS THE SOLE PROPERTY OF INVIVO RESEARCH INCORPORATED. IT IS NOT TO BE DISCLOSED TO ANY PARTY, REPRODUCED, OR USED IN ANY OTHER MANNER WITHOUT WRITTEN CONSENT OF SAID COMPANY. INVIVO MAINTAINS THE RIGHT TO CHANGE SPECIFICATIONS AT ANY TIME WITHOUT PRIOR NOTICE.

INVIVO RESEARCH, INC.
12601 RESEARCH PARKWAY, ORLANDO, FL. 32826

SCHEMATIC: AB69
PCA, POWER SUPPLY, 3500

PCB:	SIZE:	DRAWING NO:	REV:
B145	C	185C187	U

SCALE: NONE | SHEET: 2 of 3

THIS DOCUMENT IS CONFIDENTIAL AND PROPRIETARY AND IS THE SOLE PROPERTY OF INVIVO RESEARCH INCORPORATED. IT IS NOT TO BE DISCLOSED TO ANY PARTY, REPRODUCED, OR USED IN ANY OTHER MANNER WITHOUT WRITTEN CONSENT OF SAID COMPANY. INVIVO MAINTAINS THE RIGHT TO CHANGE SPECIFICATIONS AT ANY TIME WITHOUT PRIOR NOTICE.

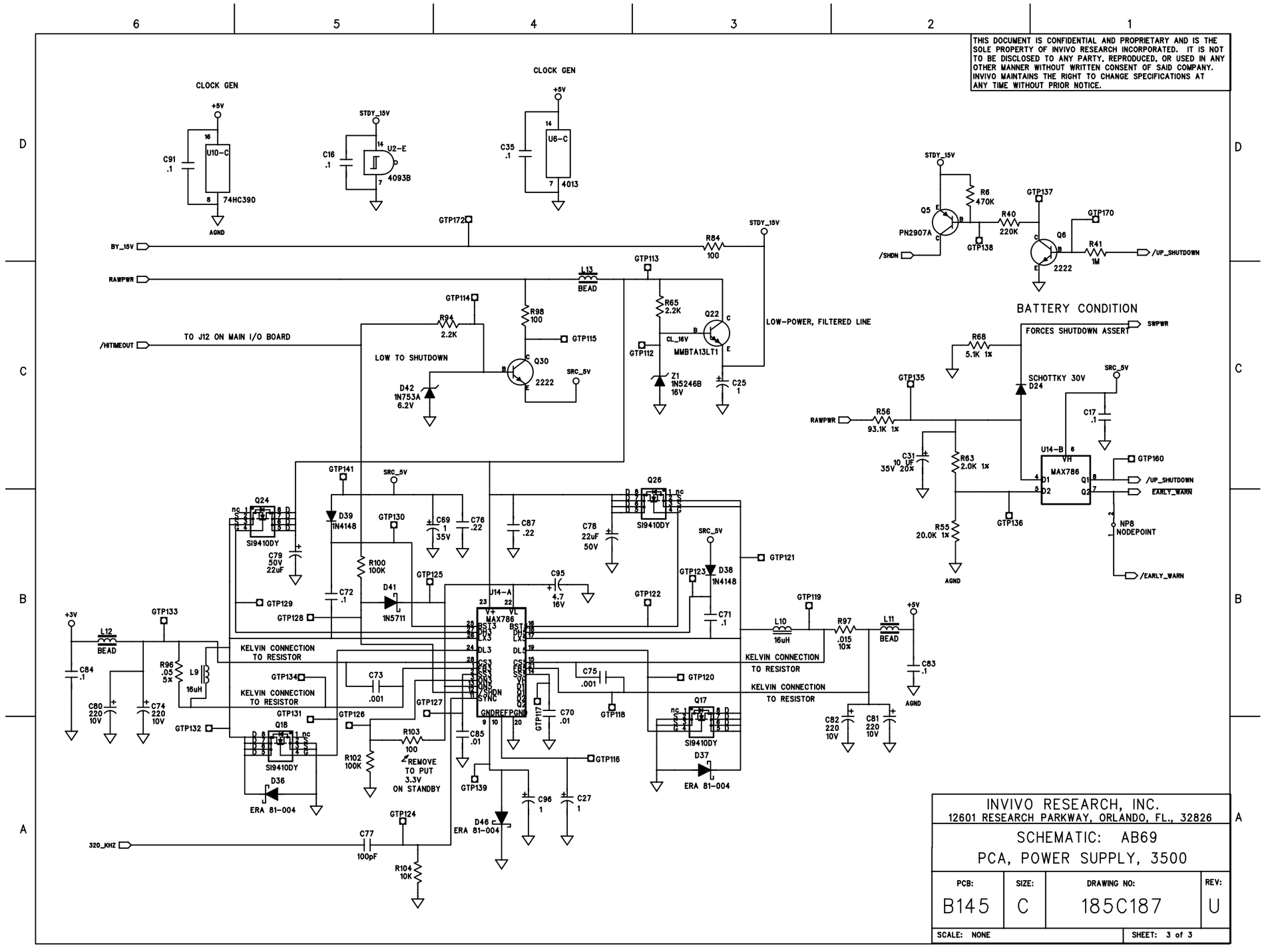

INVIVO RESEARCH, INC. 12601 RESEARCH PARKWAY, ORLANDO, FL., 32826			
SCHEMATIC: AB69 PCA, POWER SUPPLY, 3500			
PCB: B145	SIZE: C	DRAWING NO: 185C187	REV: U
SCALE: NONE		SHEET: 3 of 3	

THIS DOCUMENT IS CONFIDENTIAL AND PROPRIETARY AND IS THE SOLE PROPERTY OF INVIVO RESEARCH INCORPORATED. IT IS NOT TO BE DISCLOSED TO ANY PARTY, REPRODUCED, OR USED IN ANY OTHER MANNER WITHOUT WRITTEN CONSENT OF SAID COMPANY. INVIVO MAINTAINS THE RIGHT TO CHANGE SPECIFICATIONS AT ANY TIME WITHOUT PRIOR NOTICE.

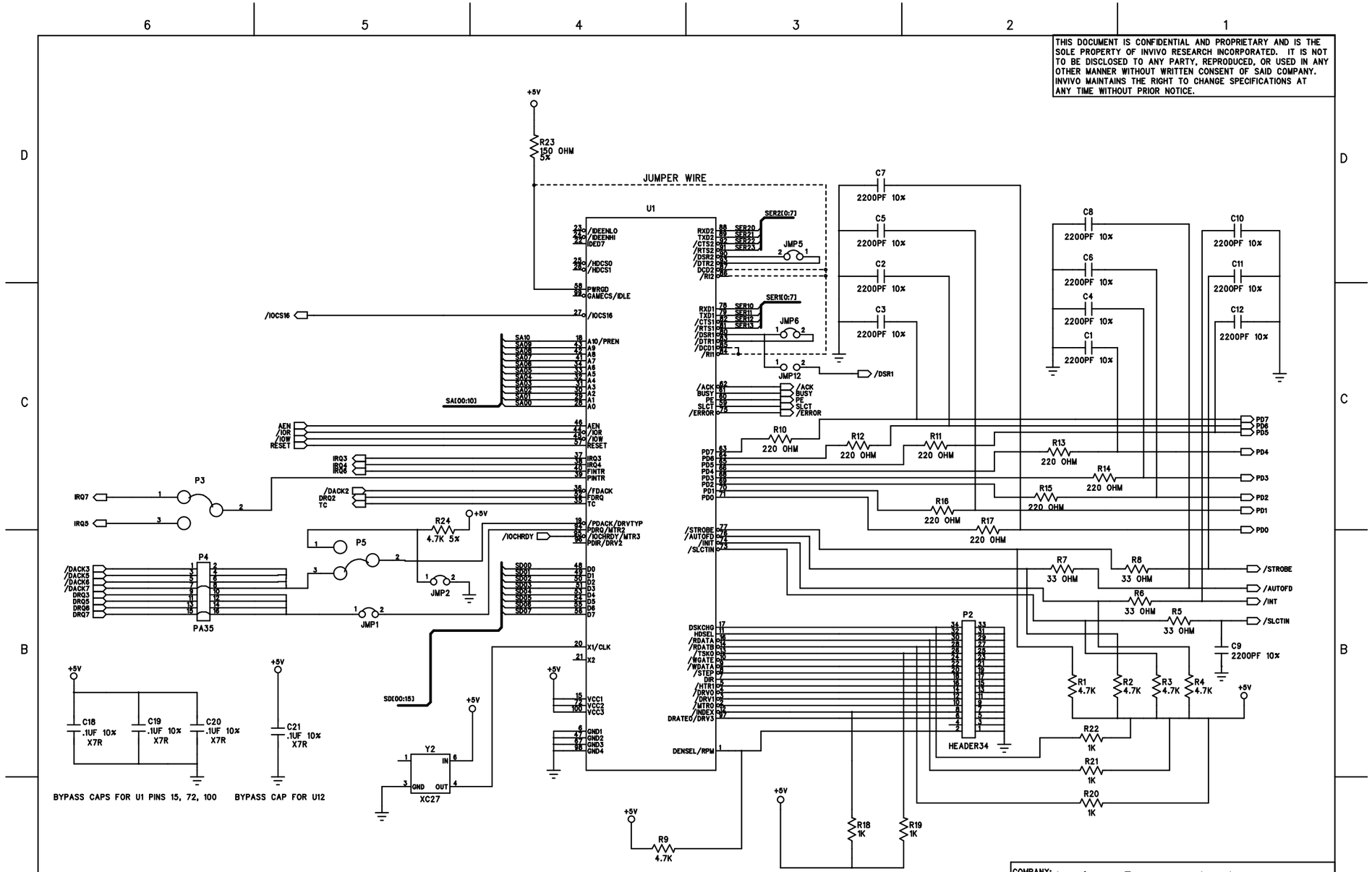

REV.	DESCRIPTION	BY	DATE	REV.	DESCRIPTION	BY	DATE	REV.	DESCRIPTION	BY	DATE
				K	PER ECN # 7860	ALH	19DEC00	E	PER ECN #5415	SLC	25NOV96
				J	PER ECN # 7475	ALH	27DEC99	D	PER ECN #5163M	SLC	15JUL96
				H	PER ECN # 6772	ALH	8AUG98	C	PER ECN #4895	JRB	2/29/96
				G	PER ECN # 5564	SLC	11FEB97	B	PER ECN #4827	SLC	2/23/96
L	PER ECN # 8255	SLC	13MAR01	F	PER ECN # 5455	SLC	19DEC96	A	RELEASED ECN #4695	SLC	18DEC95

DRAWN: J.NABORS	DATED: 10/26/95	
CHECKED:	DATED:	
QUALITY CONTROL:	DATED:	
RELEASED:	DATED:	

COMPANY: Invivo Research, Inc.

TITLE: SCHEMATIC:AB70
PCA, I/O BOARD, 3500

PCB	SIZE:	DRAWING NO:	REV:
B146	C	185C188	L

SCALE: NONE

SHEET: 1 OF 4

THIS DOCUMENT IS CONFIDENTIAL AND PROPRIETARY AND IS THE SOLE PROPERTY OF INVIVO RESEARCH INCORPORATED. IT IS NOT TO BE DISCLOSED TO ANY PARTY, REPRODUCED, OR USED IN ANY OTHER MANNER WITHOUT WRITTEN CONSENT OF SAID COMPANY. INVIVO MAINTAINS THE RIGHT TO CHANGE SPECIFICATIONS AT ANY TIME WITHOUT PRIOR NOTICE.

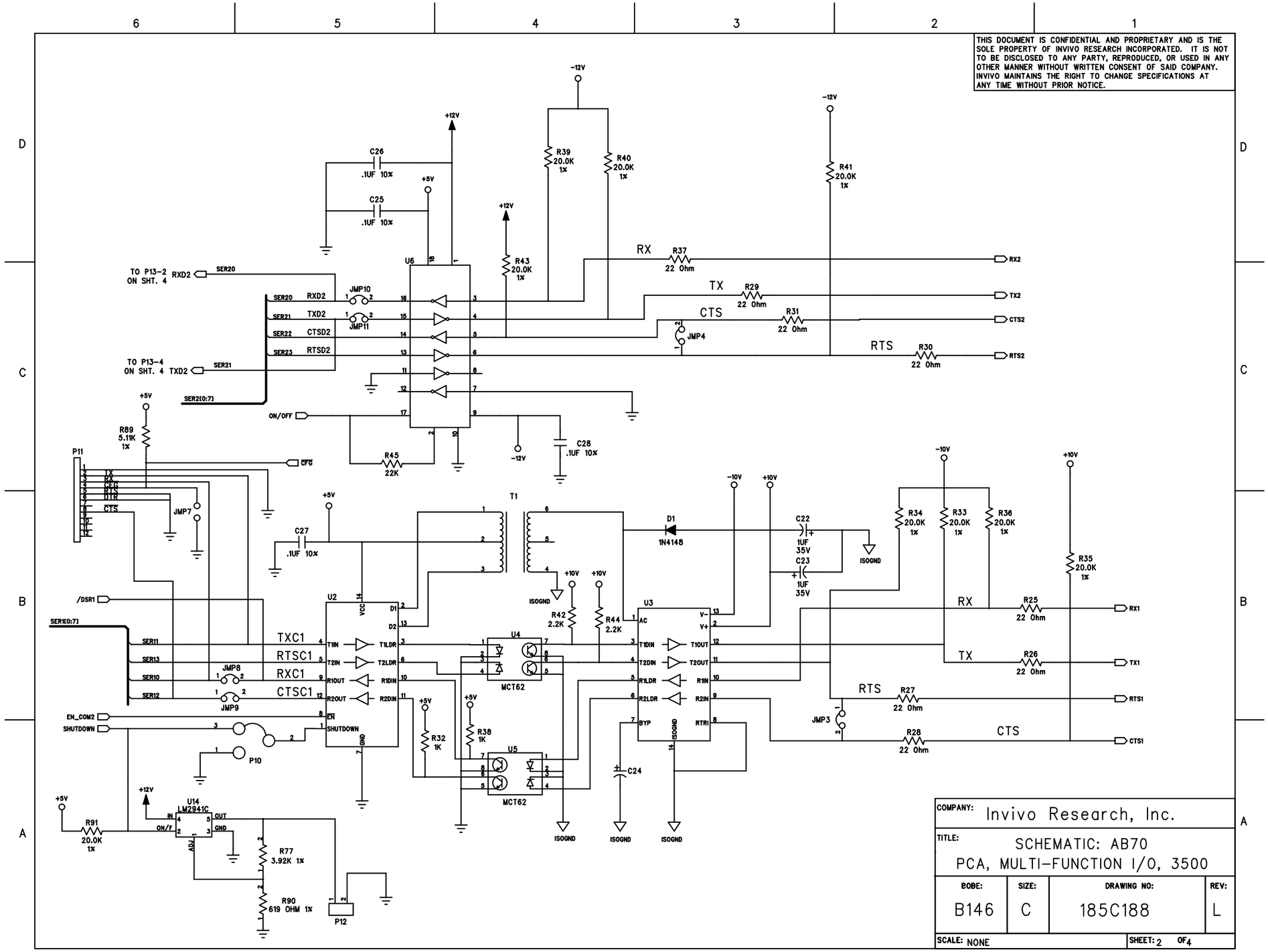

COMPANY: Invivo Research, Inc.			
TITLE: SCHEMATIC: AB70 PCA, MULTI-FUNCTION I/O, 3500			
BOBE: B146	SIZE: C	DRAWING NO: 185C188	REV: L
SCALE: NONE		SHEET: 2 OF 4	

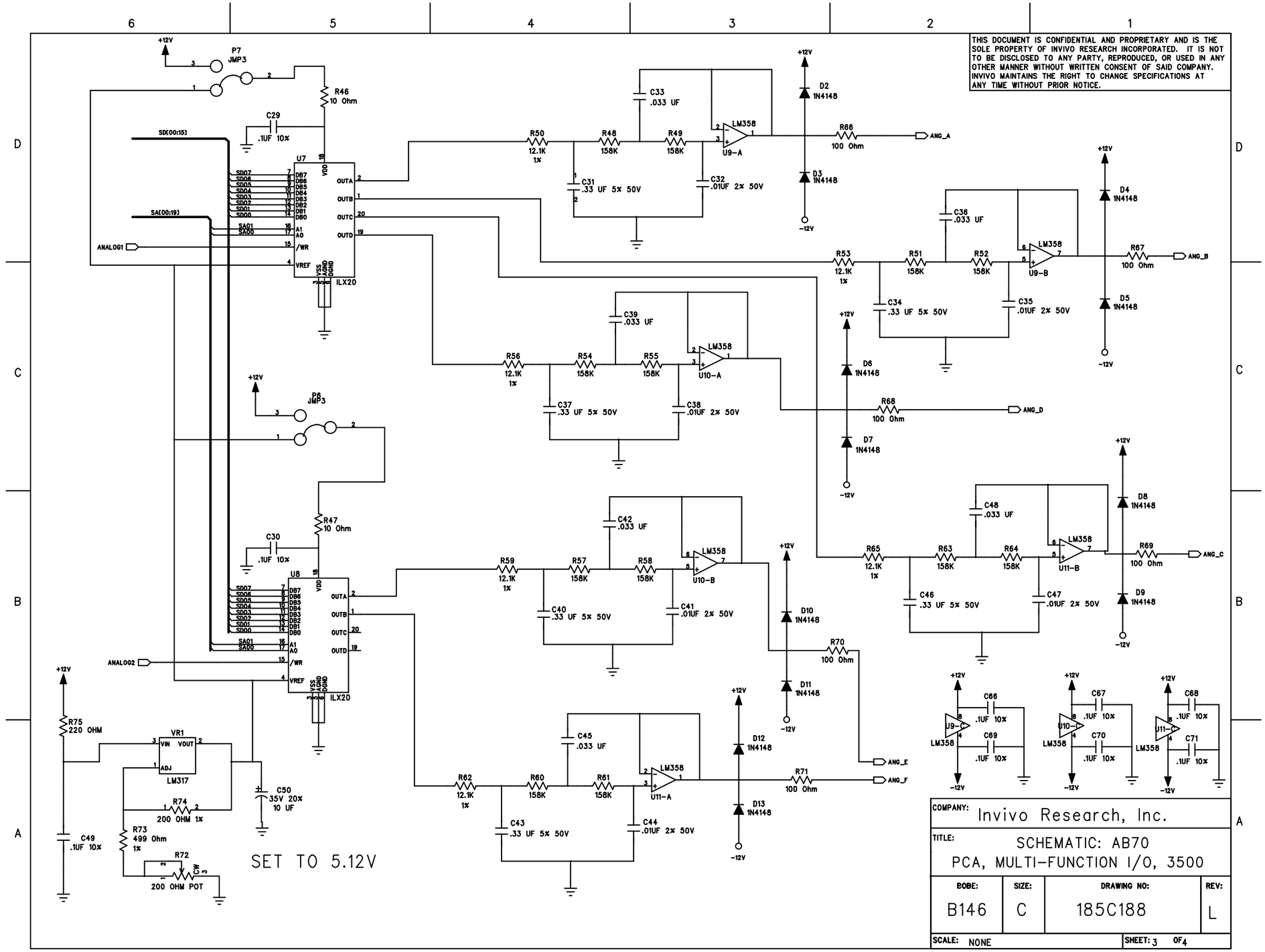
THIS DOCUMENT IS CONFIDENTIAL AND PROPRIETARY AND IS THE SOLE PROPERTY OF INVIVO RESEARCH INCORPORATED. IT IS NOT TO BE DISCLOSED TO ANY PARTY, REPRODUCED, OR USED IN ANY OTHER MANNER WITHOUT WRITTEN CONSENT OF SAID COMPANY. INVIVO MAINTAINS THE RIGHT TO CHANGE SPECIFICATIONS AT ANY TIME WITHOUT PRIOR NOTICE.
SET TO 5.12V
COMPANY: Invivo Research, Inc.
TITLE: SCHEMATIC: AB70
PCA, MULTI-FUNCTION I/O, 3500
BOBE: B146
SIZE: C
DRAWING NO: 185C188
REV: L
SCALE: NONE
SHEET: 3 OF 4

THIS DOCUMENT IS CONFIDENTIAL AND PROPRIETARY AND IS THE SOLE PROPERTY OF INVIVO RESEARCH INCORPORATED. IT IS NOT TO BE DISCLOSED TO ANY PARTY, REPRODUCED, OR USED IN ANY OTHER MANNER WITHOUT WRITTEN CONSENT OF SAID COMPANY. INVIVO MAINTAINS THE RIGHT TO CHANGE SPECIFICATIONS AT ANY TIME WITHOUT PRIOR NOTICE.

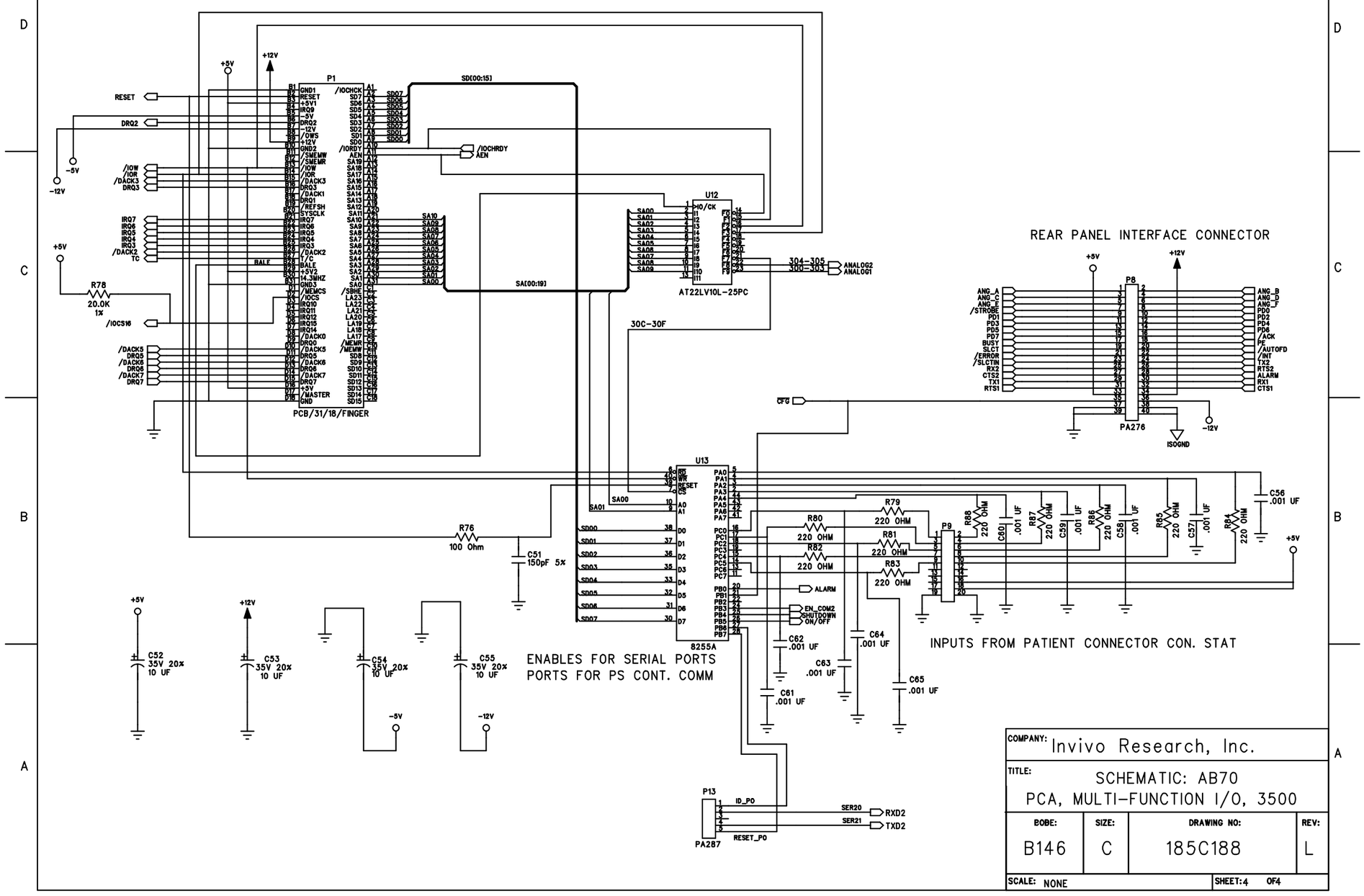

COMPANY:	Invivo Research, Inc.		
TITLE:	SCHEMATIC: AB70 PCA, MULTI-FUNCTION I/O, 3500		
BOBE: B146	SIZE: C	DRAWING NO: 185C188	REV: L
SCALE: NONE		SHEET: 4 OF 4	

THIS DOCUMENT IS CONFIDENTIAL AND PROPRIETARY AND IS THE SOLE PROPERTY OF INVIVO RESEARCH INCORPORATED. IT IS NOT TO BE DISCLOSED TO ANY PARTY, REPRODUCED, OR USED IN ANY OTHER MANNER WITHOUT WRITTEN CONSENT OF SAID COMPANY. INVIVO MAINTAINS THE RIGHT TO CHANGE SPECIFICATIONS AT ANY TIME WITHOUT PRIOR NOTICE.

BATTERY CHARGER

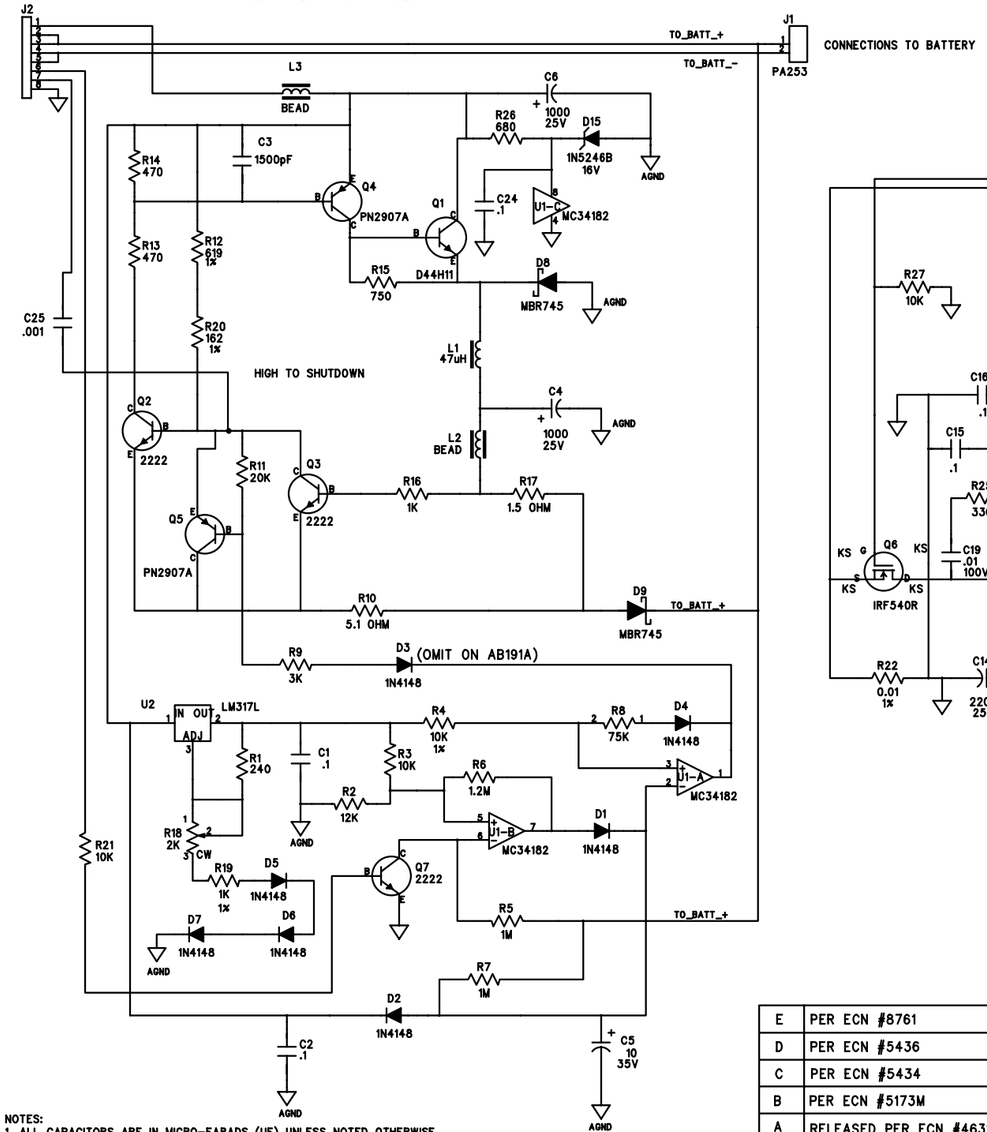

NOTES:
1. ALL CAPACITORS ARE IN MICRO-FARADS (UF) UNLESS NOTED OTHERWISE.
2. ALL RESISTORS ARE IN OHMS, 1/8W, 5% UNLESS NOTED OTHERWISE.

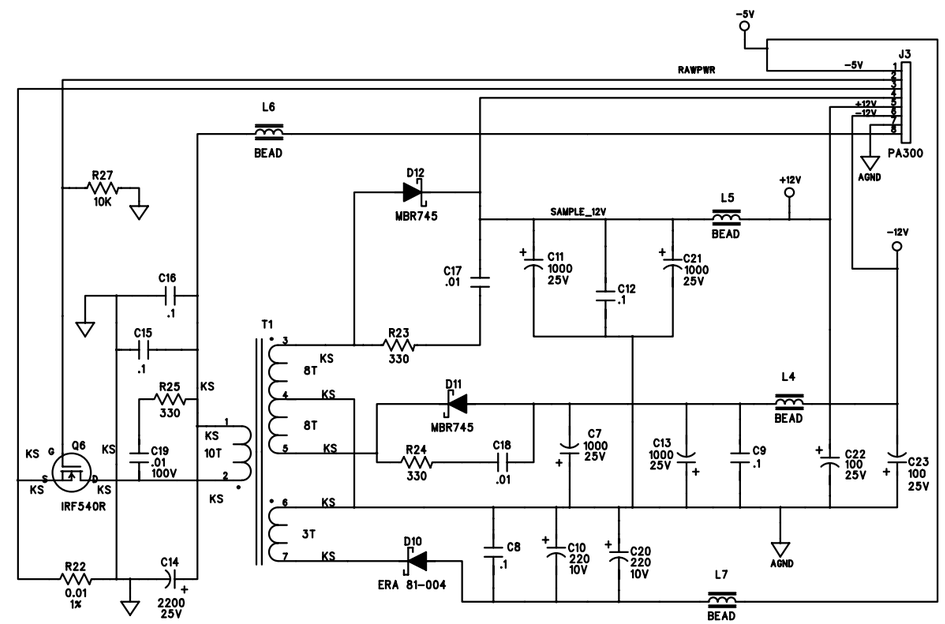

+12, -12, -5 SWITCHER

REV.	DESCRIPTION	BY	DATE
E	PER ECN #8761	SLC	05APR02
D	PER ECN #5436	SLC	09JAN97
C	PER ECN #5434	SLC	07JAN97
B	PER ECN #5173M	SLC	19JUL96
A	RELEASED PER ECN #4631	SLC	15DEC95
01	PROTOTYPE	SLN	15JUL95
0	PROTOTYPE	SLN	10MAR95

DRAWN:	S. NEW	DATED:	2/21/95
CHECKED:		DATED:	
QUALITY CONTROL:		DATED:	
RELEASED:		DATED:	

COMPANY: INVIVO RESEARCH, INC.
12601 RESEARCH PARKWAY, ORLANDO, FL., 32826

TITLE: SCHEMATIC: AB69A/AB191A PCA, PWR SWITCHER/BATT. CHRGR, 3500/3550

BARE BD. NO.	SIZE:	DRAWING NO:	REV:
B145A	C	185C197	E

SCALE: NONE SHEET: 1 OF 1

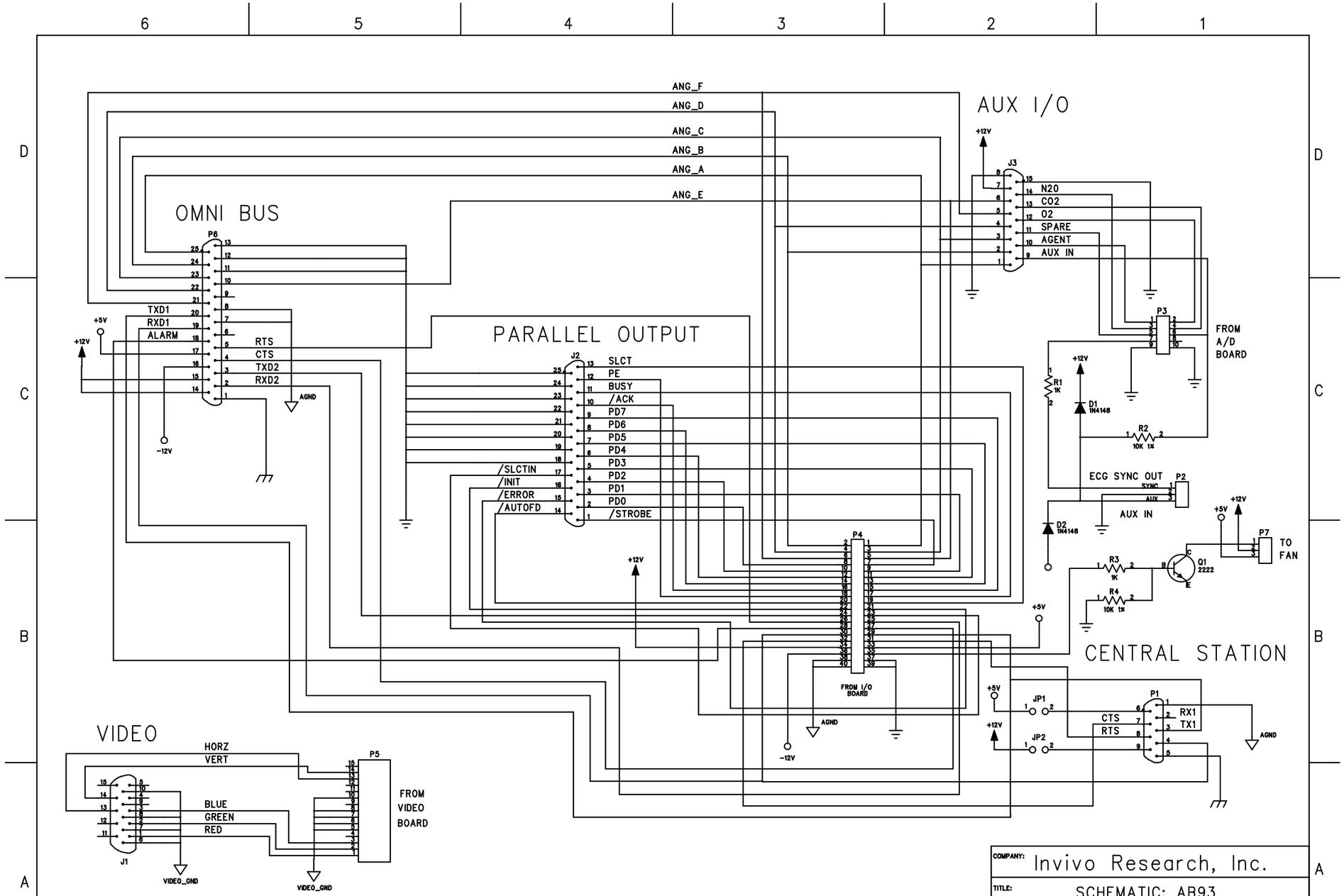

THIS DOCUMENT IS CONFIDENTIAL AND PROPRIETARY AND IS THE SOLE PROPERTY OF INVIVO RESEARCH INCORPORATED. IT IS NOT TO BE DISCLOSED TO ANY PARTY, REPRODUCED, OR USED IN ANY OTHER MANNER WITHOUT WRITTEN CONSENT OF SAID COMPANY. INVIVO MAINTAINS THE RIGHT TO CHANGE SPECIFICATIONS AT ANY TIME WITHOUT PRIOR NOTICE.

REV.	DESCRIPTION	BY	DATE
D	PER ECN # 5414	SLC	22NOV96
C	PER ECN # 5190	SR	5AUG96
B	PER ECN # 4932	JRB	4/9/96
A	RELEASED, ECN #4799	JRB	2/2/96

DRAWN:	J.NABORS	DATED:	10/25/95
CHECKED:		DATED:	
QUALITY CONTROL:		DATED:	
RELEASED:		DATED:	

COMPANY: Invivo Research, Inc.

TITLE: SCHEMATIC: AB93
PCA, REAR PANEL CONNECTORS, 3500

CODE:	SIZE:	DRAWING NO:	REV:
	C	185C202	D

SCALE: NONE

SHEET: 1 OF 1

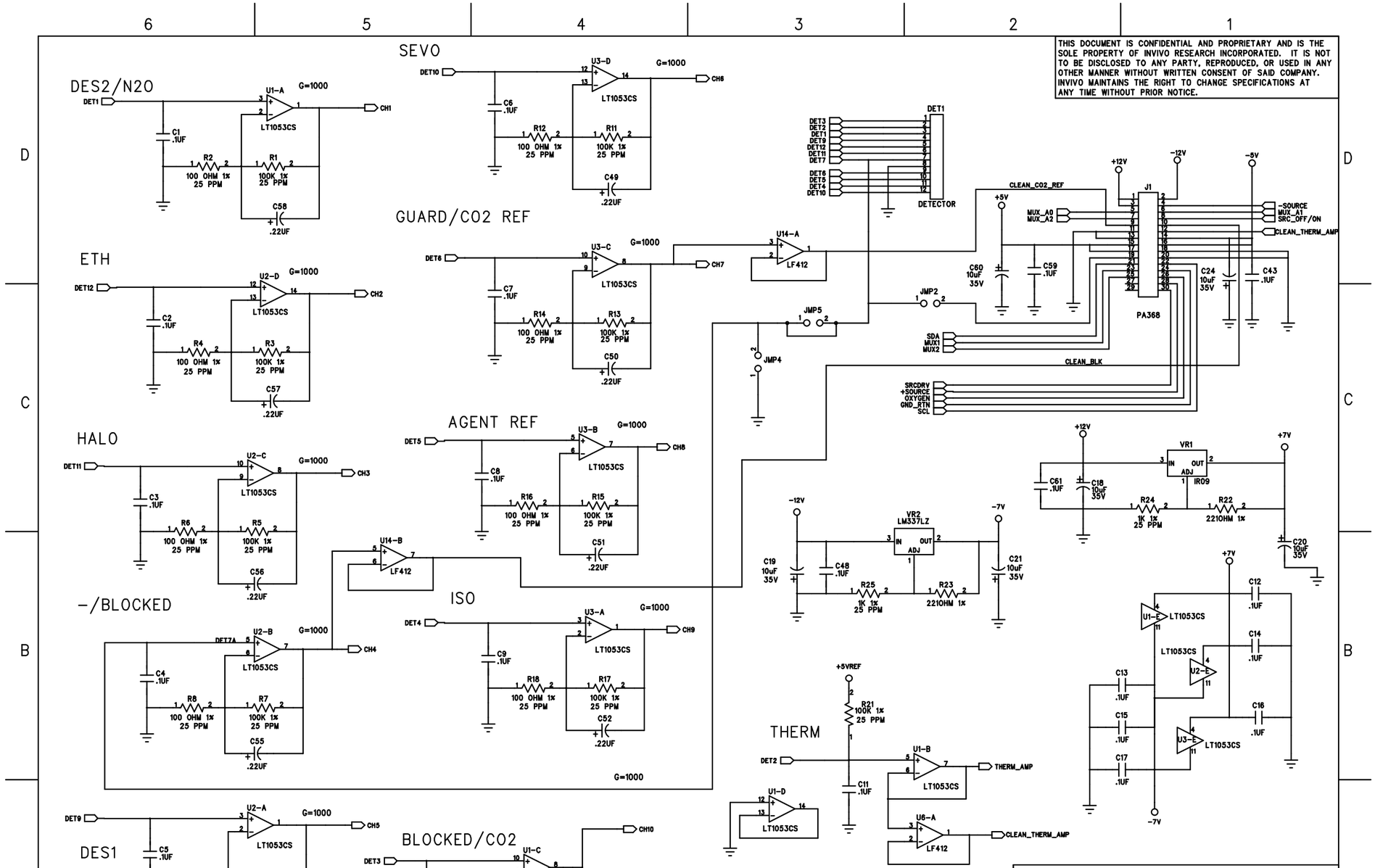

THIS DOCUMENT IS CONFIDENTIAL AND PROPRIETARY AND IS THE SOLE PROPERTY OF INVIVO RESEARCH INCORPORATED. IT IS NOT TO BE DISCLOSED TO ANY PARTY, REPRODUCED, OR USED IN ANY OTHER MANNER WITHOUT WRITTEN CONSENT OF SAID COMPANY. INVIVO MAINTAINS THE RIGHT TO CHANGE SPECIFICATIONS AT ANY TIME WITHOUT PRIOR NOTICE.

REV.	DESCRIPTION	BY	DATE
F	PER ECN NO. 7661	ALH	02MAR00
E	PER ECN NO. 7256	ALH	23JUN99
D	PER ECN NO. 7194M	SLC	25MAY99
C	PER ECN NO. 6851	ALH	14DEC98
B	PER ECN NO. 6806M	SLC	27AUG98
A	RELEASED PER ECN #6618	SLC	13MAY98

DRAWN:	J.NABORS	DATED: 03SEP97
CHECKED:		DATED:
QUALITY CONTROL:		DATED:
RELEASED:		DATED:

COMPANY: Invivo Research, Inc.
12601 Research Parkway Orlando, Florida 32826

TITLE: SCHEMATIC: AB114
PCA, AGENTS I.D.

PCB	SIZE:	DRAWING NO:	REV:
B183	C	185C222	F

SCALE: NONE

SHEET: 1 OF 3

THIS DOCUMENT IS CONFIDENTIAL AND PROPRIETARY AND IS THE SOLE PROPERTY OF INVIVO RESEARCH INCORPORATED. IT IS NOT TO BE DISCLOSED TO ANY PARTY, REPRODUCED, OR USED IN ANY OTHER MANNER WITHOUT WRITTEN CONSENT OF SAID COMPANY. INVIVO MAINTAINS THE RIGHT TO CHANGE SPECIFICATIONS AT ANY TIME WITHOUT PRIOR NOTICE.

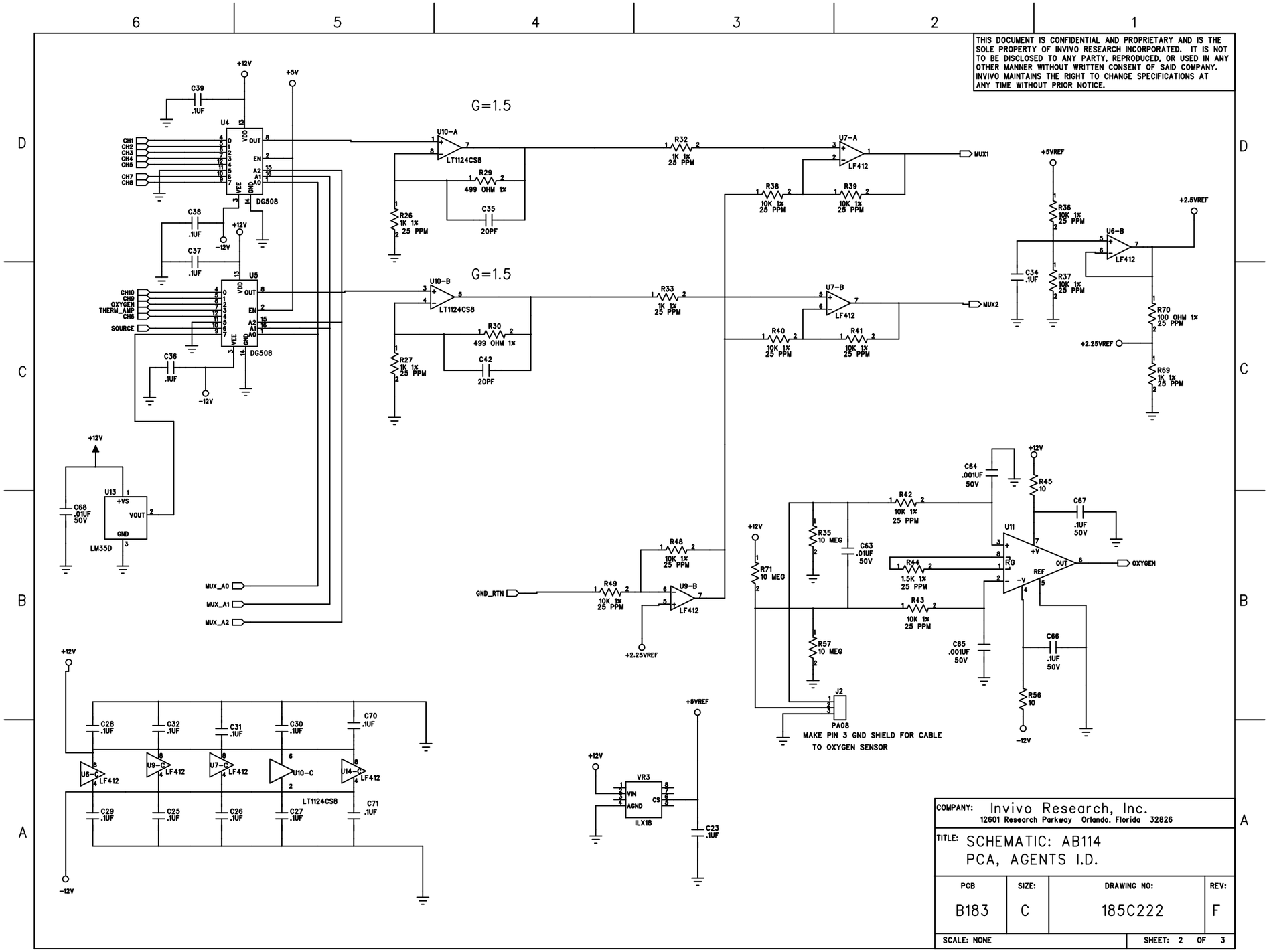

COMPANY:	Invivo Research, Inc. 12601 Research Parkway Orlando, Florida 32826
TITLE:	SCHEMATIC: AB114 PCA, AGENTS I.D.

PCB	SIZE:	DRAWING NO:	REV:
B183	C	185C222	F

SCALE: NONE

SHEET: 2 OF 3

THIS DOCUMENT IS CONFIDENTIAL AND PROPRIETARY AND IS THE SOLE PROPERTY OF INVIVO RESEARCH INCORPORATED. IT IS NOT TO BE DISCLOSED TO ANY PARTY, REPRODUCED, OR USED IN ANY OTHER MANNER WITHOUT WRITTEN CONSENT OF SAID COMPANY. INVIVO MAINTAINS THE RIGHT TO CHANGE SPECIFICATIONS AT ANY TIME WITHOUT PRIOR NOTICE.

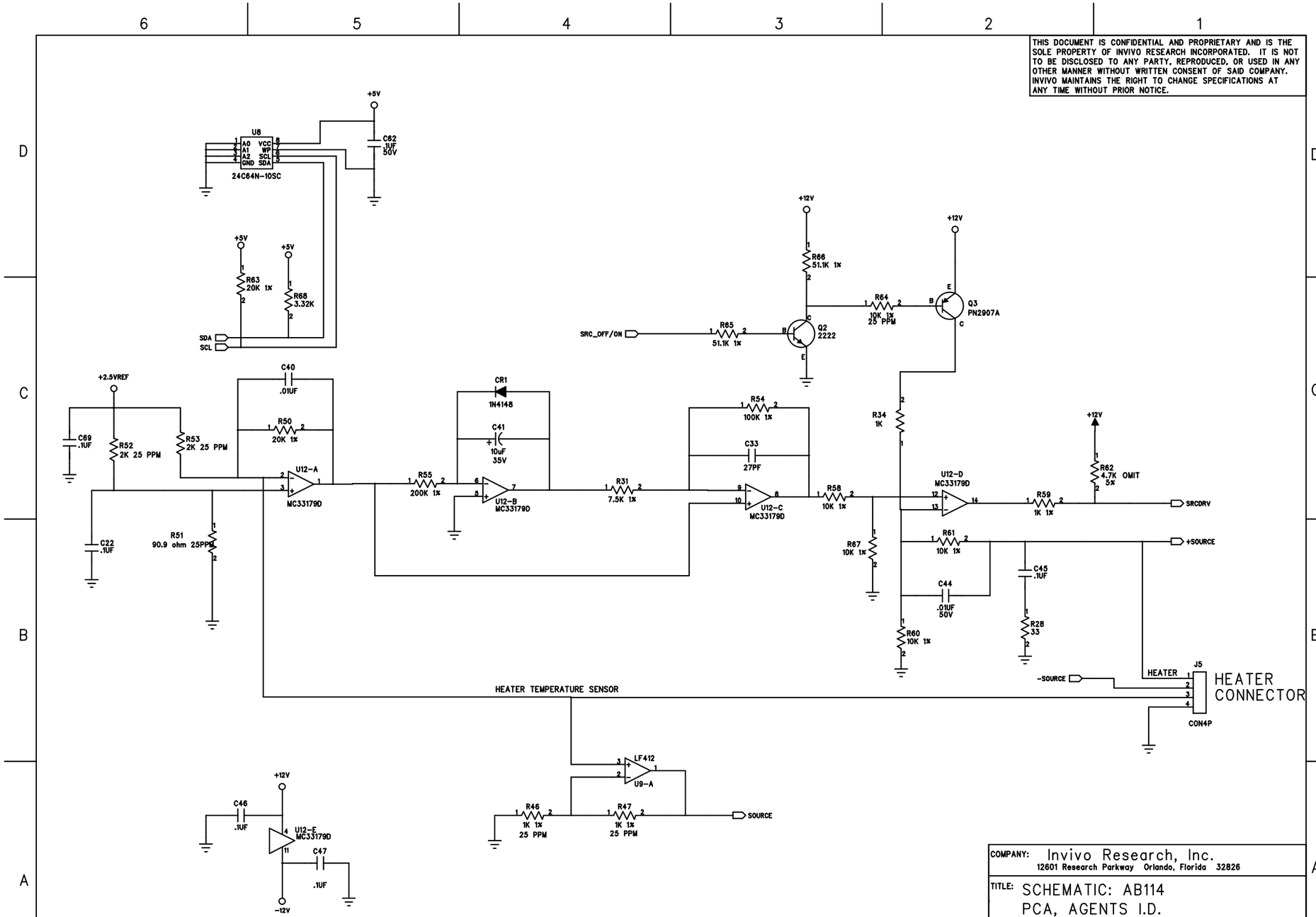

COMPANY: Invivo Research, Inc.
12601 Research Parkway Orlando, Florida 32826

TITLE: SCHEMATIC: AB114
PCA, AGENTS I.D.

PCB	SIZE:	DRAWING NO:	REV:
B183	C	185C222	F

SCALE: NONE | SHEET: 3 OF 3

THIS DOCUMENT IS CONFIDENTIAL AND PROPRIETARY AND IS THE SOLE PROPERTY OF INVIVO RESEARCH INCORPORATED. IT IS NOT TO BE DISCLOSED TO ANY PARTY, REPRODUCED, OR USED IN ANY OTHER MANNER WITHOUT WRITTEN CONSENT OF SAID COMPANY. INVIVO MAINTAINS THE RIGHT TO CHANGE SPECIFICATIONS AT ANY TIME WITHOUT PRIOR NOTICE.

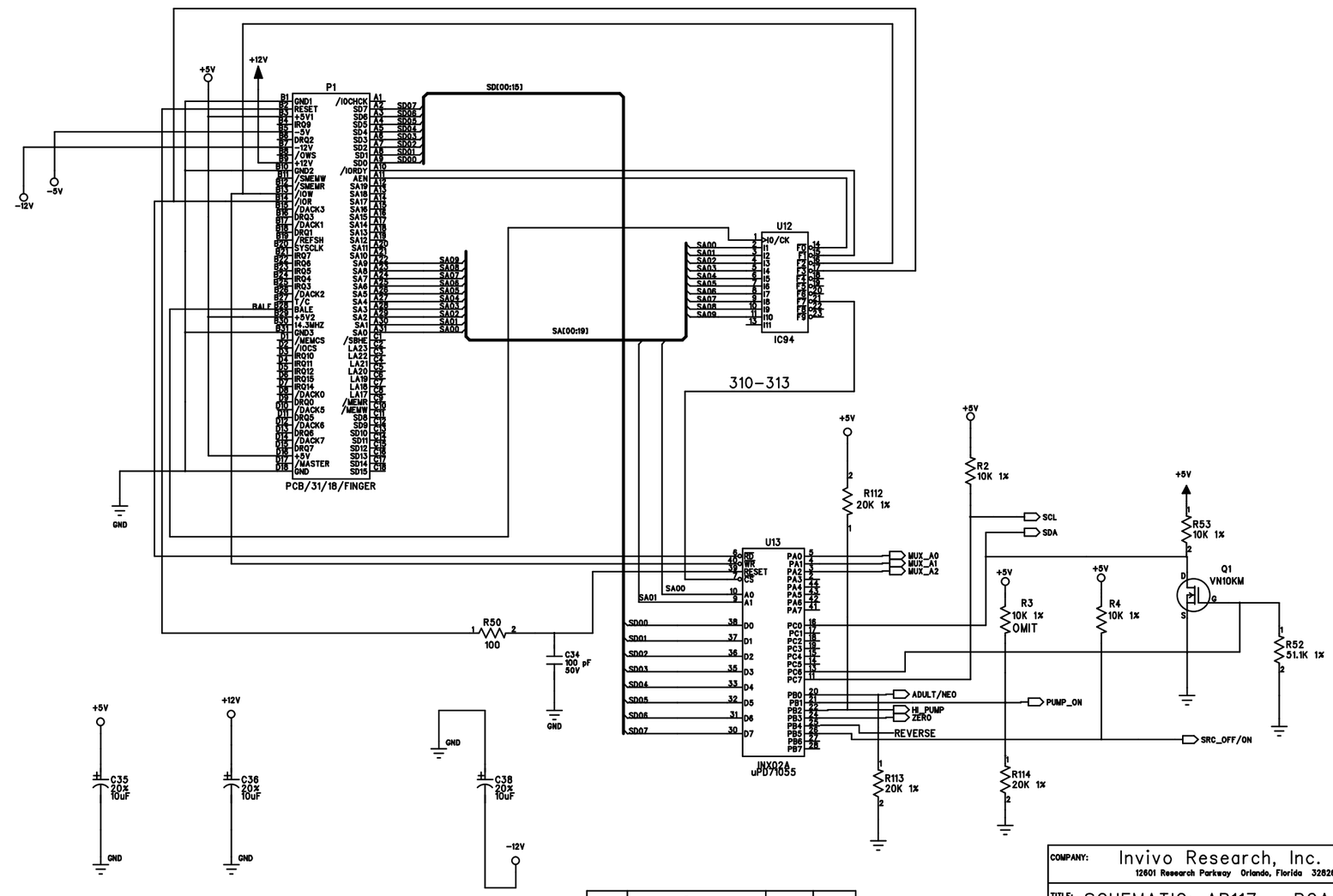

REV.	DESCRIPTION	BY	DATE
E	PER ECN #7474	ALH	27DEC99
D	PER ECN #7191M	SLC	14MAY99
C	PER ECN #6960	ALH	12DEC98
B	PER ECN #6805M	SLC	27AUG98
A	RELEASED,PER ECN #6618	SLC	20MAY98

DRAWN:	J.NABORS	DATED:	20SEPT97
CHECKED:		DATED:	
QUALITY CONTROL:		DATED:	
RELEASED:		DATED:	

COMPANY: Invivo Research, Inc.
12601 Research Parkway Orlando, Florida 32826

TITLE: SCHEMATIC: AB117 PCA, AGENTS PNEUMATICS CONTROLLER,3500

CODE:	SIZE:	DRAWING NO:	REV:
B186	C	185C225	E

SCALE: NONE

SHEET: 1 OF 3

THIS DOCUMENT IS CONFIDENTIAL AND PROPRIETARY AND IS THE SOLE PROPERTY OF INVIVO RESEARCH INCORPORATED. IT IS NOT TO BE DISCLOSED TO ANY PARTY, REPRODUCED, OR USED IN ANY OTHER MANNER WITHOUT WRITTEN CONSENT OF SAID COMPANY. INVIVO MAINTAINS THE RIGHT TO CHANGE SPECIFICATIONS AT ANY TIME WITHOUT PRIOR NOTICE.

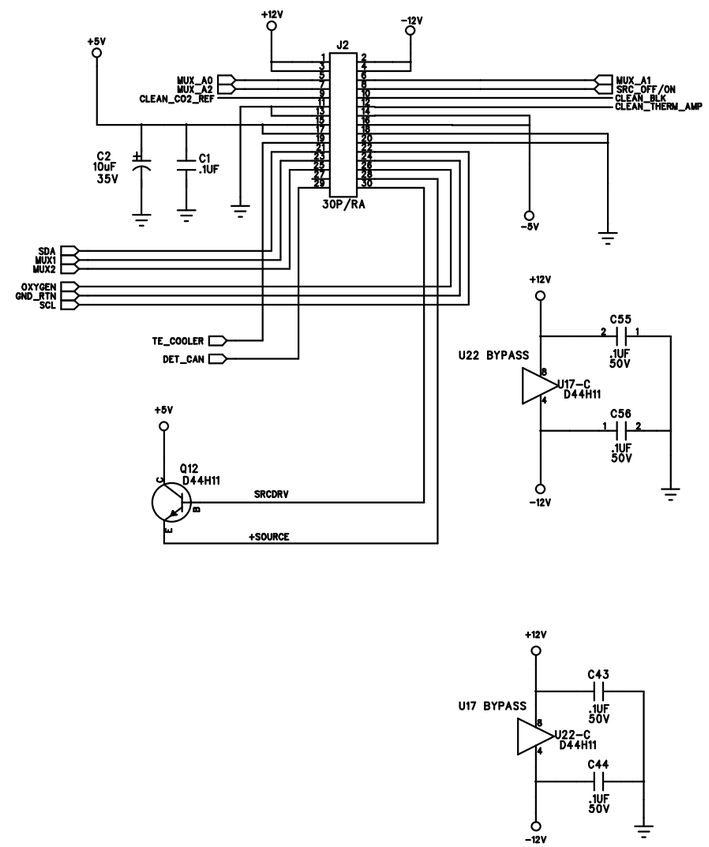

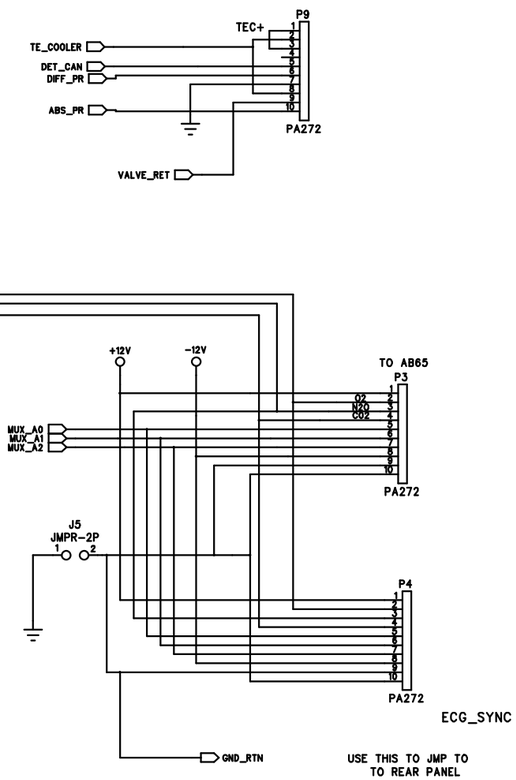

COMPANY: Invivo Research, Inc. 12601 Research Parkway Orlando, Florida 32826			
TITLE: SCHEMATIC: AB117 PCA, AGENTS PNEUMATICS CONTROLLER, 3500			
CODE: B186	SIZE: C	DRAWING NO: 185C225	REV: E
SCALE: NONE		SHEET: 2 OF 3	

THIS DOCUMENT IS CONFIDENTIAL AND PROPRIETARY AND IS THE SOLE PROPERTY OF INVIVO RESEARCH INCORPORATED. IT IS NOT TO BE DISCLOSED TO ANY PARTY, REPRODUCED, OR USED IN ANY OTHER MANNER WITHOUT WRITTEN CONSENT OF SAID COMPANY. INVIVO MAINTAINS THE RIGHT TO CHANGE SPECIFICATIONS AT ANY TIME WITHOUT PRIOR NOTICE.

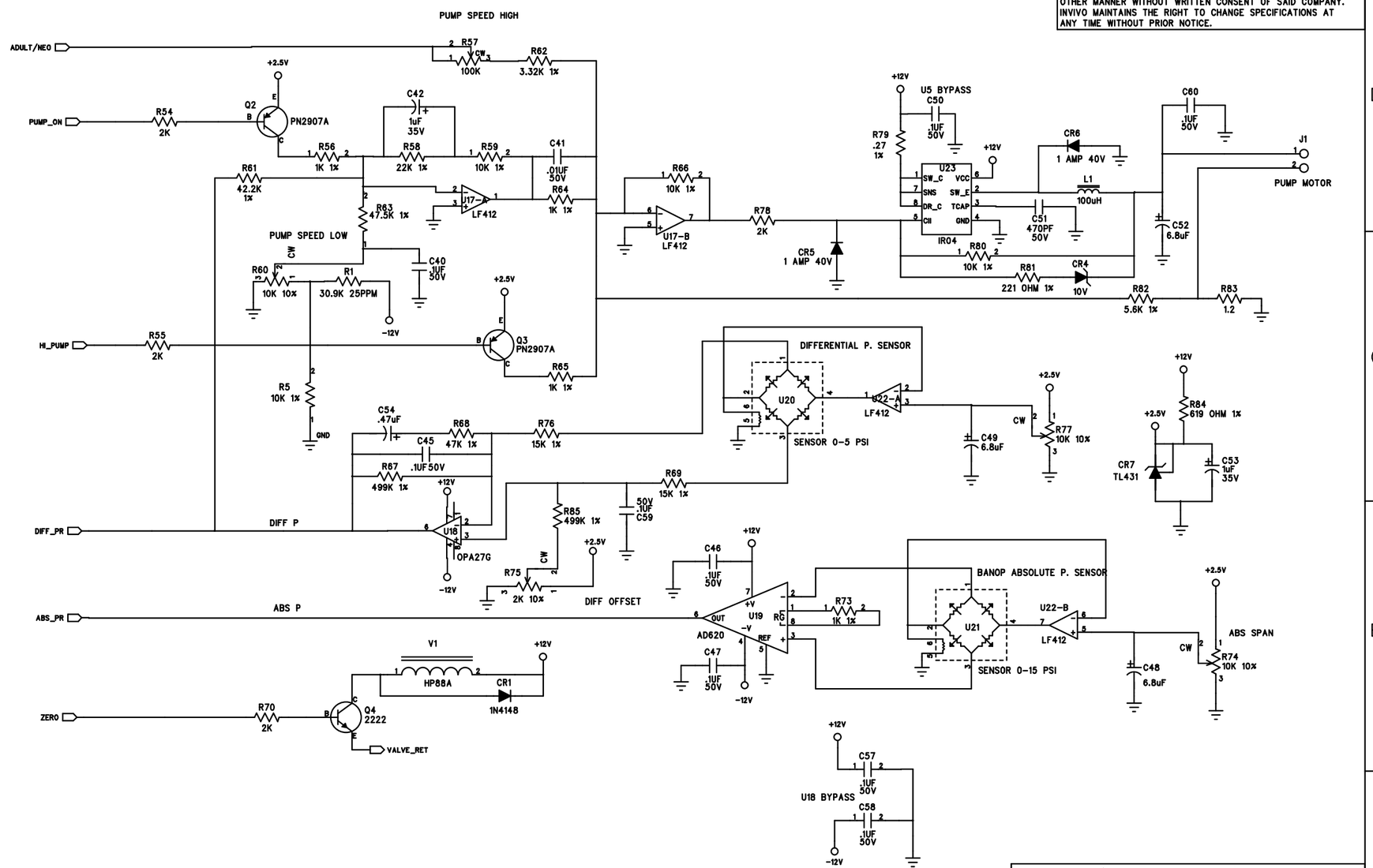

COMPANY:	Invivo Research, Inc. 12601 Research Parkway Orlando, Florida 32826
TITLE:	SCHEMATIC: AB117 PCA, AGENTS PNEUMATICS CONTROLLER, 3500

CODE:	SIZE:	DRAWING NO:	REV:
B186	C	185C225	E

SCALE: NONE — SHEET: 3 OF 3

THIS DOCUMENT IS CONFIDENTIAL AND PROPRIETARY AND IS THE SOLE PROPERTY OF INVIVO RESEARCH INCORPORATED. IT IS NOT TO BE DISCLOSED TO ANY PARTY, REPRODUCED, OR USED IN ANY OTHER MANNER WITHOUT WRITTEN CONSENT OF SAID COMPANY. INVIVO MAINTAINS THE RIGHT TO CHANGE SPECIFICATIONS AT ANY TIME WITHOUT PRIOR NOTICE.

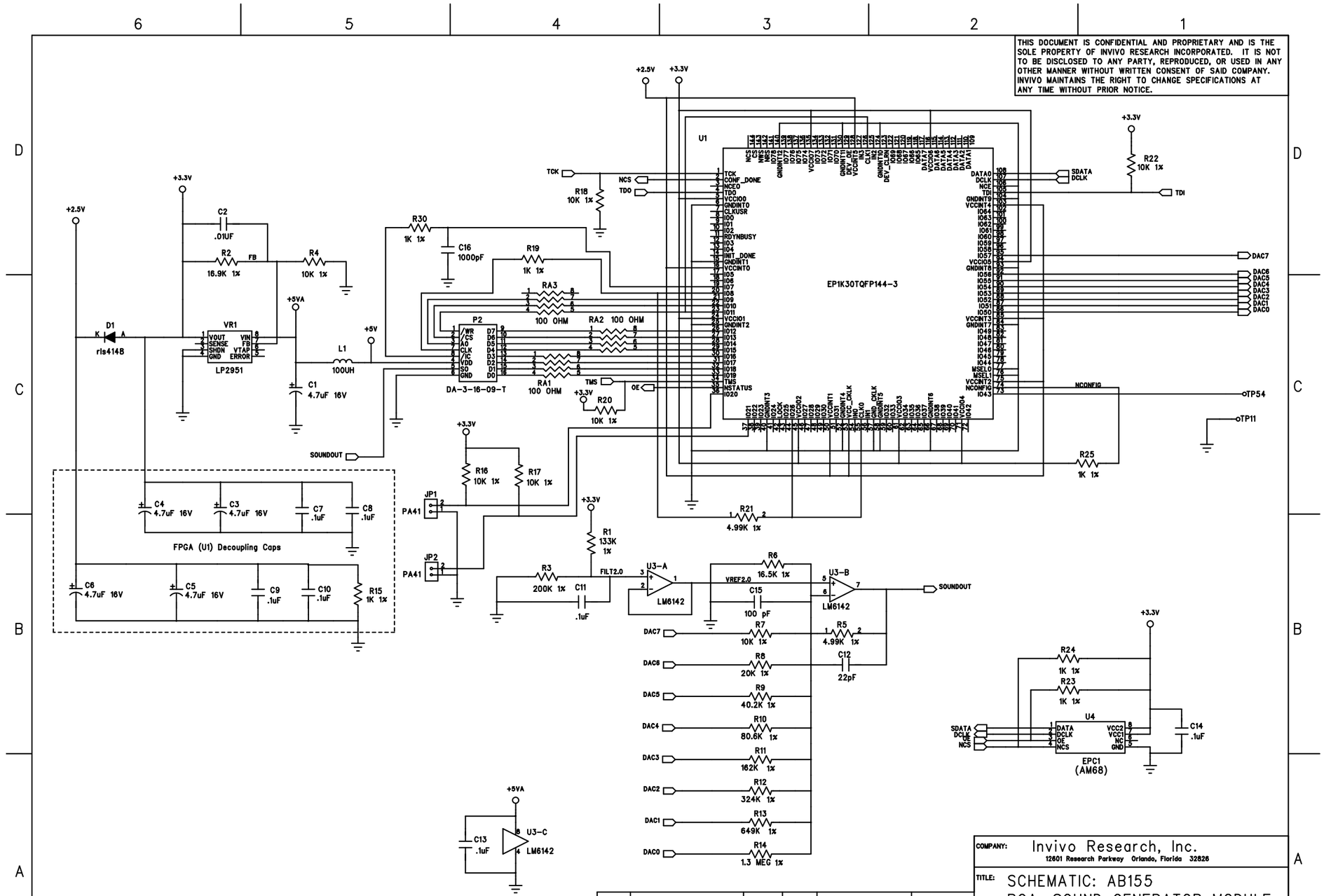

REV.	DESCRIPTION	BY	DATE
B	PER ECN NO. 8208	SLC	08FEB01
A	RELEASE PER ECN #7921	ALH	23JAN01

DRAWN: S. FISHER	DATED: 25JUL00		
CHECKED:	DATED:		
QUALITY CONTROL:	DATED:		
RELEASED:	DATED:		

COMPANY: Invivo Research, Inc.
12601 Research Parkway Orlando, Florida 32826

TITLE: SCHEMATIC: AB155
PCA, SOUND GENERATOR MODULE

PCB:	SIZE:	DRAWING NO:	REV:
B209	C	185C252	B

SCALE: NONE SHEET: 1 OF 1

ECN5877 LF23 REV. A

THIS DOCUMENT IS CONFIDENTIAL AND PROPRIETARY AND IS THE SOLE PROPERTY OF INVIVO RESEARCH INCORPORATED. IT IS NOT TO BE DISCLOSED TO ANY PARTY, REPRODUCED OR USED IN ANY OTHER MANNER WITHOUT WRITTEN CONSENT OF SAID COMPANY. INVIVO MAINTAINS THE RIGHT TO CHANGE SPECIFICATIONS AT ANY TIME WITHOUT PRIOR NOTICE.

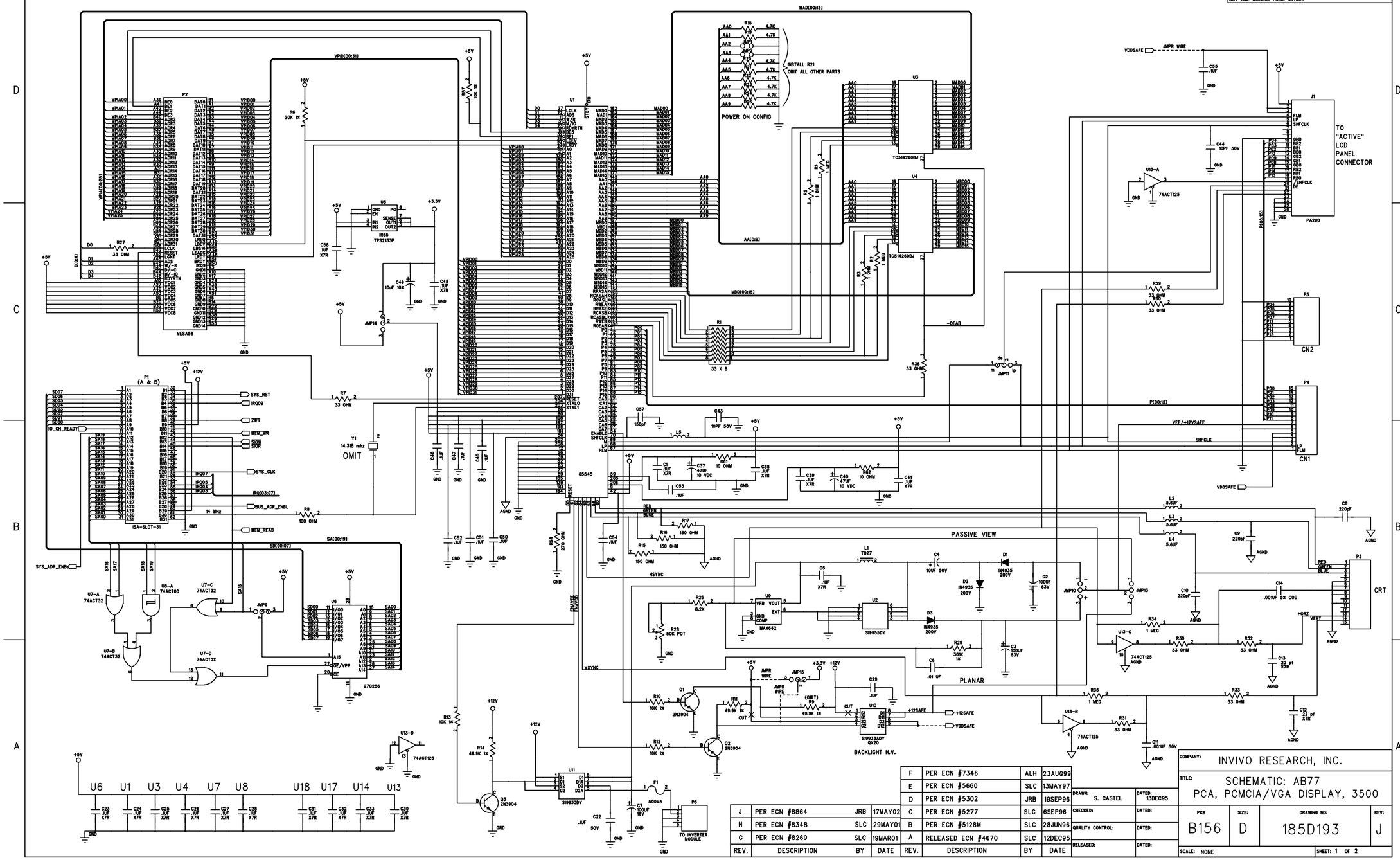

REV.	DESCRIPTION	BY	DATE
J	PER ECN #8864	JRB	17MAY02
H	PER ECN #8348	SLC	29MAY01
G	PER ECN #8269	SLC	19MAR01
F	PER ECN #7346	ALH	23AUG99
E	PER ECN #5660	SLC	13MAY97
D	PER ECN #5302	JRB	19SEP96
C	PER ECN #5277	SLC	6SEP96
B	PER ECN #5128M	SLC	28JUN96
A	RELEASED ECN #4670	SLC	12DEC95

DRAWN:	S. CASTEL	DATED: 13DEC95
CHECKED:		DATED:
QUALITY CONTROL:		DATED:
RELEASED:		DATED:

COMPANY: INVIVO RESEARCH, INC.

TITLE: SCHEMATIC: AB77
PCA, PCMCIA/VGA DISPLAY, 3500

PCB	SIZE:	DRAWING NO:	REV:
B156	D	185D193	J

SCALE: NONE

SHEET: 1 OF 2

THIS DOCUMENT IS CONFIDENTIAL AND PROPRIETARY AND IS THE SOLE PROPERTY OF INVIVO RESEARCH INCORPORATED. IT IS NOT TO BE DISCLOSED TO ANY PARTY, REPRODUCED, OR USED IN ANY OTHER MANNER WITHOUT WRITTEN CONSENT OF SAID COMPANY. INVIVO MAINTAINS THE RIGHT TO CHANGE SPECIFICATIONS AT ANY TIME WITHOUT PRIOR NOTICE.

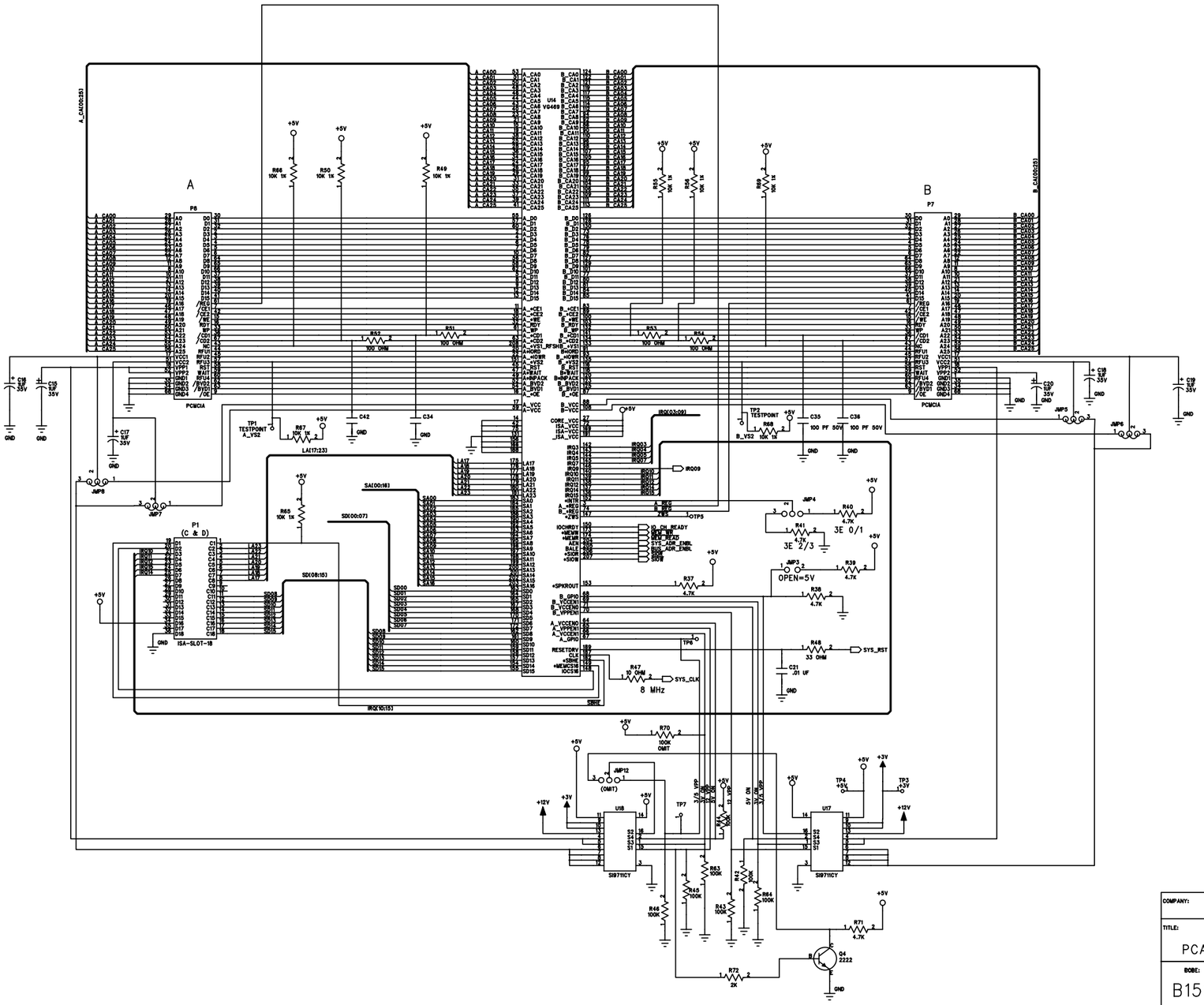

COMPANY:	Invivo Research, Inc.
TITLE:	SCHEMATIC: AB77 PCA, PCMCIA/VGA DISPLAY, 3500

BOBE:	SIZE:	DRAWING NO:	REV:
B156	D	185D193	J

SCALE: NONE

SHEET: 2 OF 2

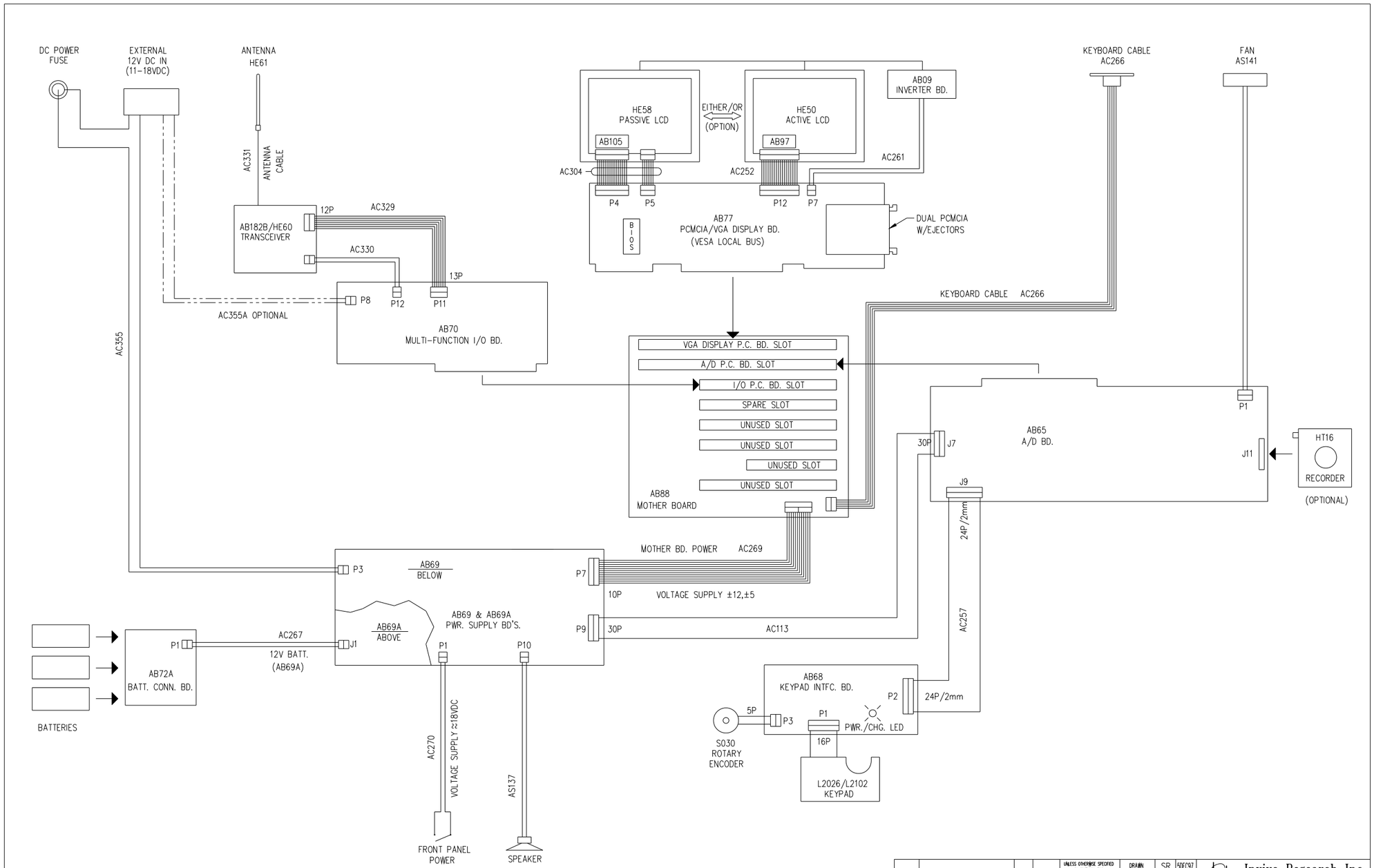

REV.	DESCRIPTION	BY	DATE
C	PER ECN #8394	SR	31AUG01
B	PER ECN #8114	SR	21MAY01
A	RELEASED, ECN #6226	SR	10-DEC-97

THIS DOCUMENT IS CONFIDENTIAL AND PROPRIETARY AND IS THE SOLE PROPERTY OF INVIVO RESEARCH INCORPORATED (IRI). IT IS NOT TO BE DISCLOSED TO ANY PARTY, REPRODUCED OR USED IN ANY OTHER MANNER WITHOUT WRITTEN CONSENT OF SAID COMPANY. INVIVO RESEARCH INC. MAINTAINS THE RIGHT TO CHANGE SPECIFICATIONS AT ANY TIME WITHOUT PRIOR NOTICE.

UNLESS OTHERWISE SPECIFIED TOLERANCES ARE
.XX = ±
.XXX = ±
ANGLES = ±

DRAWN	SR	5DEC97
DESIGNED	JB	20EC97
CHECKED		
APPROVED		

INCHES — THIRD ANGLE PROJECTION

DO NOT SCALE THIS DRAWING !!!

Invivo Research Inc.
PRECISION BIOMEDICAL INSTRUMENTS
Subsidiary of Invivo Corporation
12601 RESEARCH PARKWAY., ORLANDO, FL 32826

TITLE: INTRCNCT. DIAGRAM: 3155MVS MILLENNIA REMOTE DISPLAY CONTROLLER

CAD SCALE:	SHEET:	DWG. NO.:	REV.:
NONE	1 OF 1	190C057	C

ECN5877

LF21 REV. A

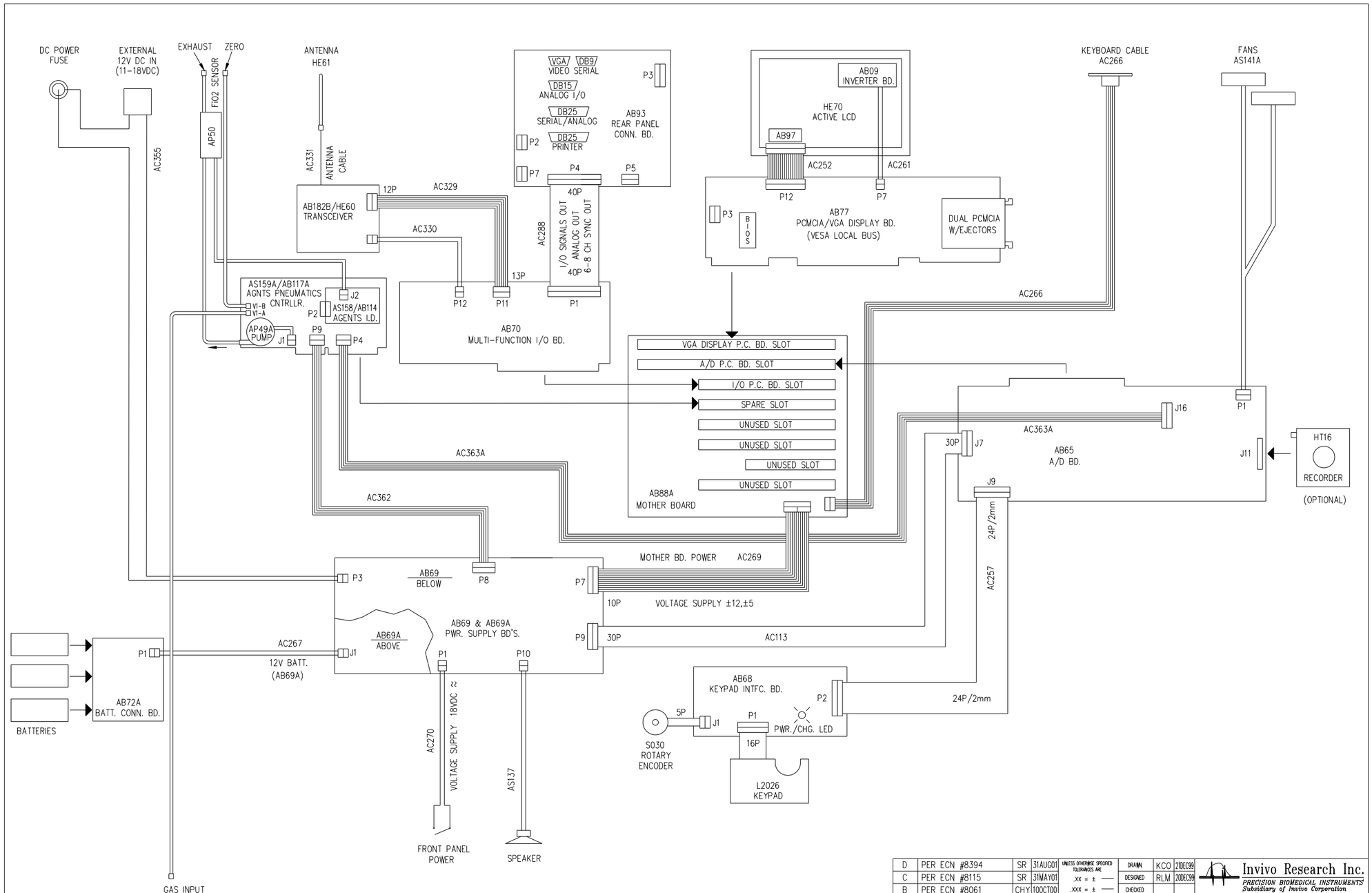

REV.	DESCRIPTION	BY	DATE
D	PER ECN #8394	SR	31AUG01
C	PER ECN #8115	SR	31MAY01
B	PER ECN #8061	CHY	100CT00
A	RELEASED, ECN #7512	KCO	21DEC99

THIS DOCUMENT IS CONFIDENTIAL AND PROPRIETARY AND IS THE SOLE PROPERTY OF INVIVO RESEARCH INCORPORATED (IRI). IT IS NOT TO BE DISCLOSED TO ANY PARTY, REPRODUCED OR USED IN ANY OTHER MANNER WITHOUT WRITTEN CONSENT OF SAID COMPANY. INVIVO RESEARCH INC. MAINTAINS THE RIGHT TO CHANGE SPECIFICATIONS AT ANY TIME WITHOUT PRIOR NOTICE.

UNLESS OTHERWISE SPECIFIED TOLERANCES ARE
.XX = ±
.XXX = ±
ANGLES = ±

DRAWN	KCO	21DEC99
DESIGNED	RLM	20DEC99
CHECKED		
APPROVED		

INCHES — THIRD ANGLE PROJECTION

DO NOT SCALE THIS DRAWING !!!

Invivo Research Inc.
PRECISION BIOMEDICAL INSTRUMENTS
Subsidiary of Invivo Corporation
12601 RESEARCH PARKWAY., ORLANDO, FL 32826

TITLE: INTRCNCT. DIAGRAM: 3155A MILLENNIA REMOTE MONITOR, AGENTS

CAD SCALE:	SHEET:	DWG. NO.:	REV.:
NONE	1 OF 1	190C062	D

ECN5877

LF21 REV. A

NOTES:

1. AFTER CORD (1) HAS BEEN HI-POT TESTED, PLACE IN BAG (2) AND PLACE IRL LABEL ON BAG AS SHOWN.
2. MAXIMUM DIAMETER OF COIL TO BE 4 1/2".

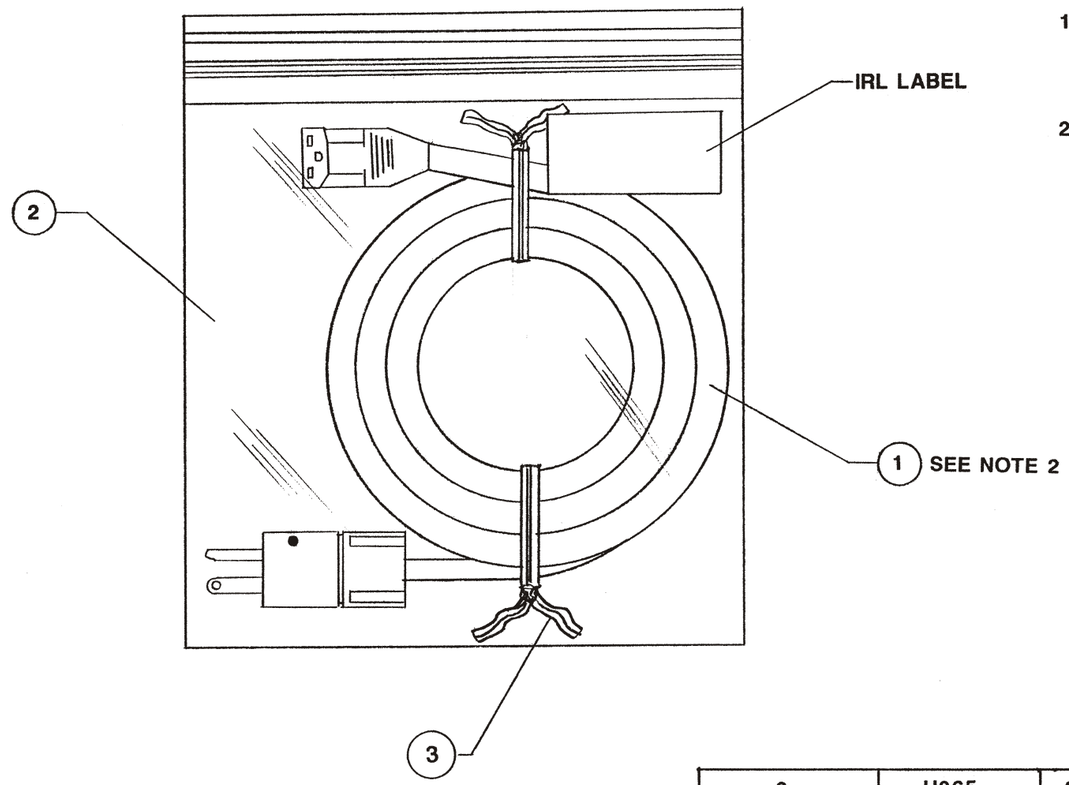

LOCATION	PART NO.	QTY.	DESCRIPTION
3	H065	2	TWIST TIE, PAPER WIRE, 6", WHITE
2	M001C	1	BAG, 8 x 8 x 1.75 MIL.
1	HE02	1	LINE CORD, 110V

REV.	DESCRIPTION	BY	DATE
A	PER ECN NO. 3006	CHH	8/28/91

UNLESS SPECIFIED TOLERANCES ARE
X = ±.030
XX = ±.015
XX = ±.005
ANGLES = 1/2 DEGREE
FRACTIONS
<12" = ±1/32 >12" = ±1/16

DRAWN	SLL	8/87
DESIGNED		9/91
CHECKED		
APPROVED		

THIS DOCUMENT IS CONFIDENTIAL AND PROPRIETARY AND IS THE SOLE PROPERTY OF INVIVO RESEARCH INCORPORATED (IRI). IT IS NOT TO BE DISCLOSED TO ANY PARTY, REPRODUCED OR USED IN ANY OTHER MANNER WITHOUT WRITTEN CONSENT OF SAID COMPANY. INVIVO MANTAINS THE RIGHT TO CHANGE ANY SPECIFICATIONS AT ANY TIME WITHOUT PRIOR NOTICE.
DOC. NO. 10A006

INVIVO RESEARCH INC.
12443 RESEARCH PARKWAY #201
ORLANDO, FLORIDA 32826

TITLE AS18

POWER CORD SET, 110V TESTED

SCALE	SHEET	DWG. NO.	REV.
	1 OF 1	194B479	A

NOTES:
1. PLACE IN BAG (2) AND PLACE IRL LABEL ON BAG AS SHOWN.

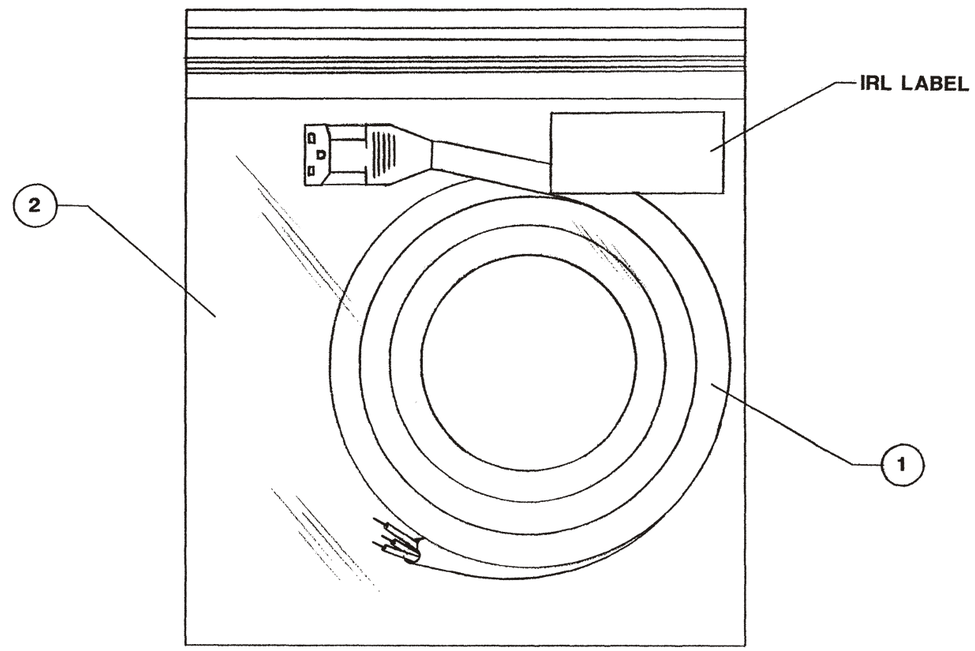

LOCATION	PART NO.	QTY.	DESCRIPTION
2	MOO1B	1	BAG, 6" X 6" X 1.15 MIL
1	HEO1	1	LINE CORD, 250V, 6A, (BBS-1308)

REV.	DESCRIPTION	BY	DATE
A	PER ECN NO. 3784	CHY	2/10/94

UNLESS SPECIFIED TOLERANCES ARE
X = ±.030
XX = ±.015
XX = ±.005
ANGLES = 1/2 DEGREE
FRACTIONS
<12" = ±1/32 >12" = ±1/16

DRAWN	SLL	8/89
DESIGNED		
CHECKED		9/89
APPROVED		9/89

THIS DOCUMENT IS CONFIDENTIAL AND PROPRIETARY AND IS THE SOLE PROPERTY OF INVIVO RESEARCH INCORPORATED (IRI). IT IS NOT TO BE DISCLOSED TO ANY PARTY, REPRODUCED OR USED IN ANY OTHER MANNER WITHOUT WRITTEN CONSENT OF SAID COMPANY. INVIVO MANTAINS THE RIGHT TO CHANGE ANY SPECIFICATIONS AT ANY TIME WITHOUT PRIOR NOTICE. DOC. NO. 10A006

INVIVO RESEARCH INC.
12443 RESEARCH PARKWAY #201
ORLANDO, FLORIDA 32826

TITLE AS18A
POWER CORD SET, 220V

SCALE	SHEET	DWG. NO.	REV.
	1 OF 1	194B480	A

ITEM / REF. DES.	PART NO.	QTY.	DESCRIPTION
R71	R150	1	RES, 10 MEG., .25W, 5%, CF
R44	RX325	1	RES, 1.5K, 1%, .1W, 25PPM, 0805
R52,53	RX254	2	RES, 2K, 1%, .1W, 25PPM, 0805
R58,60,61,67	RX250	4	RES, 10K, 1%, .1W, 100PPM, 0805
R54	RX246	1	RES, 100K, 1%, .1W, 100PPM, 0805
R59	RX243	1	RES, 1K, 1%, .1W, 100PPM, 0805
R50,63	RX236	2	RES, 20K, 1%, .1W, 100PPM, 0805
R22,23	RX240	2	RES, 221 OHM, 1%, .1W, 100PPM, 0805
R24-27,32,33, 46,47,69	RX239	9	RES, 1K, 1%, .1W, 25PPM, 0805
R65,66	RX238	2	RES, 51.1K, 1%, .1W, 100PPM, 0805
R34	RX224	1	RES, 1K, 5%, .1W, 250PPM, 0805
R29,30	RX242	2	RES, 499 OHM, 1%, .1W, 100PPM, 0805
R68	RX282	1	RES, 3.32K, 1%, .1W, 100PPM, 0805
R36-43,48 49, 64	RX235	11	RES, 10K, 1%, .1W, 25PPM, 0805
R31	RX234	1	RES, 7.5K, 1%, .1W, 100PPM, 0805
R35,R57	RX26	2	RES, 10M, .125W, 5%, 200PPM, 1206
R55	RX232	1	RES, 200K, 1%, .1W, 100PPM, 0805
R1,3,5,7,9,11, 13,15,17,19,21	RX231	11	RES, 100K, 1%, .1W, 25PPM, 0805
R2,4,6,8,10,12 14,16,18,20,70	RX230	11	RES, 100 OHM, 1%, .1W, 25PPM, 0805
R28	RX218	1	RES, 33 OHM, 5%, .1W, 250 PPM, 0805
R45,56	RX215	2	RES, 10 OHM, 5%, .1W, 250 PPM, 0805
R51	RX260	1	RES, 90.9 OHM, 1%, .1W, 25PPM, 0805
Q3	QX01	1	TRANSISTOR, CBE PNP, SMALL SIGNAL
Q2	QX00	1	TRANSISTOR, NPN, SILICON, 2222, SOT-23
J5	PA369	1	CONN, 4P, SR, HDR, ST, SHRD, .098 CTRS
J2	PA08	1	HDR, 3P, UNSHRD, SR, ST, (.100)
J1	PA368	1	CONN, 30P, DR, RA, RCPT, PCB MT. (.100)
VR2	IR10	1	REGULATOR, NEGATIVE, LM337LZ
VR1	IR09	1	VREG, POS, LM317LZ, TO-92
U8	IMX12	1	IC,EEPROM,SERIAL CMOS,2WIRE,64K(8192X8)
U10	ILX27	1	IC, OP AMP DUAL LT1124CS8
U12	ILX28	1	IC, OP AMP, QUAD, LOW PWR, MC33179D
VR3	ILX18	1	IC, VREF, +5V, PRECISION, REF02CS
U11	ILX16	1	IC, INSTRUMENTATION AMPLIFIER, AD620BR
U6,7,9,14	ILX10	4	IC, OP AMP, LO-DRIFT, JFET, LF412D
U4,5	ILX06	2	IC, 8 CH., ANALOG, CMOS, MUX, DG508ADY
U1-3	IL63	3	IC, OP AMP, DUAL/QUAD, CHOPPER,14P DIP
U13	IL59	1	SENSOR, TEMP., CENTIGRADE, TO-92
CR1	DDX01	1	DIODE, SIGNAL, LEADLESS, 500MW
C18-21,24,41,60	CXT05	7	CAP, 10 UF, 20%, 35V, D-CASE TANT. CHIP
C64,65	CX60	2	CAP, .001 UF, 10%, 50V, X7R
C40,44,63,68	CX59	4	CAP, .01 UF, 10%, 50V, X7R, 0805
C49-58	CP41	10	CAP, .22 UF, 5%, 50V, LO-PRO, POLYESTER
C33	CX55	1	CAP, 27pF, 10%, 50V, COG, 0805
C35,42	CX57	2	CAP, 20pF, 10%, 50V, COG, 0805
C1-17,22,23,25-32,34,36-39,43, 45-48,59,61,62 66,67,69-71	CX58	45	CAP, .1UF,10%,50V,X7R, 0805 CERAMIC CHIP
1	B183	1	PCB, AGENT DETECTOR, 3500 REV. B

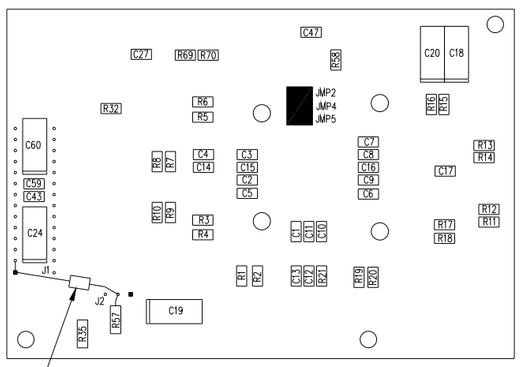

COMPONENTS BOTTOM

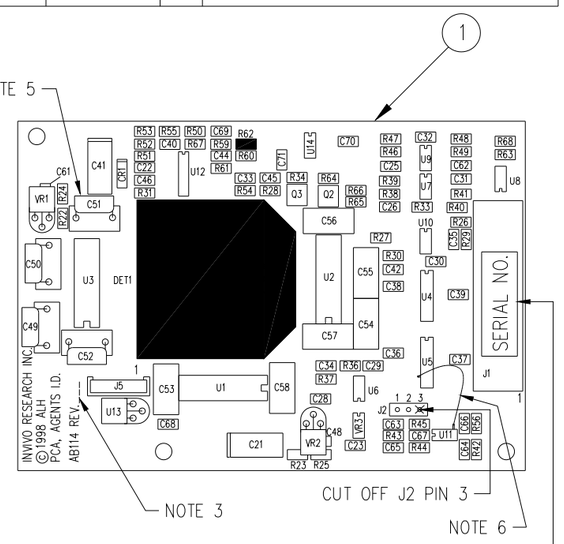

COMPONENTS TOP

NOTES:

1. WORKMANSHIP TO CONFORM TO IPC CLASS II REQUIREMENTS.
2. BOARD REQUIRES SERIALIZED LABELING WITH THE FOLLOWING INFORMATION: UNIQUE SERIAL NO., ASSEMBLY P/N & CURRENT REV. LEVEL. PLACE SERIAL NUMBER LABEL IN THIS AREA-ORIENT AS SHOWN.
3. USING INDELIBLE INK IN CONTRASTING COLOR, PLACE CURRENT ASSEMBLY REVISION IN SPACE PROVIDED.
4. COMPONENTS SHOWN AS SOLID ARE TO BE OMITTED.
5. BEND OVER COMPONENTS C49-52, VR1, VR2 AND U13 AS MUCH AS POSSIBLE IN THE DIRECTION SHOWN.
6. COMPONENT SIDE, REF. DES. U5, REMOVE PIN 6 FROM GROUND BY DE-SOLDERING AND LIFTING LEG AWAY FROM SURFACE MOUNT PAD. ADD BLUE JUMPER WIRE P/N W004A OR EQUIVALENT FROM U5, PIN 6 LEG TO U11, PIN 6.
7. ADD P/N R150 RESISTOR (REF. DES. R71) BETWEEN +12V J1-1,3 AND J2-2 ON SOLDERSIDE. ADD HEAT SHRINK TO LEADS TO PREVENT SHORTING. SECURE COMPONENT TO BOARD USING P/N M107 ADHESIVE.

REV.	DESCRIPTION	BY	DATE
E	PER ECN #7256	JWT	23JUN99
D	PER ECN #7194M	CHY	25MAY99
C	PER ECN #6851	ALH	10DEC98
B	PER ECN #6806M	KCO	27AUG98
A	RELEASED, ECN 6618	SLC	29MAY98

REV.	DESCRIPTION	BY	DATE
F	PER ECN #7661	CHY	2MAR00

THIS DOCUMENT IS CONFIDENTIAL AND PROPRIETARY AND IS THE SOLE PROPERTY OF INVIVO RESEARCH INCORPORATED (IRI). IT IS NOT TO BE DISCLOSED TO ANY PARTY, REPRODUCED OR USED IN ANY OTHER MANNER WITHOUT WRITTEN CONSENT OF SAID COMPANY. INVIVO RESEARCH INC. MAINTAINS THE RIGHT TO CHANGE SPECIFICATIONS AT ANY TIME WITHOUT PRIOR NOTICE.

UNLESS OTHERWISE SPECIFIED TOLERANCES ARE
.XX = ± .02
.XXX = ± .010
ANGLES = ± 1°

DRAWN	SLCASTEL	03SEP97
DESIGNED	SLCASTEL	03SEP97
CHECKED		
APPROVED		

INCHES — THIRD ANGLE PROJECTION

DO NOT SCALE THIS DRAWING !!!

Invivo Research Inc.
PRECISION BIOMEDICAL INSTRUMENTS
Subsidiary of Invivo Corporation
12601 RESEARCH PARKWAY., ORLANDO, FL 32826

TITLE: ASSEMBLY: AB114
PCA, AGENT DETECTOR, 3500

CAD SCALE:	SHEET:	DWG. NO.:	REV.:
NONE	1 of 1	194C773	F

ASSEMBLY NOTES:

1. APPLY P/N M050 LOCTITE (REF.) TO METAL THREADS UNLESS OTHERWISE NOTED.
2. ADD 0.75 LENGTHS OF P/N WT01 HEAT SHRINK (ITEM 19) TO P/N AC349 CABLE WIRES (ITEM 12) AND TO P/N AC354 CABLE (ITEM 9). J-HOOK AND SOLDER THOSE WIRES TO P/N D030 DIODE (ITEM 17) LEADS, ORIENTED AS SHOWN.
3. ROUTE TO INSPECTION.
4. SHRINK THE SLEEVING IN PLACE ON THE D030 DIODE LEADS TO COVER THE SOLDER JOINTS.
5. ADD P/N NW01 LOCKWASHER (ITEM 48) TO SCREW SUPPLIED WITH P/N HC30 CLAMP (ITEM 20). ORIENT SCREW IN CLAMP AS SHOWN. PLACE P/N CA21 CAPACITOR (ITEM 3) INTO CLAMP AND TIGHTEN.
6. ATTACH THE BLACK AC349 CABLE WIRES, AC352 (BLACK) CABLE (ITEM 11), AND BLACK AC350 CABLE WIRE (ITEM 13) TO THE NEGATIVE (-) TERMINAL OF CA21 CAPACITOR. CARE MUST BE TAKEN TO ORIENT THE LEADS FOR BEST FIT WHEN THE CAPACITOR IS MOUNTED IN THE BOX.
7. ATTACH THE AC354 CABLE (FROM D030), AC351 (RED) CABLE (ITEM 10) AND (RED) AC350 CABLE WIRE, TO THE POSITIVE (+) TERMINAL OF CA21 CAPACITOR. CARE MUST BE TAKEN TO ORIENT THE LEADS FOR BEST FIT WHEN THE CAPACITOR IS MOUNTED IN THE BOX.
8. SECURE D030 DIODE TO THE WALL OF P/N HM66AL BOX (ITEM 1), USING TWO P/N H101 INSULATOR (ITEM 18), P/N NS114N SCREW (ITEM 36), P/N HI03 BUSHING (ITEM 16) AND P/N N002 NUT (ITEM 34). TIGHTEN SCREW TO 7-8 IN. LBS. USING CALIBRATED TORQUE SCREW DRIVER.
9. SECURE THE CAPACITOR CLAMP TO THE WALL OF HM66AL USING TWO P/N NS111N SCREWS (ITEM 25) AND TWO P/N N001 NUTS (ITEM 33).
10. MOUNT THE TWO AC349 CONNECTORS TO THE WALL OF THE BOX USING TWO P/N HS28BN SCREWLOCKS (ITEM 14) FOR EACH CONNECTOR, P/N PA202 9-PIN GASKET (ITEM 4), AND P/N PA366 15-PIN GASKET (ITEM 5).
11. MOUNT AB123 (ITEM 40) TO THE BACK OF THE DB9 CONNECTOR OF AC349 USING P/N HS59 STANDOFFS (ITEM 41) AND P/N NS04N SCREWS (ITEM 42). THE LED SHOULD PROTRUDE THROUGH THE HOLE IN THE HM66AL BOX AND SHOULD BE MOUNTED USING USING P/N H025 LED HOLDER (ITEM 8).
12. PLUG AC350 CONNECTOR ONTO AB123, P1.
13. APPLY P/N M014 HEAT SINK COMPOUND (REF.) EVENLY OVER THE MOUNTING SURFACE OF P/N DB01 DIODE BRIDGE (ITEM 6). ORIENT THE BRIDGE PER DETAIL A AND SECURE IT TO THE WALL OF THE BOX USING NS112N SCREW (ITEM 27), P/N NW08 LOCK WASHER (ITEM 31) AND P/N N003 NUT (ITEM 24).
14. SECURE P/N HE16 BINDING POST (ITEM 21) AND P/N AW149 TERMINAL (ITEM 39) TO THE HM66AL BOX WALL USING HARDWARE SUPPLIED WITH P/N HE16 AND NW08 LOCKWASHER POSITIONED AS SHOWN.
15. ORIENT P/N S016 SWITCH (ITEM 23) PER DETAIL B AND PRESS IT INTO HM66AL BOX.
16. SELECT P/N AS136/AS136J TRANSFORMER ASSEMBLY (ITEM 2) FROM CHART. ORIENT AND MOUNT FILTER PART OF TRANSFORMER ASSEMBLY INTO THE BOX USING TWO P/N NS17 SCREWS (ITEM 26), TWO P/N NW12 WASHERS (ITEM 7), TWO P/N NW09 LOCK WASHERS (ITEM 32) AND TWO P/N N002 NUTS (ITEM 34).
    SECURE P/N AW149 TERMINAL TO THE SCREW SHOWN, USING A SECOND NW09 LOCKWASHER.
17. CONNECT FOUR AS136/AS136J WIRES TO THE S016 SWITCH (PER DETAIL B) AND CONNECT WIRES TO PREVIOUSLY MOUNTED P/N DB01 DIODE BRIDGE (PER DETAIL A). CONNECT WHITE WIRE OF AC350 AND GREY WIRE OF AS136/AS136J TO P/N DB01 DIODE BRIDGE USING PT53 ADAPTER (ITEM 43).
18. PRINT ASSEMBLY NUMBER, REVISION, LOT NUMBER AND ASSEMBLER INITIALS ON INSIDE SURFACE OF COVER WHERE IT WON'T BE COVERED BY THE TRANSFORMER.
19. ORIENT THE BOX LID SO THE TRANSFORMER MOUNTING HOLE IS CLOSER TO THE AC349 CONNECTORS THAN TO THE S016 SWITCH. SET THE HM66AL BOX ON ITS SIDE AND ATTACH THE AS136/AS136J TRANSFORMER ASSEMBLY AND THE HI36 INSULATOR (ITEM 22) TO THE BOX COVER USING P/N NS113N SCREW (ITEM 29), P/N NW06 FLAT WASHER (ITEM 30), P/N NW18 LOCK WASHER (ITEM 49), P/N M007 RED LOCTITE (REF.) AND P/N N034N NUT (ITEM 35).
20. APPLY P/N M008A SEALER (REF.) TO THE DIODE LEADS TO PROTECT AND STABILIZE THEM. ALSO APPLY M008A TO SECURE H025 LED HOLDER.
21. ROUTE TO INSPECTION.
22. SECURE THE LID TO THE BOX USING SIX P/N NS111N SCREWS (ITEM 25).
23. MOUNT TWO 4.00 LENGTHS OF P/N M031 HOOK FASTENER (ITEM 37) TO THE LID 1.00 FROM EACH END. SECURE TWO 4.00 LENGTHS OF P/N M032 LOOP FASTENER (ITEM 38) TO THE HOOK FASTENER BUT DO NOT STRIP THE BACKING.
24. SELECT P/N L2059/L2059J INPUT VOLTAGE LABEL (ITEM 47) FROM CHART AND MOUNT CENTERED AND BELOW TOP VELCRO STRIP. SEE BOTTOM VIEW ON SHEET 3 FOR APPROXIMATE LOCATION.
25. SELECT P/N L2057/L2057J PRODUCT ID LABEL (ITEM 45) FROM CHART AND MOUNT ON BOTTOM OF UNIT CENTERED ABOVE VELCRO STRIP AND BELOW TRANSFORMER MOUNTING HOLE. SEE BOTTOM VIEW ON SHEET 3 FOR APPROXIMATE LOCATION.
26. MOUNT P/N L137A CE COMPLIANCE LABEL (ITEM 44) AND P/N L185 DATE OF MFR LABEL (ITEM 51) BELOW INPUT VOLTAGE LABEL, ON EACH SIDE OF CENTER. SEE BOTTOM VIEW ON SHEET 3 FOR APPROXIMATE LOCATION.
27. MOUNT P/N L2058 CAUTION LABEL (ITEM 46) ON TOP OF UNIT. SEE SHEET 3 FOR LOCATING DIMENSIONS.
28. WRAP EACH ASSEMBLY IN P/N M082 BUBBLE WRAP (ITEM 50), LEAVING THE ENDS OPEN.
29. ROUTE TO INSPECTION.

REF. WIRING DIAGRAM C90C073

ASSEMBLY	ITEM / REF. DES.	PART NO.	QTY.	DESCRIPTION
AS153	2	AS136	1	ASSY., MAINS INPUT & TRANSFORMER
	45	L2057	1	LABEL, PROD. I.D., 3150 SERIES AC ADAPTER
	47	L2059	1	LABEL, INPUT VOLT., 3150 SERIES AC ADAPTER
AS153J	2	AS136J	1	ASSY., MAINS INPUT & TRANSFORMER
	45	L2057J	1	LABEL, PROD. I.D., 3150/100V SERIES AC ADPTR.
	47	L2059J	1	LABEL, INPUT VOLT., 3150/100V SERIES AC ADPTR.

	ITEM / REF. DES.	PART NO.	QTY.	DESCRIPTION
	REF.	M050	A/R	ADHESIVE, LOCTITE 425, BLUE ASSURE
	REF.	M014	A/R	COMPOUND, HEATSINK 276-1372
	REF.	M008A	A/R	ADHESIVE/SEALANT, RTV
	REF.	M007	A/R	ADHESIVE, LOCTITE 262, RED, THD. LK.
	51	L185	1	LABEL, DATE OF MANUFACTURE
(NOT SHOWN)	50	M082	2 FT.	BUBBLE WRAP, ANTI-STATIC, 12" WD, 319BBL
	49	NW18	1	LOCKWASHER, INT TOOTH, SS #10
	48	NW01	1	LOCKWASHER, INT TOOTH, SS #6
	47	SEE CHART	1	LABEL, INPUT VOLT., 3150 SERIES AC ADAPTER
	46	L2058	1	LABEL, CAUTION, 3150 SERIES AC ADPTR.
	45	SEE CHART	1	LABEL, PROD. I.D., 3150 SERIES AC ADAPTER
	44	L137A	1	LABEL, CE COMPLIANCE, MDD (SEMKO)
	43	PT53	1	FAST-ON TAB ADAPTER, M/M/F
	42	NS04N	2	SCR, #4-40 X 1/4 LG. PHMS-XR, NM
	41	HS59	2	STNDF, 3/16 HEX, F/F, #4-40 X .38
	40	AB123	1	PCA, POWER/CHARGER LED, 3150, REV. A
	39	AW149	1	WIRE ASSY, GROUND, POWER ADAPTER, 3150
	38	M032	8.00	FASTENER, LOOP, BLACK, 1" WIDE
	37	M031	8.00	FASTENER, HOOK, BLACK, 1" WIDE
	36	NS114N	1	SCR, #4-40 X .50 LG. FHMS-XR, NM, BLK
	35	N034N	1	NUT, HEX, #10-32, SS, NM
	34	N002	3	NUT, HEX, #4-40, ZN
	33	N001	2	NUT, HEX, #6-32, ZN
	32	NW09	2	LOCKWASHER, IT, #4, SS, NON-MAG.
	31	NW08	1	LOCKWASHER, INT. TOOTH, #8 SS
	30	NW06	1	WASHER,.187 X .750 X .048, ZN
	29	NS113N	1	SCR, #10-32 X 1-3/4 LG. FHMS-XR, NM, BLK
	28	NS55	2	SCR, #10-32 X 3/8 LG, PHMS-XR, ZN
	27	NS112N	1	SCR, #8-32 X 3/4 LG. FHMS, XR, NM, BLK
	26	NS17	2	SCR, #4-40 X 1/2 LG. PHMS-XR, ZN
	25	NS111N	8	SCR, #6-32 X 1/2 LG. FHMS-XR, NM, BLK
	24	N003	1	NUT, HEX, #8-32, ZN
	23	S016	1	SWITCH, ROCKER, DPST
	22	HI36	1	INSULATOR, TRANSFORMER, TOROIDAL
	21	HE16	1	BINDING POST, METAL
	20	HC30	1	CLAMP, CAPACITOR MOUNT, 1.40 DIA.
	19	WT01	1.50	HEATSHRINK, .125 I.D., BLACK
	18	HI01	2	INSULATOR, THERMALLY CONDUCTIVE
	17	D030	1	DIODE, SCHOTTKY, 45V, 7.5A
	16	HI03	1	BUSHING, SHLDR, NYLON, .120 O.D.
	15	NW39N	2	WASHER, LOCK, SPLIT, #10, SS, NM
	14	HS28BN	4	SCWLCK, FEML, #4-40 X .375 LG, NM
	13	AC350	1	CAB, POWER ADAPTER LED, 3150
	12	AC349	1	CAB, POWER-I/O, 3150
	11	AC352	1	CAB, NEG. D/C VOLTAGE, 3150
	10	AC351	1	CAB, POS. D/C VOLTAGE, 3150
	9	AC354	1	CAB, DIODE POWER, 3150
	8	H025	1	LED HOLDER, .250
	7	NW12	2	WASHER, #4 x .125 x .312 x .030
	6	DB01	1	DIODE BRIDGE, 10 AMP
	5	PA366	1	GASKET, EMI/RFI, 15PIN CONNECTOR
	4	PA202	1	GASKET, EMI/RFI, 9PIN CONNECTOR
	3	CA21	1	CAP, 10,000 uF, -10%/+5%, 35V, AL
	2	SEE CHART	-	ASSY, MAINS INPUT & TRANSFORMER
	1	HM66AL	1	BOX, POWER ADAPTER, 3150

REV.	DESCRIPTION	BY	DATE	REV.	DESCRIPTION	BY	DATE
L	PER ECN #8854	CHY	5JUN02	D	PER ECN #6711	JWT	06JUL98
K	PER ECN #8341	CHY	24MAY01	C	PER ECN #6432	JRB	20MAR98
J	PER ECN #7663	CHY	25JUL00	B	PER ECN #6367	SR	28JAN98
H	PER ECN #7772	JRH	16JUN00	A	RELEASED, ECN #6080	JRB	24OCT97
G	PER ECN #7252	CHY	19JUL99				
F	PER ECN #7083	CHY	1MAR99				
E	PER ECN #6769	SR	11SEP98				

THIS DOCUMENT IS CONFIDENTIAL AND PROPRIETARY AND IS THE SOLE PROPERTY OF INVIVO RESEARCH INCORPORATED (IRI). IT IS NOT TO BE DISCLOSED TO ANY PARTY, REPRODUCED OR USED IN ANY OTHER MANNER WITHOUT WRITTEN CONSENT OF SAID COMPANY. INVIVO RESEARCH INC. MAINTAINS THE RIGHT TO CHANGE SPECIFICATIONS AT ANY TIME WITHOUT PRIOR NOTICE.

UNLESS OTHERWISE SPECIFIED TOLERANCES ARE
.XX = ± .02
.XXX = ± .010
ANGLES = ± 1°

INCHES — THIRD ANGLE PROJECTION

DO NOT SCALE THIS DRAWING !!!

DRAWN	JRB	22OCT97
DESIGNED	JRB	22OCT97
CHECKED		
APPROVED		

INVIVO RESEARCH, INC.
12601 RESEARCH PARKWAY., ORLANDO, FL 32826

TITLE:
ASSEMBLY: AS153/AS153J
ASSY, POWER ADAPTER, 3150

CAD SCALE:	SHEET:	DWG. NO.:	REV:
1 : 1	1 of 3	194C778	L

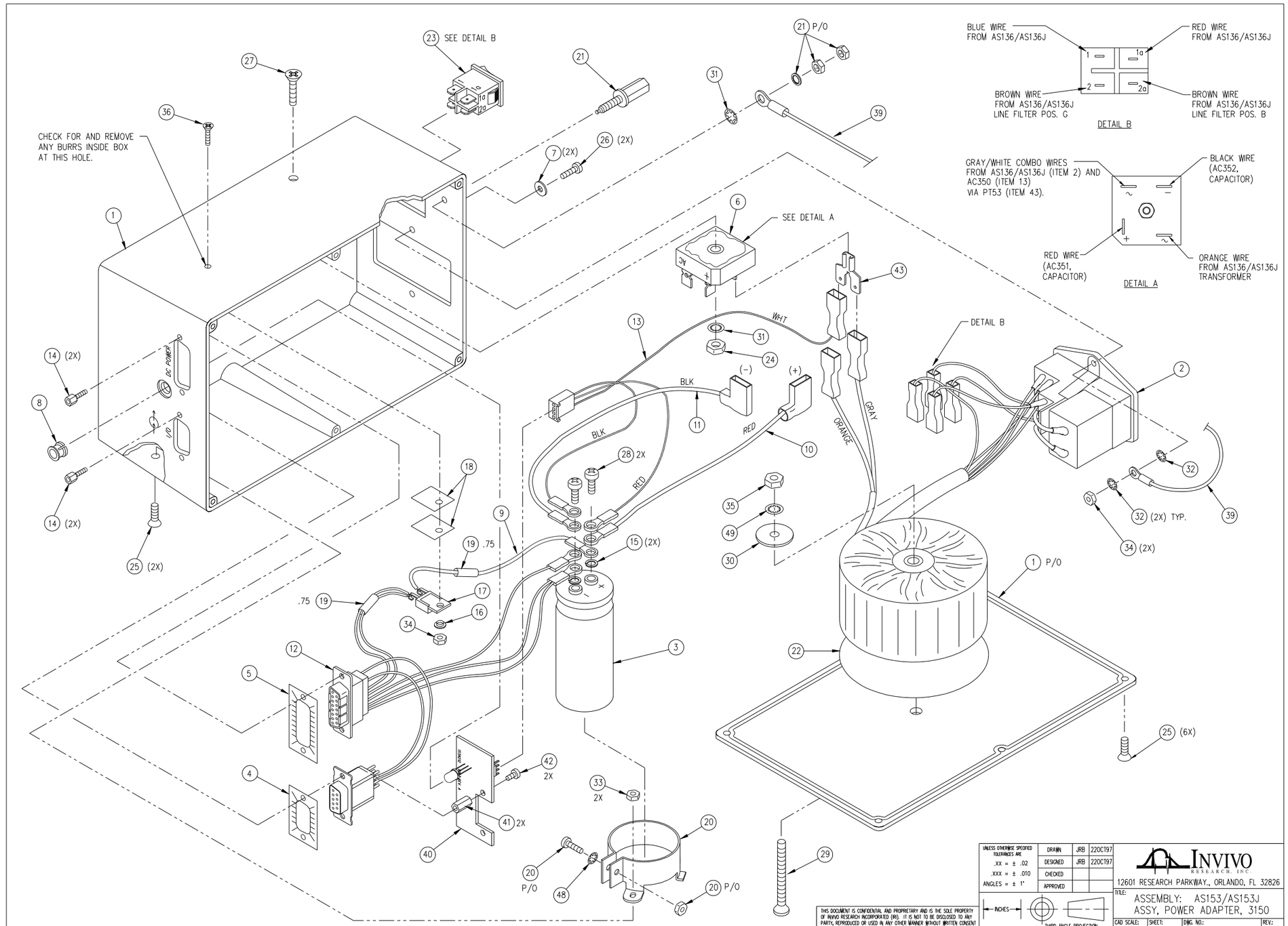

UNLESS OTHERWISE SPECIFIED TOLERANCES ARE			
.XX = ± .02	DRAWN	JRB	220CT97
.XXX = ± .010	DESIGNED	JRB	220CT97
ANGLES = ± 1°	CHECKED		
	APPROVED		

INCHES — THIRD ANGLE PROJECTION

DO NOT SCALE THIS DRAWING !!!

THIS DOCUMENT IS CONFIDENTIAL AND PROPRIETARY AND IS THE SOLE PROPERTY OF INVIVO RESEARCH INCORPORATED (IRI). IT IS NOT TO BE DISCLOSED TO ANY PARTY, REPRODUCED OR USED IN ANY OTHER MANNER WITHOUT WRITTEN CONSENT OF SAID COMPANY. INVIVO RESEARCH INC. MAINTAINS THE RIGHT TO CHANGE SPECIFICATIONS AT ANY TIME WITHOUT PRIOR NOTICE.

INVIVO RESEARCH, INC.
12601 RESEARCH PARKWAY., ORLANDO, FL 32826

TITLE: ASSEMBLY: AS153/AS153J
ASSY, POWER ADAPTER, 3150

CAD SCALE:	SHEET:	DWG. NO:	REV:
1 : 1	2 of 3	194C778	L

ECN8242

LF21 REV. B

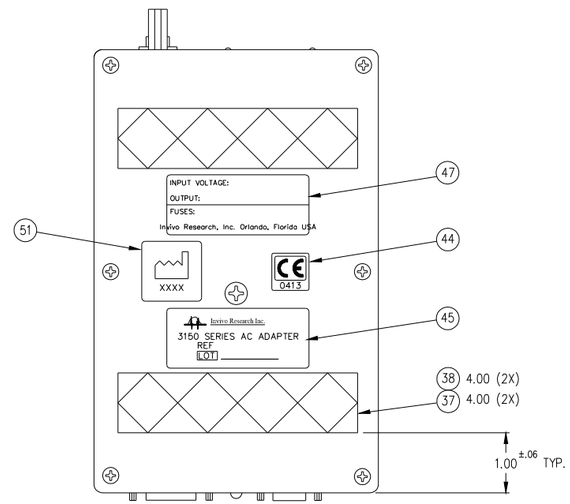

BOTTOM VIEW

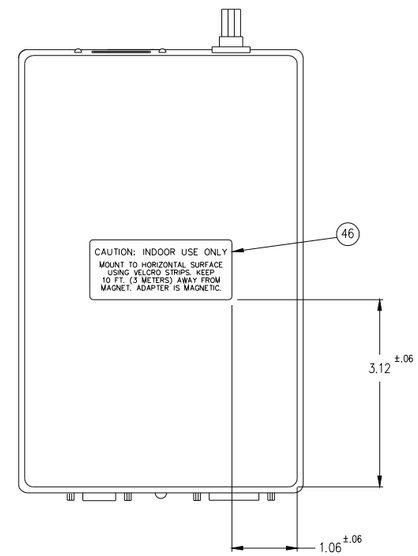

TOP VIEW

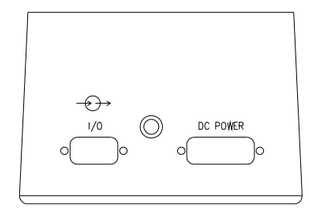

END VIEW

UNLESS OTHERWISE SPECIFIED TOLERANCES ARE			
.XX = ± .02	DRAWN	JRB	220CT97
.XXX = ± .010	DESIGNED	JRB	220CT97
ANGLES = ± 1°	CHECKED		
	APPROVED		

INCHES — THIRD ANGLE PROJECTION

DO NOT SCALE THIS DRAWING !!!

THIS DOCUMENT IS CONFIDENTIAL AND PROPRIETARY AND IS THE SOLE PROPERTY OF INVIVO RESEARCH INCORPORATED (IRI). IT IS NOT TO BE DISCLOSED TO ANY PARTY, REPRODUCED OR USED IN ANY OTHER MANNER WITHOUT WRITTEN CONSENT OF SAID COMPANY. INVIVO RESEARCH INC. MAINTAINS THE RIGHT TO CHANGE SPECIFICATIONS AT ANY TIME WITHOUT PRIOR NOTICE.

INVIVO RESEARCH, INC.
12601 RESEARCH PARKWAY., ORLANDO, FL 32826

TITLE: ASSEMBLY: AS153/AS153J
ASSY, POWER ADAPTER, 3150

CAD SCALE:	SHEET:	DWG. NO.:	REV.:
1 : 1	3 of 3	194C778	L

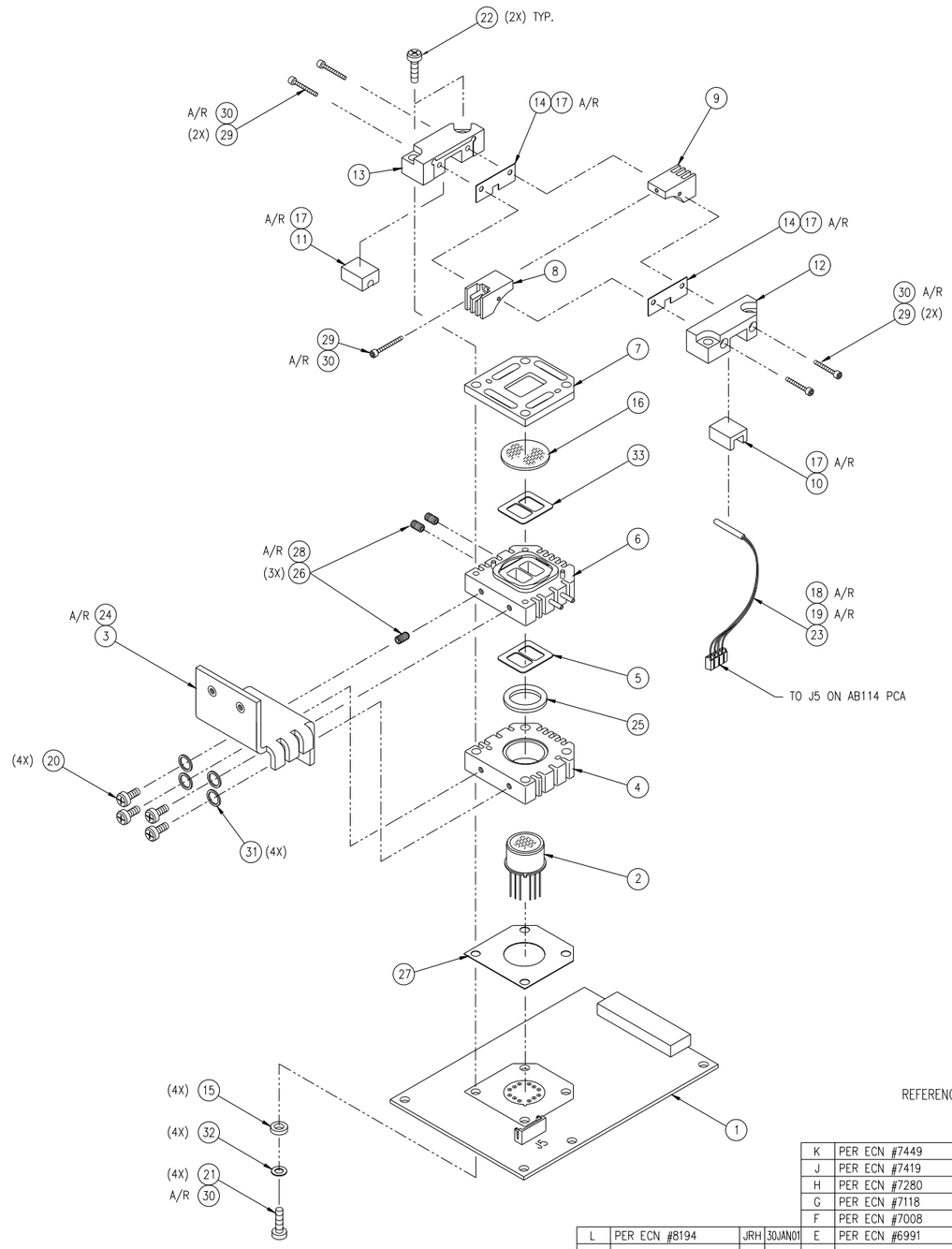

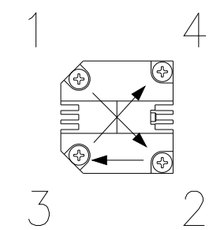

SCREW TIGHTENING PATTERN

REFERENCE ASSEMBLY INSTRUCTIONS AI061

ITEM / REF. DES.	PART NO.	QTY.	DESCRIPTION
33	HM70AAA	1	GASKET,AGENT CELL, VITON
32	NW48	4	LOKWSHER, IT, SS, #4 .123 x .225 x .015
31	NW09	4	LOCKWASHER, INTERNAL TOOTH, #4, SS
30	M050	A/R	ADHESIVE, LOCTITE 425, BLU, THDLK
29	NS124	5	SCR, #0-80 X 1/2" LG, HEX, SOC. HD., ZN
28	M198	A/R	ADHESIVE, LOCTITE 569, BRN, PIPE SEALANT
27	HM70AKA	1	INSULATOR, AGENT DETECTOR, 3500
26	NS95	3	SCR, SET, #4-40 X 3/16, CP-PT, SS
25	HP108	1	O-RING, (2-014) .489 I.D. X .070, VITON
24	M014	A/R	COMPOUND, HEAT SINK, 276-1372
23	AS162	1	ASSY, HEATER, AGENT ANALYZER
22	NS110	4	SCR, #4-40 X 1/2" LG, PHMS-XR, LEXAN
21	NS129	4	SCR, #4-40 X 9/16" LG, PHMS-XR, ZN
20	NS04	4	SCR, #4-40 X 1/4" LG, PHMS-XR, ZN
19	M181	A/R	COATING, BLACK, HIGH EMISSIVITY
18	M180	A/R	ADHESIVE, CERMABOND 632, THERMAL ISOLATION
17	M179	A/R	ADHESIVE, HIGH TEMP, THERMAL CONDUCTIVE
16	H119	1	WINDOW, 18.0mm X 1.0mm
15	NW16	4	WASHER, NYLON, #4 X .250 X .062
14	HM70P	2	PLATE, REFLECTOR, AGENT CELL
13	HM70N	1	END CAP, LEFT, AGENT CELL
12	HM70M	1	END CAP, RIGHT, AGENT CELL
11	HM70L	1	MOUNT, HEATER, LEFT, AGENTS
10	HM70K	1	MOUNT, HEATER, RIGHT, AGENTS
9	HM70G	1	REFLECTOR, LEFT, AGENT CELL
8	HM70F	1	REFLECTOR, RIGHT, AGENT CELL
7	HM70C	1	PLATE, INSULATOR, AGENT CELL
6	HM70B	1	MOUNTING BLOCK, DETECTOR, AGENTS
5	HM70AA	1	GASKET, AGENT DETECTOR, VITON
4	HM70A	1	HEATSINK, DETECTOR, AGENTS
3	HM50BG	1	HEATSINK, DETECTOR, 3500
2	DP04A2	1	DETECTOR, THERMOPILE, 7 AGENT
1	AB114	1	PCA, AGENTS DETECTOR, 3500

REV.	DESCRIPTION	BY	DATE
L	PER ECN #8194	JRH	30JAN01
K	PER ECN #7449	CHY	11FEB00
J	PER ECN #7419	SR	190CT99
H	PER ECN #7280	CHY	2AUG99
G	PER ECN #7118	CHY	16APR99
F	PER ECN #7008	CHY	2FEB99
E	PER ECN #6991	RLM	23DEC98
D	PER ECN #6800	CHY	18DEC98
C	PER ECN #6891	CHY	4NOV98
B	PER ECN #6758	CHY	14AUG98
A	RELEASED. ECN #6585	SR	4/98

THIS DOCUMENT IS CONFIDENTIAL AND PROPRIETARY AND IS THE SOLE PROPERTY OF INVIVO RESEARCH INCORPORATED (IRI). IT IS NOT TO BE DISCLOSED TO ANY PARTY, REPRODUCED OR USED IN ANY OTHER MANNER WITHOUT WRITTEN CONSENT OF SAID COMPANY. INVIVO RESEARCH INC. MAINTAINS THE RIGHT TO CHANGE SPECIFICATIONS AT ANY TIME WITHOUT PRIOR NOTICE.

UNLESS OTHERWISE SPECIFIED TOLERANCES ARE
.XX = ±
.XXX = ±
ANGLES = ±

DRAWN	SR	4/98
DESIGNED	RLM	DATE
CHECKED		
APPROVED		

INCHES — THIRD ANGLE PROJECTION

DO NOT SCALE THIS DRAWING !!!

Invivo Research Inc.
PRECISION BIOMEDICAL INSTRUMENTS
Subsidiary of Invivo Corporation
12601 RESEARCH PARKWAY., ORLANDO, FL 32826

TITLE: ASSEMBLY: AS158
ASSY, ANESTH. AGENT ANALYZER BOARD

CAD SCALE:	SHEET:	DWG. NO.:	REV.:
1 : 1	1 of 1	194C805	L

ECN5877

LF21 REV. A

ITEM / REF. DES.	PART NO.	QTY.	DESCRIPTION
4, D8	D006	2	DIODE, SCHOTTKY, 30V, 200MA
XU18,19	P029	2	SOCKET, 32 PIN DIP, .600 CTR.
U31	ILX26	1	IC, OP AMP, DUAL, OPA2131, SO-8
VR2,3	IR41	2	REGULATOR, POSITIVE LM340LAZ-5
U47	IMX00	1	SRAM, 32K X 8, 200NS, SOW28, 60256
U42	ICX36	1	CONVRTR, 12-BIT D/A, 20 PIN SOIC
U37	IL59	1	SENSOR, TEMP, CENTIGRADE, TO-92

ITEM / REF. DES.	PART NO.	QTY.	DESCRIPTION
U35	ICX37	1	CONVRTR, A/D, 16-BIT, 28 PIN, SOIC
U32,33,34	ILX06	3	IC,MULTIPLXR,CMOS ANALOG,8-CHAN,SO16
U28,30	ILX10A	2	OP AMP, LW DRFT/OFF, JFET, LF4120
U27	ICX32	1	OR GATE, QUAD Z, 74ACT32, 14 PIN SOIC
U12	ICX34	1	HEX INVRTR, (74ACT04) 14 PIN, SOIC
U13,26	ICX38	2	DECODR,/DEMLTPLXR, 74ACT138, SO16
U14,15,29	ICX28	3	IC, F/F, EDG-TRIG, DUAL D, 74ACT74

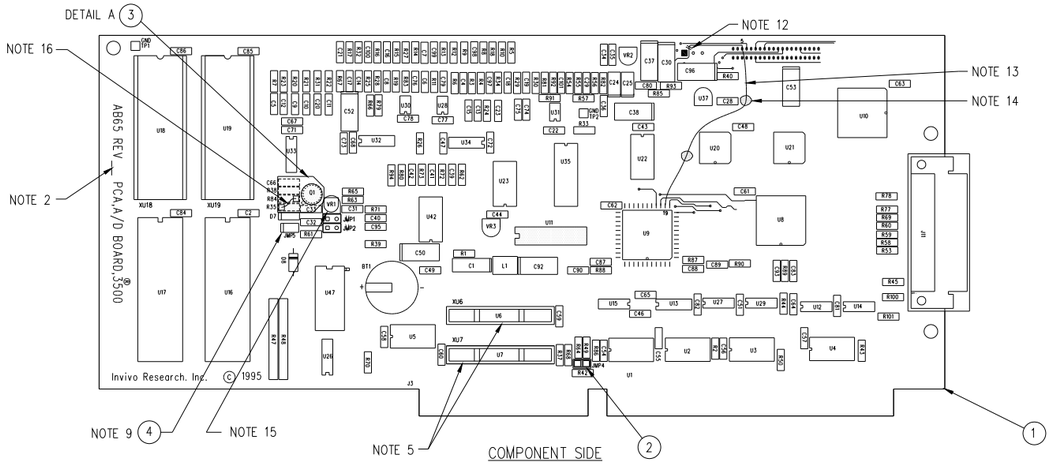

COMPONENT SIDE

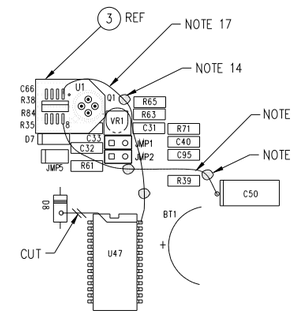

DETAIL A

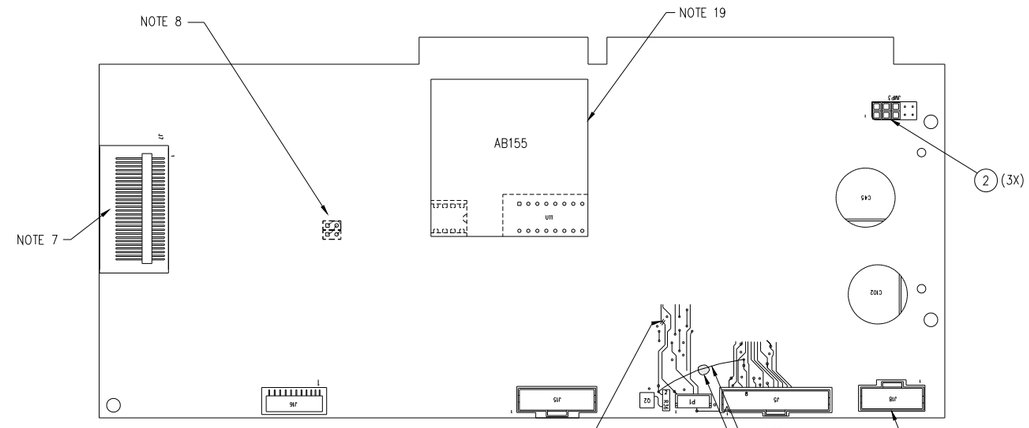

SOLDER SIDE

SEE NOTE 5

ITEM / REF. DES.	PART NO.	QTY.	DESCRIPTION
U16,17,18,19	IM48A	4	I.C. FLASH MEMORY, CMOS, 5V, 4MBIT
U20,21	ICX06	2	TIMER, PROG, INT, PLC28, 82C53
U11	AB155	1	PCA, SOUND GENERATOR MODULE
U9	INX02A	1	I/O, PARALLEL, uPD71055, CMOS 44PLCC
U8,10	INX02	2	I/O, PARALLEL, 8255, CMOS 44PLCC
U4,5	ICX35	2	XCVR, OCTL, BI-DIRECTNL, 20P SOIC
TP1,2	PA00	2	CONN, 1P, SR, HDR, ST, UNSHRD, (.10)
R82	RX148	1	RES, 33.2K, 1%, .125W, 100PPM, 1206
R79,83	RX61	2	RES, 30.1K, 1%, .125W, SMD, 1206
R53,58-60,69, R77,78,81	RX41	8	RES, 200 OHM, 5%, .125W, 200PPM, CHIP
R48	RS45	1	RES, 1.5K, 5%, 200PPM, 9-PIN SIP
R47	RS44	1	RES, 1.8K, 5%, 200PPM, 9-PIN SIP
R91,92	RX105	2	RES, 10K, 1%, .125W, 50PPM, CHIP
R45,86,100,101	RX58	4	RES, 20K, 1%, .125W, SMD, 1206
R44,90	RX147	2	RES, 200 OHM, 1%, .125W, 100PPM, 1206
R40	RX19	1	RES, 2K, 5%, .125W, 200PPM, CHIP
R39	RX136	1	RES, 825 OHM, 1%, .125W, 100PPM,1206
VR1	IR66	1	REGULATOR, 3.3V, TO-92, LT1121CZ
U1,2,3,22,23	ICX87	5	IC, OCTL, 3-STATE XCVR, 74HCT245
R31, R36	RX12	2	RES, 2.2K, 5%, .125W
R7,20-30,32, R33,34,62,72, R73,87-89	RX42	21	RES, 100 OHM, 5%, .125W, 200PPM, CHIP
R5,6,10,11,14 R15,18,19, R56,57,61, R63,65-68,71, R80,85,93,94	RX57	21	RES, 10K, 1%, .125W, SMD, 1206
R3,4,8,9,12,13 R16,17,54,55	RX84	10	RES, 5.1K, 1%, .125W, SMT, 1206
R2,37,42,43 R49,50,64,70	RX141	8	RES, 33 OHM, 5%, .125W, 200PPM, 1206
R1	RX23	1	RES, 1K, 5%, .125W, 200PPM, 1206 CHIP
XU6,7	P030	2	SOCKET, 24 PIN DIP, .300 CTR.
L1	TX01	1	INDUCTOR, 100UH, 100MA, SUR-MOUNT
JMP3	PA37	1	HEADER, UNSH, DR, 10 PIN (.10)
JMP4	PA49	1	HEADER, UNSH, SR, 2 PIN (.10)
J18	PA285	1	CONN, 24P, DR, HDR, SHRD, .050 CTRS.
J16	PA263	1	CONN, 10P, SR, HDR, SHRD, .049
J15	PA286	1	CONN, 30P, DR, HDR, SHRD, .050 CTRS
J11	PA229	1	CONN, 50P, RA, SCKT, ROBINSON NUGENT
J7	PA268	1	CONN, 30P, SR, HDR, RA, .039 CTRS.
J5	PA276	1	CONN, 40P, DR, HDR, SHRD, .050 CTRS
P1	PA294	1	CONN, 3 PIN, SR, HDR,ST,SHRD,.098 CTRS.
C95	CX24	1	CAP, 560pF, 5%, NPO, 50V, 1206, SMD
C89,93	CX06	2	CAP, 10pF, 20%, 50V, COG, CHIP, CER.
C45,102	CA28	2	CAP, 1000uF, 20%, 25V, ALUM. RAD.
C33	CX80	1	CAP, 1uF, 10%, 16V, X5R, CERAMIC, 1206
C30,37,38,50 C52,53,92,96	CXT05	8	CAP, 10uF, 20%, 35V, SIZE D, TANT.
Q2	QX00	1	TRANSISTOR, NPN, SILI, SO23, TYPE 2222
BT1	HB09	1	BATTERY, 3V, LITHIUM
D7	DDX11	1	DIODE, SCHTTKY, BARRIER, 50V, BAS86
C29	CX35	1	CAP, 150pF, 5%, NPO, 50VDC, 1206
C24, 25	CXT13	2	CAP, 2.2uF, 5%, 20V, TANT., SIZE "E", SM
C13,18,19,23	CX28	4	CAP, .015uF, 5%, 50V, 25U, CHIP, CER.
C4,6-8,28, C97-101	CX22	11	CAP, .1uF, 10%, 50V, X7R, 1206 CHIP
C2,5,9-12, C14-17,20-22, C31,32,34,35, C39-44,46-49, C51, 54-68, C71-88, 90	CX07	62	CAP, .1uF, 20%, 50V, 25U, CHIP, CER.
C1	CXT02	1	CAP. 6.8uF, 20%, 35VDC, CHIP, TANT.
3	AB153	1	PCA, NONVOLATILE RAM ADAPTER, 3500
2	PA66	4	SHUNT, 2 POSITION
1	B142	1	PCB, A/D BOARD, 3500, REV. C

NOTES

1. WORKMANSHIP TO CONFORM TO IPC CLASS II REQUIREMENTS.
2. USING INDELIBLE INK IN CONTRASTING COLOR, PLACE CURRENT ASSEMBLY DRAWING REV. IN SPACE PROVIDED.
3. BOARD REQUIRES SERIALIZED LABELING WITH THE FOLLOWING INFORMATION: UNIQUE SERIAL NO., ASSEMBLY P/N & CURRENT REV. LEVEL. PLACE SERIAL NUMBER LABEL ON FLAT SIDE OF J18.
4. COMPONENTS SHOWN AS SHADED ▭ ARE TO BE OMITTED (R35,38,84,Q1 & U11).
5. U6 (AM48) & U7 (AM47) TO BE INSTALLED AT AB65A ASSEMBLY.
6. MAXIMUM COMPONENT HEIGHT OF ANY COMPONENT NOT TO EXCEED .625 .
7. CUT LEADS OF XU18 & U17 FLUSH TO .015 MAX. ABOVE SURFACE OF BOARD UNDER PINS OF J7
8. JUMPER JMP1-1 TO JMP2-2 AND JUMPER JMP2-1 TO JMP1-2. ON THE SOLDER SIDE OF THE BOARD.
9. INSTALL D006 (ITEM 4) IN JMP5 THRU-HOLES ON COMPONENT SIDE.
10. CUT TRACE BETWEEN R36-2 AND U9-19.
11. JUMPER J5-8 AND U9-17 TO R36-2 ON THE SOLDER SIDE OF THE BOARD.
12. CUT TRACE BETWEEN R36-2 AND J5-5.
13. JUMPER J5-5 TO U9-19 ON THE COMPONENT SIDE OF THE BOARD.
14. SECURE JUMPER WIRES TO BOARD USING TAK PAK 382 (M107) AS REQUIRED.
15. INSTALL VR1 (IR66) ROTATED 180° FROM BOARD SILKSCREEN.
16. INSTALL JUMPER WIRE ACROSS PADS OF R35 AND R84 AS SHOWN.
17. AFTER INSTALLING ITEM 3 (AB153), CUT TRACE FROM U47 PIN 28 (COMP. SIDE), AS SHOWN. ADD JUMPER WIRE FROM U47 PIN 28 TO U1 PIN 1 ON AB153 BOARD.
18. ADD JUMPER WIRE FROM U1-8 ON AB153 TO POSITIVE SIDE OF C50 ON AB65.
19. REMOVE JUMPER 1 & 2 FROM AB155. WITH SHIELD BETWEEN AB155 AND AB65, INSERT AB155-P2 CONNECTOR INTO AB65-U11 HOLES MAKING SURE THAT P2-1 MATCHES U11-1 AND SOLDER IN PLACE AS SHOWN.
20. TEST ASSEMBLY TO VERIFY PROPER SOUND GENERATOR OUTPUT.

REV.	DESCRIPTION	BY	DATE
AA	PER ECN #8537	CHY	19NOV01
Y	PER ECN #8362	CHY	12JUL01
W	PER ECN #8181	CHY	22MAR01
V	PER ECN #8193	CHY	7FEB01
U	PER ECN #8127	SR	1DEC00
T	PER ECN #7870	SLC	18JUL00
R	PER ECN #7824	JRH	21JUN00
P	PER ECN #7376	SLC	05OCT99
N	PER ECN #7134	CHY	19APR99
M	PER ECN #6816	KCO	8SEP98
L	PER ECN #6072	SLC	15OCT97
K	PER ECN #5554	JRB	07FEB97
J	PER ECN #5431	SLC	06DEC96
H	PER ECN #5228	CHY	21AUG96
G	PER ECN #5202	SR	02AUG96
F	PER ECN #5129	SLC	01JUL96
E	PER ECN #5039M	JRB	5/17/96
D	PER ECN #5011	CHY	4/26/96
C	REVISED PER ECN #4977	SLC	12APR96
B	REVISED PER ECN #4881M	SLC	14MAR96
A	RELEASED ECN #4631	SLN	11/16/95
02	PROTOTYPE REVISION	SR	8/28/95
01	PROTOTYPE REVISION	SLN	8/12/95

THIS DOCUMENT IS CONFIDENTIAL AND PROPRIETARY AND IS THE SOLE PROPERTY OF INVIVO RESEARCH INCORPORATED (IRI). IT IS NOT TO BE DISCLOSED TO ANY PARTY, REPRODUCED OR USED IN ANY OTHER MANNER WITHOUT WRITTEN CONSENT OF SAID COMPANY. INVIVO MAINTAINS THE RIGHT TO CHANGE SPECIFICATIONS AT ANY TIME WITHOUT PRIOR NOTICE.

UNLESS OTHERWISE SPECIFIED TOLERANCES ARE
.XX = ±
.XXX = ±
ANGLES = ±

DRAWN	SR	8/28/95
DESIGNED	SLN	8/22/95
CHECKED		
APPROVED		

INCHES — THIRD ANGLE PROJECTION

DO NOT SCALE THIS DRAWING !!!

DESCRIPTION

INVIVO RESEARCH, INC.
12601 RESEARCH PARKWAY., ORLANDO, FL 32826

TITLE ASSEMBLY: AB65
PCA, A/D, 3500

CAD SCALE	SHEET	DWG. NO.	REV.
1.5 : 1	1 OF 1	194D638	AA

NOTES

1. WORKMANSHIP TO CONFORM TO IPC CLASS II REQUIREMENTS
2. USING INDELIBLE INK IN CONTRASTING COLOR, PLACE CURRENT ASSEMBLY REV. IN SPACE PROVIDED
3. BOARD REQUIRES SERIALIZED LABELING WITH THE FOLLOWING INFORMATION: UNIQUE SERIAL NO., ASSEMBLY P/N & CURRENT REV. LEVEL PLACE SERIAL LABEL IN THIS AREA – ORIENT AS SHOWN
4. C4 AND C6 TO BE BENT OVER PARALLEL TO PCB AS SHOWN IN DETAIL B IF NECESSARY, PLACE A 1.00 LG. PIECE OF TAPE (ITEM 2) ON THE UNDERSIDE OF C4 & C6 TO HOLD IN PLACE. APPLY CLEAR RTV (ITEM 11) TO SELECTED AREAS PER NOTES TO FASTEN SECURELY TO BOARD
5. ADD ONE DROP OF LOCTITE 425 (M050) TO END OF SCREW BEFORE INSTALLING NUT
6. INSTALL JUMPER WIRE ACROSS PADS AT JMP1
7. MAXIMUM COMPONENT HEIGHT NOT TO EXCEED .815
8. THE "K" INDICATOR ON DIODES DENOTES CATHODE END
9. COMPONENTS SHOWN AS SOLID ARE TO BE OMITTED
10. INSTALL NOISE FILTER AT JP3 – 1 & 2 AS SHOWN IN DETAIL E BEND FERRITE BEAD TOWARD CENTER OF BOARD
11. VERIFY ALL SHADED COMPONENTS ARE REMOVED AND THE BOARD SURFACE IS CLEAN. CUT A 0.50 X 0.50 PIECE OF P/N M000D FOAM TAPE (ITEM 16) AND SECURE IT TO THE TOP OF P/N XC33 CRYSTAL OSC. (ITEM 13). SECURE THE OSCILLATOR UPSIDE DOWN BETWEEN D2 AND D15 AS SHOWN IN DETAIL C. SOLDER P/N CC12 CAPACITOR (ITEM 15) BETWEEN PINS 4 AND 8 OF THE OSCILLATOR AND VERIFY THAT THE LEADS DO NOT TOUCH THE OSCILLATOR CASE. SOLDER P/N R046 RESISTOR (ITEM 14) FROM THE OSCILLATOR PIN 5 TO U10-12 ON THE AB69 AND VERIFY THAT THE LEADS DO NOT TOUCH THE OSCILLATOR CASE. SOLDER P/N W004A JUMPER WIRE (ITEM 17) FROM THE OSCILLATOR PIN 4 TO C35 (THE SIDE TOWARDS THE EDGE OF THE BOARD). SOLDER JUMPER WIRE FROM THE OSCILLATOR PIN 8 TO C35 (THE CLOSEST TO THE CENTER OF THE BOARD) AND SECURE JUMPER WIRES WITH P/N M107 TAK PAK (ITEM 18). SECURE U10-12/R046 LEAD CONNECTION WITH TAK PAK.
12. ON SOLDER SIDE, PLACE P/N WT07 HEAT SHRINK (ITEM 19) OVER BOTH LEADS OF P/N D015 RECTIFIER (ITEM 20). SOLDER CATHODE END OF P/N D015 (ITEM 20) TO Q15, PIN 3 AND ANODE END TO R89, PIN 1 AS SHOWN. ENSURE THAT BOTH LEADS OF P/N D015 (ITEM 20) DO NOT MAKE CONTACT WITH ANY VIAS OR OTHER COMPONENTS. SECURE P/N D015 (ITEM 20) USING P/N M107 ADHESIVE (ITEM 18) AS SHOWN.

ITEM / REF. DES.	PART NO.	QTY.	DESCRIPTION
20	D015	1	RECTIFIER, 1N4935, 200V
19	WT07	A/R	HEAT SHRINK, 3/64" I.D., BLACK
18	M107	REF	ADHESIVE, LOCTITE TAK PAK 382
17	W004A	2.75	30 GAGE WIRE WRAP/ROLL
16	M000D	.50	TAPE,OPN,CL.FM,DS,.13THK.X 1.0W
15	CC12	1	CAP, .1uF, 20%, 50V, 25U, CER.
14	R046	1	RES, 100 OHM, .25W, 5%, CF
13	XC33	1	CRYSTAL, OSCILLATOR, 7.988 MHZ, 5V, 25PPM
12	AS167	1	ASSY., NOISE FILTER, FERRITE BEAD
R8	RX160	1	RES, 62K, .125W, 5%, 200PPM, 1206
11	M008A	REF.	ADHESIVE/SEALANT, RTV, CLEAR, 732
Z1	DZ13	1	ZENER, 1N5246B, 16V, 500MW
U14	IRX06	1	I.C., REG, DL. VLT. SW, 3.3V/+5V, SSOP
U13	ILX09	1	I.C., OP-AMP, DL. LWPWR, SO8, LM358
U11	IR07	1	SG3525AN PULSE WIDTH MODULATOR
U10	ICX03	1	COUNTER, DUAL, DEC, SO16, 74HC390
U6	ICX18	1	I.C., DUAL D FLP-FLP, CD4013BCM
U4	ILX22	1	I.C., OP. AMP, DUAL LW. PWR, CMOS
U3	IL60	1	IC, 8P DIP, AUDIO POWER AMP, LM380
U2	ICX19	1	I.C., QUD. 2-INPT. NAND, CD4093BCM
U1	ICX51A	1	IC, 16P, MULTIVIBRATOR, MONOSTABLE, CMOS
TP1	PA00	1	HEADER, UNSH, SR, 1 PIN (.10)
SW1	S021	1	SW, SLIDE INCA-2
R97	RX203	1	RES, .015 OHM, 10%, 1W, 75PPM, 2010
R96	RX197	1	RES, .05 OHM, 5%, .125W, 400PPM, 2010
R92,93	RX57	2	RES, 10K, 1%, .125W, SMD, 1206
R89	R177	1	RES, .33 OHM, 5%, 1W, M.O.
R86	RX22	1	RES, 6.2K, 5%, .125W, 200PPM, CHIP
10	N002	3	NUT, HEX, #4-40, ZN
9	NS04	3	SCR, #4-40 X 1/4 LG. PHMS-XR, ZN
8	HM50AL	1	HEAT SINK, POWER SUPPLY, 3500
R79	RX53	1	RES, 33K, 5%, .125W, 200PPM
R78	RX20	1	RES, 470 OHM, 5%, .125W, 200PPM, CHIP
R75	RX175	1	RES, 6.81K, 1%, .125W, 100PPM, 1206
R74	RX182	1	RES, 3K, 5%, .125W, 200PPM, 1206
R71	RX123	1	RES, 39 OHM, 5%, .25W, 200PPM, 1206
R76	RX150	1	RES, 4.99K, 1%, .125W, 100PPM, 1206
R58	RX193	1	RES, 9.1K, 5%, .125W, 220V, 1206
R56	RX102	1	RES, 93.1K, .125W, 1%, 100PPM, 1206
R63	RX67	1	RES, 2.0K, .125W, 1%, 1206
R51	RX48	1	RES, 240K, 5%, .125W, 200PPM, CHIP
R20,R45	RX179	2	RES, 2.7K, 5%, .125W, 200PPM, 1206
R40,43	RX96	2	RES, 220K, 5%, .125W, 200PPM, 1206
R39	RX158	1	RES, 150K, 5%, .125W, 200PPM, 1206
R84,98,103	RX42	3	RES, 100 OHM, 5%, .125W, 200PPM, CHIP
R32	RX70	1	RES, 10 OHM, 5%, .125W, 200PPM, 1206
R25	RX180	1	RES, 75K, 5%, .125W, 200PPM, 1206
R22,30,55	RX58	3	RES, 20K, 1%, .125W, SMD, 1206
R16	RX26	1	RES, 10 MEG, 5%, .125W, 200PPM, CHIP
R15	RX186	1	RES, 2.7 OHM, 5%, .125W, 600PPM, 1206
R13,60,91	RX83	3	RES, 1K, 1%, .125W, SMT, 1206
R12,18	RX183	2	RES, 750 OHM, 5%, .125W, 200PPM, 1206
R68	RX115	1	RES, 5.11K, .125W, 1%, 100PPM, 1206
R33	RX101	1	RES, 2.7 OHM. .125W, 5%, 400PPM, 1206
7	PA66	4	SHUNT, 2 POSITION
R27	RX77	1	RES, 680 OHM, 5%, .125W, 200PPM, 1206
R4,7,17,42 R24,26,81 R100,102,115	RX00	10	RES, 100K, 5%, .125W
R38	RX07	1	RES, 15K, 5%, .125W, 1206
R6	RX25	1	RES, 470K, 5%, .125W, 200PPM, CHIP
R19,36,37, R64,77, R80,87,88, R104,110,113, R114	RX40	12	RES, 10K, 5%, .125W, 200PPM, CHIP
R9,65,67,69, R85,90,94	RX12	7	RES, 2.2K, 5%, .125W
R10	RX187	1	RES, 1.5K, 5%, .125W, 200PPM, 1206
R11,14,23, R21,28,82	RX02	6	RES, 1K, 5%, .125W
5	NW31	2	WASHER, .125 ID X .500 OD X .062 THK, NY
4	N009	2	NUT, HEX, #4-40, NY
3	NS21	2	SCREW, #4-40 X 3/4" LG, PHMS-NY
R2,5,31,44,61,72	RX08	6	RES, 4.7K, 5%, .125W
R1,3,34,35,41	RX01	5	RES, 1 MEG, 5%, .125W
Q17,18,24,26	QX09	4	TRANS, N-CHNL, POWER MOSFET, SO-8
Q15,23	Q036	2	TIP120 NPN DARLINGTON
Q14	Q003	1	TRANS, FET, N-CHNL, TO-92, VN10KM
Q8	QX13	1	TRANS, N-CHNL,ENHANCEMENT-MODE MOS
Q5	QX01	1	TRANS, PNP,SILI, SO23, TYPE 2907A
Q4,16	Q026	2	D44H11 NPN SILICON POWER PAK
Q2,3,22	QX08	3	TRANS, NPN DARLINGTON, SOT23
Q1,6,7,11,12 Q13,25,28-30	QX00	10	TRANS, NPN, SILI, 2023, TYPE 2222
P10	PA49	1	HEADER, UNSH, SR, 2 PIN (.10)
P9	PA268	1	CONN, 30P, SR, HDR, RA, .039 CTRS.
P8	PA271	1	CONN, 16P, DR, HDR, ST, .079 CTRS.
P6	PA284	1	CONN, 20P, DR, HDR, SHRD, .050 CTRS.
P5,7	PA272	2	CONN, 10P, SR, HDR, ST, SHRD, (.098)
P4	PA249	1	HEADER, UNSHD, SR, 2 PIN (.156)
P3	PA29	1	HEADER, UNSHD, SR, 3 PIN, (.156)
P2,11	PA291A	2	CONN, 8P, SR, HDR, ST, .100 CTRS.
P1	PA194	1	CONN, 2P, SR, HDR, ST, .098 CTRS.
L8,11,12,13	T058	4	BEAD, .370 FERRITE, LEADED, 22 GA
L9,10	T063	2	INDUCTOR, 16uH, POT CORE
JP1-5	PA08	5	HEADER, UNSH, SR, 3 PIN, (.10)
D11	D009	1	DIODE, GENERAL PURPOSE, 1N5818
D42	DZ04	1	ZENER, 1N753A, 6.2V, 5%, 500MW
D36,37,46	D008	3	DIODE, SCHOTTKY, 1 AMP, 40V
D34,35	D015	2	RECTIFIER, 1N4935, 200V
D27,41	D003	2	DIODE, SCHOTTKY, 1N5711
D24	D006	1	DIODE, SCHOTTKY, 30V, 200MA
D14,15,16	D000	3	DIODE, SIGNAL, 1N4148
D19,31	DZ20	2	TRANSORBE, SA30A, 30V
D9	DZ02	1	ZENER, 1N750A, 4.7V, 500MW
D4,5,12	D001	3	DIODE, 1N4001
D3,8,13	D030	3	DIODE, SCHOTTKY, 7.5 AMP, 45V
D1,2,6,7,10,22, D28,29,32,33, D38,39,43, D47,48,49	DDX01	16	DIODE, SIGNAL, LEADLESS, 500MW
C78,79	CT26	2	CAP, 22uF, 10%, 50V, RADIAL, TANT.
C77,92	CX09	2	CAP, 100pF, 10%, 50V, COG, CHIP, CER.
C60,95	CXT12	2	CAP, 4.7uF, 20%, 16V, TANT, 3528 PKG
C28,54,73,75	CX13	4	CAP, .001uF, 10%, 50VDC, X7R, CHIP
C53	CX31	1	CAP, 2200pF, 10%, 50V, X7R, 0805, CHIP
C10,52,76,87	CX37	4	CAP, 20uF, 10%, 50V, COG, CER, 1206
C98	CX44	1	CAP, .33UF,+80%, -20%, Y5V, 50V, 1206
C25,27,50, C69,96,97	CXT04	6	CAP, 1uF, 20%, 35VDC, CHIP, TANT.
C22	CXT02	1	CAP, 6.8uF, 20%, 35V, CHIP, TANT.
C20	CX08	1	CAP, .0068uF, 5%, 50V, X7R, CHIP, CER.
C15,18	CXT11	2	CAP, 68uF, 20%, 10V, SIZE D, TANT.
C13,31	CXT05	2	CAP, 10uF, 20%, 35V, SIZE D, TANT.
C12,74,80, C81,82	CA34	5	CAP, 220uF, 20%, 10V, ALUM, RAD.
C83,84	CX29	2	CAP, .1uF, 5%, 50V, X7R, 1206, CHIP
C4,6	CA36	2	CAP, 4700uF, 20%, 25V, MINI, ALUM, RAD.
C3,5,29, C70,85,88	CX11	6	CAP, .01uF, 10%, 50V, CHIP, CER.
C2,7,8,9, C11,14,16,17, C21,35, C55,58,61-68, C71,72,91	CX22	23	CAP, .1uF, 10%, 50V, X7R, 1206 CHIP
C1	CT23	1	CAP, 47uF, 10%, 35V, TANT.
2	M004	2.0	TAPE, ACRYLIC, DS, .010 THK., x .50 WD.
1	B145	1	PCB, POWER SUPPLY, 3500 REV. D

REV.	DESCRIPTION	BY	DATE	REV.	DESCRIPTION	BY	DATE	REV.	DESCRIPTION	BY	DATE	REV.	DESCRIPTION	BY	DATE
				Y	PER ECN #8564	CHY	28NOV01	L	PER ECN #6213M	SLC	25NOV97	C	PER ECN #4882M	SLC	13MAR96
				W	PER ECN #8362	CHY	13JUL01	K	PER ECN #5673M	JRB	14APR97	B	PER ECN #4832	JRB	2/16/96
				V	PER ECN #8378	JRH	26JUN01	J	PER ECN #5435	SLC	09JAN97	A	RELEASED, ECN #4631	SLN	11/14/95
				U	PER ECN #7480	CHY	14SEP00	H	PER ECN #5434	SLC	06JAN97	02	PROTOTYPE REVISION	SR	8/28/95
AD	PER ECN #9017	CHY	28AUG02	T	PER ECN #7480	CHY	11JAN00	G	PER ECN #5312	CHY	26SEP96	01	PROTOTYPE REVISION	SLN	8/12/95
AC	PER ECN #8917	CHY	24JUN02	R	PER ECN #7244	KCO	22JUL99	F	PER ECN #5199	SR	02AUG96	REV.	DESCRIPTION	BY	DATE
AB	PER ECN #8676	CHY	8APR02	P	PER ECN #7129	CHY	31MAR99	E	PER ECN #5156	SLC	15JUL96				
AA	PER ECN #8744	CHY	21MAR02	M	PER ECN #6215	SLC	29NOV97	D	PER ECN #4854	JRB	4/18/96				

THIS DOCUMENT IS CONFIDENTIAL AND PROPRIETARY AND IS THE SOLE PROPERTY OF INVIVO RESEARCH INCORPORATED (IRI). IT IS NOT TO BE DISCLOSED TO ANY PARTY, REPRODUCED OR USED IN ANY OTHER MANNER WITHOUT WRITTEN CONSENT OF SAID COMPANY. INVIVO RESEARCH INC. MAINTAINS THE RIGHT TO CHANGE SPECIFICATIONS AT ANY TIME WITHOUT PRIOR NOTICE.

UNLESS OTHERWISE SPECIFIED TOLERANCES ARE
.xx = ± .02
.xxx = ± .010
ANGLES = ± 1°

INCHES — THIRD ANGLE PROJECTION

DO NOT SCALE THIS DRAWING !!!

DRAWN	SR	8/30/95
DESIGNED	SLN	8/22/95
CHECKED		
APPROVED		

INVIVO RESEARCH, INC.
12601 RESEARCH PARKWAY., ORLANDO, FL 32826

TITLE: ASSEMBLY: AB69
PCA, POWER SUPPLY, 3500

CAD SCALE:	SHEET:	DWG. NO.:	REV.:
2 : 1	1 of 2	194D651	AD

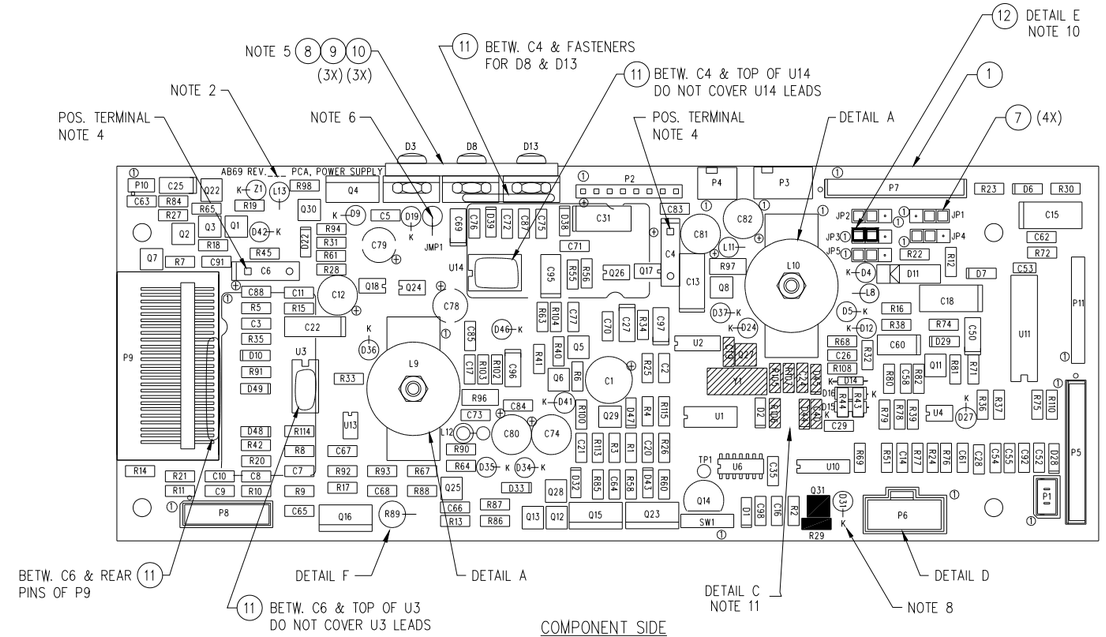

COMPONENT SIDE

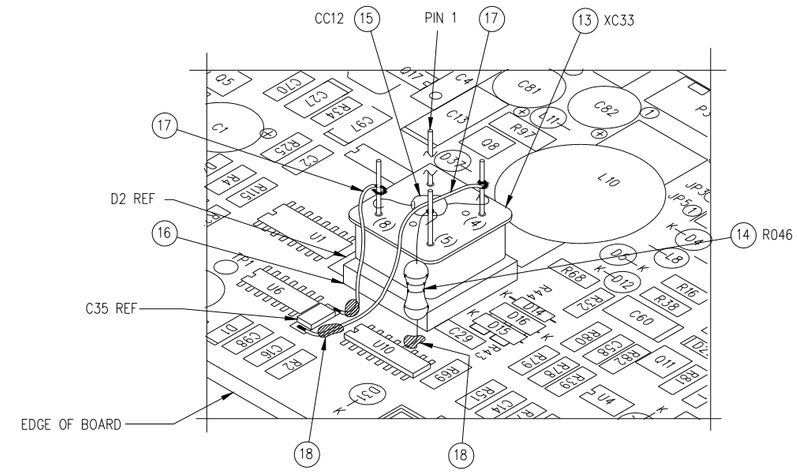

DETAIL C
NOTE 11
SCALE: NONE
COMPONENTS NOT SHOWN FOR CLARITY

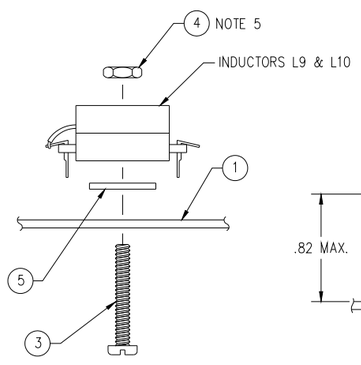

DETAIL A

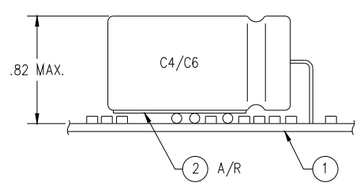

DETAIL B
NOTE 4

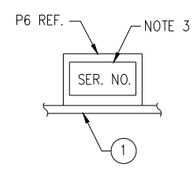

DETAIL D

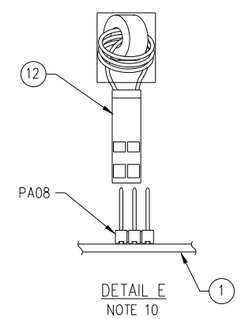

DETAIL E
NOTE 10

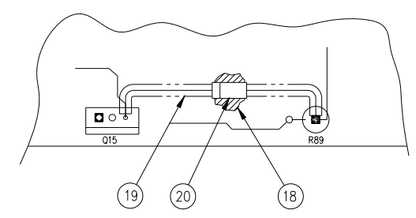

DETAIL F
SOLDER SIDE
NOTE 12

UNLESS OTHERWISE SPECIFIED TOLERANCES ARE			
.XX = ± .03	DRAWN	SR	8/30/95
.XXX = ± ---	DESIGNED	SLN	8/22/95
ANGLES = ± ---	CHECKED		
	APPROVED		

INCHES — THIRD ANGLE PROJECTION

DO NOT SCALE THIS DRAWING !!!

INVIVO RESEARCH, INC.
12601 RESEARCH PARKWAY., ORLANDO, FL 32826

TITLE: ASSEMBLY: AB69
PCA, POWER SUPPLY, 3500

CAD SCALE:	SHEET:	DWG. NO:	REV:
2 : 1	2 of 2	194D651	AD

ECN8242

LF21 REV. B

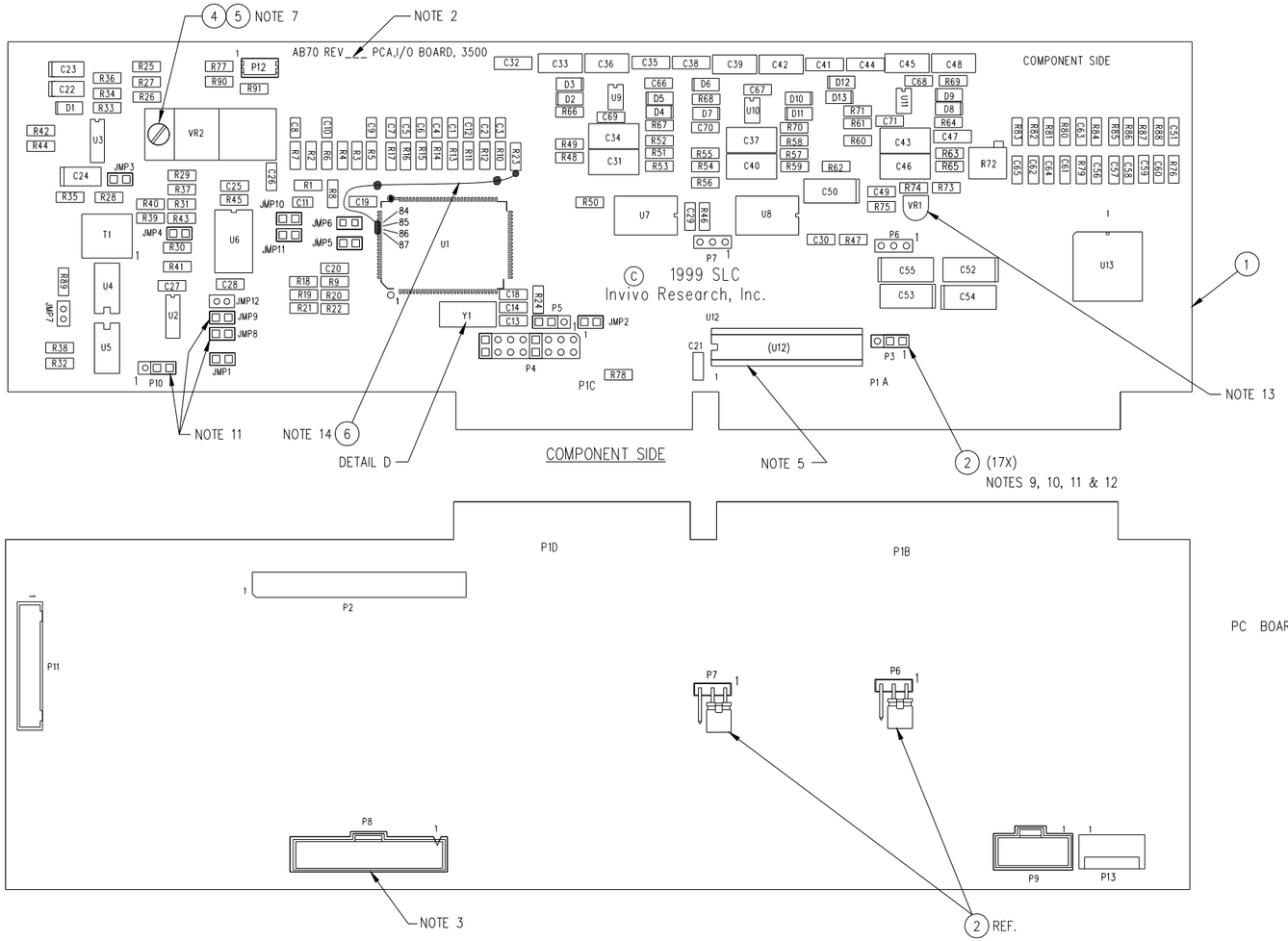

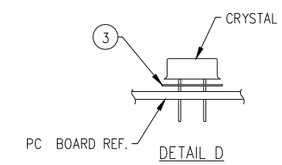

NOTES

1. WORKMANSHIP TO CONFORM TO IPC CLASS II REQUIREMENTS.
2. USING INDELIBLE INK IN CONTRASTING COLOR, PLACE CURRENT ASSEMBLY REV. IN SPACE PROVIDED.
3. BOARD REQUIRES SERIALIZED LABELING WITH THE FOLLOWING INFORMATION: UNIQUE SERIAL NO., ASSEMBLY P/N & CURRENT REV. LEVEL. PLACE SERIAL NUMBER LABEL ON FLAT SIDE OF P8.
4. MAXIMUM COMPONENT HEIGHT OF ANY COMPONENT NOT TO EXCEED .580 UNLESS OTHERWISE NOTED.
5. U12 (AM45) TO BE INSTALLED AT FINAL ASSEMBLY.
6. LAY OVER C31, 34, 37, 40, 43 AND 46 TOWARDS TOP OF BOARD AS MUCH AS COMPONENTS WILL ALLOW. LAY OVER C32, 35, 38, 41, 44, & 47 TOWARDS THE CENTER OF THE BOARD. PREP COMPONENT LEADS TO 90° TO ALLOW COMPONENT BODY TO LAY PARALLEL TO BOARD SURFACE. HEIGHT NOT TO EXCEED .250.
7. APPLY LOCTITE #425 (M050) TO THREADS.
8. FOR NORMAL COMMUNICATION CONFIGURATION, INSTALL ALL P/N PA318B SHUNTS (ITEM 2) AS SHOWN.
9. FOR SpO2 UNITS, REMOVE P/N PA318B SHUNTS (ITEM 2) FROM JMP10 AND JMP11.
10. FOR 3500CT UNITS, REMOVE P/N PA318B SHUNT (ITEM 2) FROM JMP3 AND JMP6. INSTALL P/N PA318B SHUNT (ITEM 2) AT JMP12.
11. FOR TELEMETRY UNITS, REMOVE P/N PA318B SHUNT (ITEM 2) FROM P10, PINS 2 & 3, AND INSTALL P/N PA318B SHUNT (ITEM 2) AT P10, PINS 1 & 2. REMOVE P/N PA318B SHUNTS (ITEM 2) FROM JMP8 AND JMP9.
    FOR 3156-1 OR 3155MVS-4-1 HARDWIRE OPTION, INSTALL P/N PA318B (ITEM 2) ON P10, PINS 2 & 3; JMP8, PINS 1 & 2 AND JMP9, PINS 1 & 2.
12. SHUNTS ARE TO BE CONFIGURED AT FINAL ASSEMBLY.
13. BEND VR1 TOWARDS REAR OF BOARD TO ALLOW MAX. CLEARANCE.
14. USE SOLDER TO SHORT U1, PINS 84, 85, 86 & 87 TOGETHER. SOLDER P/N W004A JUMPER WIRE (ITEM 6) FROM R23 (SIDE CLOSEST TO U1) TO U1 PINS 84, 85, 86 & 87. SECURE WIRE WITH TAK-PAK AS SHOWN.

ITEM / REF. DES.	PART NO.	QTY.	DESCRIPTION
6	W004A	A/R	WIRE, 30 GA., WRAP/ROLL
R42, 44	RX12	2	RES., 2.2K, 5%, .125W, 250PPM, 1206
C51	CX35	1	CAP., 150pF, 5%, 50V, NPO, 1206, CER.
P6,P7	PA393	2	CONN, 3P, SR. HDR, RA, .UNSHD., .100 CTRS
P13	PA287	1	CONN, 5P, SR, HDR, RA, .049 CTRS
5	N002	1	NUT, HEX, #4-40, ZINC
4	NS78	1	SCREW, #4-40 X 5/16 FHMS, ZINC

ITEM / REF. DES.	PART NO.	QTY.	DESCRIPTION
R77	RX120	1	RES, 3.92K, .125W, 1%, 100 PPM, 1206
P12	PA348	1	CONN, 2P, HDR, ST, (.098)
VR2	IR55	1	REGULTR,AJUSTBL,LW DROP-OUT,LM2941C
P11	PA349	1	CONN,12P,HDR,SR,HIROSE DF3 TYPE (.079)
Y1	XC20	1	CRYSTAL, 24 MHZ
VR1	IR09	1	REGULATOR, POSITIVE, LM317LZ
U13	INX02	1	I/O, PARALLEL, 8255, CMOS, 44PLCC
U9-11	ILX09	3	IC, OP-AMP, DL. LWPWR, SO8, LM358
U7-8	ILX20	2	IC, CNVTR, (ILX20A-MAXIM ONLY)
U6	ICX31	1	IC, RS232 DRV/RCV, W/SHON, LT1039
U4-5	IL65	2	I.C., 8P, DUAL OPTO ISOLATOR, MCT62
U3	ICX40	1	ISO RS232 DRVR, MAX251, 14P, SOIC
U2	ICX41	1	ISO RS232 DRVR, MAX250, 14P, SOIC
U1	ICX43	1	CNTRLR, I/O-PERIPH, 82C735, 80SMT
XU12	P032	1	SOCKET, 24 PIN DIP, LOW-PROFILE, .300
T1	T048	1	TRANSFORMER, SERIAL ISO, BH MINI
R74	RX147	1	RES, 200 OHM, 1%, .125W, 100PPM, CH
R73	RX121	1	RES, .499 OHM, 1/4W, 1%, 100PPM, 1206
R72	RP71	1	RES, POT, 200 OHM, 10%, .25W, CERM
R66-71,76	RX42	7	RES, 100 OHM, 5%, 1/8W, 200PPM, 1206
R90	RX153	1	RES, 619 OHM, .125W, 1%, 100 PPM, 1206
R50,53,56,59, R62,65	RX140	6	RES, 12.1K, 1/8, 1%, 100PPM, 1206
R48,49,51,52, R54,55,57,58, R60,61,63,64	RX158	12	RES, 150K, 5%, 1/8W, 200PPM, 1206
R46-47	RX70	2	RES, 10 OHM, 5%, 1/8W, 200PPM, 1206
R45	RX50	1	RES, 22K, 5%, .125W, 200PPM, CHIP
R33-36,39-41, R43,78, 91	RX58	10	RES, 20K, 1/8W, 1%, 100PPM, 1206
R89	RX84	1	RES, 5.1K, .125W, 1%, 1206
R25-31,37	RX24	8	RES, 22 OHM, +/-5%, .125W, 200PPM, CP
R23	RX170	1	RES, 150 OHM, 1/4W, 5%, 200PPM, 1206
R18-22,32,38	RX23	7	RES, 1K, 5%, .125W, 200PPM, CHIP
R10-17,75, R79-88	RX91	19	RES, 220 OHM, 5%, 200PPM, 1/8W, 1206
R5-8	RX141	4	RES, 33 OHM, 1/8W, 5%, 200PPM, 1206
R1-4,9,24	RX08	6	RES, 4.7K, .125W, +/-5%
P9	PA284	1	CONN, 20P, DR, HDR, SHRD, .050 CTRS
P8	PA276	1	CONN, 40P, DR, HDR, SHRD, .050 CTRS
P4	PA385	1	CONN, 16P, DR, HDR, ST, UNSHRD, .100 CTR
P3,5,10	PA387	3	CONN, 3P, SR, HDR, ST, UNSHRD, .100 CTR
P2	PA386	1	CONN, 34P, DR, HDR, ST, UNSHRD, .100 CTR
JMP1-12	PA318A	12	CONN, 2P, SR, HDR, ST, .100 LP, GOLD
D1-13	DDX01	13	DIODE, SIGNAL, LEADLESS, 500MW
C56-65	CX13	10	CAP, .001UF, 10%, 50VDC, X7R, CHIP
C50,52-55	CXT05	5	CAP, 10UF, 20%, 35V, SIZE-D, TANT
C33,36,39,42, C45,48	CP31	6	CAP, .033UF, 5%, 50V, POLYEST
C32,35,38,41, C44,47	CP07	6	CAP, .01UF, 2%, 50V, POLYEST
C31,34,37,40, C43,46	CP36	6	CAP, .33UF, 5%, 50VDC, POLYESTER
C24	CXT12	1	CAP, 4.7UF, 20%, 16V, TANT, 3528 PKG
C18-21,25-30, C49,66-71	CX22	17	CAP, .1UF, 10%, 50V, X7R, 1206, CHIP
C22,23	CXT04	2	CAP, 1uF, 20%, 35VDC, CHIP, TANT.
C13,14	CX25	2	CAP, 22PF, 5%, X7R, 50V, 1206
C1-12	CX31	12	CAP, 2200PF, 10%, 50V, X7R, 0805, CHIP
3	HI37	1	INSULATOR, CRYSTAL, MYLAR
2	PA318B	17	SHUNT, 2P, .100 CTRS, LOW PROFILE
1	B146	1	PCB, MULTI-FUNCTION I/O, 3500 REV. G

NOTE 5 (REF)

REV.	DESCRIPTION	BY	DATE	REV.	DESCRIPTION	BY	DATE	REV.	DESCRIPTION	BY	DATE	REV.	DESCRIPTION	BY	DATE
				V	PER ECN #7475	CHY	27DEC99	L	PER ECN #5598M	SLC	26FEB97	D	PER ECN #4895	JRB	3/20/96
AD	PER ECN #7930	CHY	11JUN01	U	PER ECN #7375	SLC	17SEP99	K	PER ECN #5564	SLC	11FEB97	C	PER ECN #4827	SLC	2/23/96
AC	PER ECN #8313	CHY	10MAY01	T	PER ECN #7009	CHY	22JAN99	J	PER ECN #5455	SLC	20DEC96	B	PER ECN #4745	JRB	1/17/96
AB	PER ECN #8181	CHY	22MAR01	R	PER ECN #6966	CHY	9DEC98	H	PER ECN #5415	SLC	25NOV96	A	RELEASED, ECN #4695	SLC	12/18/95
AA	PER ECN #8255	CHY	13MAR01	P	PER ECN #6772	ALH	10AUG98	G	PER ECN #5200	RHK	01AUG96				
Y	PER ECN #7860	CHY	19DEC00	N	PER ECN #5718M	CHY	12MAY97	F	PER ECN #5163M	SLC	17JUL96				
W	PER ECN #7663	CHY	22MAY00	M	PER ECN #5599	SLC	26FEB97	E	PER ECN #4972M	CHY	4/16/96				

THIS DOCUMENT IS CONFIDENTIAL AND PROPRIETARY AND IS THE SOLE PROPERTY OF INVIVO RESEARCH INCORPORATED (IRI). IT IS NOT TO BE DISCLOSED TO ANY PARTY, REPRODUCED OR USED IN ANY OTHER MANNER WITHOUT WRITTEN CONSENT OF SAID COMPANY. INVIVO MAINTAINS THE RIGHT TO CHANGE SPECIFICATIONS AT ANY TIME WITHOUT PRIOR NOTICE.

UNLESS OTHERWISE SPECIFIED TOLERANCES ARE
.XX = ±
.XXX = ±
ANGLES = ±

DRAWN	R. KEMP	11/8/95
DESIGNED	SLN	11/8/95
CHECKED		
APPROVED		

INCHES — THIRD ANGLE PROJECTION

DO NOT SCALE THIS DRAWING !!!

Invivo Research Inc.
PRECISION BIOMEDICAL INSTRUMENTS
12601 RESEARCH PARKWAY., ORLANDO, FL 32826

TITLE ASSEMBLY: AB70
PCA, MULTI-FUNCTION I/O, 3500

CAD SCALE	SHEET	DWG. NO.	REV.
2:1	1 of 1	194D652	AD

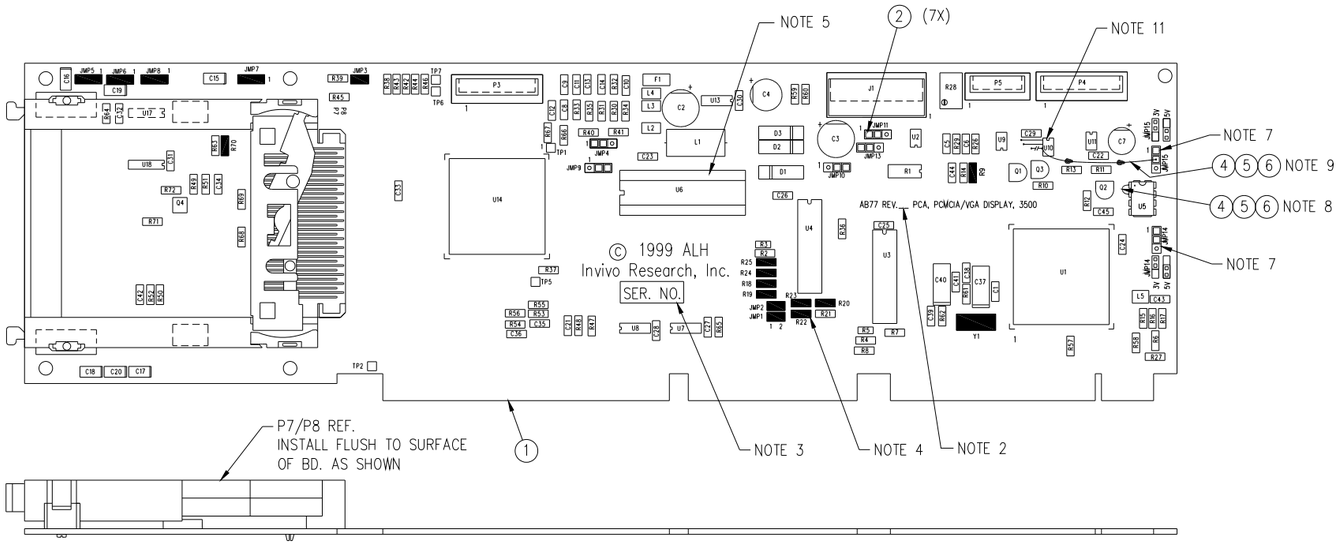

P7/P8 REF.
INSTALL FLUSH TO SURFACE
OF BD. AS SHOWN

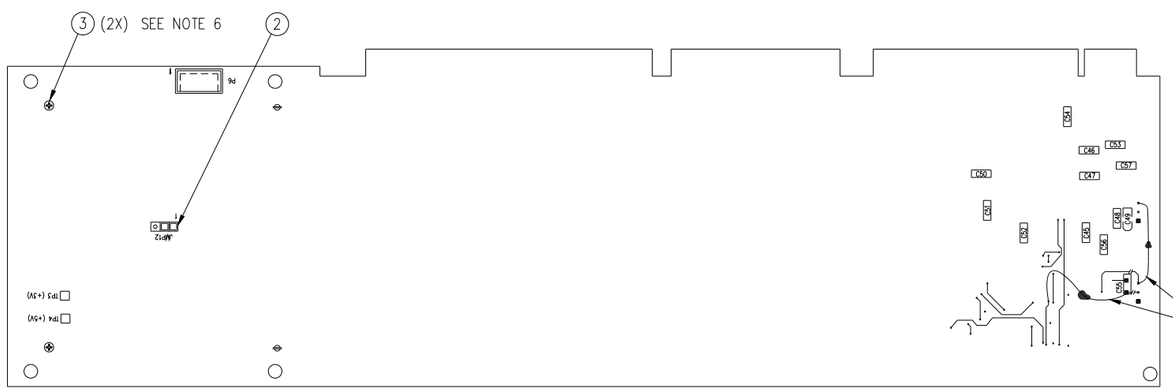

NOTE 5

NOTES

1. WORKMANSHIP TO CONFORM TO IPC CLASS II REQUIREMENTS
2. USING INDELIBLE INK IN CONTRASTING COLOR, PLACE CURRENT ASSEMBLY REV. IN SPACE PROVIDED
3. BOARD REQUIRES SERIALIZED LABELING WITH THE FOLLOWING INFORMATION: UNIQUE SERIAL NO., ASSEMBLY P/N & CURRENT REV. LEVEL. PLACE SERIAL NUMBER LABEL IN THIS AREA– ORIENT AS SHOWN
4. COMPONENTS SHOWN AS SOLID ARE TO BE OMITTED
5. U6 TO BE INSTALLED AT FINAL ASSEMBLY
6. ADD ONE DROP OF LOCTITE 425 (M050) TO SCREW THREADS BEFORE INSTALLING SCREW.
7. JUMPER SETTINGS FOR JMP14 AND JMP15.
   FOR 3V DISPLAY JUMPER PINS 1 AND 2 (DEFAULT SETTING)
   FOR 5V DISPLAY JUMPER PINS 2 AND 3
8. IF U5–2 IS LIFTED, REMOVE P/N W004A JUMPER WIRE (ITEM 4) FROM R11 AND U5–2. CONNECT U5–2 AND U5–1 WITH P/N W004A JUMPER WIRE (ITEM 4) AND SECURE WITH P/N M107 ADHESIVE (ITEM 5) & P/N M019 ACCELERATOR (ITEM 6).
   IF U5–2 IS NOT LIFTED, DO NOT ADD P/N W004A JUMPER WIRE (ITEM 4) FROM U5–2 TO U5–1.
9. CUT TRACE AT U10–3 AS SHOWN. CONNECT P/N W004A JUMPER WIRE (ITEM 4) TO U10–3 AND JMP15–2. VERIFY THE JUMPER WIRE IS CONNECTED NEAR THE BOTTOM OF JMP15–2, ALLOWING A SHUNT TO BE INSTALLED. SECURE JUMPER WIRE WITH P/N M107 ADHESIVE (ITEM 5) AND P/N M019 ACCELERATOR (ITEM 6).
10. CUT TRACES AT JMP15–2 AND JMP15–3 AS SHOWN. CONNECT P/N W004A JUMPER WIRE (ITEM 4) FROM JMP15–3 TO JMP14–3. CONNECT ANOTHER JUMPER WIRE FROM C55 TO TRACE AS SHOWN. SECURE JUMPER WIRES WITH P/N M107 ADHESIVE (ITEM 5) AND P/N M019 ACCELERATOR (ITEM 6).
11. CAREFULLY LIFT PIN 1 ON U10 AWAY FROM PAD AND VERIFY ELECTRICAL CLEARANCE. SECURE USING P/N M107 ADHESIVE (ITEM 5).

JUMPER SETTINGS

DISPLAY	3500 OPTION	JMP10*	JMP13
1. ACTIVE	3503–1	NOT USED	NOT USED
2. EL	3503–2	NOT USED	2–3
3. PASSIVE	3503–3	NOT USED	1–2 (+12SAFE) (VCON)

* ENGINEERING NOTES FOR OLDER PASSIVE PANELS THAT USE VEE:
1. JMP10 POSITION 2–3 IS +27V (+VEE)
2. JMP10 POSITION 1–2 IS –27V (–VEE)
3. IF JMP10 IS USED, JMP13 IS NOT USED.

ITEM / REF. DES.	PART NO.	QTY.	DESCRIPTION
U10	QX20	1	IC, TRANS, DUAL, P–CH, MOSFET, SO–8, SI9933
6	M019	A/R	ACCELERATOR, TAC PAK, LOCTITE, 710
5	M107	A/R	ADHESIVE, LOCTITE TAK PAK 382
4	W004A	A/R	30 GAGE WIRE WRAP/ROLL

REV.	DESCRIPTION	BY	DATE
L	PER ECN #7899	CHY	25AUG00
K	PER ECN #7346	ALH	23AUG99
J	PER ECN #6571	CHY	3JUN98
H	PER ECN #6139	KCO	30DEC97
G	PER ECN #5660	CHY	29APR97
F	PER ECN #5302	KCO	17SEP96
E	PER ECN #5277	SLC	6SEPT96
D	PER ECN #5201	RHK	02AUG96
C	PER ECN #5128M	SLC	28JUN96
B	PER ECN #4743	SLC	1/12/96
A	RELEASED, ECN #4670		12/12/95

REV.	DESCRIPTION	BY	DATE
P	PER ECN #8864	CHY	17MAY02
N	PER ECN #8348	CHY	29MAY01
M	PER ECN #8269	CHY	15MAR01

THIS DOCUMENT IS CONFIDENTIAL AND PROPRIETARY AND IS THE SOLE PROPERTY OF INVIVO RESEARCH INCORPORATED (IRI). IT IS NOT TO BE DISCLOSED TO ANY PARTY, REPRODUCED OR USED IN ANY OTHER MANNER WITHOUT WRITTEN CONSENT OF SAID COMPANY. INVIVO MAINTAINS THE RIGHT TO CHANGE SPECIFICATIONS AT ANY TIME WITHOUT PRIOR NOTICE.

ITEM / REF. DES.	PART NO.	QTY.	DESCRIPTION
C57	CX35	1	CAP, 150pF, 5%, 50V, NPO, 1206
U5	IR65	1	IC, VOLTAGE REG., 3.3V, DIP8
C49	CXT22	1	CAP, 10UF, 10%, 10V, TANT., 3216
F1	FU17	1	FUSE, 500mA, .125W
C43,44	CX06	2	CAP, 10PF, 20%, 50V, C0G, 1206, CER.
L5	TX08	1	INDUCTOR, 0.47uH, 20%, 1210
Q4	QX00	1	TRANS, NPN, SILI, SO23, TYPE 2222
R72	RX19	1	RES, 2K, 5%, .125W, 200PPM, CHIP
3	NS94	2	SCREW, M2 X 12 PHMS–XR
C15–20	CXT04	6	CAP, 1UF,20%, 35V, TANTALUM CHIP
U14	ICX45	1	CONTROLLER PC SOCK. VGA–469
L2,3,4	TX05	3	INDUCTOR, 5.6uH, 10%, 100mA, SMT
U3,4	IMX04	2	IC, DRAM, 256K x 16 BIT, SOJ–40
L1	T027	1	COIL, 220uH
U17,18	ICX48	2	IC, INTRFC.SW, PCMCIA, SO–16
R42–46,63, R64	RX17	7	RES, 100K, 1%, .125W, 200 PPM, CHIP
R29	RX189	1	RES, 301K, 1%, .125W, 100 PPM, 1206
R15–17	RX170	3	RES, 150 OHM, 5%, .25W, 200 PPM, 1206
R3,5	RX165	2	RES, 1 OHM, 5%, .1W, 200 PPM, 0805
R8,51–54	RX163	5	RES, 100 OHM, 1%, .125W, 100 PPM CHP
R7,27,30–33 36,48, 59–60	RX141	10	RES, 33 OHM, 5%, .125W, 200 PPM, 1206
R47,61,62	RX70	3	RES, 10 OHM, 5%, .125W, 200 PPM, 1206
R6	RX58	1	RES, 20K, 1%, .125W, SMD 1206
R10,12,13,49 50,55–57, 65–69	RX57	13	RES, 10K, ±1%, .125W, SMD 1206
R26	RX52	1	RES, 8.2K, 5%, .125W, 200 PPM
R58	RX47	1	RES, 270 OHM, 5%, .125W, 200 PPM CP
R11,14	RX18	2	RES, 49.9K, 1%, .125W, 200 PPM CHIP
R21,37–41,71	RX08	7	RES, 4.7K, ±5%, .125W
R2,4,34,35	RX01	4	RES, 1 MEG., ±5%, .125W
R1	RNX01	1	RES. NTWK, 33 OHM X 8,2%,100PPM
R28	RP63	1	RES, POT, 50K, ±10%, .5W, 20T,TRIM
U11	QX12	1	IC, TRANS, DUAL P–CH, MOSFET, SO–8
U2	QX11	1	IC, TRANS, DUAL N–CH, MOSFET, SO–8
Q1–3	Q020	3	XSTR., TO–92, 2N3904 NPN
J1	PA290	1	CONN, 26P, DR.HDR, RA, SHRD, .079
P7/P8	PA260	1	RCPT., PCMCIA MEM. CARD., 2 SLOT
P6	PA287	1	CONN, 5P, SR.HDR, RA, .049 CTRS.
P5	PA263	1	CONN, 10P, SR.HDR, RA, SHRD, .049
P3,4	PA261	2	CONN, 15P, SR.HDR, RA, SHRD, .049
U9	IRX05	1	IC, REGULATOR, 10W, CMOS, SO–8
JMP4, 9–15	PA08	8	HEADER, UNSH, SR.3P, (.10)
2	PA66	8	SHUNT, 2 POSITION, .10 CTRS.
TP1–7	PA00	7	CONN, 1P, SR. HDR, ST, UNSHRD, (.10)
XU6	PO26	1	SCKT, 28P DIP, LO–PRO, .10 CTRS.
U13	ICX47	1	IC, QUAD BUFFER, 14P, SOIC, 74ACT
U1	ICX46	1	IC, VGA CNTRLR, SQFP, 65545, 208P
U8	ICX33	1	NAND GATE, QUA, 74ACT00, 14P, SOIC
U7	ICX32	1	OR GATE, QUADZ, 74ACT32, 14P, SOIC
D1–3	D015	3	RECTIFIER, 1N4935, 200V
C37,40	CXT01	2	CAP, 47uF, 20%, 10VDC, CHIP, TANT
C8–10	CX34	3	CAP, 220pF, 5%, 50V, NPO, 1206, SMD
C11,14	CX30	2	CAP, .001uF, 5%, 50V, C0G, 1206, CHP.
C12,13	CX25	2	CAP, 22pF, 5%, 50V, X7R, 1206, SMD
C1,5,22–33,38 39,41,45–48 C50–56	CX22	28	CAP, .1uF, 10%, 50V, X7R, 1206, CHP.
C6,21	CX11	2	CAP, .01uF, 10%, 50V, X7R, CHP, CER.
C34–36,42	CX09	4	CAP, 100pF, 10%, 50V, C0G, CHP, CER.
C4	CT24	1	CAP, 10uF, 10%, 50V, RAD, TANT.
C2,3	CA39	2	CAP, 100uF, 20%, 63V, AL, RAD, 10x12
C7	CA06	1	CAP, 100uF, 20%, 35V, AL, RAD.
1	B156	1	PCB, PCMCIA/VGA DISPLAY, REV. D

DRAWN	CHY	8/1/95	
DESIGNED	SLN	8/1/95	
CHECKED			
APPROVED			

UNLESS OTHERWISE SPECIFIED TOLERANCES ARE
.XX = ±
.XXX = ±
ANGLES = ±

INCHES — THIRD ANGLE PROJECTION

DO NOT SCALE THIS DRAWING !!!

INVIVO RESEARCH INC
12601 RESEARCH PARKWAY., ORLANDO, FL 32826

TITLE ASSEMBLY: AB77
PCA, PCMCIA/VGA DSPLY, 3500

CAD SCALE	SHEET	DWG. NO.	REV.
1.5 : 1	1 of 1	194D669	P

ECN8242

LF21 REV. B

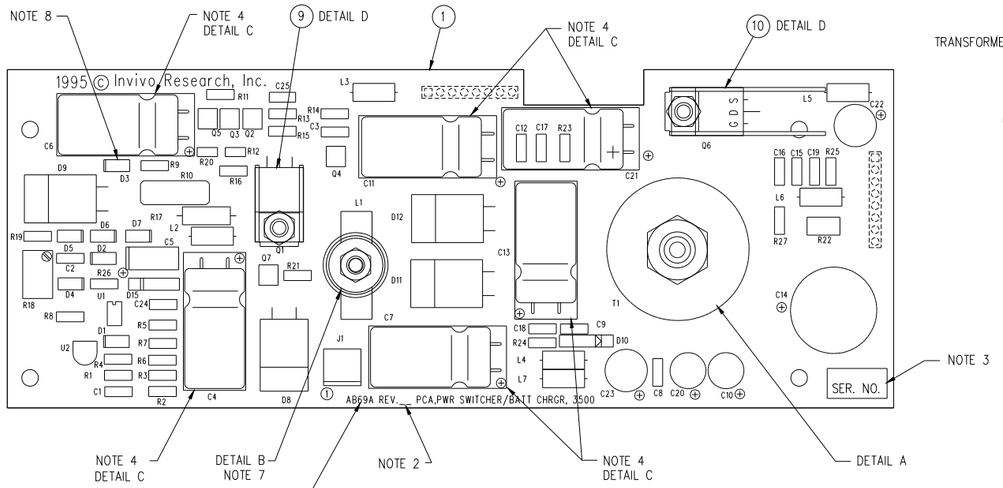

COMPONENT SIDE

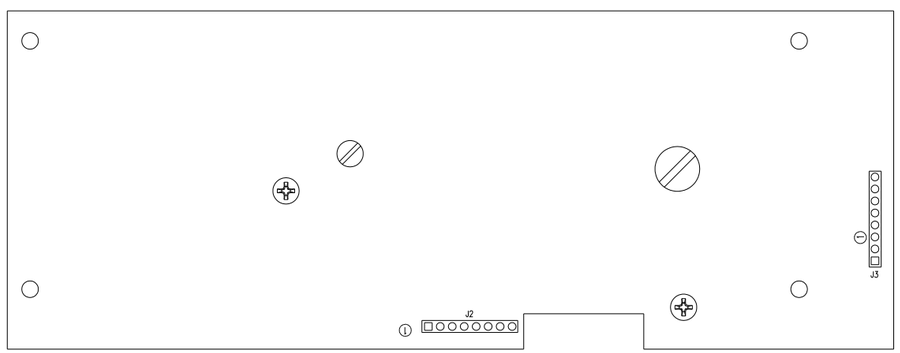

SOLDER SIDE

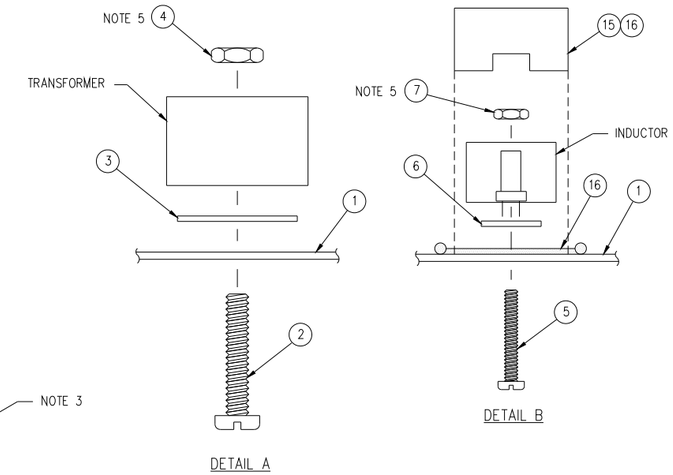

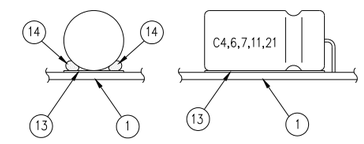

DETAIL C
(5X)

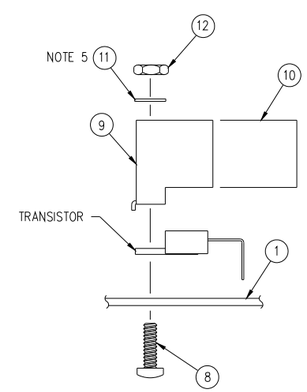

DETAIL D

16	M065	REF	ADHESIVE/SEALANT, AQUARIUM, CLEAR
C25	CX13	1	CAP, .001uF, 10%, 50V, X7R, 1206, CER.
15	HM67	1	SHIELD, POTCORE
R12	RX212	1	RES, 619 OHM, 1%, .125W, 100PPM, 0805
D15	DZ13	1	ZENER, 1N5246B, 16V, 500MW
U2	IR09	1	REGULATOR, POSITIVE, LM317LZ
U1	ILX07	1	OP AMP, LWPWRJFET INPT, 34182, S08
T1	T056	1	TRANSFORMER, POWER
R26	RX77	1	RES, 680 OHM, 5%, .125W, 200PPM, 1206
R23,24,25	RX49	3	RES, 330 OHM, 5%, .125W, 200PPM, 1206
R22	RX188	1	RES, .01 OHM, 1%, .1W, 75 PPM, 2512
R19	RX83	1	RES, 1K, 1%, .125W, 1206 SMD
R18	RP80	1	RES, 2K POT, 10%, .5W, 25T, TOP ADJUST.
R17	R189	1	RES, 1.5 OHM, 5%, 1W, METAL OXIDE
R16	RX02	1	RES, 1K, .125W, 5%, 1206 SMD
R15	RX183	1	RES, 750 OHM, 5%, .125W, 200PPM, 1206
R13,14	RX20	2	RES, 470 OHM, 5%, .125W, 200PPM, 1206
R20	RX191	1	RES, 162 OHM, .1W, 1%, 0805 SMD
R11	RX21	1	RES, 20K, 5% .125W, 200PPM, 1206
R10	R079	1	RES, 5.1 OHM, 5%, 1/4W, 5%, CARBON FILM
R9	RX182	1	RES, 3K, 5%, .125W, 200PPM, 1206 SMD
R8	RX180	1	RES, 75K, 5%, .125W, 200PPM, 1206 SMD
R6	RX46	1	RES, 1.2 MEG, 5% .125W, 200PPM, 1206
R5,7	RX01	2	RES, 1 MEG, 5% .125W
R4	RX57	1	RES, 10K, 1%, .125W, SMD, 1206
R3,21,27	RX40	3	RES, 10K, 5%, 125W, 200PPM, CHIP
R2	RX181	1	RES, 12K, 5%, 125W, 200PPM, 1206
R1	RX54	1	RES, 240 OHMS, 5%, .125W, 200PPM
Q6	Q056	1	TRANS, N-CHNL, PWR. MOSFET, TO-220
Q4,5	QX01	2	TRANS, PNP, SILI, S023, TYPE 2907A
Q2,3,7	QX00	3	TRANS, NPN, SILI, S023, TYPE 2222
Q1	Q026	1	D44H11 NPN SILICON POWER PAK
L2-7	T058	6	BEAD, 370 FERRITE, LEADED, 22 GA
L1	T057	1	INDUCTOR, 47UH, POT CORE
J2,3	PA291B	2	CONN, 8P, SR. RECPT. ST, .100 CTRS
J1	PA253	1	HEADER, FRTN. LCK, SR, 2P (.156)
D10	D008	1	DIODE, SCHOTTKY, 1A, 40V
D8,9,11,12	D030	4	DIODE, SCHOTTKY, 7.5 A, 45V
SEE CHART	DDX01	SEE CHART	DIODE, SIGNAL, LEADLESS, 500MW
C22,23	CA32	2	CAP, 100uF, 20%, 25V, MINI ALUM, RAD.
C19	CX38	1	CAP, .01uF, 20%, 100V, Z5U, 1206, CER.
C17,18	CX11	2	CAP, .01uF, 10%, 50V, X7R, CHIP, CER.
C14	CA29	1	CAP, 2200uF, 20%, 25V, ALUM, RAD.
C10,20	CA34	2	CAP, 220mF, 20%, 10V, ALUM, RAD.
C5	CXT05	1	CAP, 10uF, 20%, 35V, SIZE D, TANT.
C4,6,7,11,13,21	CA35	6	CAP, 1000uF, 20%, 25V, MINI ALUM, RAD.
C3	CX23	1	CAP, 1500pF, 5%, NPO, 50V, 1206 SMD
C1,2,8,9,12, 15,16,24	CX22	8	CAP, .1uF, 10%50V, X7R, 1206 CHIP
14	M008A	REF.	ADHESIVE/SEALANT, RTV, CLEAR, 732
13	M004	6.0	TAPE, ACRYLIC, DS, .010 THK. x .50 WD..
12	N002	2	NUT, HEX, #4-40, ZN
11	NW09	2	LOCKWASHER, IT, SS, #4 X .200 X .020
10	HM59B	1	HEAT SINK, T0220, LARGE
9	HM59A	1	HEAT SINK, T0220, SMALL
8	NS26	2	SCR, #4-40 X 3/8 LG., PHMS-XR, ZN
7	N009	1	NUT, HEX, #4-40, NY
6	NW31	1	WASHER, .125 ID X .500 OD X .062 THK, NY
5	NS21	1	SCR, #4-40 X 3/4 LG., PHMS-NY
4	N030	1	NUT, HEX, #10-32, NY
3	NW30	1	WASHER, .222 ID X 1.00 OD X .040 THK, NY
2	NS92	1	SCR, #10-32 X 1" LG., PHMS-NY
1	B145A	1	PCB, PWR SWTCHR/BAT CHRGR, 3500 REV. B
ITEM / REF. DES.	PART NO.	QTY.	DESCRIPTION

NOTES:

1. WORKMANSHIP TO CONFORM TO IPC CLASS II REQUIREMENTS
2. USING INDELIBLE INK IN CONTRASTING COLOR, PLACE CURRENT ASSEMBLY REV. IN SPACE PROVIDED
3. BOARD REQUIRES SERIALIZED LABELING WITH THE FOLLOWING INFORMATION:
   UNIQUE SERIAL NO., ASSEMBLY P/N & CURRENT REV. LEVEL
   PLACE SERIAL NUMBER LABEL IN THIS AREA - ORIENT AS SHOWN
4. C4, C6, C7, C11, C13, AND C21 TO BE BENT OVER PARALLEL TO PCB AS SHOWN IN DETAIL C.
   IF NECESSARY, PLACE A 1.00 LG. PIECE OF TAPE (ITEM 13) ON THE UNDERSIDE OF EACH CAP TO HOLD IN PLACE. APPLY ADEQUATE AMOUNT OF CLEAR RTV (ITEM 14) ALONG SIDE(S) OF CAPACITORS TO FASTEN SECURELY TO BOARD. DO NOT COVER ANY COMPONENTS OR COMPONENT LEADS w/RTV.
5. ADD ONE DROP OF LOCTITE ASSURE (M050) TO END OF SCREW BEFORE INSTALLING NUT
6. MAXIMUM COMPONENT HEIGHT OF ANY COMPONENT NOT TO EXCEED .915
7. APPLY SUFFICIENT AMOUNT OF ITEM 16 (M065) ADHESIVE TO COMPLETELY ENCIRCLE AND SECURE ITEM 15 (HM67) SHIELD TO POTCORE AT LOCATION L1.
8. OMIT REF. DES. D3 (DDX01) ON AB191A.
9. FOR AB191A; USING INDELIBLE INK IN CONTRASTING COLOR, CROSS OUT "AB69A" ON SILKSCREEN. (AB191A PART NO. TO BE ON LABEL PER NOTE 3.)

APPLICATION CHART

ASSEMBLY	P/N	ITEM/REF. DES.	QTY.	USED ON
AB69A	DDX01	D1-7	7	3500
AB191A	DDX01	D1, D2, D4-7	6	3550 (M12)

REV.	DESCRIPTION	BY	DATE	REV.	DESCRIPTION	BY	DATE
K	PER ECN #8761	SR	5APR02	D	PER ECN #5151M	SLC	03JUL96
				E	PER ECN #5173M	SLC	19JUL96
				F	PER ECN #5312	CHY	26SEP96
				G	PER ECN #5434	SLC	07JAN97
				H	PER ECN #5436	SLC	09JAN97
				J	PER ECN #5589	KCO	17APR97
				C	PER ECN #5062M	CHY	5/23/96
				B	PER ECN #4818	CHY	3/5/96
				A	RELEASED, ECN #4631	SLN	11/14/95
				01	PROTOTYPE REVISION	SR	8/26/95

THIS DOCUMENT IS CONFIDENTIAL AND PROPRIETARY AND IS THE SOLE PROPERTY OF INVIVO RESEARCH INCORPORATED (IRI). IT IS NOT TO BE DISCLOSED TO ANY PARTY, REPRODUCED OR USED IN ANY OTHER MANNER WITHOUT WRITTEN CONSENT OF SAID COMPANY. INVIVO MAINTAINS THE RIGHT TO CHANGE SPECIFICATIONS AT ANY TIME WITHOUT PRIOR NOTICE.

UNLESS OTHERWISE SPECIFIED TOLERANCES ARE
.XX = ±
.XXX = ±
ANGLES = ±

DRAWN	SR	8/18/95
DESIGNED	SN	8/18/95
CHECKED		
APPROVED		

INCHES — THIRD ANGLE PROJECTION

DO NOT SCALE THIS DRAWING !!!

Invivo Research Inc.
PRECISION BIOMEDICAL INSTRUMENTS
12601 RESEARCH PARKWAY., ORLANDO, FL 32826

TITLE
ASSEMBLY: AB69A/AB191A
PCA, PWR SWTCHR/BAT CHRGR, 3500/3550

CAD SCALE	SHEET	DWG. NO.	REV.
2 : 1	1 OF 1	194D680	K

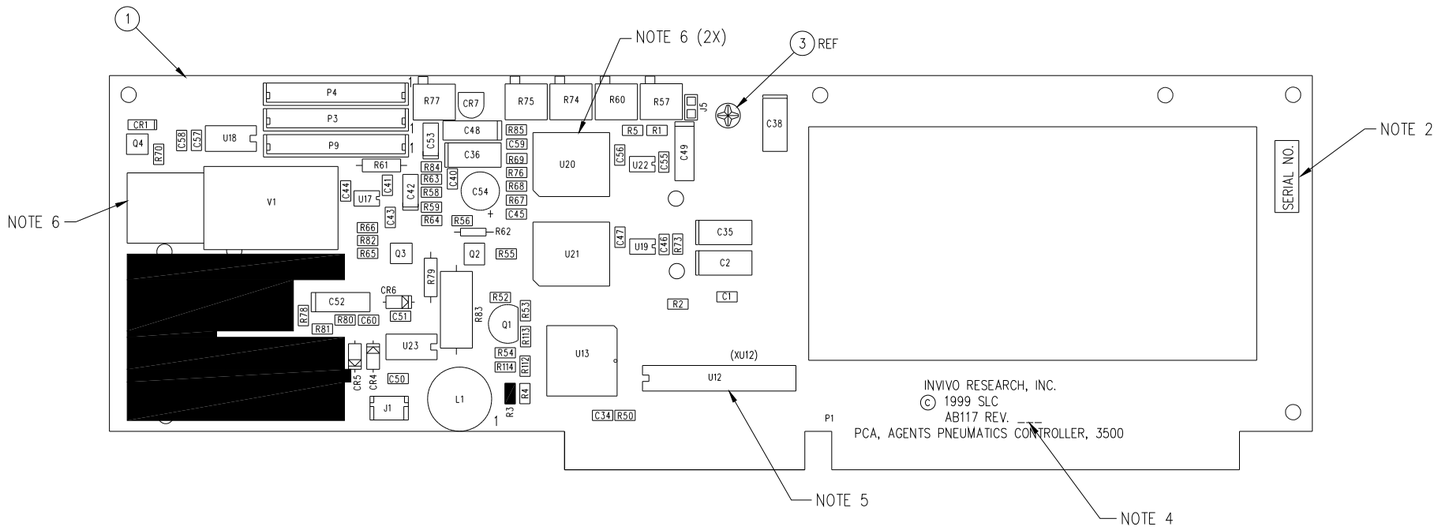

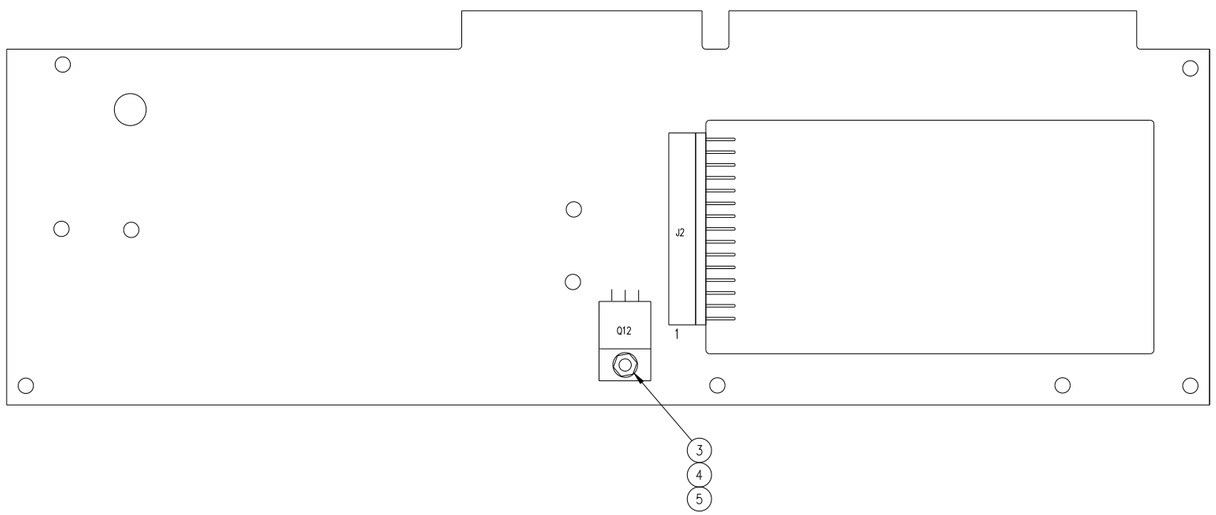

NOTES:

1. WORKMANSHIP TO CONFORM TO IPC CLASS II REQUIREMENTS.
2. BOARD REQUIRES SERIALIZED LABELING WITH THE FOLLOWING INFORMATION:
   UNIQUE SERIAL NO., ASSEMBLY P/N & CURRENT REV. LEVEL.
   PLACE SERIAL NUMBER LABEL IN THIS AREA-ORIENT AS SHOWN.
3. COMPONENTS SHOWN AS SOLID, ARE NOT TO BE INSTALLED.
4. USING INDELIBLE INK IN CONTRASTING COLOR, PLACE CURRENT ASSEMBLY REV. IN SPACE PROVIDED.
5. U12 (AM62) TO BE INSTALLED AT NEXT ASSY (AS159).
6. HAND SOLDER HP88A (V1), HP52 (U20) & HP53 (U21) USING "NO CLEAN" SOLDER. DO NOT IMMERSE OR OTHERWISE CONTAMINATE SENSOR. DO NOT CLEAN IN VAPOR DEGREASER.

NOTE 5	U12	AM62	REF	PROM SET, PNEUM. CONT., AGENT I.D.,3500
	5	NW44N	1	WASHER, LOCK, SPLIT, #4
	4	N007	1	NUT, HEX, #4-40
	3	NS04	1	SCR, #4-40 X 1/4 LG
	L1	T042	1	TORROID, 100uH
	2	PA66	1	SHUNT, 2 POSITION, .10 CENTERS
	R63	RX259	1	RES, 47.5K, 1%, .10W, 25PPM, 0805
	R1	RX257	1	RES, 30.9K, 1%, .10W, 25PPM, 0805
	R2,4,5,53,59, R66,80	RX250	7	RES, 10K, 1%, .10W, 100V, 100PPM, 0805
	R67,85	RX249	2	RES, 499K, 1%, .10W, 100V, 100PPM, 0805
	R82	RX248	1	RES, 5.6K, 1%, .10W, 100V, 100PPM, 0805
	R58	RX247	1	RES, 21.5K, 1%, .10W, 100V, 100PPM, 0805
	R69,76	RX245	2	RES, 15K, 1%, .10W, 100V, 100PPM, 0805
	R68	RX244	1	RES, 47K, 1%, .10W, 100V, 100PPM, 0805
	R56,64,65,73	RX243	4	RES, 1K, 1%, .10W, 100V, 100PPM, 0805
	R81	RX240	1	RES, 221 OHM, 1%, .10W, 100PPM, 0805
	R52	RX238	1	RES, 51.1K, 1%, .10W, 100PPM, 0805
	R112,113,114	RX236	3	RES, 20K, 1%, .10W, 100PPM, 0805
	R54,55,70,78	RX222	4	RES, 2K, 5%, .10W, 250PPM, 0805
	R50	RX220	1	RES, 100 OHM, 5%, .10W, 250PPM, 0805
	R84	RX212	1	RES, 619 OHM,1%,.25W,200V,100PPM,0805
	R57	RPX06	1	POT, 100K, 10%, .25W, 15T, SIDE ADJ., CERMET, SMD
	R60,74,77	RPX05	3	POT, 10K, 10%, .25W, 15T, SIDE ADJ., CERMET, SMD
	R75	RPX04	1	POT, 2K, 10%, .25W, 15T, SIDE ADJ., CERMET, SMD
	R79	RF169	1	RES, .27 OHM, 1W, 1%, WW
	R62	RF54	1	RES, 3.32K, 1%,.125W, METAL FILM
	R61	RF30	1	RES, 42.2K, .125W, 1%, MF
	R83	R076	1	RES, 1.2 OHM, 1W, 5%, METAL OXIDE
	Q2,3	QX01	2	TRANS, CBE PNP, SMALL SIGNAL
	Q4	QX00	1	TRANS, NPN, SILICON, TYPE 2222, SOT-23
	Q12	Q026	1	NPN SILICON POWER PAC TO-229
	Q1	Q003	1	FET, N-CH, PWR STATIC SENSITIVE, VN10KM
	P3,4,9	PA272	3	CONN, 10P, HDR, SR, ST, SHRD, (.098)
	J1	PA194	1	CONN, 2P, HDR, SR, ST, (.098)
	J2	PA114	1	CONN, 30P, HDR, RA, DR, UNSHRD, .100
	J5	PA318A	1	HDR, 2P, UNSHRD, ST, .100 LOW-PROFILE
	CR7	IR50	1	VOLTAGE REF, PROGRAMMABLE, PRECISION
	U23	IR04	1	CONVERTER, DC TO DC MC34063AP1
	U13	INX02A	1	IC,PROGRMBL,PERIPHL INTERFCE, 44 PLCC
	U19	ILX16	1	IC, INSTRUMENTATION AMPLIFIER, AD620BR
	U17,22	ILX10	2	OP AMP, LOW DRIFT, JFET, LF412D
	U18	IL25	1	OP AMP, OPA27GP
	XU12	P030	1	SOCKET, 24 PIN DIP, .300 CENTERS
	V1	HP88A	1	VALVE, PNEUMTC,12VDC, 10 PSI, PC MOUNT
	U21	HP53	1	SENSOR, ABSOLUTE PRESSURE 0 TO 15 PSI
	U20	HP52	1	SENSOR, DIFERENTIAL PRSSURE 0 TO 5 PSI
	CR4	DZ03	1	DIODE, ZENER, 10V, 500mW, 1N758A
	CR1	DDX01	1	DIODE, MELF, 1N4148, 500mW
	CR5,6	D008	2	DIODE, SCHOTTKY, 1 AMP, 40V
	C2,35,36,38	CXT05	4	CAP, 10uF, 20%, 35V, 7343 TANTALUM
	C42,53	CXT04	2	CAP, 1uF, 20%, 35V, 6032 TANTALUM
	C48,49,52	CXT02	3	CAP, 6.8uF, 20%, 35V, 7343 TANTALUM
	C51	CX61	1	CAP,470pF, 10%, 50V, X7R, CERAMIC, 0805
	C41	CX59	1	CAP, .01uF, 10%, 50V, X7R, CERAMIC, 0805
	C34	CX69	1	CAP, 100pF, 10%, 50V, NPO, 0805
	C1,40, C43-47,50, C55-60	CX58	14	CAP,.1uF, 10%, 50V, X7R, CERAMIC 0805
	C54	CT12	1	CAP, .47uF, 10%, 35V, RADIAL TANT.
	1	B186	1	PCB,AGNTS PNUMTCS CNTRLR,3500, REV. D
	ITEM / REF. DES.	PART NO.	QTY.	DESCRIPTION

REV.	DESCRIPTION	BY	DATE
H	PER ECN #7474	CHY	27DEC99
G	PER ECN #7211	CHY	4JUN99
F	PER ECN #7191M	SLC	17MAY99
E	PER ECN #7107	SLC	12MAR99
D	PER ECN #7106	SLC	12MAR99
C	PER ECN #6960	ALH	12DEC98
B	PER ECN #6805M	KCO	27AUG98
A	RELEASED, ECN 6618	SLC	28MAY98

THIS DOCUMENT IS CONFIDENTIAL AND PROPRIETARY AND IS THE SOLE PROPERTY OF INVIVO RESEARCH INCORPORATED (IRI). IT IS NOT TO BE DISCLOSED TO ANY PARTY, REPRODUCED OR USED IN ANY OTHER MANNER WITHOUT WRITTEN CONSENT OF SAID COMPANY. INVIVO RESEARCH INC. MAINTAINS THE RIGHT TO CHANGE SPECIFICATIONS AT ANY TIME WITHOUT PRIOR NOTICE.

UNLESS OTHERWISE SPECIFIED TOLERANCES ARE
.XX = ± .02
.XXX = ± .010
ANGLES = ± 1°

DRAWN	SLC/STEL	28MAY98
DESIGNED	SLC/STEL	28MAY98
CHECKED		
APPROVED		

INCHES — THIRD ANGLE PROJECTION

DO NOT SCALE THIS DRAWING !!!

Invivo Research Inc.
PRECISION BIOMEDICAL INSTRUMENTS
Subsidiary of Invivo Corporation
12601 RESEARCH PARKWAY., ORLANDO, FL 32826

TITLE: ASSEMBLY: AB117 PCA, AGENTS PNEUMTICS CNTRLR, 3500

CAD SCALE:	SHEET:	DWG. NO.:	REV:
2 : 1	1 of 1	194D777	H

ECN5877

LF21 REV. A

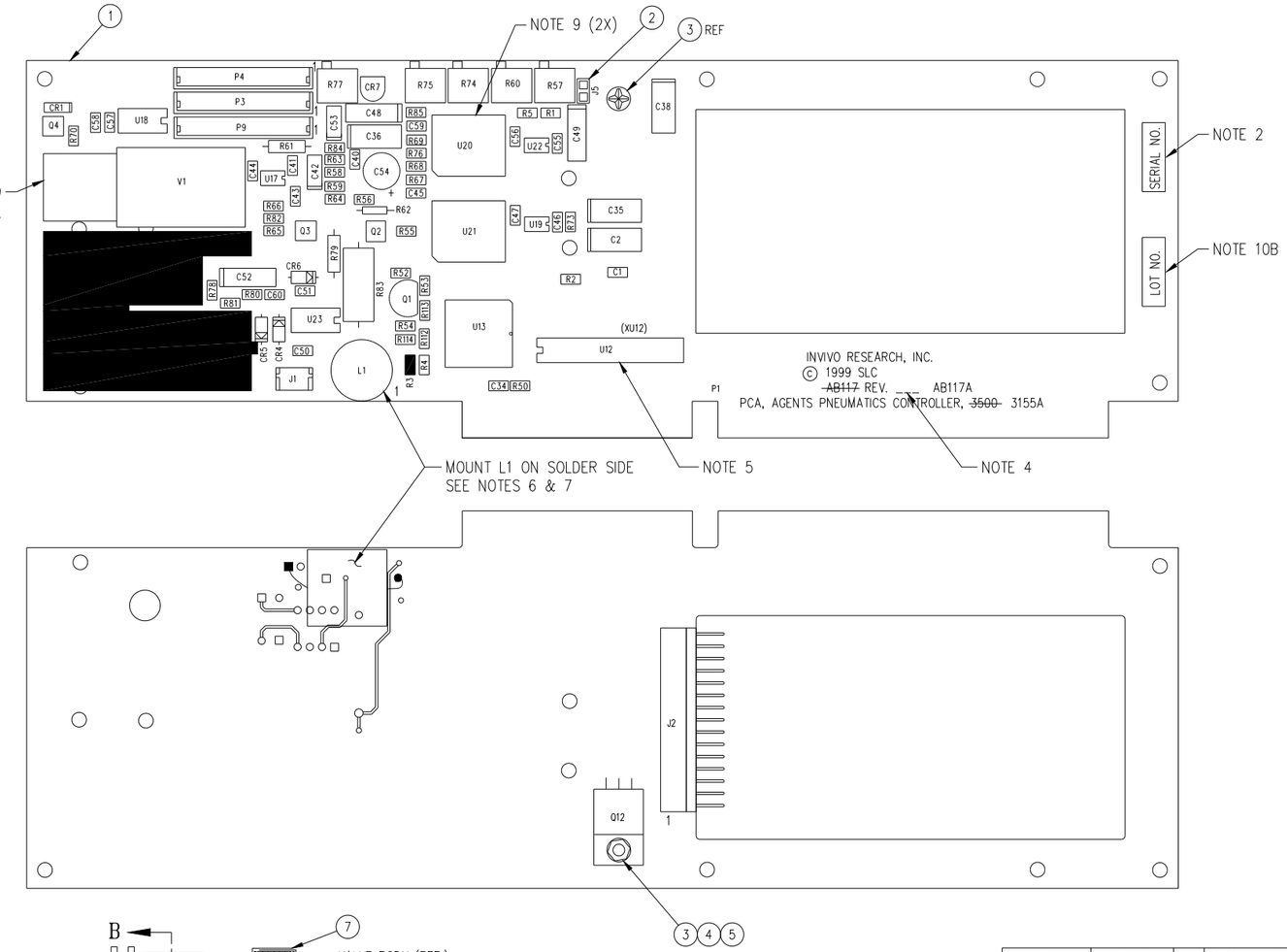

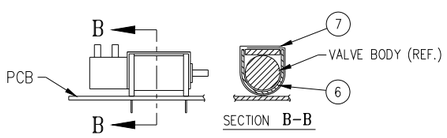

DETAIL A
SCALE: NONE

L1	AS169	1	INDUCTOR, SHIELDED, 3155A
6	HM50CJ	1	SHIELD, VALVE, 3155A
1	AB117	1	PCA, AGENTS, PNEUMATICS CONTRLR, 3500
ITEM / REF. DES.	PART NO.	QTY.	DESCRIPTION

ALTERNATE PARTS LIST

NOTE 5 U12	AM62	REF	PROM SET, PNEUM. CONT., AGENT I.D.,3500
L1	AS169	1	INDUCTOR, SHIELDED, 3155A
R63	RX259	1	RES, 47.5K, 1%, .10W, 25PPM, 0805
R1	RX257	1	RES, 30.9K, 1%, .10W, 25PPM, 0805
R2,4,5,53,59, R66,80	RX250	7	RES, 10K, 1%, .10W, 100V, 100PPM, 0805
R67,85	RX249	2	RES, 499K, 1%, .10W, 100V, 100PPM, 0805
R82	RX248	1	RES, 5.6K, 1%, .10W, 100V, 100PPM, 0805
R58	RX247	1	RES, 21.5K, 1%, .10W, 100V, 100PPM, 0805
R69,76	RX245	2	RES, 15K, 1%, .10W, 100V, 100PPM, 0805
R68	RX244	1	RES, 47K, 1%, .10W, 100V, 100PPM, 0805
R56,64,65,73	RX243	4	RES, 1K, 1%, .10W, 100V, 100PPM, 0805
R81	RX240	1	RES, 221 OHM, 1%, .10W, 100PPM, 0805
R52	RX238	1	RES, 51.1K, 1%, .10W, 100PPM, 0805
R112,113,114	RX236	3	RES, 20K, 1%, .10W, 100PPM, 0805
R54,55,70,78	RX222	4	RES, 2K, 5%, .10W, 250PPM, 0805
R50	RX220	1	RES, 100 OHM, 5%, .10W, 250PPM, 0805
R84	RX212	1	RES, 619 OHM,1%,.25W,200V,100PPM,0805
R57	RPX06	1	POT, 100K, 10%, .25W, 15T, SIDE ADJ., CERMET, SMD
R60,74,77	RPX05	3	POT, 10K, 10%, .25W, 15T, SIDE ADJ., CERMET, SMD
R75	RPX04	1	POT, 2K, 10%, .25W, 15T, SIDE ADJ., CERMET, SMD
R79	RF169	1	RES, .27 OHM, 1W, 1%, WW
R62	RF54	1	RES, 3.32K, 1%,.125W, METAL FILM
R61	RF30	1	RES, 42.2K, .125W, 1%, MF
R83	R076	1	RES, 1.2 OHM, 1W, 5%, METAL OXIDE
Q2,3	QX01	2	TRANS, CBE PNP, SMALL SIGNAL
Q4	QX00	1	TRANS, NPN, SILICON, TYPE 2222, SOT-23
Q12	Q026	1	NPN SILICON POWER PAC TO-229
Q1	Q003	1	FET, N-CH, PWR STATIC SENSITIVE, VN10KM
P3,4,9	PA272	3	CONN, 10P, HDR, SR, ST, SHRD, (.098)
J1	PA194	1	CONN, 2P, HDR, SR, ST, (.098)
J2	PA114	1	CONN, 30P, HDR, RA, DR, UNSHRD, .100
J5	PA318A	1	HDR, 2P, UNSHRD, ST, .100 LOW-PROFILE
CR7	IR50	1	VOLTAGE REF, PROGRAMMABLE, PRECISION
U23	IR04	1	CONVERTER, DC TO DC MC34063AP1
U13	INX02A	1	IC,PROGRMBL,PERIPHL INTERFCE, 44 PLCC
U19	ILX16	1	IC, INSTRUMENTATION AMPLIFIER, AD620BR
U17,22	ILX10	2	OP AMP, LOW DRIFT, JFET, LF412D
U18	IL25	1	OP AMP, OPA27GP
XU12	P030	1	SOCKET, 24 PIN DIP, .300 CENTERS
V1	HP88A	1	VALVE, PNEUMTC,12VDC, 10 PSI, PC MOUNT
U21	HP53	1	SENSOR, ABSOLUTE PRESSURE 0 TO 15 PSI
U20	HP52	1	SENSOR, DIFERENTIAL PRSSURE 0 TO 5 PSI
CR4	DZ03	1	DIODE, ZENER, 10V, 500mW, 1N758A
CR1	DDX01	1	DIODE, MELF, 1N4148, 500mW
CR5,6	D008	2	DIODE, SCHOTTKY, 1 AMP, 40V
C2,35,36,38	CXT05	4	CAP, 10uF, 20%, 35V, 7343 TANTALUM
C42,53	CXT04	2	CAP, 1uF, 20%, 35V, 6032 TANTALUM
C48,49,52	CXT02	3	CAP, 6.8uF, 20%, 35V, 7343 TANTALUM
C51	CX61	1	CAP,470pF, 10%, 50V, X7R, CERAMIC, 0805
C41	CX59	1	CAP, .01uF, 10%, 50V, X7R, CERAMIC, 0805
C34	CX69	1	CAP,100pF, 10%, 50V, NPO, 0805
C1,40, C43-47,50, C55-60	CX58	14	CAP,.1uF, 10%, 50V, X7R, CERAMIC 0805
C54	CT12	1	CAP, .47uF, 10%, 35V, RADIAL TANT.
7	M088A	REF	TAPE, KAPTON, .004 THK., 1/2 INCH WD.
6	HM50CJ	1	SHIELD, VALVE, 3155A
5	NW44N	1	WASHER, LOCK, SPLIT, #4
4	N007	1	NUT, HEX, #4-40
3	NS04	1	SCR, #4-40 X 1/4 LG
2	PA66	1	SHUNT, 2 POSITION, .10 CENTERS
1	B186	1	PCB,AGNTS PNUMTCS CNTRLR,3500, REV. D
ITEM / REF. DES.	PART NO.	QTY.	DESCRIPTION

NOTES:

1. WORKMANSHIP TO CONFORM TO IPC CLASS II REQUIREMENTS.
2. BOARD REQUIRES SERIALIZED LABELING WITH THE FOLLOWING INFORMATION:
   UNIQUE SERIAL NO., ASSEMBLY P/N & CURRENT REV. LEVEL.
   PLACE SERIAL NUMBER LABEL IN THIS AREA–ORIENT AS SHOWN.
3. COMPONENTS SHOWN AS SOLID, ARE NOT TO BE INSTALLED.
4. USING INDELIBLE INK IN CONTRASTING COLOR, PLACE CURRENT ASSEMBLY REV. IN SPACE PROVIDED. SIGNIFY BOARD ASSY BY STRIKING OUT "AB117" AND "3500", THEN WRITE IN "AB117A" AND "3155A" AS INDICATED.
5. U12 (AM62) TO BE INSTALLED AT NEXT ASSY (AS159A).
6. SOLDER LEADS OF P/N AS169 INDUCTOR ASSY (L1) TO PADS AS SHOWN.
7. MOUNT L1 INDUCTOR ASSY SECURELY TO PCB USING P/N M008A CLEAR RTV SEALANT. ENSURE L1 INDUCTOR ASSY IS POSITIONED AS SHOWN, NOT PROTRUDING PAST EDGE OF BOARD.
8. SECURE P/N HM50CJ SHIELD (ITEM 6) TO P/N HP88A (V1) VALVE BODY USING P/N M088A KAPTON TAPE (ITEM 7), ENSURING COMPLETE COVERAGE OF SHIELD AS SHOWN IN DETAIL A.
9. HAND SOLDER HP88A (V1), HP52 (U20) & HP53 (U21) USING "NO CLEAN" SOLDER. DO NOT IMMERSE OR OTHERWISE CONTAMINATE SENSOR. DO NOT CLEAN IN VAPOR DEGREASER.
10. IF CONVERTING FROM AB117: SEE ALTERNATE PARTS LIST
    A. REMOVE P/N HP88A VALVE, (REF, DES. V1), REMOUNT PER NOTES 8 AND 9.
    B. PLACE LOT NO. LABEL IN THIS AREA – ORIENT AS SHOWN. LABEL HAS THE FOLLOWING INFORMATION:
    ASSEMBLY P/N (AB117A), REV. LEVEL AND LOT NUMBER. DO NOT REMOVE AB117 SERIAL LABEL.

REV.	DESCRIPTION	BY	DATE
B	PER ECN #8624	CHY	11FEB02
A	RELEASED, ECN #7512	KCO	6JAN00

THIS DOCUMENT IS CONFIDENTIAL AND PROPRIETARY AND IS THE SOLE PROPERTY OF INVIVO RESEARCH INCORPORATED (IR). IT IS NOT TO BE DISCLOSED TO ANY PARTY, REPRODUCED OR USED IN ANY OTHER MANNER WITHOUT WRITTEN CONSENT OF SAID COMPANY. INVIVO RESEARCH INC. MAINTAINS THE RIGHT TO CHANGE SPECIFICATIONS AT ANY TIME WITHOUT PRIOR NOTICE.

UNLESS OTHERWISE SPECIFIED TOLERANCES ARE
.XX = ± .02
.XXX = ± .010
ANGLES = ± 1°

DRAWN	KCO	6JAN00
DESIGNED	RLM	21DEC99
CHECKED		
APPROVED		

INCHES — THIRD ANGLE PROJECTION

DO NOT SCALE THIS DRAWING !!!

INVIVO RESEARCH, INC.
12601 RESEARCH PARKWAY., ORLANDO, FL 32826

TITLE: ASSEMBLY: AB117A PCA, AGENTS PNEUMTICS CNTRLR, 3155A

CAD SCALE:	SHEET:	DWG. NO.:	REV.:
2 : 1	1 of 1	194D863	B

ECN8242

LF21 REV. B

3155MVS-1-1 LANGUAGE OPTION 1, ENGLISH			
ITEM / REF. DES.	PART NO.	QTY.	DESCRIPTION
18	L2060	2	LABEL, CAUTION, 3155MVS
97	L2054	1	LABEL, BATTERY REMOVAL
106	9545	1	MANUAL, OPERATORS, 3155MVS/3155A
134	L2103	1	OVERLAY, GRAPHICS, 3500
136	L2064	1	LABEL, BASEPLATE, 3155MVS, ENG

3155MVS-1-2 LANGUAGE OPTION 2, GERMAN			
ITEM / REF. DES.	PART NO.	QTY.	DESCRIPTION
18	L2060G	2	LABEL, CAUTION, 3155MVS, GERMAN
97	L2054G	1	LABEL, BATTERY REMOVAL, GERMAN
106	9545G	1	MANUAL, OPERATORS, 3155MVS, GER.
134	L2103G	1	OVERLAY, GRAPHICS, 3500, GERMAN
135	L2044G	1	LAB, WARNING, BASEPLATE, 3500, GERMAN
136	L2064G	1	LABEL, BASEPLATE, 3155MVS, GER

3155MVS-1-3 LANGUAGE OPTION 3, FRENCH			
ITEM / REF. DES.	PART NO.	QTY.	DESCRIPTION
18	L2060F	2	LABEL, CAUTION, 3155MVS, FRENCH
97	L2054F	1	LABEL, BATTERY REMOVAL, FRENCH
106	9545F	1	MANUAL, OPERATORS, 3155MVS, FRN.
134	L2103F	1	OVERLAY, GRAPHICS, 3500, FRENCH
136	L2064F	1	LAB, BASEPLATE, 33155MVS, FRN.

3155MVS-1-4 LANGUAGE OPTION 4, SPANISH			
ITEM / REF. DES.	PART NO.	QTY.	DESCRIPTION
18	L2060S	2	LABEL, CAUTION, 3155MVS, SPANISH
97	L2054S	1	LABEL, BATTERY REMOVAL, SPANISH
106	9545S	1	MANUAL, OPERATORS, 3155MVS, SPN.
134	L2103S	1	OVERLAY, GRAPHICS, 3500, SPN.
135	L2044S	1	LAB, WARNING, BASEPLATE, 3500, SPN.
136	L2064S	1	LAB, BASEPLATE, 315MVS, SPN.

3155MVS-1-5 LANGUAGE OPTION 5, ITALIAN			
ITEM / REF. DES.	PART NO.	QTY.	DESCRIPTION
18	L2060I	2	LABEL, CAUTION, 3155MVS, ITALIAN
97	L2054I	1	LABEL, BATTERY REMOVAL, ITALIAN
106	9545I	1	MANUAL, OPERATORS, 3155MVS, ITALIAN
134	L2103I	1	OVERLAY, GRAPHICS, 3500, ITL.
135	L2044I	1	LAB, WARNING, BASEPLATE, 3500, ITL.
136	L2064I	1	LAB, BASEPLATE, 315MVS, ITL.

3155MVS-1-6 LANGUAGE OPTION 6, PORTUGUESE			
ITEM / REF. DES.	PART NO.	QTY.	DESCRIPTION
18	L2060P	2	LABEL, CAUTION, 3155MVS, PORTUGUESE
97	L2054P	1	LABEL, BATTERY REMOVAL, PORTUGUESE
106	9545P	1	MANUAL, OPERATORS, 3155MVS, PRT.
134	L2103P	1	OVERLAY, GRAPHICS, 3500, PRT.
135	L2044P	1	LAB, WARNING, BASEPLATE, 3500, PRT.
136	L2064P	1	LAB, BASEPLATE, 315MVS, PRT.

3155MVS-2-1 VOLTAGE OPTION 1, 110V			
ITEM / REF. DES.	PART NO.	QTY.	DESCRIPTION
118	AS153	1	POWER ADAPTER, 3150
121	AC348A	1	CAB., POWER ADAPTER, 3150, 5 FT.
125	HH08	2	HOOK, PLASTIC, WHITE, RECT., SUPER
137	AS18	1	ASSY., LINE CORD, 110V, TESTED
138	FU13	2	FUSE, 3/4 AMP, SLO-BLO, 313.750

3155MVS-2-2 VOLTAGE OPTION 2, 220V EURO./GERMAN			
ITEM / REF. DES.	PART NO.	QTY.	DESCRIPTION
118	AS153	1	POWER ADAPTER, 3150
121	AC348A	1	CAB., POWER ADAPTER, 3150, 5 FT.
125	HH08	2	HOOK, PLASTIC, WHITE, RECT., SUPER
137	AS18G	1	ASSY., LINE CORD, 10A/220-230V, EURO.
138	FU25	2	FUSE, 4/10 AMP, 250V, SLO-BLO, 3AG

3155MVS-2-3 VOLTAGE OPTION 3, 220V UNIVERSAL			
ITEM / REF. DES.	PART NO.	QTY.	DESCRIPTION
118	AS153	1	POWER ADAPTER, 3150
121	AC348A	1	CAB., POWER ADAPTER, 3150, 5 FT.
125	HH08	2	HOOK, PLASTIC, WHITE, RECT., SUPER
137	AS18A	1	ASSY., LINE CORD, 220V, TESTED
138	FU25	2	FUSE, 4/10 AMP, 250V, SLO-BLO, 3AG

3155MVS-2-4 VOLTAGE OPTION 4, 100V			
ITEM / REF. DES.	PART NO.	QTY.	DESCRIPTION
118	AS153J	1	POWER ADAPTER, 3150
121	AC348A	1	CAB., POWER ADAPTER, 3150, 5 FT.
125	HH08	2	HOOK, PLASTIC, WHITE, RECT., SUPER
137	AS18A	1	ASSY., LINE CORD, 220V, TESTED
138	FU13	2	FUSE, 3/4 AMP, SLO-BLO, 313.750

3155MVS-3-1 RECORDER OPTION 1, DUAL CHANNEL RECORDER			
ITEM / REF. DES.	PART NO.	QTY.	DESCRIPTION
131	HT16	1	RECORDER, THERMAL, GEN. SCANG. AR42
132	MP05	1	PAPER, THERM. ARRAY, BLACK, 50mm
133	L2036	1	LABEL, PRINTER DOOR (GEN. SCANG.)

3155MVS-4-1 COMM. OPTION 1, HARDWIRE			
ITEM / REF. DES.	PART NO.	QTY.	DESCRIPTION
11	AC329A	-1	CABLE, DATA, TRANSCEIVER, TELEMETRY, 16"
12	AC330A	-1	CABLE, POWER, TRANSCEIVER, TELEMETRY, 16"
20	AC355	-1	CABLE, LOW VOLTAGE DC POWER, 3155
22	AC331	-1	CABLE ANTENNA, TELEMETRY, 8 INCH
25	AM46	REF	PCMCIA CARD, FLASH MEM. OP. SYS., 3500
25	AM69	-REF	PCMCIA CARD, FLASH MEM. OP. SYS., 3155A/MVS
83	NW33	-1	WASHER, NYLON, .120 X .250 X .010
88	H058A	1	PLUG, HOLE, .25 DIA, WHITE, NYLON
89	N002	-1	NUT, HEX, #4-40, ZN
111	AB182B	-1	ASSY, 2410 RADIO PCA
112	HE61	-1	ANTENNA, 2.4 GHZ, RIGHT ANGLE
126	HI66	-1	INSULATOR, 2410 RADIO PCA
144	AC355A	1	CABLE, LOW VOLTAGE DC POWER, 3150

3155MVS-4-2 COMM. OPTION 2, TELEMETRY, SIEMENS			
ITEM / REF. DES.	PART NO.	QTY.	DESCRIPTION
25	AM46	REF	PCMCIA CARD, FLASH MEM. OP. SYS., 3500
25	AM69	-REF	PCMCIA CARD, FLASH MEM. OP. SYS., 3155A/MVS
83	NW33	-1	WASHER, NYLON, .120 X .250 X .010
111	AB182B	-1	ASSY, 2410 RADIO PCA
126	HI66	-1	INSULATOR, 2410 RADIO PCA
146	HE60	1	TRANSCEIVER, 2.4 GHz, 115200 BPS
147	N002	1	NUT, HEX, #4-40, ZN

ITEM / REF. DES.	PART NO.	QTY.	DESCRIPTION
150			
149			
148	NW05	6	WASHER, FLAT #6 x .312 x .032
147	SEE CHART	—	NUT, HEX, #4-40, ZN
146	SEE CHART	—	TRANSCEIVER, 2.4 GHz, 115200 BPS
145	H139	1	CAP, PROTECTIVE, KEYBOARD CONNECTOR
144	SEE CHART	—	CABLE, LOW VOLTAGE DC POWER, 3150
143	FE05	4	FOOT, CLR, POLYURTHN. .312D x .085
142	M007	A/R	ADHESIVE, LOCTITE 362, RED, THREADLOCK
141	L185	1	LABEL, DATE OF MANUFACTURE
140	NW08	4	LOCKWASHER, INT. TOOTH, #8, SS
139	NW12	10	WASHER, #4 X .125 X .312 X .030
138	SEE CHART	—	FUSE
137	SEE CHART	—	ASSY., LINE CORD
136	SEE CHART	—	LAB, BASEPLATE, 3155MVS
135	SEE CHART	—	LAB, WARNING, BASEPLATE, 3500
134	SEE CHART	—	OVERLAY/MEMBRANE KEYPAD, 3500
133	SEE CHART	—	LABEL, PRINTER DOOR
132	SEE CHART	—	PAPER, THERM. ARRAY, BLACK, 50mm
131	SEE CHART	—	RECORDER, THERMAL
130	M092	3.25	TAPE, SHIELDING, COPPER 1" WIDE
129	NS35	4	SCR., #4-40 x 3/4 LG., PHMS-XR, ZN
128	H079	1	LATCH BLOCK, "D" CONN, .090 PNL.
127	H112	56.75	GASKET, EMI, CHO-FOAM, .276W X .079H
126	HE66	1	INSULATOR, 2410 RADIO PCA
125	SEE CHART	—	HOOK, PLASTIC, RECT., WHITE, SUPER
124	HM50BR	1	COVER, CONNECTOR, BASEPLATE, 3155MVS
123	HM50BD	1	COVER, CONNECTOR, FR. PNL, 3155MVS
122	M088A	18.38	TAPE, KAPTON, .004 THK., 1/2" WD, ROLL
121	SEE CHART	—	CAB., POWER ADAPTER, 3150, 5 FT.
120	FE02	2	FEET, GRAY
119	H125	1	SCREEN, EMI/RF, 80 OPI, 8.87x6.73
118	SEE CHART	—	POWER ADAPTER, 3150
117	N003	1	NUT, HEX, #8-32, ZN
116	NW02	8	WASHER, NYLON, #6 X .312 X .032
115	S015	1	SWITCH, ROCKER, 1803-1121
114	AC266	1	CAB. KEYBOARD, OMNI-TRAK, 3500
113	HE70	1	DISPLAY, LCD, COLOR, 10.4" DIAG. ACTIVE, 3V
112	HE61	1	ANTENNA, 2.4 GHz, RIGHT ANGLE
111	AB182B	1	ASSY, 2410 RADIO PCA
110	M149	1	INSERT, BATTERIES
109	M148	1	BOX, ACC., 15.75 X 12.5 X 2.75
108	M145A	1	FILLER, INSERT, FOAM, 3500
107	M145	1	BOX, SHIPPING, 3500
106	SEE CHART	—	MANUAL, OPERATOR'S, 3155MVS/3155A
105	H120	44.50	GASKET, EMI, .157W X .039H, PSA
104	M008A	REF	ADHESIVE/SEALANT, RTV, CLEAR, 732
103	M020	REF	ADHESIVE, LOCTITE, TOUGHENED, 411
102	L2102	1	SWITCHPAD, MEMEBRANE, KEYPAD, 3500
101	NS81N	1	SCR, #4-40 X 5/16 LG, FIHMS-XR, NM
100	PA366	1	GASKET, EMI/RFI, 15 PIN CONN.
99	M004	9.00	TAPE, ACRYLIC, DS, .010 THK X .50 WD.
98	HM50AJ	1	INSULATOR, MOTHERBOARD PCA, 3500
97	SEE CHART	—	LABEL, BATTERY REMOVAL
96	HF05	1	FINGER GUARD, 40mm FAN
95	HM50AE	1	COVER, RECORDER, 3500
94	FE06	1	BUMPER, PROTECTIVE, BLK, .50W X .23H
93	HI40	1	INSULATOR, 2.70 X 3.25 - 3500
92	WT05	1.00	HEAT SHRINK 3/16" I.D. BLACK
91	S035	1	ENCODER, OPTICAL, 24 POS., PB, MINI
90	N006	2	NUT, HEX, #2-56, ZN
89	N002	19	NUT, HEX, #4-40, ZN
88	SEE CHART	—	PLUG, HOLE, .25 DIA, WHITE, NYLON
87	L2086	1	LABEL, FRONT PANEL, 3155MVS
86	NW09	11	LOKWSHR, IT,SS, #4 X .200 X .020
85	NW32	6	FLTW, #8, REG. SERIES - ZN
84	N001	2	NUT, HEX, #6-32, ZN
83	NW33	2	WASHER, NYLON, .120 X .250 X .010
82	NW01	6	LOKWSHR, IT,SS, #6 X .285 X .040
81	NS06	2	SCR, #6-32 X 1/2 LG. PHMS-XR, ZN
80	NS95	1	SCR, SET, #4-40 X 3/16, CP. PT., SS
79	NS93	4	SCR, CAPTIVE, #8-32 X 1/2, SHCS
78	NS98	7	SCR, #4-40 X 1/4 LG. FHMS-XR, ZN
77	NS50	5	SCR, #4-40 X 1/4 LG. PHMS-NY
76	NS05	4	SCR, #8-32 X 5/16 LG. PHMS-XR, ZN
75	L137A	1	LABEL, C.E. COMPLIANCE, MDD (SEMKO)
74	NS10	2	SCR, #6-32 X 3/8 LG. PHMS-XR, ZN
73	NS04	42	SCR, #4-40 X 1/4 LG. PHMS-XR, ZN
72	NS02	26	SCR, #6-32 X 1/4 LG. PHMS-XR, ZN
71	L1016C	1	LABEL, MODEL/SERIAL, GENERIC
70	L014	2	LABEL "ACCEPTED" W02
69			
68	H086	2	RING, RETAINING, 3500
67	H122	30.50	GASKET, SHIELDING, EMI, .118 X .118
66	H088	1	LATCH, SPRING, SLOTTED HEAD
65	H006	2	SPEAKER CLIP 48SC004
64	NS26	6	SCR, #4-40 X 3/8 LG. PHMS-XR, ZN
63	HS77	4	STANDOFF, HEX, M/F, 4-40 X .875
62	HS49	2	STANDOFF, HEX, M/F, 4-40 X .500
61	HS55	2	STANDOFF, HEX, M/F, 4-40 X .500 NY
60	HS47	4	STANDOFF, HEX, M/F, 4-40 X .250
59	HS48	2	STANDOFF, HEX, M/F, 4-40 X .375
58	H058A	1	PLUG, HOLE, .25 DIA, WHITE, NYLON
57	HM50W	1	DOOR, BATTERY, OMNI-TRAK 3500
56	HM50T	1	COVER, 3500
55	HM50R	1	END CAP, PAINTED, 3500
54	HM50AD	1	SPRING, DOOR, 3500
53	HM50X	1	PIN, HINGE, 3500
52	HM50J3A	1	RET. BRKT, P.C. BD, R.S. BTTM, 3155MVS
51	HM50J2A	1	RET. BRKT, P.C. BD, L.S. BTTM, 3155MVS
50	HM50J	1	BRKT., SUPPORT, LEFT SIDE, 3500
49	HM50BL	1	BRKT., SUPPORT, RT. SIDE, 3500
48	HM50EA	1	CAGE, BATTERY, 3500 SERIES
47	HM50D	1	SELECTOR KNOB (FINGER TURN), 3500
46	HM50BK	1	BASEPLATE, 3500 (FI02)
45	HM50B1	1	COND. PAINT, DISPLAY INSERT MOLDING, 3500
44	HM50AP	1	COVER, PCMCIA, OMEGA 3500
43	HM50AN	1	BRKT., STIFFENER, SUPPORT, 3500
42	HM50AM	1	COVER PLATE, CONNECTOR, 3500
41	HM50AH	3	CLAMP, BEZEL BTTM, OMNI-TRAK 3500
40	HM50AG	6	CLAMP, BEZEL SIDE, OMNI-TRAK 3500
39	HM50BJ	1	SHIELD, INNER, 3155
38	H137	3	SPRING, COMPRESSION, .24 O.D. X .44 LG., SS
37	HM50A2	1	COND. PAINT, FRONT PANEL MOLDING, 3500
36	HH09B	1	VINYL HANDLE & INSERT, FROM HH09
35	HE16	1	BINDING POST, METAL
34	HB10	3	BATTERY, 12V, RECHARGABLE
33	FU31	1	FUSE, 5 AMP, 5 X 20mm, SLO-BLO
32	FU30	1	FUSEHOLDER, 5 X 20mm, PANEL MOUNT
31	FE08	2	FEET, TIP-UP, PLASTIC
30	FE07	2	FOOT, CASE, .82 DIA. X .59 H
29	AS141	1	FAN, MILLENNIA 3500
28	AS137	1	ASSY, SPEAKER, OMNI-TRAK 3500
27	AM45	1	PROM SET, MULTIFUNCTION I/O, 3500
26	AM40	1	PROM SET, KEYBOARD INTERFACE, 3500
25	AM69	REF	PCMCIA CARD, FLASH MEM. OP. SYS., 3155A/MVS
24	AM44C	1	PROM SET, VIDEO BIOS, ACTIVE, LG SEMICON, 3500
23	AC252	1	CAB, SHARP ACTIVE LCD DISPLAY, 3500
22	AC331	1	CABLE, ANTENNA, TELEMETRY, 8"
21	AC269	1	CAB, MOTHER BD. PWR, OMNI 3500
20	AC355	1	CAB, LOW VOLTAGE DC POWER, 3155
19	AC261	1	CABLE, XENTEK, INVRTR/VGA, 3500
18	SEE CHART	—	LABEL, CAUTION, 3155MVS
17	AC257	1	CABLE, RIBBON, 24P, .025 CTRS, 8"
16	H134	1	SCREEN, EMI/RFI, 40mm FAN
15	HM50CF	1	COVER PLATE, FAN, 3500
14	AC113	1	CAB, PWR SUPPLY/AD BD., 3500
13	AC270	1	CAB, FRONT SWITCH PWR, 3500
12	AC330A	1	CABLE, POWER, TRANSCEIVER, TELEMETRY, 16"
11	AC329A	1	CABLE, DATA, TRANSCEIVER, TELEMETRY, 16"
10	AB97	1	PCA, SHARP 321 CBL. ADPTR., (SHARP ONLY)
9	AB70	1	PCA, MULTI-FUNCTION I/O, 3500
8	AB09A	1	PCA, INVERTER, LCD, LS380, XENTEK
7	AB68	1	PCA, KEYBD. INTRFCE, OMNI-TRAK, 3500
6	AB88	1	PCA, PC/AT MOTHERBD, w/MPRCSR
5	AB77	1	PCA, PCMCIA/VGA DISPLAY, 3500
4	AB72A	1	PCA, POWER INTRCNCT, OMEGA 3500
3	AB69A	1	PCA, PWR SWITCHER/BATT CHARGR, 3500
2	AB69	1	PCA, POWER SUPPLY, 3500
1	AB65A	1	ASSY, A/D PCA, 3500

REF. ASSEMBLY INSTRUCTION AI058

REV.	DESCRIPTION	BY	DATE
Y	PER ECN #8796	CHY	1MAY02
W	PER ECN #8496	CHY	13DEC01
V	PER ECN #8394	SR	31AUG01
U	PER ECN #8382	KCO	9JUL01
T	PER ECN #8114	SR	18MAY01
R	PER ECN #8166	CHY	25JAN01
P	PER ECN #8082	CHY	8DEC00
N	PER ECN #8017	CHY	12OCT00
M	PER ECN #7615	CHY	15AUG00
L	PER ECN #7663	CHY	22MAY00
K	PER ECN #7508	JWT	6JAN00
J	PER ECN #7447	CHY	18NOV99
H	PER ECN #7344	JWT	4OCT99
G	PER ECN #7252	CHY	19JUL99
F	PER ECN #6811	CHY	9NOV98
E	PER ECN #6769	SR	11SEP98
D	PER ECN #6704	CHY	6AUG98
C	PER ECN #6462	KCO	20MAY98
B	PER ECN #6519	SR	APR98
A	RELEASED, ECN #6210	SR	DEC97

THIS DOCUMENT IS CONFIDENTIAL AND PROPRIETARY AND IS THE SOLE PROPERTY OF INVIVO RESEARCH INCORPORATED (IRI). IT IS NOT TO BE DISCLOSED TO ANY PARTY, REPRODUCED OR USED IN ANY OTHER MANNER WITHOUT WRITTEN CONSENT OF SAID COMPANY. INVIVO MAINTAINS THE RIGHT TO CHANGE SPECIFICATIONS AT ANY TIME WITHOUT PRIOR NOTICE.

UNLESS OTHERWISE SPECIFIED TOLERANCES ARE
.XX = ±
.XXX = ±
ANGLES = ±

DRAWN	CHY	10DEC97
DESIGNED	RM	10DEC97
CHECKED		
APPROVED		

INCHES — THIRD ANGLE PROJECTION

DO NOT SCALE THIS DRAWING !!!

INVIVO RESEARCH, INC.
12601 RESEARCH PARKWAY., ORLANDO, FL 32826

TITLE
ASSY: 3155MVS
MILLENNIA REMOTE DISPLAY CONTROLLER

CAD SCALE	SHEET	DWG. NO.	REV.
.75 : 1	1 of 10	197C540	Y

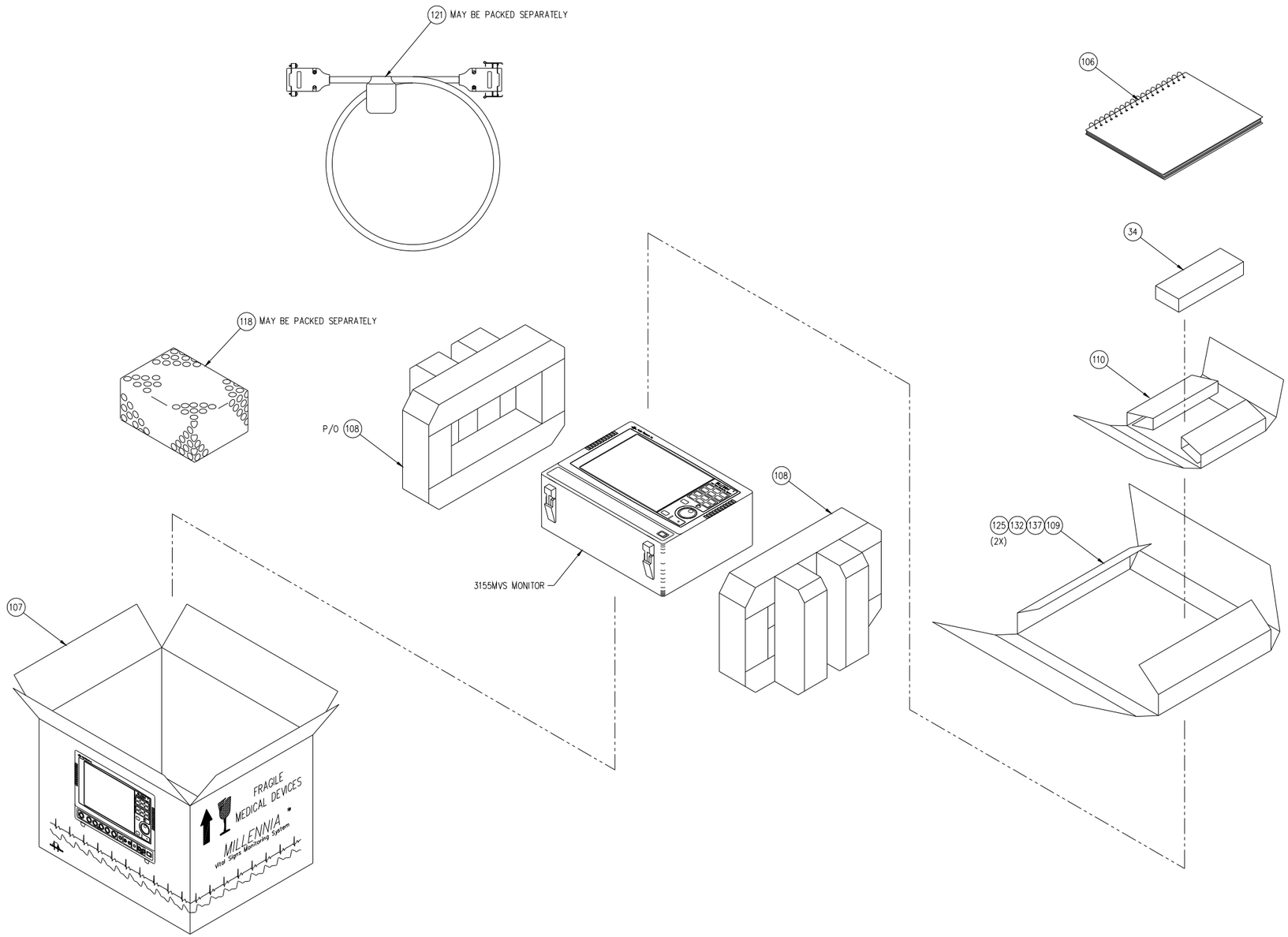

SCALE: .25 : 1

UNLESS OTHERWISE SPECIFIED TOLERANCES ARE			
.XX = ±	DRAWN	CHY	10DEC97
.XXX = ±	DESIGNED	RM	10DEC97
ANGLES = ±	CHECKED		
	APPROVED		

INCHES — THIRD ANGLE PROJECTION

DO NOT SCALE THIS DRAWING !!!

THIS DOCUMENT IS CONFIDENTIAL AND PROPRIETARY AND IS THE SOLE PROPERTY OF INVIVO RESEARCH INCORPORATED (IRI). IT IS NOT TO BE DISCLOSED TO ANY PARTY, REPRODUCED OR USED IN ANY OTHER MANNER WITHOUT WRITTEN CONSENT OF SAID COMPANY. INVIVO MAINTAINS THE RIGHT TO CHANGE SPECIFICATIONS AT ANY TIME WITHOUT PRIOR NOTICE.

INVIVO RESEARCH, INC.
12601 RESEARCH PARKWAY., ORLANDO, FL 32826

TITLE
ASSY: 3155MVS
MILLENNIA REMOTE DISPLAY CONTROLLER

CAD SCALE	SHEET	DWG. NO.	REV.
.75 : 1	10 of 10	197C540	Y

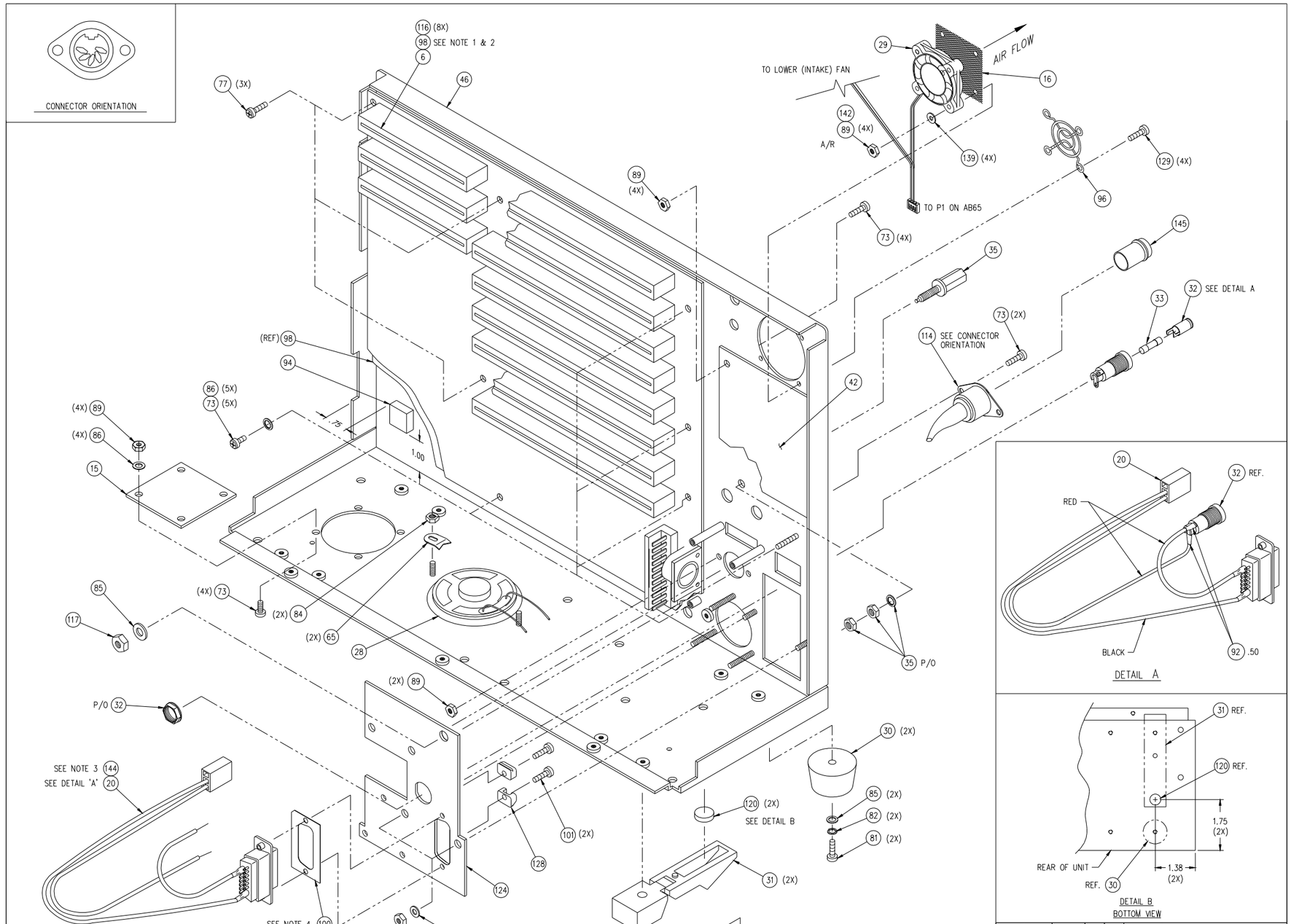

NOTES:

1. USING P/N M020 LOCTITE (ITEM 103), GLUE A P/N NW02 NYLON WASHER (ITEM 116) CENTERED OVER EACH HOLE IN P/N HM50AJ INSULATOR (ITEM 98). GLUE THE WASHERS TO THE SIDE OF THE INSULATOR THAT IS AGAINST THE MOTHERBOARD WHEN INSTALLED IN THE UNIT.
2. INSTALL P/N HM50AJ INSULATOR (ITEM 98) ON BACK SIDE OF BOARD.
3. INSTALL P/N AC355A CABLE (ITEM 144) FOR 3155MVS-4-1 HARDWIRE OPTION.
4. CHAMFER CORNER .12 X 45° AT LOCATION SHOWN.

SCALE: 1 : 1

THIS DOCUMENT IS CONFIDENTIAL AND PROPRIETARY AND IS THE SOLE PROPERTY OF INVIVO RESEARCH INCORPORATED (IRI). IT IS NOT TO BE DISCLOSED TO ANY PARTY, REPRODUCED OR USED IN ANY OTHER MANNER WITHOUT WRITTEN CONSENT OF SAID COMPANY. INVIVO MAINTAINS THE RIGHT TO CHANGE SPECIFICATIONS AT ANY TIME WITHOUT PRIOR NOTICE.

UNLESS OTHERWISE SPECIFIED TOLERANCES ARE			
.XX = ±	DRAWN	CHY	10DEC97
.XXX = ±	DESIGNED	RM	10DEC97
ANGLES = ±	CHECKED		
	APPROVED		

INCHES — THIRD ANGLE PROJECTION

DO NOT SCALE THIS DRAWING !!!

INVIVO RESEARCH, INC.
12601 RESEARCH PARKWAY., ORLANDO, FL 32826

TITLE
ASSY: 3155MVS
MILLENNIA REMOTE DISPLAY CONTROLLER

CAD SCALE	SHEET	DWG. NO.	REV.
.75 : 1	2 of 10	197C540	Y

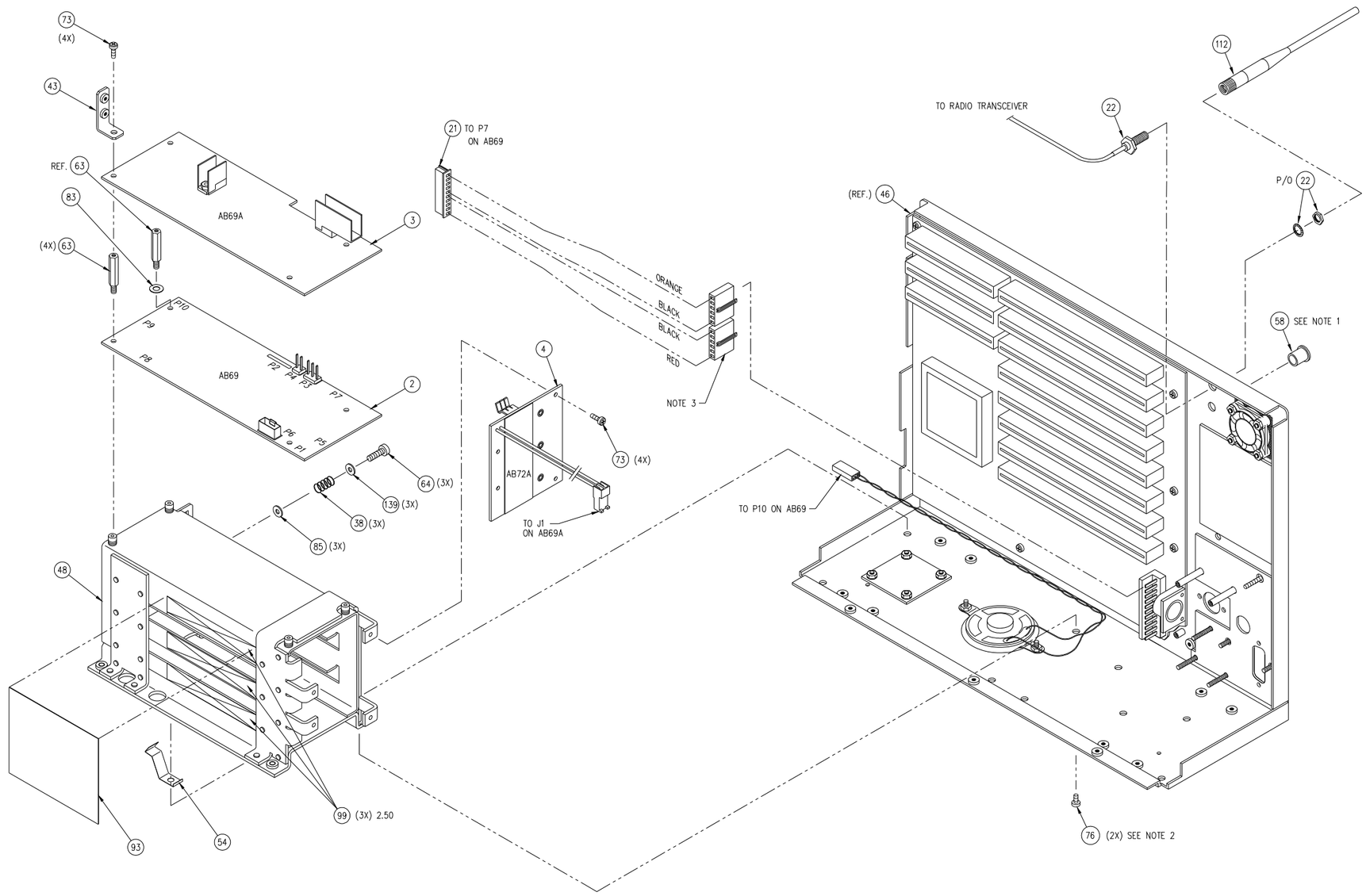

NOTES:

1. INSERT P/N H058A HOLE PLUG (ITEM 58) IN POSITION MARKED "GAS ZERO".
2. INSTALL ONLY THE TWO (2) REAR SCREWS IN THE BATTERY CAGE AT THIS LEVEL.
3. AFTER INSTALLING P/N AC269 CABLE (ITEM 21), APPLY P/N M008A RTV (ITEM 104) TO THE CABLE CONNECTORS AND HEADER ON P/N AB88 MOTHERBOARD (ITEM 6). ENSURE RTV CONTACTS BOTH THE CABLE CONNECTOR AND THE HEADER.

THIS DOCUMENT IS CONFIDENTIAL AND PROPRIETARY AND IS THE SOLE PROPERTY OF INVIVO RESEARCH INCORPORATED (IRI). IT IS NOT TO BE DISCLOSED TO ANY PARTY, REPRODUCED OR USED IN ANY OTHER MANNER WITHOUT WRITTEN CONSENT OF SAID COMPANY. INVIVO MAINTAINS THE RIGHT TO CHANGE SPECIFICATIONS AT ANY TIME WITHOUT PRIOR NOTICE.

UNLESS OTHERWISE SPECIFIED TOLERANCES ARE			
.XX = ±	DRAWN	CHY	10DEC97
.XXX = ±	DESIGNED	RM	10DEC97
ANGLES = ±	CHECKED		
	APPROVED		

INCHES — THIRD ANGLE PROJECTION

DO NOT SCALE THIS DRAWING !!!

INVIVO RESEARCH, INC.
12601 RESEARCH PARKWAY., ORLANDO, FL 32826

TITLE
ASSY: 3155MVS
MILLENNIA REMOTE DISPLAY CONTROLLER

CAD SCALE	SHEET	DWG. NO.	REV.
.75 : 1	3 of 10	197C540	Y

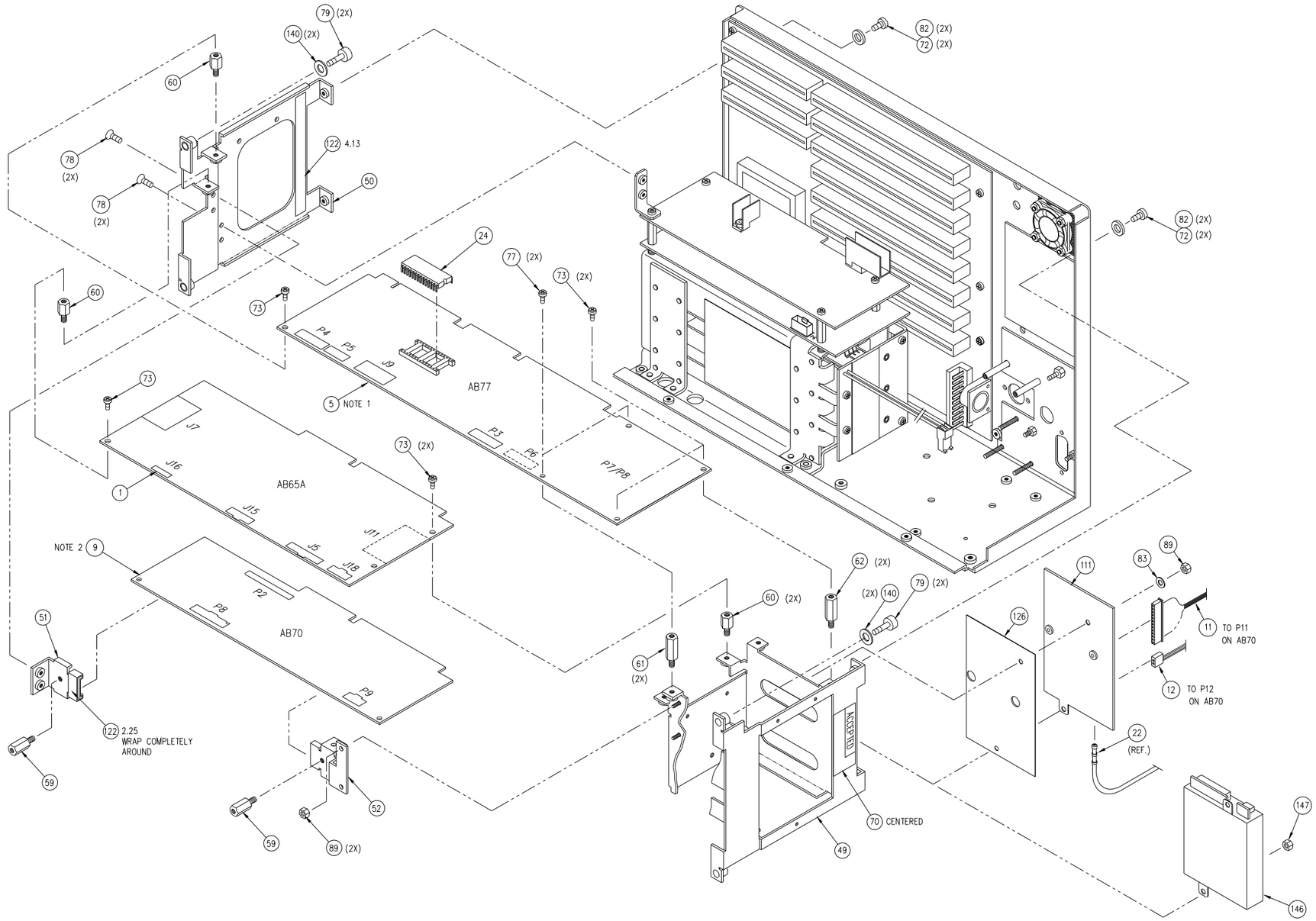

NOTES:

1. ON P/N AB77 (ITEM 5) FOR 3 VOLT DISPLAY, JUMPER PINS 1 AND 2 ON JMP14 AND JMP15.
   FOR 5 VOLT DISPLAY, JUMPER PINS 2 AND 3 ON JMP14 AND JMP15.
2. ON P/N AB70 (ITEM 9), FOR TELEMETRY UNITS, REMOVE P/N PA318B SHUNT FROM PINS 2 & 3 AND INSTALL ON P10, PINS 1 & 2. REMOVE P/N PA318B FROM JMP8 AND JMP9.
   FOR 3156-1 OR 3155MVS-4-1 HARDWIRE OPTION, INSTALL P/N PA318B ON P10, PINS 2 & 3, JMP6, PINS 1 & 2 AND JMP9, PINS 1 & 2.

COMM. OPTION 2, TELEMETRY, SIEMENS

THIS DOCUMENT IS CONFIDENTIAL AND PROPRIETARY AND IS THE SOLE PROPERTY OF INVIVO RESEARCH INCORPORATED (IRI). IT IS NOT TO BE DISCLOSED TO ANY PARTY, REPRODUCED OR USED IN ANY OTHER MANNER WITHOUT WRITTEN CONSENT OF SAID COMPANY. INVIVO MAINTAINS THE RIGHT TO CHANGE SPECIFICATIONS AT ANY TIME WITHOUT PRIOR NOTICE.

UNLESS OTHERWISE SPECIFIED TOLERANCES ARE			
.XX = ±	DRAWN	CHY	10DEC97
.XXX = ±	DESIGNED	RM	10DEC97
ANGLES = ±	CHECKED		
	APPROVED		

INCHES — THIRD ANGLE PROJECTION

DO NOT SCALE THIS DRAWING !!!

INVIVO RESEARCH, INC.
12601 RESEARCH PARKWAY., ORLANDO, FL 32826

TITLE
ASSY: 3155MVS
MILLENNIA REMOTE DISPLAY CONTROLLER

CAD SCALE	SHEET	DWG. NO.	REV.
.75 : 1	4 of 10	197C540	Y

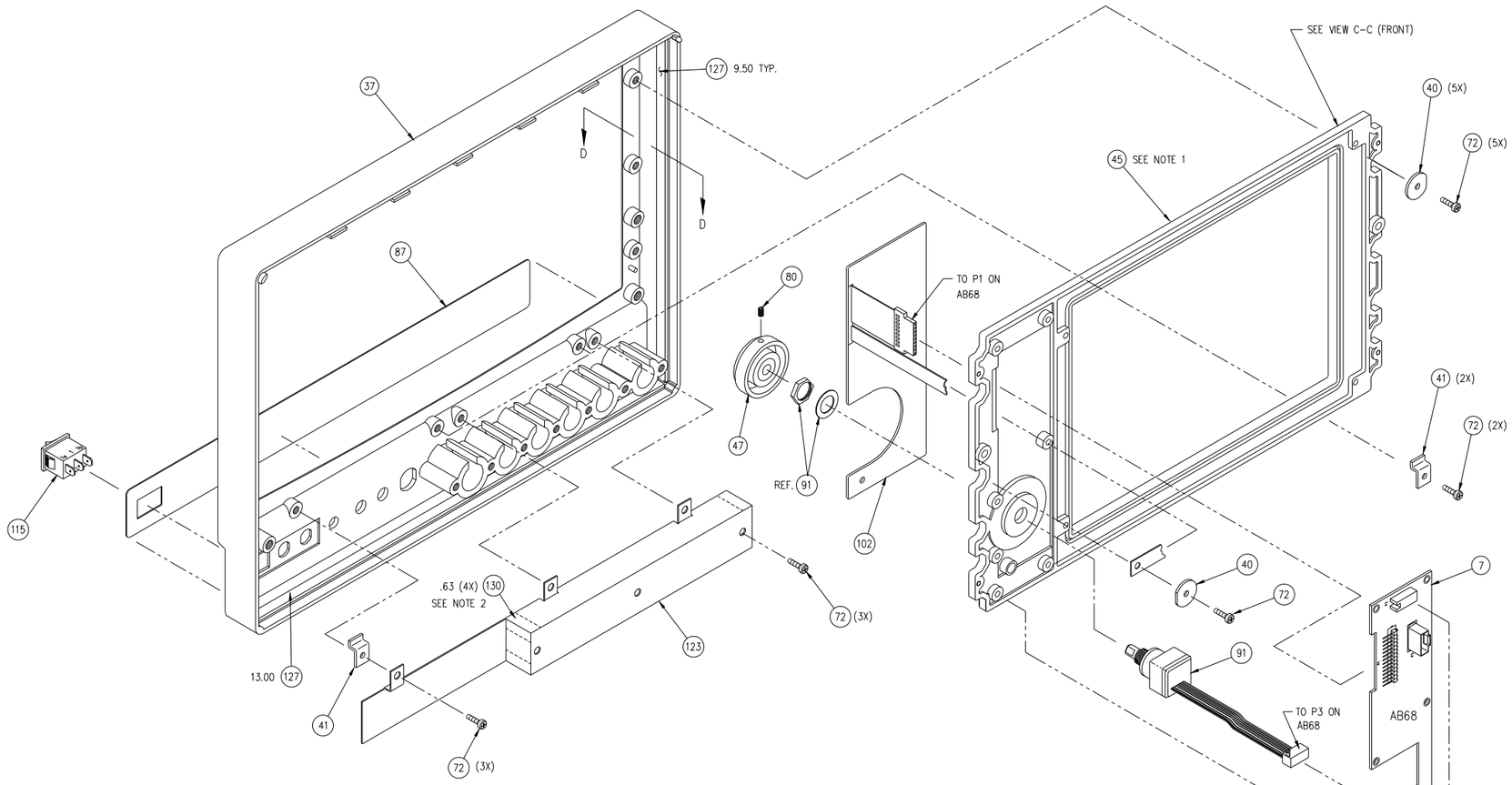

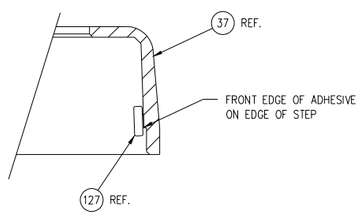

SECTION D-D
TYPICAL
CAD SCALE: 2:1

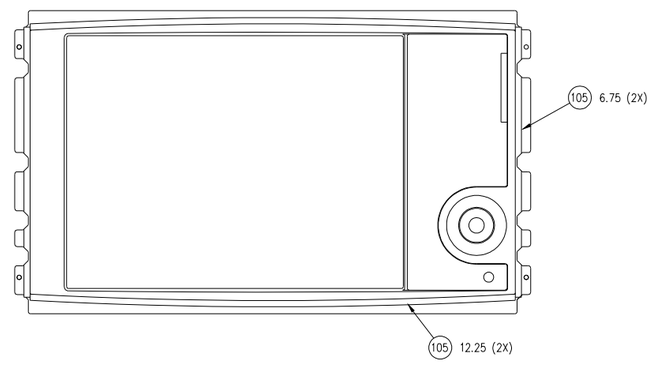

VIEW C-C
FRONT

NOTES:

1. APPLY ONE DROP OF P/N M020, ADHESIVE (ITEM 103) ALONG TOP MATING SEAM IN CENTER OF P/N HM50A2, FRONT PANEL MOLDING (ITEM 37) AND MATE WITH P/N HM50B1, DISPLAY INSERT MOLDING (ITEM 45). HOLD UNTIL SET. THEN APPLY A 1/8" BEAD OF P/N M008A, CLEAR RTV ADHESIVE/SEALANT (ITEM 104) ALONG THE TOP MATING SEAMS BETWEEN THE (3) CENTERMOST RIBS ON FRONT PANEL MOLDING.
2. APPLY P/N M092, COPPER TAPE (ITEM 130) TO THE INSIDE OF P/N HM50BD, CONNECTOR COVER (ITEM 123) AT EACH CORNER.

THIS DOCUMENT IS CONFIDENTIAL AND PROPRIETARY AND IS THE SOLE PROPERTY OF INVIVO RESEARCH INCORPORATED (IRI). IT IS NOT TO BE DISCLOSED TO ANY PARTY, REPRODUCED OR USED IN ANY OTHER MANNER WITHOUT WRITTEN CONSENT OF SAID COMPANY. INVIVO MAINTAINS THE RIGHT TO CHANGE SPECIFICATIONS AT ANY TIME WITHOUT PRIOR NOTICE.

UNLESS OTHERWISE SPECIFIED TOLERANCES ARE			
.XX = ±	DRAWN	CHY	10DEC97
.XXX = ±	DESIGNED	CHY	10DEC97
ANGLES = ±	CHECKED		
	APPROVED		

INCHES — THIRD ANGLE PROJECTION

DO NOT SCALE THIS DRAWING !!!

INVIVO RESEARCH, INC.
12601 RESEARCH PARKWAY., ORLANDO, FL 32826

TITLE
ASSY: 3155MVS
MILLENNIA REMOTE DISPLAY CONTROLLER

CAD SCALE	SHEET	DWG. NO.	REV.
.75 : 1	5 of 10	197C540	Y

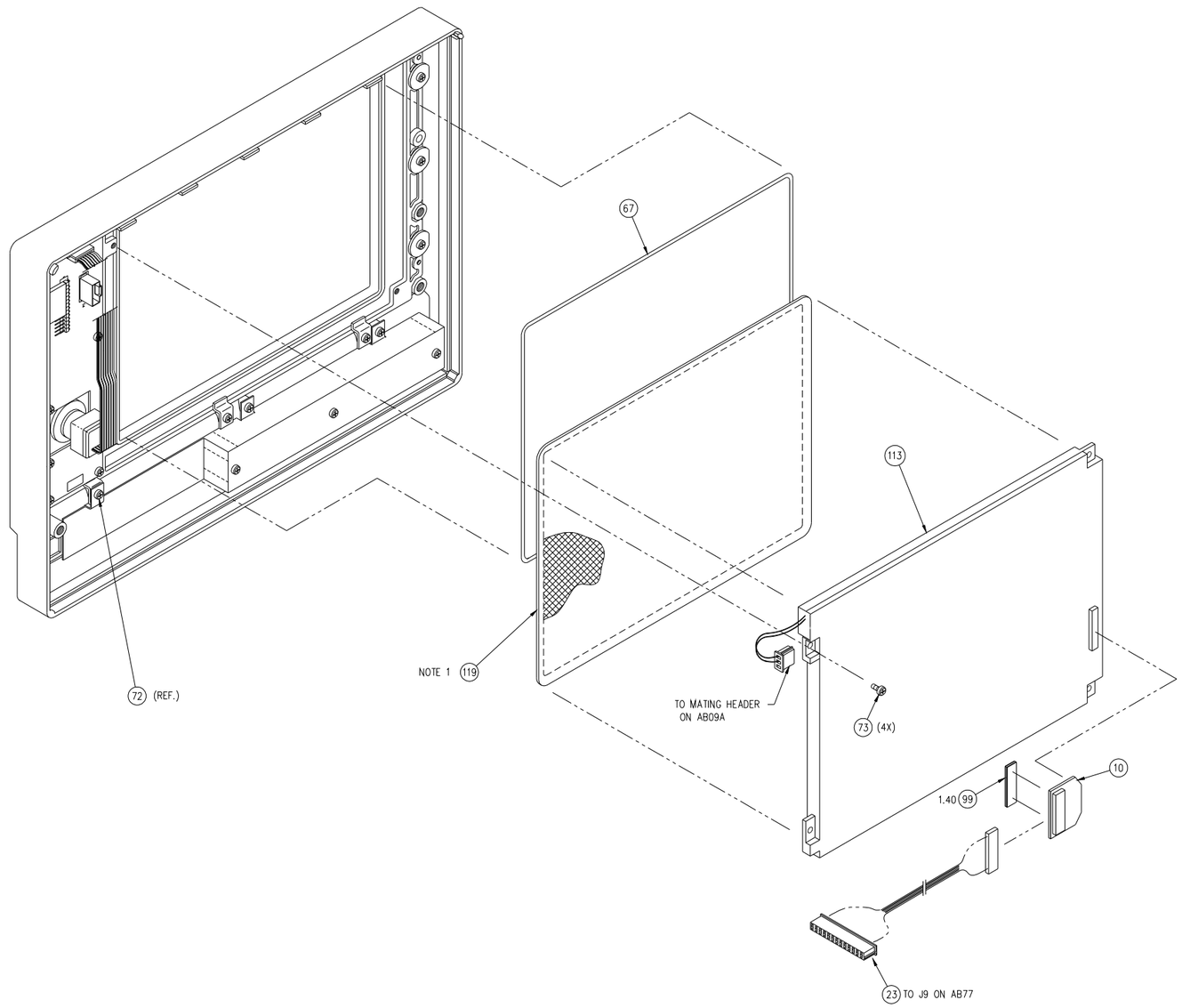

NOTES:

1. RECESSED EDGE TO BE PLACED AGAINST P/N H122 GASKET (ITEM 67).

THIS DOCUMENT IS CONFIDENTIAL AND PROPRIETARY AND IS THE SOLE PROPERTY OF INVIVO RESEARCH INCORPORATED (IRI). IT IS NOT TO BE DISCLOSED TO ANY PARTY, REPRODUCED OR USED IN ANY OTHER MANNER WITHOUT WRITTEN CONSENT OF SAID COMPANY. INVIVO MAINTAINS THE RIGHT TO CHANGE SPECIFICATIONS AT ANY TIME WITHOUT PRIOR NOTICE.

UNLESS OTHERWISE SPECIFIED TOLERANCES ARE		DRAWN	CHY	10DEC97
.XX = ±		DESIGNED	RM	10DEC97
.XXX = ±		CHECKED		
ANGLES = ±		APPROVED		

INCHES — THIRD ANGLE PROJECTION

DO NOT SCALE THIS DRAWING !!!

INVIVO RESEARCH, INC.

12601 RESEARCH PARKWAY., ORLANDO, FL 32826

TITLE

ASSY: 3155MVS

MILLENNIA REMOTE DISPLAY CONTROLLER

CAD SCALE	SHEET	DWG. NO.	REV.
.75 : 1	6 OF 10	197C540	Y

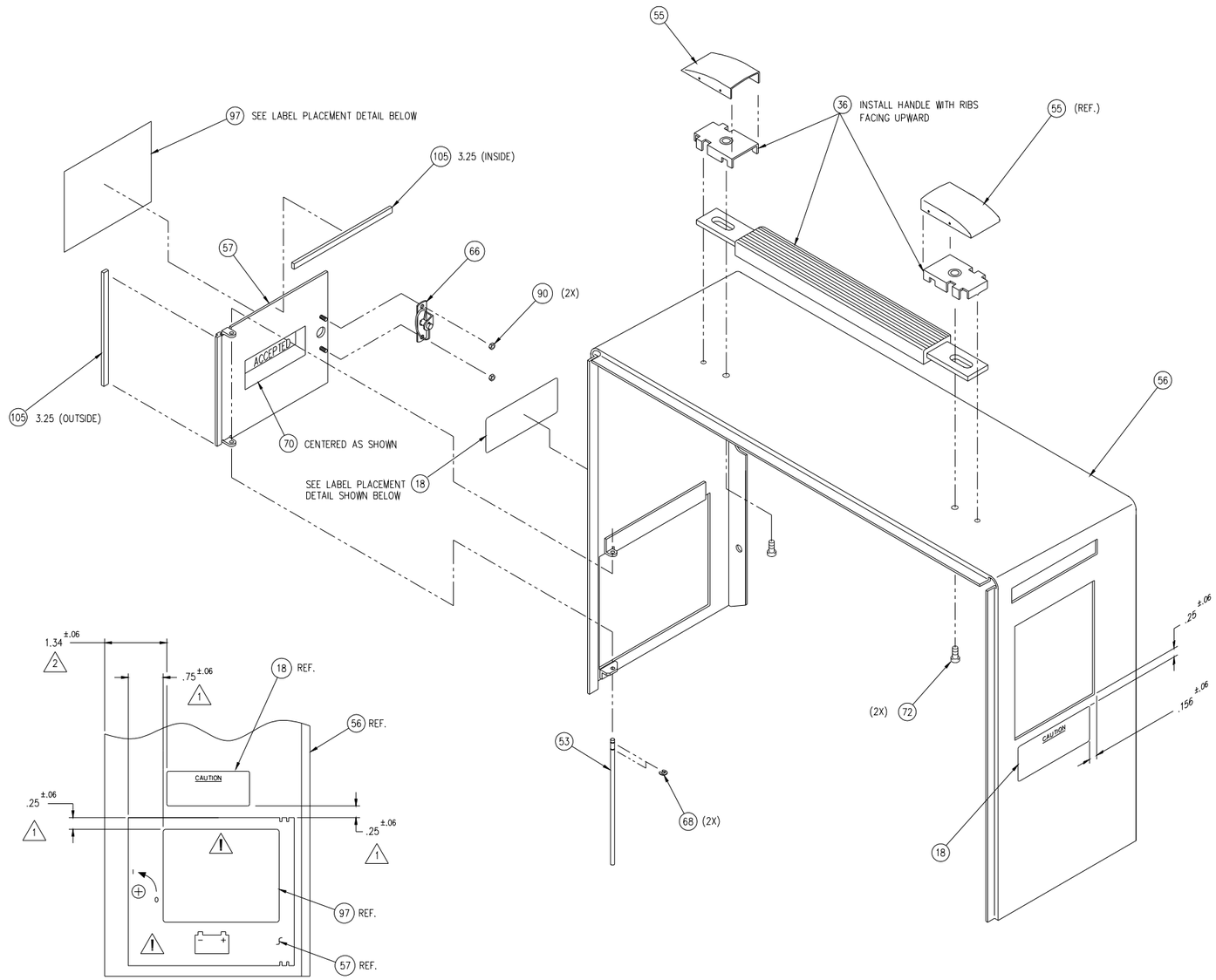

LABEL PLACEMENT DETAIL

1. DIMENSIONS ARE FROM EDGES OF P/N HM50W BATTERY DOOR (ITEM 57).
2. DIMENSION IS FROM EDGE OF P/N HM50T COVER (ITEM 56).

THIS DOCUMENT IS CONFIDENTIAL AND PROPRIETARY AND IS THE SOLE PROPERTY OF INVIVO RESEARCH INCORPORATED (IRI). IT IS NOT TO BE DISCLOSED TO ANY PARTY, REPRODUCED OR USED IN ANY OTHER MANNER WITHOUT WRITTEN CONSENT OF SAID COMPANY. INVIVO MAINTAINS THE RIGHT TO CHANGE SPECIFICATIONS AT ANY TIME WITHOUT PRIOR NOTICE.

UNLESS OTHERWISE SPECIFIED TOLERANCES ARE			
.XX = ±	DRAWN	CHY	10DEC97
.XXX = ±	DESIGNED	RM	10DEC97
ANGLES = ±	CHECKED		
	APPROVED		

INCHES — THIRD ANGLE PROJECTION

DO NOT SCALE THIS DRAWING !!!

INVIVO RESEARCH, INC.
12601 RESEARCH PARKWAY., ORLANDO, FL 32826

TITLE
ASSY: 3155MVS
MILLENNIA REMOTE DISPLAY CONTROLLER

CAD SCALE	SHEET	DWG. NO.	REV.
.75 : 1	7 of 10	197C540	Y

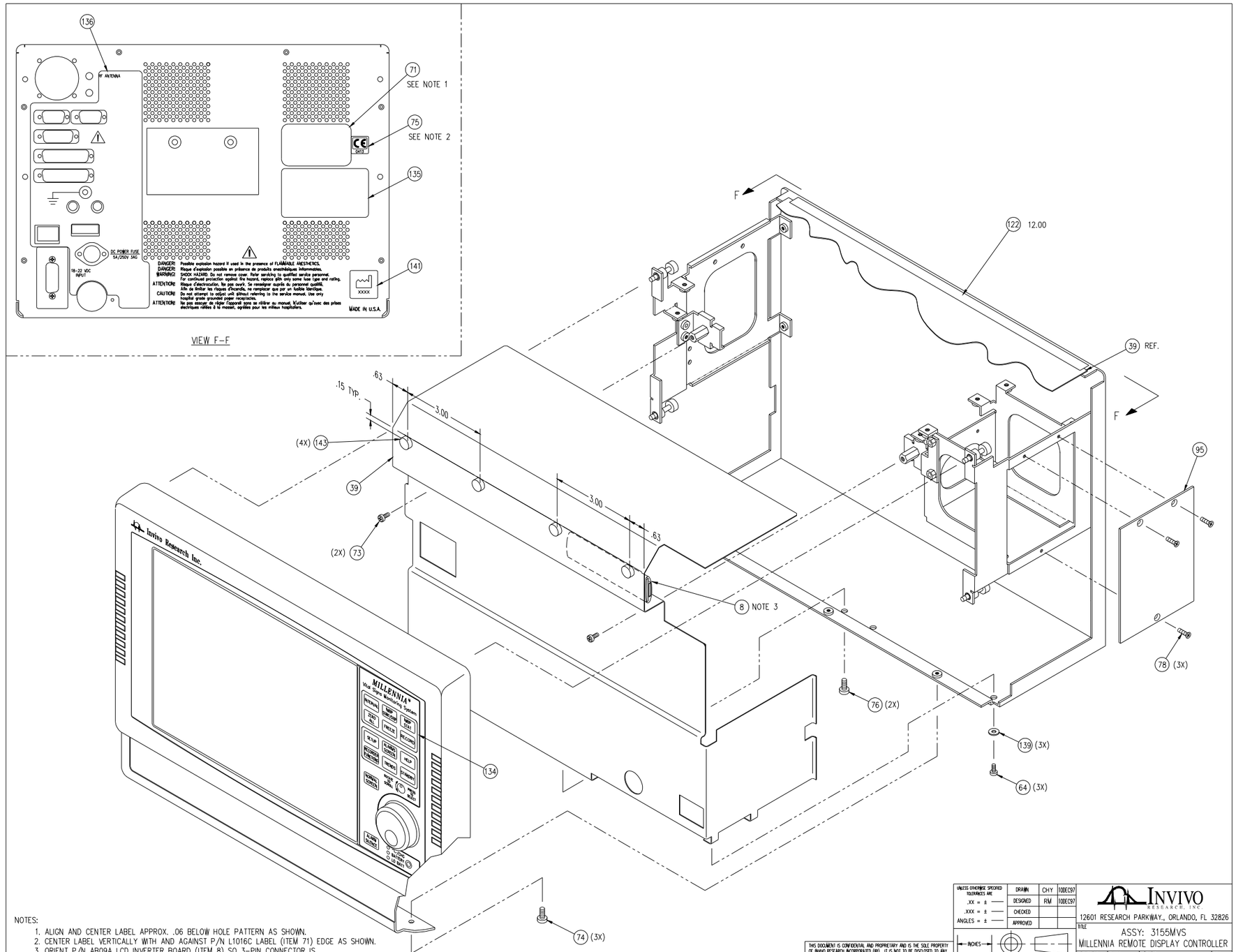

NOTES:

1. ALIGN AND CENTER LABEL APPROX. .06 BELOW HOLE PATTERN AS SHOWN.
2. CENTER LABEL VERTICALLY WITH AND AGAINST P/N L1016C LABEL (ITEM 71) EDGE AS SHOWN.
3. ORIENT P/N AB09A LCD INVERTER BOARD (ITEM 8) SO 3-PIN CONNECTOR IS TO THE RIGHT AND LOCATED AS SHOWN.

THIS DOCUMENT IS CONFIDENTIAL AND PROPRIETARY AND IS THE SOLE PROPERTY OF INVIVO RESEARCH INCORPORATED (IRI). IT IS NOT TO BE DISCLOSED TO ANY PARTY, REPRODUCED OR USED IN ANY OTHER MANNER WITHOUT WRITTEN CONSENT OF SAID COMPANY. INVIVO MAINTAINS THE RIGHT TO CHANGE SPECIFICATIONS AT ANY TIME WITHOUT PRIOR NOTICE.

UNLESS OTHERWISE SPECIFIED TOLERANCES ARE			
.XX = ±	DRAWN	CHY	10DEC97
.XXX = ±	DESIGNED	RM	10DEC97
ANGLES = ±	CHECKED		
	APPROVED		

INCHES — THIRD ANGLE PROJECTION

DO NOT SCALE THIS DRAWING !!!

INVIVO RESEARCH, INC.
12601 RESEARCH PARKWAY., ORLANDO, FL 32826

TITLE
ASSY: 3155MVS
MILLENNIA REMOTE DISPLAY CONTROLLER

CAD SCALE	SHEET	DWG. NO.	REV.
.75 : 1	8 of 10	197C540	Y

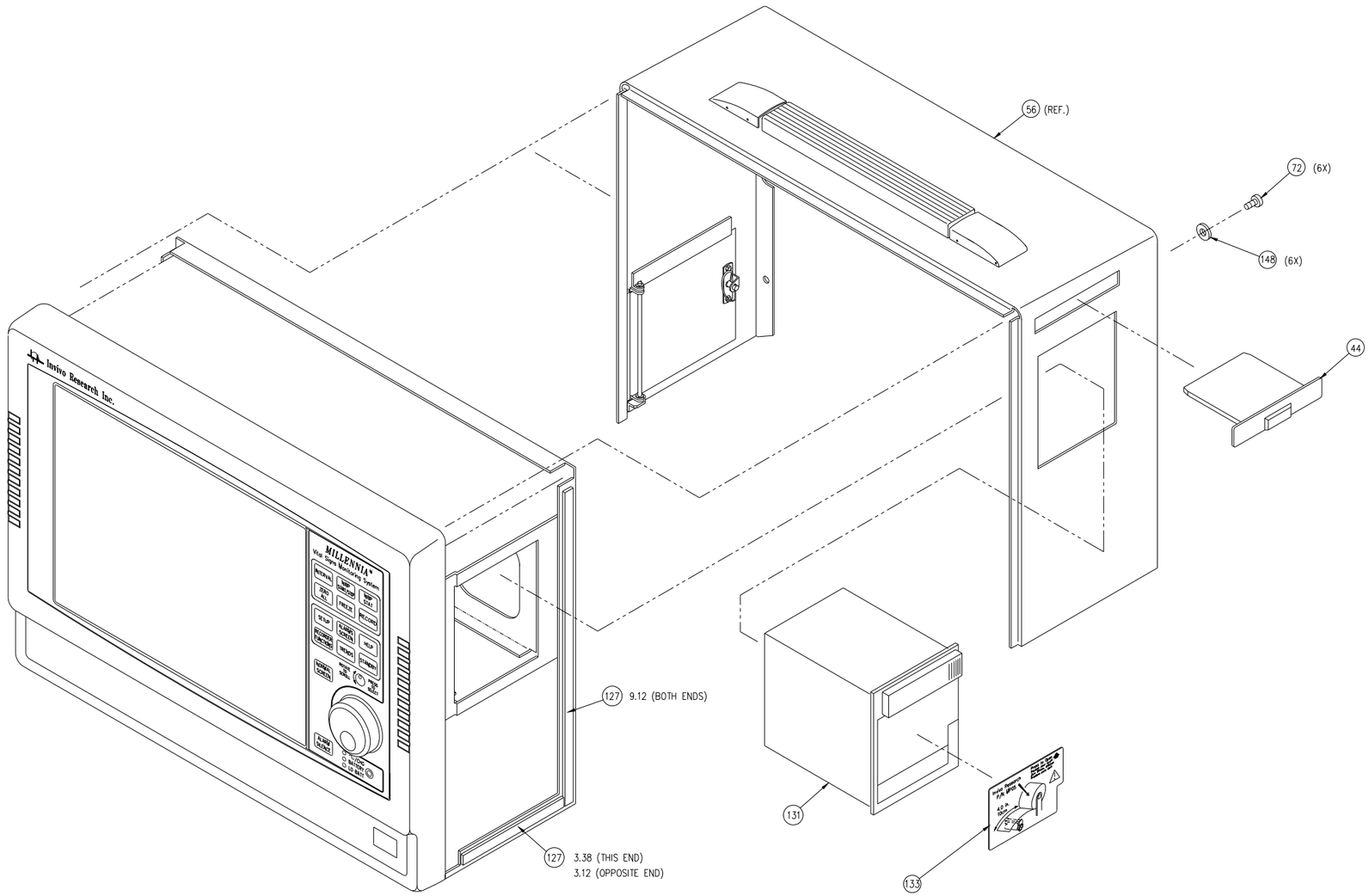

UNLESS OTHERWISE SPECIFIED TOLERANCES ARE	DRAWN	CHY	10DEC97
.XX = ±	DESIGNED	RM	10DEC97
.XXX = ±	CHECKED		
ANGLES = ±	APPROVED		

INCHES — THIRD ANGLE PROJECTION

DO NOT SCALE THIS DRAWING !!!

THIS DOCUMENT IS CONFIDENTIAL AND PROPRIETARY AND IS THE SOLE PROPERTY OF INVIVO RESEARCH INCORPORATED (IRI). IT IS NOT TO BE DISCLOSED TO ANY PARTY, REPRODUCED OR USED IN ANY OTHER MANNER WITHOUT WRITTEN CONSENT OF SAID COMPANY. INVIVO MAINTAINS THE RIGHT TO CHANGE SPECIFICATIONS AT ANY TIME WITHOUT PRIOR NOTICE.

INVIVO RESEARCH, INC.
12601 RESEARCH PARKWAY., ORLANDO, FL 32826

TITLE
ASSY: 3155MVS
MILLENNIA REMOTE DISPLAY CONTROLLER

CAD SCALE	SHEET	DWG. NO.	REV.
.75 : 1	9 of 10	197C540	Y

3155A-1-1 LANGUAGE OPTION 1, ENGLISH

ITEM / REF. DES.	PART NO.	QTY.	DESCRIPTION
87	L2088	1	LABEL, FRONT PANEL, 3155A
97	L2054	1	LABEL, BATTERY REMOVAL
106	9545	1	MANUAL, OPERATOR'S, 3155MVS/3155A
134	L2103	1	OVERLAY/GRAPHICS, 3500
136	L2064A	1	LABEL, BASEPLATE, 3155A, ENG

3155A-1-2 LANGUAGE OPTION 2, GERMAN

ITEM / REF. DES.	PART NO.	QTY.	DESCRIPTION
87	L2088A	1	LABEL, FRONT PANEL, 3155A EURO.
97	L2054G	1	LABEL, BATTERY REMOVAL, GERMAN
106	9549G	1	MANUAL, OPERATOR'S, 3155A, GERMAN
134	L2103G	1	OVERLAY/GRAPHICS, 3500, GERMAN
135	L2044G	1	LAB, WARNING, BASEPLATE, 3500, GERMAN
136	L2064AG	1	LABEL, BASEPLATE, 3155A, GER

3155A-1-3 LANGUAGE OPTION 3, FRENCH

ITEM / REF. DES.	PART NO.	QTY.	DESCRIPTION
87	L2088A	1	LABEL, FRONT PANEL, 3155A EURO.
97	L2054F	1	LABEL, BATTERY REMOVAL, FRENCH
106	9549F	1	MANUAL, OPERATOR'S, 3155A, FRENCH
134	L2103F	1	OVERLAY/GRAPHICS, 3500, FRENCH
136	L2064AF	1	LAB, BASEPLATE, 3155A, FRN.

3155A-1-4 LANGUAGE OPTION 4, SPANISH

ITEM / REF. DES.	PART NO.	QTY.	DESCRIPTION
87	L2088A	1	LABEL, FRONT PANEL, 3155A EURO.
97	L2054S	1	LABEL, BATTERY REMOVAL, SPANISH
106	9549S	1	MANUAL, OPERATOR'S, 3155A, SPANISH
134	L2103S	1	OVERLAY/GRAPHICS, 3500, SPN.
135	L2044S	1	LAB, WARNING, BASEPLATE, 3500, SPN.
136	L2064AS	1	LAB, BASEPLATE, 3155A, SPN.

3155A-1-5 LANGUAGE OPTION 5, ENGLISH/EURO.

ITEM / REF. DES.	PART NO.	QTY.	DESCRIPTION
87	L2088A	1	LABEL, FRONT PANEL, 3155A EURO.
97	L2054	1	LABEL, BATTERY REMOVAL
106	9549	1	MANUAL, OPERATOR'S, 3155A
134	L2103	1	OVERLAY/GRAPHICS, 3500
136	L2064A	1	LABEL, BASEPLATE, 3155A, ENG

3155A-1-6 LANGUAGE OPTION 6, ITALIAN

ITEM / REF. DES.	PART NO.	QTY.	DESCRIPTION
87	L2088A	1	LABEL, FRONT PANEL, 3155A EURO.
97	L2054I	1	LABEL, BATTERY REMOVAL, ITALIAN
106	9549I	1	MANUAL, OPERATOR'S, 3155A, ITALIAN
134	L2103I	1	OVERLAY/GRAPHICS, 3500, ITL.
135	L2044I	1	LAB, WARNING, BASEPLATE, 3500, ITL.
136	L2064AI	1	LAB, BASEPLATE, 3155A, ITL.

3155A-1-7 LANGUAGE OPTION 7, PORTUGUESE

ITEM / REF. DES.	PART NO.	QTY.	DESCRIPTION
87	L2088A	1	LABEL, FRONT PANEL, 3155A EURO.
97	L2054P	1	LABEL, BATTERY REMOVAL, PORTUGUESE
106	9549P	1	MANUAL, OPERATOR'S, 3155A, PRT.
134	L2103P	1	OVERLAY/GRAPHICS, 3500, PRT.
135	L2044P	1	LAB, WARNING, BASEPLATE, 3500, PRT.
136	L2064AP	1	LABEL, BASEPLATE, 3155A, PRT.

3155A-2-1 VOLTAGE OPTION 1, 110V

ITEM / REF. DES.	PART NO.	QTY.	DESCRIPTION
116	AC348	1	CAB., POWER ADAPTER, 3150, 25 FT.
118	AS153	1	POWER ADAPTER, 3150
121	AC348A	1	CAB., POWER ADAPTER, 3150, 5 FT.
125	HH08	2	HOOK, PLASTIC, WHITE, RECT., SUPER
137	AS18	1	ASSY., LINE CORD, 110V, TESTED
138	FU13	2	FUSE, 3/4 AMP, SLO-BLO, 313.750

3155A-2-2 VOLTAGE OPTION 2, 220V EURO./GERMAN

ITEM / REF. DES.	PART NO.	QTY.	DESCRIPTION
116	AC348	1	CAB., POWER ADAPTER, 3150, 25 FT.
118	AS153	1	POWER ADAPTER, 3150
121	AC348A	1	CAB., POWER ADAPTER, 3150, 5 FT.
125	HH08	2	HOOK, PLASTIC, WHITE, RECT., SUPER
137	AS18G	1	ASSY., LINE CORD, 10A/220-230V, EURO.
138	FU25	2	FUSE, 4/10 AMP, 250V, SLO-BLO, 3AG

3155A-2-3 VOLTAGE OPTION 3, 220V UNIVERSAL

ITEM / REF. DES.	PART NO.	QTY.	DESCRIPTION
116	AC348	1	CAB., POWER ADAPTER, 3150, 25 FT.
118	AS153	1	POWER ADAPTER, 3150
121	AC348A	1	CAB., POWER ADAPTER, 3150, 5 FT.
125	HH08	2	HOOK, PLASTIC, WHITE, RECT., SUPER
137	AS18A	1	ASSY., LINE CORD, 220V, TESTED
138	FU25	2	FUSE, 4/10 AMP, 250V, SLO-BLO, 3AG

3155A-2-4 VOLTAGE OPTION 4, 100V

ITEM / REF. DES.	PART NO.	QTY.	DESCRIPTION
116	AC348	1	CAB., POWER ADAPTER, 3150, 25 FT.
118	AS153J	1	POWER ADAPTER, 3150
121	AC348A	1	CAB., POWER ADAPTER, 3150, 5 FT.
125	HH08	2	HOOK, PLASTIC, WHITE, RECT., SUPER
137	AS18A	1	ASSY., LINE CORD, 220V, TESTED
138	FU13	2	FUSE, 3/4 AMP, SLO-BLO, 313.750

3155A-3-1 RECORDER OPTION 1, DUAL CHANNEL RECORDER

ITEM / REF. DES.	PART NO.	QTY.	DESCRIPTION
131	HT16	1	RECORDER, THERMAL, GEN. SCANG. AR42
132	MP05	1	PAPER, THERM. ARRAY, BLACK, 50mm
133	L2036	1	LABEL, PRINTER DOOR (GEN. SCANG.)

3155A-4-1 COMM. OPTION 1, HARDWIRE

ITEM / REF. DES.	PART NO.	QTY.	DESCRIPTION
11	AC329A	-1	CABLE, DATA, TRANSCEIVER, TELEMETRY, 16"
12	AC330A	-1	CABLE, POWER, TRANSCEIVER, TELEMETRY, 16"
20	AC355	-1	CABLE, LOW VOLTAGE DC POWER, 3155
22	AC331	-1	CABLE ANTENNA, TELEMETRY, 8 INCH
25	AM46	REF	PCMCIA CARD, FLASH MEM. OP. SYS., 3500
25	AM69	-REF	PCMCIA CARD, FLASH MEM. OP. SYS., 3155A/MVS
83	NW33	-1	WASHER, NYLON, .120 X .250 X .010
88	H058A	1	PLUG, HOLE, .25 DIA, WHITE, NYLON
89	N002	-1	NUT, HEX, #4-40, ZN
111	AB182B	-1	ASSY, 2410 RADIO PCA
112	HE61	-1	ANTENNA, 2.4 GHZ, RIGHT ANGLE
144	AC355A	1	CABLE, LOW VOLTAGE DC POWER, 3150
154	HI66	-1	INSULATOR, 2410 RADIO PCA

3155A-4-2 COMM. OPTION 2, TELEMETRY, SIEMENS

ITEM / REF. DES.	PART NO.	QTY.	DESCRIPTION
25	AM46	REF	PCMCIA CARD, FLASH MEM. OP. SYS., 3500
25	AM69	-REF	PCMCIA CARD, FLASH MEM. OP. SYS., 3155A/MVS
83	NW33	-1	WASHER, NYLON, .120 X .250 X .010
111	AB182B	-1	ASSY, 2410 RADIO PCA
154	HI66	-1	INSULATOR, 2410 RADIO PCA
167	HE60	1	TRANSCEIVER, 2.4 GHZ, 115200 BPS
168	N002	1	NUT, HEX, #4-40, ZN

ITEM / REF. DES.	PART NO.	QTY.	DESCRIPTION
169	NW05	6	WASHER, FLAT, #6 x .312 x .032
168	SEE CHART	—	TRANSCEIVER, 2.4 GHZ, 115200 BPS
167	SEE CHART	—	NUT, HEX, #4-40, ZN
166	HP86A	1	LUER LOCK, MALE, MALE THD, 1/4-28
165	HP87A	1	LUER LOCK, FEM, FEM. THD, 1/4-28
164	ED01	1	NAFION TUBE, ME DRYER
163	NW26	1	LOCKWASHER, IT, #4, SS, NON-MAG.
162	AK02A	1	KIT, ACCESSORY, START UP, GAS, 20 FT.
161	AS159A	1	ASSY, ANESTH. AGNT. ANLYZR. MODULE
160	AP50	1	ASSY, FIO2 SENSOR COUPLER, 3500
159	AC363A	1	CAB, INTRCNCT, A/D, AGENT, 3155A
158	AC362	1	CAB, INTCN, PWR. SUPPLY, AGENT I.D.
157	HM70V	3	SPACER, MODIFIED, FIO2 SENSOR
156	HM70AJ	1	KEEPER, FIO2 ADAPTER, 3500
155	NS109	1	SCR, #6-32 X 7/16 LG, SHMS, BLK.
154	HI66	1	INSULATOR, 2410 RADIO PCA
153	TL003	1	WRENCH, 7/64 HEX KEY
ITEM / REF. DES.	PART NO.	QTY.	DESCRIPTION

ITEM / REF. DES.	PART NO.	QTY.	DESCRIPTION
152	9461	1	KIT, ANESTH. OXYGEN SENSOR, 3500
151	HP112	1	LUER, FEMALE TEE
150	M198	A/R	ADHESIVE, LOCTITE 569 SEALANT
149	M014	REF	COMPOUND, HEAT SINK, 276-1372
148	NW02	8	WASHER, NYLON, #6 X .312 X .032
147	HP106	1	FITTING, BLKHD, LUER, FEM, BRASS, 1/16
146	HP115	33.50	TUBING, VITON, 1/16 I.D. X 1/8 O.D.
145	HC01	2	CLAMP, 1/4, NX2
144	HS56	1	STANDOFF, 3/16 HEX, M/F, 4-40 X .500
143	HI58	1	SPACER, 40mm FAN
142	M007	A/R	ADHESIVE, LOCTITE 362, RED, THREADLOCK
141	L185	1	LABEL, DATE OF MANUFACTURE
140	NW08	4	LOCKWASHER, INT. TOOTH, #8, SS
139	NW12	14	WASHER, #4 X .125 X .312 X .030
138	SEE CHART	—	FUSE
137	SEE CHART	—	ASSY., LINE CORD
136	SEE CHART	—	LAB, BASEPLATE, 3155MVS
135	SEE CHART	—	LAB, WARNING, BASEPLATE, 3500
134	SEE CHART	—	OVERLAY/MEMBRANE KEYPAD, 3500
133	SEE CHART	—	LABEL, PRINTER DOOR
132	SEE CHART	—	PAPER, THERM. ARRAY, BLACK, 50mm
131	SEE CHART	—	RECORDER, THERMAL
130	M092	3.25	TAPE, SHIELDING, COPPER 1" WIDE
129	NS35	8	SCR., #4-40 x 3/4 LG., PHMS-XR, ZN
128	H079	1	LATCH BLOCK, "D" CONN, .090 PNL.
127	H112	56.75	GASKET, EMI, CHO-FOAM, .276W X .079H
126	L2102	1	SWITCHPAD, MEMBRANE, 3500
125	SEE CHART	—	HOOK, PLASTIC, RECT., WHITE, SUPER
124	HM50BRA	1	COVER, CONNECTOR, BASEPLATE, 3155A
123	HM50BDA	1	COVER, CONNECTOR, FR. PNL, 3155A
122	M088A	15.50	TAPE, KAPTON, .004 THK., 1/2" WD, ROLL
121	SEE CHART	—	CAB., POWER ADAPTER, 3150, 5 FT.
120	FE02	2	FEET, GREY
119	H125	1	SCREEN, EMI/RF, 80 OPI, 8.87x6.73
118	SEE CHART	—	POWER ADAPTER, 3150
117	N003	1	NUT, HEX, #8-32, ZN
116	SEE CHART	—	CAB., POWER ADAPTER, 3150, 25 FT.
115	S015	1	SWITCH, ROCKER, 1803-1121
114	FE05	4	FOOT, CLR. POLYURTHN., .312 DIA. x .085
113	HE70	1	DISPLAY, LCD, COLOR, 10.4" DIAG. ACTIVE, 3V
112	HE61	1	ANTENNA, 2.4 GHz, RIGHT ANGLE
111	AB182B	1	ASSY, 2410 RADIO PCA
110	M149	1	INSERT, BATTERIES
109	M148	1	BOX, ACC., 15.75 X 12.5 X 2.75
108	M145A	1	FILLER, INSERT, FOAM, 3500
107	M145	1	BOX, SHIPPING, 3500
106	SEE CHART	—	MANUAL, OPERATOR'S, 3155MVS/3155A
105	H120	44.50	GASKET, EMI, .157W X .039H, PSA
104	M008A	REF	ADHESIVE/SEALANT, RTV, CLEAR, 732
103	M020	REF	ADHESIVE, LOCTITE, TOUGHENED, 411
102	HS28A	10	SCREWLOCK, FEMALE, #4-40 X .250 LG.
101	NS81N	1	SCR, #4-40 X 5/16 LG, FIHMS-XR, NM
100	PA366	1	GASKET, EMI/RFI, 15 PIN CONN.
99	M004	9.00	TAPE, ACRYLIC, DS, .010 THK X .50 WD.
98	HM50AJ	1	INSULATOR, MOTHERBOARD PCA, 3500
97	SEE CHART	—	LABEL, BATTERY REMOVAL
96	HF05	2	FINGER GUARD, 40mm FAN
95	HM50AE	1	COVER, RECORDER, 3500
94	FE06	1	BUMPER, PROTECTIVE, BLK, .50W X .23H
93	HI40	1	INSULATOR, 2.70 X 3.25 - 3500
92	WT05	1.0"	HEAT SHRINK 3/16" I.D. BLACK
91	S035	1	ENCODER, OPTICAL, 24 POS., PB, MINI
90	N006	2	NUT, HEX, #2-56, ZN
89	N002	20	NUT, HEX, #4-40, ZN
88	SEE CHART	—	PLUG, HOLE, .25 DIA, WHITE, NYLON
87	SEE CHART	—	LABEL, FRONT PANEL, 3155A
86	NW09	11	LOKWSHR, IT,SS, #4 X .200 X .020
85	NW32	6	FLTW, #8, REG. SERIES - ZN
84	N001	2	NUT, HEX, #6-32, ZN
83	NW33	8	WASHER, NYLON, .120 X .250 X .010
82	NW01	6	LOKWSHR, IT,SS, #6 X .285 X .040
81	NS06	2	SCR, #6-32 X 1/2 LG. PHMS-XR, ZN
80	NS95	1	SCR, SET, #4-40 X 3/16, CP. PT., SS
79	NS93	4	SCR, CAPTIVE, #8-32 X 1/2, SHCS
78	NS98	9	SCR, #4-40 X 1/4 LG. FHMS-XR, ZN
77	NS50	4	SCR, #4-40 X 1/4 LG. PHMS-NY
ITEM / REF. DES.	PART NO.	QTY.	DESCRIPTION

ITEM / REF. DES.	PART NO.	QTY.	DESCRIPTION
76	NS05	4	SCR, #8-32 X 5/16 LG. PHMS-XR, ZN
75	L137A	1	LABEL, C.E. COMPLIANCE, MDD (SEMKO)
74	NS10	2	SCR, #6-32 X 3/8 LG. PHMS-XR, ZN
73	NS04	30	SCR, #4-40 X 1/4 LG. PHMS-XR, ZN
72	NS02	26	SCR, #6-32 X 1/4 LG. PHMS-XR, ZN
71	L1016C	1	LABEL, MODEL/SERIAL, GENERIC
70	L014	2	LABEL "ACCEPTED" W02
69	H139	1	CAP, PROTECTIVE, KEYBOARD CONNECTOR
68	H086	2	RING, RETAINING, 3500
67	H122	30.50	GASKET, SHIELDING, EMI, .118 X .118
66	H088	1	LATCH, SPRING, SLOTTED HEAD
65	H006	2	SPEAKER CLIP 48SC004
64	NS26	6	SCR., #4-40 X 3/8 LG., PHMS-XR, ZN
63	HS77	4	STANDOFF. .25 HEX, M/F, 4-40 X .875, AL
62	HS49	2	STANDOFF, HEX, M/F, 4-40 X .500
61	HS55	2	STANDOFF, HEX, M/F, 4-40 X .500 NY
60	HS47	4	STANDOFF, HEX, M/F, 4-40 X .250
59	HS48	2	STANDOFF, HEX, M/F, 4-40 X .375
58	AB288	1	CAB., ANALOG OUT, 3500
57	HM50W	1	DOOR, BATTERY, OMNI-TRAK 3500
56	HM50T	1	COVER, 3500
55	HM50R	1	END CAP, PAINTED, 3500
54	HM50AD	1	SPRING, DOOR, 3500
53	HM50X	1	PIN, HINGE, 3500
52	HM50J3A	1	RET. BRKT, P.C. BD, R.S. BTTM, 3155MVS
51	HM50J2A	1	RET. BRKT, P.C. BD, L.S. BTTM, 3155MVS
50	HM50J	1	BRKT., SUPPORT, LEFT SIDE, 3500
49	HM50BL	1	BRKT., SUPPORT, RT. SIDE, 3500
48	HM50EA	1	CAGE, BATTERY, 3500 SERIES
47	HM50D	1	SELECTOR KNOB (FINGER TURN), 3500
46	HM50BK	1	BASEPLATE, 3500 (FIO2)
45	HM50B1	1	COND. PAINT, DISPLAY INSERT MOLDING, 3500
44	HM50AP	1	COVER, PCMCIA, OMEGA 3500
43	HM50AN	1	BRKT., STIFFENER, SUPPORT, 3500
42	AB93	1	PCA, REAR PANEL CONNECTORS, 3500
41	HM50AH	3	CLAMP, BEZEL BTTM, OMNI-TRAK 3500
40	HM50AG	6	CLAMP, BEZEL SIDE, OMNI-TRAK 3500
39	HM50BJ	1	SHIELD, INNER, 3155
38	H137	3	SPRING, COMPRESSION, .24 O.D. x .44 LG., SS
37	HM50A2	1	COND. PAINT, FRONT PANEL MOLDING, 3500
36	HH09B	1	VINYL HANDLE & INSERT, FROM HH09
35	HE16	1	BINDING POST, METAL
34	HB10	3	BATTERY, 12V, RECHARGABLE
33	FU31	1	FUSE, 5 AMP, 5 x 20mm, SLO-BLO
32	FU30	1	FUSEHOLDER, 5 x 20mm, 90° TERM., PNL. MNT.
31	FE08	2	FEET, TIP-UP, PLASTIC
30	FE07	2	FOOT, CASE, .82 DIA. X .59 H
29	AS141A	1	FAN, DUAL, 3500
28	AS137	1	ASSY, SPEAKER, OMNI-TRAK 3500
27	AM45	1	PROM SET, MULTIFUNCTION I/O, 3500
26	AM40	1	PROM SET, KEYBOARD INTERFACE, 3500
25	AM69	REF	PCMCIA CARD, FLASH MEM. OP. SYS., 3155A/MVS
24	AM44C	1	PROM SET, VIDEO BIOS, ACTIVE, LG SEMICON, 3500
23	AC252	1	CAB, SHARP ACTIVE LCD DISPLAY, 3500
22	AC331	1	CABLE, ANTENNA, TELEMETRY, 8"
21	AC269	1	CAB, MOTHER BD. PWR, OMNI 3500
20	AC355	1	CAB, LOW VOLTAGE DC POWER, 3155
19	AC261	1	CABLE, XENTEK, INVRTR/VGA, 3500
18	L2082	2	LABEL, CAUTION, 3155A
17	AC257	1	CABLE, RIBBON, 24P, .025 CTRS, 8"
16	H134	2	SCREEN, EMI/RFI, 40mm FAN
15	AC266	1	CAB, KEYBOARD, 3500
14	AC113	1	CAB, PWR SUPPLY/AD BD., 3500
13	AC270	1	CAB, FRONT SWITCH PWR, 3500
12	AC330A	1	CABLE, POWER, TRANSCEIVER, TELEMETRY, 16"
11	AC329A	1	CABLE, DATA, TRANSCEIVER, TELEMETRY, 16"
10	AB97	1	PCA, SHARP 321 CBL. ADPTR., (SHARP ONLY)
9	AB70	1	PCA, MULTI-FUNCTION I/O, 3500
8	AB09A	1	PCA, INVERTER, LCD, LS380, XENTEK
7	AB68	1	PCA, KEYBD. INTRFCE, OMNI-TRAK, 3500
6	AB88	1	PCA, PC/AT MOTHERBD, w/MPRCSR
5	AB77	1	PCA, PCMCIA/VGA DISPLAY, 3500
4	AB72A	1	PCA, POWER INTRCNCT, OMEGA 3500
3	AB69A	1	PCA, PWR SWITCHER/BATT CHARGR, 3500
2	AB69	1	PCA, POWER SUPPLY, 3500
1	AB65A	1	ASSY, A/D PCA, 3500
ITEM / REF. DES.	PART NO.	QTY.	DESCRIPTION

REV.	DESCRIPTION	BY	DATE
N	PER ECN #8796	CHY	1MAY02
M	PER ECN #8496	CHY	13DEC01
L	PER ECN #8394	SR	31AUG01
K	PER ECN #8399	CHY	7AUG01
J	PER ECN #8115	SR	30MAY01
H	PER ECN #8173	CHY	5FEB01
G	PER ECN #8082	CHY	8DEC00
F	PER ECN #8061	CHY	10OCT00
E	PER ECN #7869	CHY	18AUG00
D	PER ECN #7615	CHY	10AUG00
C	PER ECN #7669	CHY	7JUL00
B	PER ECN #7688	CHY	23MAR00
A	RELEASED, ECN #7512	KCO	11JAN00

REV.	DESCRIPTION	BY	DATE
C	PER ECN #7669	CHY	7JUL00
B	PER ECN #7688	CHY	23MAR00
A	RELEASED, ECN #7512	KCO	11JAN00

THIS DOCUMENT IS CONFIDENTIAL AND PROPRIETARY AND IS THE SOLE PROPERTY OF INVIVO RESEARCH INCORPORATED (IRI). IT IS NOT TO BE DISCLOSED TO ANY PARTY, REPRODUCED OR USED IN ANY OTHER MANNER WITHOUT WRITTEN CONSENT OF SAID COMPANY. INVIVO MAINTAINS THE RIGHT TO CHANGE SPECIFICATIONS AT ANY TIME WITHOUT PRIOR NOTICE.

UNLESS OTHERWISE SPECIFIED TOLERANCES ARE
.XX = ± —
.XXX = ± —
ANGLES = ± —

DRAWN	KCO	11JAN00
DESIGNED	RLM	7JAN00
CHECKED		
APPROVED		

INCHES — THIRD ANGLE PROJECTION

DO NOT SCALE THIS DRAWING !!!

INVIVO RESEARCH, INC.
12601 RESEARCH PARKWAY, ORLANDO, FL 32826

TITLE
ASSY: 3155A
MILLENNIA REMOTE MONITOR, AGENTS

CAD SCALE	SHEET	DWG. NO.	REV.
.75 : 1	1 of 10	197C598	N

REF. ASSEMBLY INSTRUCTION AI072

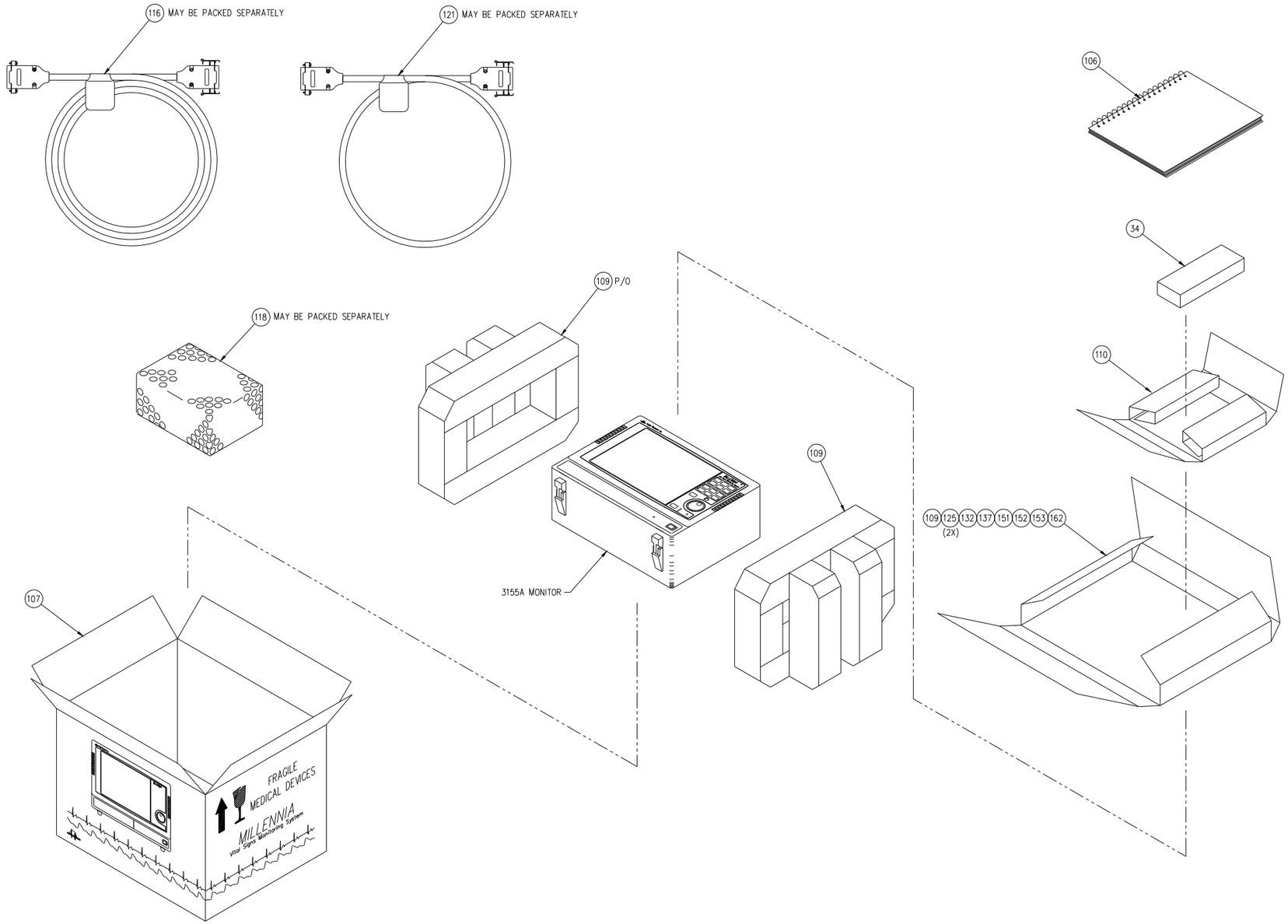

SCALE: .25 : 1

THIS DOCUMENT IS CONFIDENTIAL AND PROPRIETARY AND IS THE SOLE PROPERTY OF INVIVO RESEARCH INCORPORATED (IRI). IT IS NOT TO BE DISCLOSED TO ANY PARTY, REPRODUCED OR USED IN ANY OTHER MANNER WITHOUT WRITTEN CONSENT OF SAID COMPANY. INVIVO MAINTAINS THE RIGHT TO CHANGE SPECIFICATIONS AT ANY TIME WITHOUT PRIOR NOTICE.

UNLESS OTHERWISE SPECIFIED TOLERANCES ARE			
.XX = ±	DRAWN	KCO	11JAN00
.XXX = ±	DESIGNED	RLM	7JAN00
ANGLES = ±	CHECKED		
	APPROVED		

INCHES — THIRD ANGLE PROJECTION

DO NOT SCALE THIS DRAWING !!!

INVIVO RESEARCH, INC.
12601 RESEARCH PARKWAY., ORLANDO, FL 32826

TITLE
ASSY: 3155A
MILLENNIA REMOTE MONNITOR, AGENTS

CAD SCALE	SHEET	DWG. NO.	REV.
.75 : 1	10 of 10	197C598	N

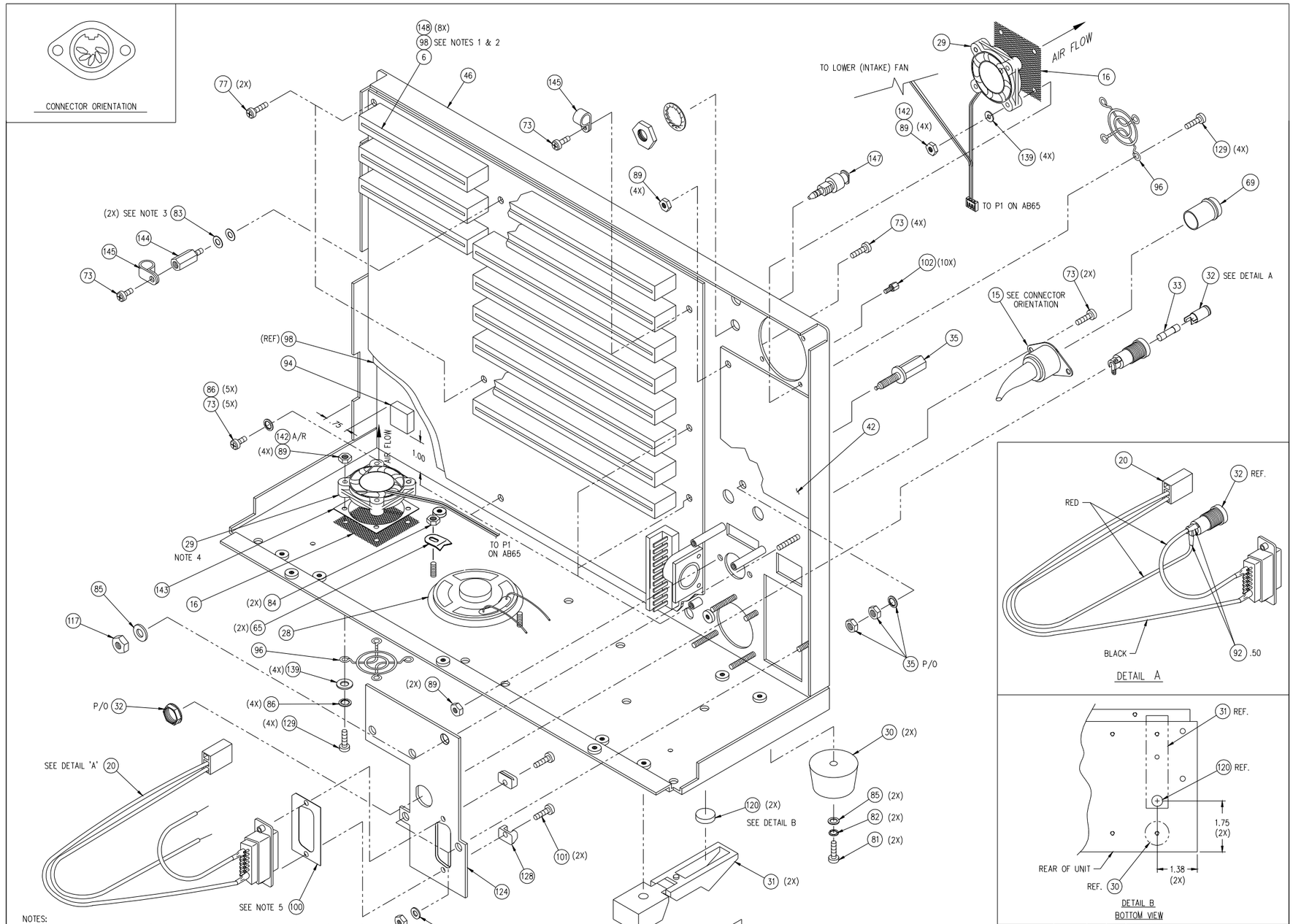

NOTES:

1. USING P/N M020 LOCTITE (ITEM 103), GLUE A P/N NW02 NYLON WASHER (ITEM 148) CENTERED OVER EACH HOLE IN P/N HM50AJ INSULATOR (ITEM 98). GLUE THE WASHERS TO THE SIDE OF THE INSULATOR THAT IS AGAINST THE MOTHERBOARD WHEN INSTALLED IN THE UNIT.
2. INSTALL P/N HM50AJ INSULATOR (ITEM 98) ON BACK SIDE OF BOARD.
3. INSTALL (2) P/N NW33 WASHERS (ITEM 83) UNDER P/N HS56 STANDOFF (ITEM 144).
4. NOTE DIRECTION OF AIR FLOW AND CABLING WHEN INSTALLING P/N AS141A DUAL FAN ASSEMBLY (ITEM 29).
5. CHAMFER CORNER .12 X 45° AT LOCATION SHOWN.

SCALE: 1 : 1

THIS DOCUMENT IS CONFIDENTIAL AND PROPRIETARY AND IS THE SOLE PROPERTY OF INVIVO RESEARCH INCORPORATED (IRI). IT IS NOT TO BE DISCLOSED TO ANY PARTY, REPRODUCED OR USED IN ANY OTHER MANNER WITHOUT WRITTEN CONSENT OF SAID COMPANY. INVIVO MAINTAINS THE RIGHT TO CHANGE SPECIFICATIONS AT ANY TIME WITHOUT PRIOR NOTICE.

UNLESS OTHERWISE SPECIFIED TOLERANCES ARE			
.XX = ±	DRAWN	KCO	11JAN00
.XXX = ±	DESIGNED	RLM	7JAN00
ANGLES = ±	CHECKED		
	APPROVED		

INCHES — THIRD ANGLE PROJECTION

DO NOT SCALE THIS DRAWING !!!

INVIVO RESEARCH, INC.
12601 RESEARCH PARKWAY, ORLANDO, FL 32826

TITLE: ASSY: 3155A MILLENNIA REMOTE MONITOR, AGENTS

CAD SCALE	SHEET	DWG. NO.	REV.
.75 : 1	2 of 10	197C598	N

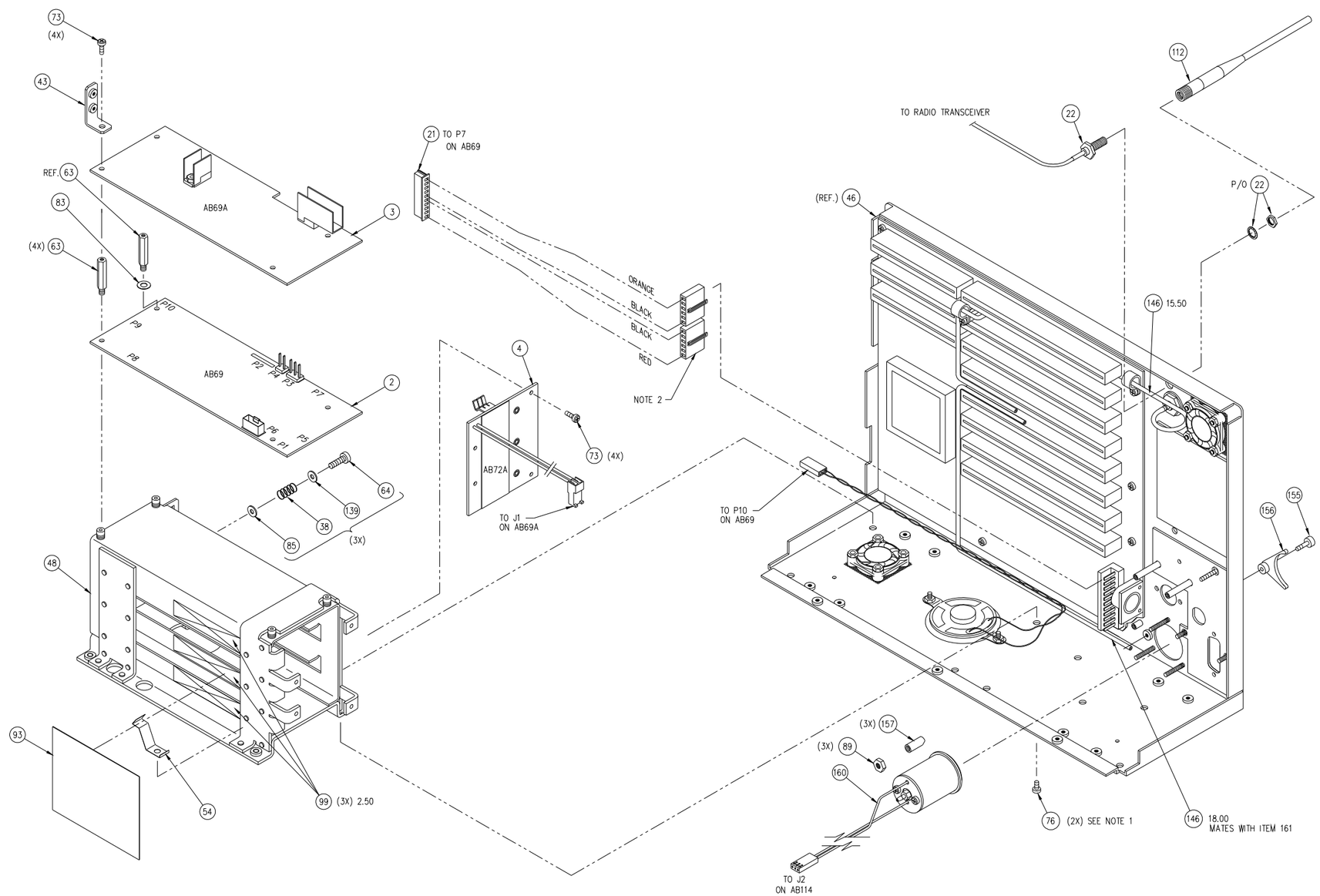

NOTE:

1. INSTALL ONLY THE TWO (2) REAR SCREWS IN THE BATTERY CAGE AT THIS LEVEL.
2. AFTER INSTALLING P/N AC269 CABLE (ITEM 21), APPLY RTV (ITEM 104) TO THE CABLE CONNECTORS AND HEADER ON P/N AB88 MOTHERBOARD, ENSURING THAT RTV CONTACTS BOTH THE CABLE CONNECTORS AND THE HEADER.

THIS DOCUMENT IS CONFIDENTIAL AND PROPRIETARY AND IS THE SOLE PROPERTY OF INVIVO RESEARCH INCORPORATED (IRI). IT IS NOT TO BE DISCLOSED TO ANY PARTY, REPRODUCED OR USED IN ANY OTHER MANNER WITHOUT WRITTEN CONSENT OF SAID COMPANY. INVIVO MAINTAINS THE RIGHT TO CHANGE SPECIFICATIONS AT ANY TIME WITHOUT PRIOR NOTICE.

UNLESS OTHERWISE SPECIFIED TOLERANCES ARE			
.XX = ±	DRAWN	KCO	11JAN00
.XXX = ±	DESIGNED	RLM	7JAN00
ANGLES = ±	CHECKED		
	APPROVED		

INCHES — THIRD ANGLE PROJECTION

DO NOT SCALE THIS DRAWING !!!

INVIVO RESEARCH, INC.
12601 RESEARCH PARKWAY., ORLANDO, FL 32826

TITLE
ASSY: 3155A
MILLENNIA REMOTE MONITOR, AGENTS

CAD SCALE	SHEET	DWG. NO.	REV.
.75 : 1	3 of 10	197C598	N

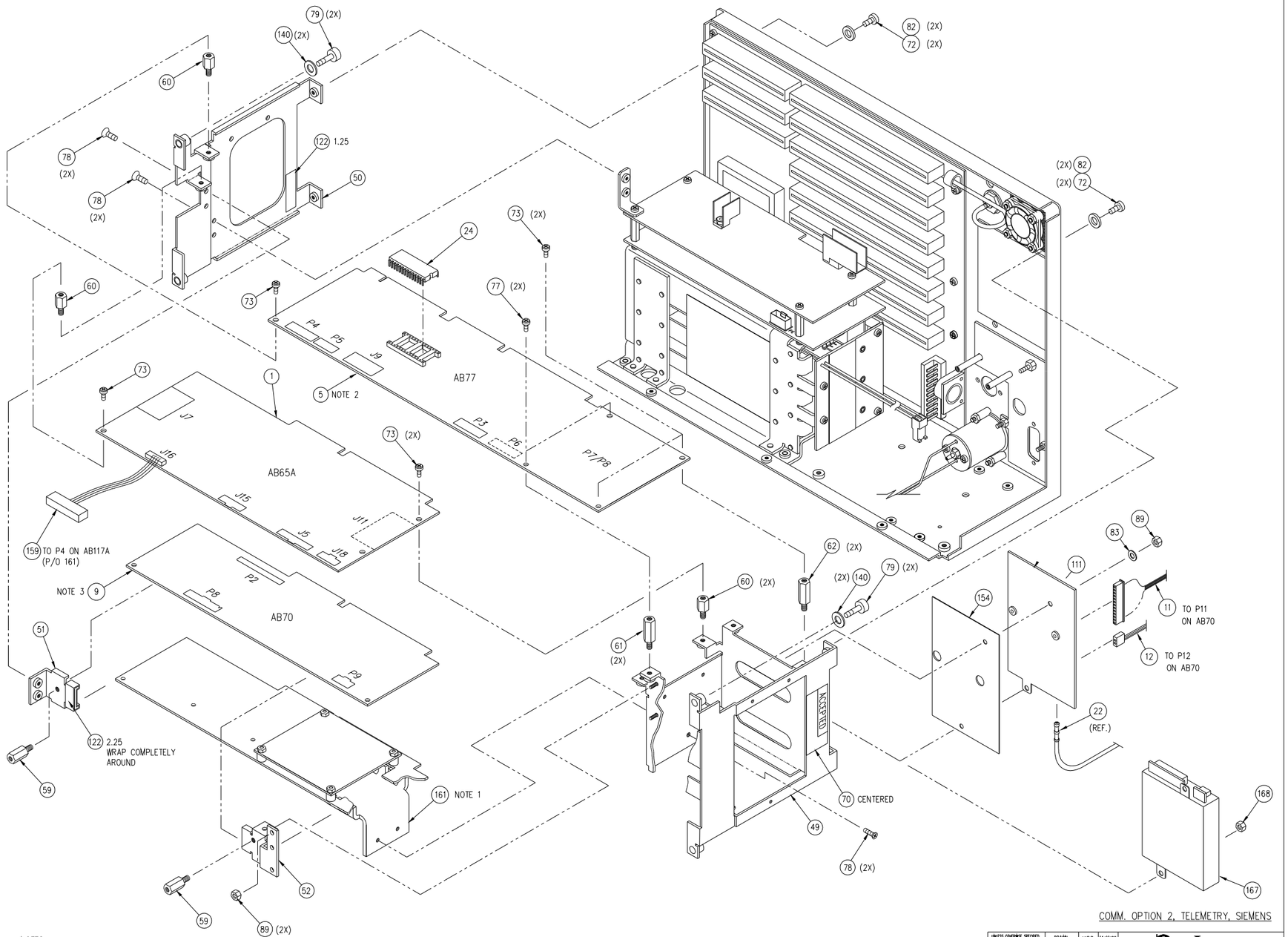

COMM. OPTION 2, TELEMETRY, SIEMENS

NOTES:

1. APPLY P/N M014 HEAT SINK COMPOUND (ITEM 149).
2. ON P/N AB77, JUMPER PINS 1 AND 2 ON JMP14 AND JMP15.
3. ON P/N AB70, REMOVE SHUNT AT P10-2,3 INSTALL SHUNT AT P10-1,2. REMOVE SHUNTS AT JMP8 AND JMP9.

THIS DOCUMENT IS CONFIDENTIAL AND PROPRIETARY AND IS THE SOLE PROPERTY OF INVIVO RESEARCH INCORPORATED (IRI). IT IS NOT TO BE DISCLOSED TO ANY PARTY, REPRODUCED OR USED IN ANY OTHER MANNER WITHOUT WRITTEN CONSENT OF SAID COMPANY. INVIVO MAINTAINS THE RIGHT TO CHANGE SPECIFICATIONS AT ANY TIME WITHOUT PRIOR NOTICE.

UNLESS OTHERWISE SPECIFIED TOLERANCES ARE			
.XX = ±	DRAWN	KCO	11JAN00
.XXX = ±	DESIGNED	RLM	7JAN00
ANGLES = ±	CHECKED		
	APPROVED		

INCHES — THIRD ANGLE PROJECTION

DO NOT SCALE THIS DRAWING !!!

INVIVO RESEARCH, INC.
12601 RESEARCH PARKWAY., ORLANDO, FL 32826

TITLE
ASSY: 3155A
MILLENNIA REMOTE MONITOR, AGENTS

CAD SCALE	SHEET	DWG. NO.	REV.
.75 : 1	4 of 10	197C598	N

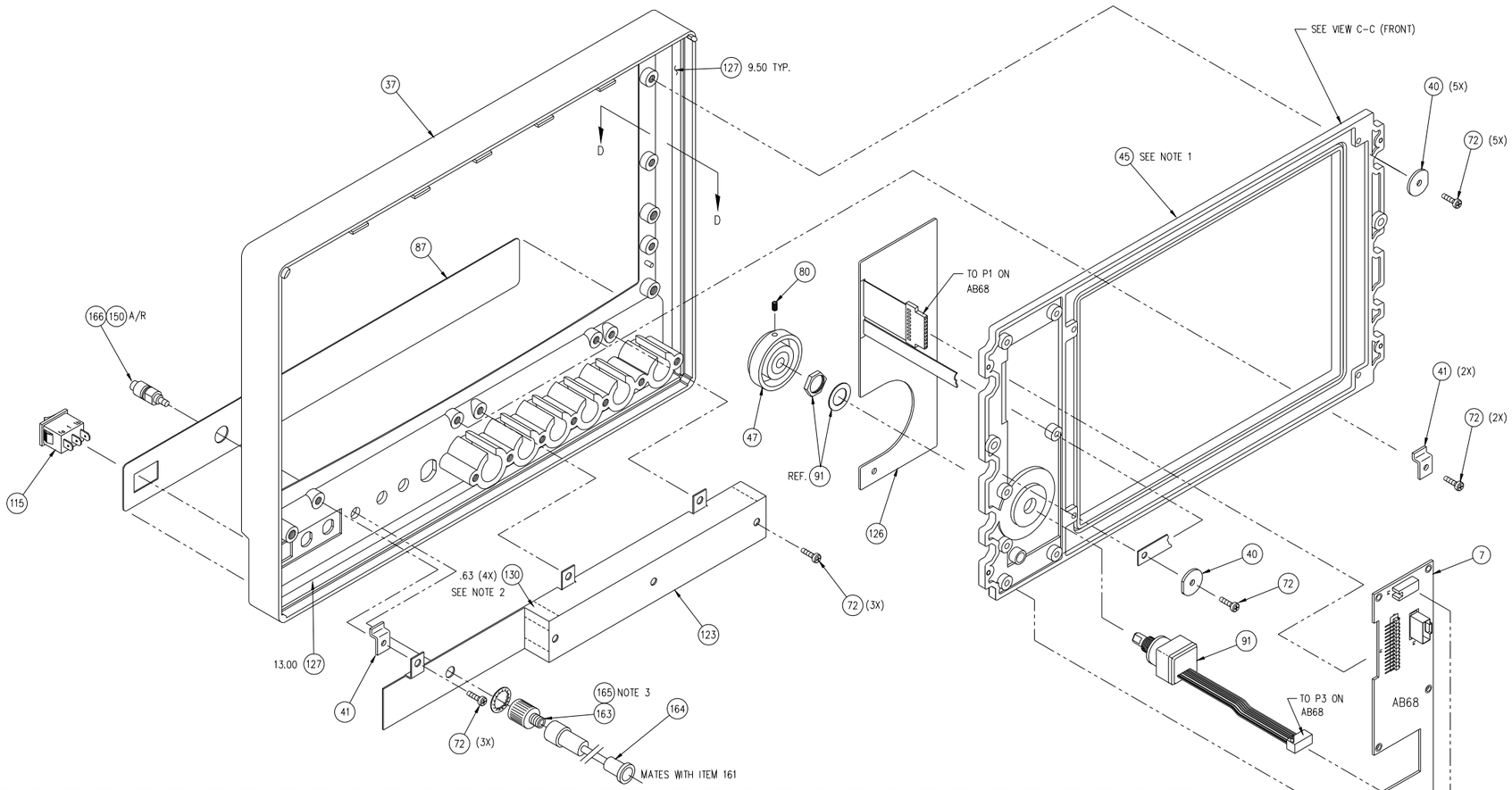

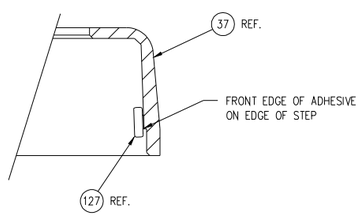

SECTION D-D
TYPICAL
CAD SCALE: 2:1

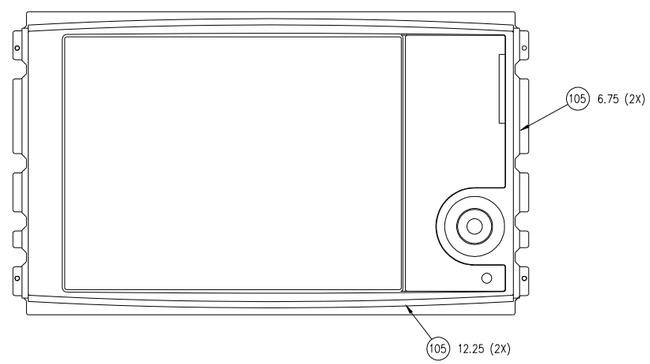

VIEW C-C
FRONT

NOTES:

1. APPLY ONE DROP OF P/N M020, ADHESIVE (ITEM 103) ALONG TOP MATING SEAM IN CENTER OF P/N HM50A2, FRONT PANEL MOLDING (ITEM 37) AND MATE WITH P/N HM50B1, DISPLAY INSERT MOLDING (ITEM 45). HOLD UNTIL SET. THEN APPLY A 1/8" BEAD OF P/N M008A, CLEAR RTV ADHESIVE/SEALANT (ITEM 104) ALONG THE TOP MATING SEAMS BETWEEN THE (3) CENTERMOST RIBS ON FRONT PANEL MOLDING.
2. APPLY P/N M092, COPPER TAPE (ITEM 130) TO THE INSIDE OF P/N HM50BDA, CONNECTOR COVER (ITEM 123) AT EACH CORNER.
3. TORQUE P/N HP87A, LUER LOCK (ITEM 165) TO 25 IN-LB.

THIS DOCUMENT IS CONFIDENTIAL AND PROPRIETARY AND IS THE SOLE PROPERTY OF INVIVO RESEARCH INCORPORATED (IRI). IT IS NOT TO BE DISCLOSED TO ANY PARTY, REPRODUCED OR USED IN ANY OTHER MANNER WITHOUT WRITTEN CONSENT OF SAID COMPANY. INVIVO MAINTAINS THE RIGHT TO CHANGE SPECIFICATIONS AT ANY TIME WITHOUT PRIOR NOTICE.

UNLESS OTHERWISE SPECIFIED TOLERANCES ARE			
.XX = ±	DRAWN	KCO	11JAN00
.XXX = ±	DESIGNED	RLM	7JAN00
ANGLES = ±	CHECKED		
	APPROVED		

INCHES — THIRD ANGLE PROJECTION

DO NOT SCALE THIS DRAWING !!!

INVIVO RESEARCH, INC.
12601 RESEARCH PARKWAY., ORLANDO, FL 32826

TITLE
ASSY: 3155A
MILLENNIA REMOTE MONITOR, AGENTS

CAD SCALE	SHEET	DWG. NO.	REV.
.75 : 1	5 of 10	197C598	N

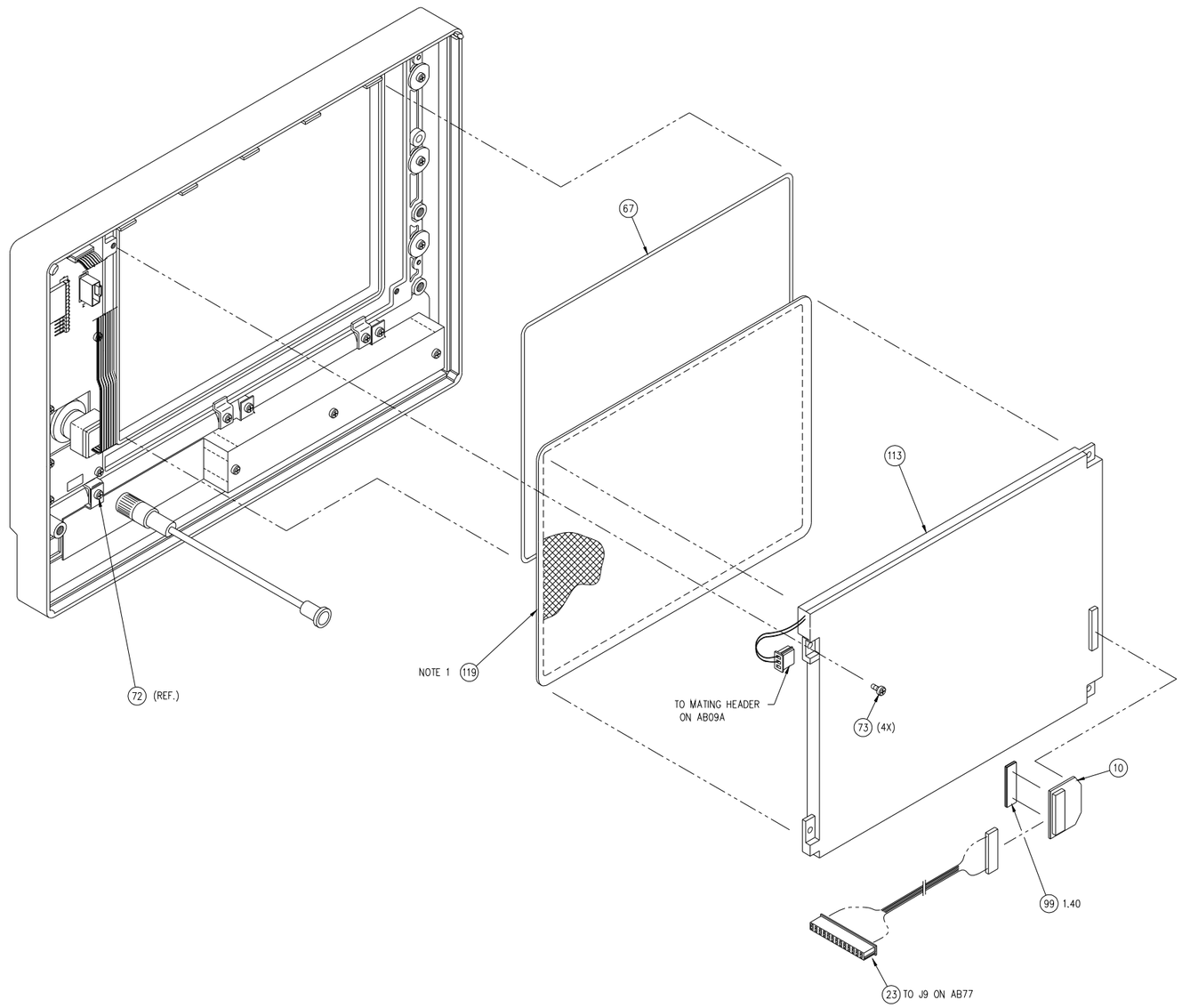

NOTE:

1. RECESSED EDGE TO BE PLACED AGAINST P/N H122 GASKET (ITEM 67).

THIS DOCUMENT IS CONFIDENTIAL AND PROPRIETARY AND IS THE SOLE PROPERTY OF INVIVO RESEARCH INCORPORATED (IRI). IT IS NOT TO BE DISCLOSED TO ANY PARTY, REPRODUCED OR USED IN ANY OTHER MANNER WITHOUT WRITTEN CONSENT OF SAID COMPANY. INVIVO MAINTAINS THE RIGHT TO CHANGE SPECIFICATIONS AT ANY TIME WITHOUT PRIOR NOTICE.

UNLESS OTHERWISE SPECIFIED TOLERANCES ARE			
.XX = ±	DRAWN	KCO	11JAN00
.XXX = ±	DESIGNED	RLM	7JAN00
ANGLES = ±	CHECKED		
	APPROVED		

INCHES — THIRD ANGLE PROJECTION

DO NOT SCALE THIS DRAWING !!!

INVIVO RESEARCH, INC.
12601 RESEARCH PARKWAY., ORLANDO, FL 32826

TITLE
ASSY: 3155A
MILLENNIA REMOTE MONITOR, AGENTS

CAD SCALE	SHEET	DWG. NO.	REV.
.75 : 1	6 OF 10	197C598	N

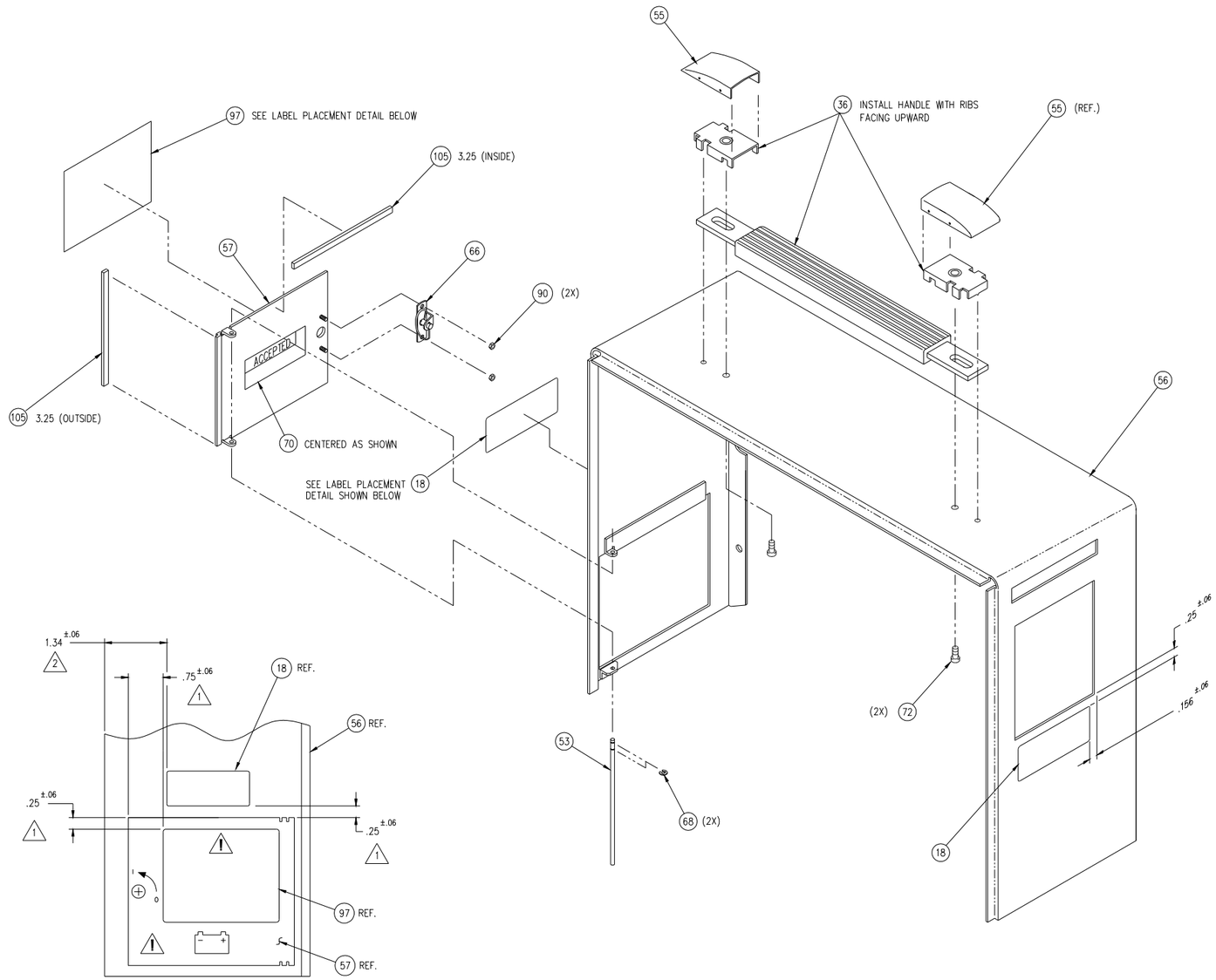

LABEL PLACEMENT DETAIL

1. DIMENSIONS ARE FROM EDGES OF P/N HM50W BATTERY DOOR (ITEM 57).
2. DIMENSION IS FROM EDGE OF P/N HM50T COVER (ITEM 56).

THIS DOCUMENT IS CONFIDENTIAL AND PROPRIETARY AND IS THE SOLE PROPERTY OF INVIVO RESEARCH INCORPORATED (IRI). IT IS NOT TO BE DISCLOSED TO ANY PARTY, REPRODUCED OR USED IN ANY OTHER MANNER WITHOUT WRITTEN CONSENT OF SAID COMPANY. INVIVO MAINTAINS THE RIGHT TO CHANGE SPECIFICATIONS AT ANY TIME WITHOUT PRIOR NOTICE.

UNLESS OTHERWISE SPECIFIED TOLERANCES ARE			
.XX = ±	DRAWN	KCO	11JAN00
.XXX = ±	DESIGNED	RLM	7JAN00
ANGLES = ±	CHECKED		
	APPROVED		

INCHES — THIRD ANGLE PROJECTION

DO NOT SCALE THIS DRAWING !!!

INVIVO RESEARCH, INC.
12601 RESEARCH PARKWAY., ORLANDO, FL 32826

TITLE
ASSY: 3155A
MILLENNIA REMOTE MONITOR, AGENTS

CAD SCALE	SHEET	DWG. NO.	REV.
.75 : 1	7 of 10	197C598	N

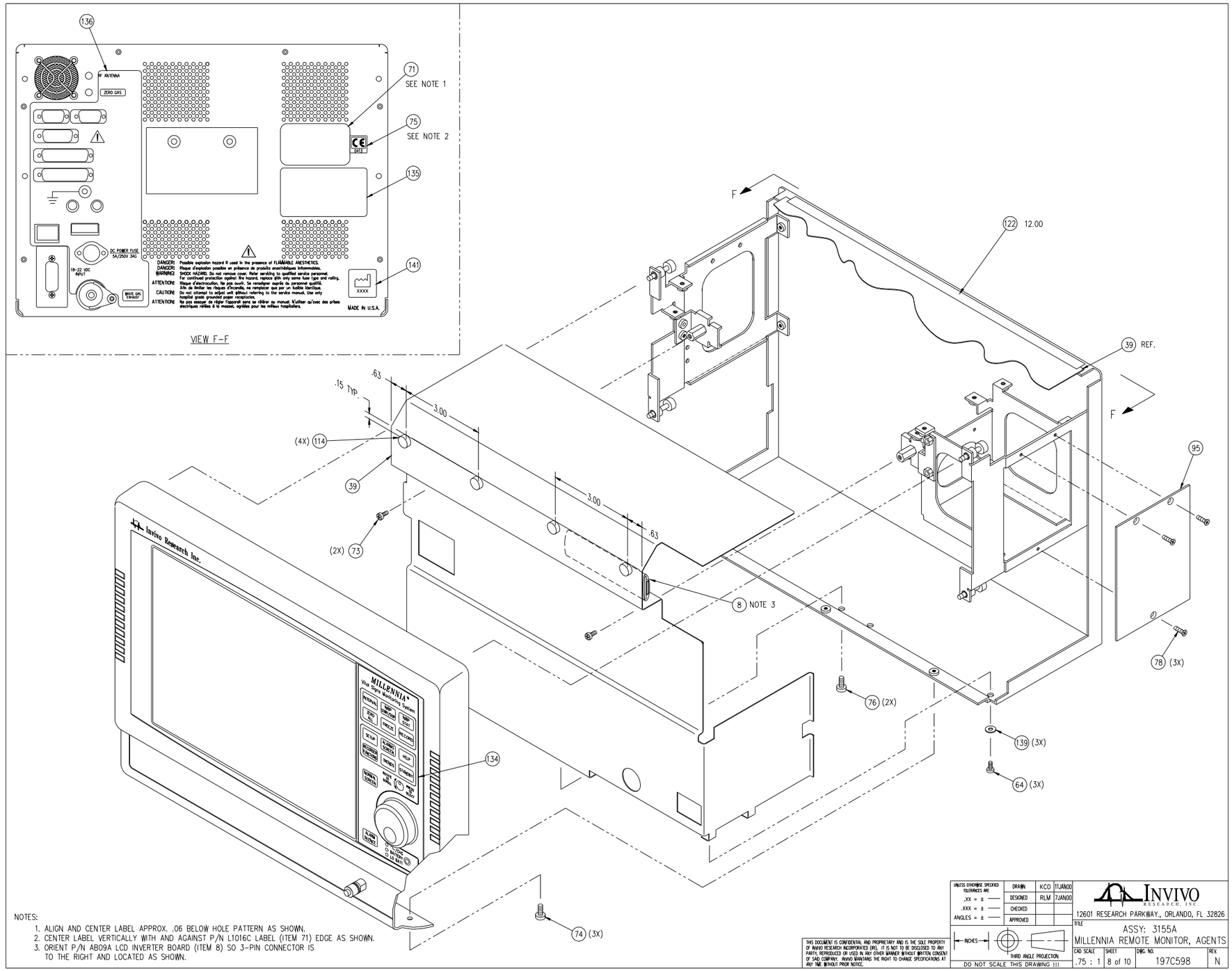

NOTES:

1. ALIGN AND CENTER LABEL APPROX. .06 BELOW HOLE PATTERN AS SHOWN.
2. CENTER LABEL VERTICALLY WITH AND AGAINST P/N L1016C LABEL (ITEM 71) EDGE AS SHOWN.
3. ORIENT P/N AB09A LCD INVERTER BOARD (ITEM 8) SO 3-PIN CONNECTOR IS TO THE RIGHT AND LOCATED AS SHOWN.

THIS DOCUMENT IS CONFIDENTIAL AND PROPRIETARY AND IS THE SOLE PROPERTY OF INVIVO RESEARCH INCORPORATED (IRI). IT IS NOT TO BE DISCLOSED TO ANY PARTY, REPRODUCED OR USED IN ANY OTHER MANNER WITHOUT WRITTEN CONSENT OF SAID COMPANY. INVIVO MAINTAINS THE RIGHT TO CHANGE SPECIFICATIONS AT ANY TIME WITHOUT PRIOR NOTICE.

UNLESS OTHERWISE SPECIFIED TOLERANCES ARE			
.XX = ±	DRAWN	KCO	11JAN00
.XXX = ±	DESIGNED	RLM	7JAN00
ANGLES = ±	CHECKED		
	APPROVED		

INCHES — THIRD ANGLE PROJECTION

DO NOT SCALE THIS DRAWING !!!

INVIVO RESEARCH, INC.
12601 RESEARCH PARKWAY., ORLANDO, FL 32826

TITLE: ASSY: 3155A
MILLENNIA REMOTE MONITOR, AGENTS

CAD SCALE	SHEET	DWG. NO.	REV.
.75 : 1	8 of 10	197C598	N

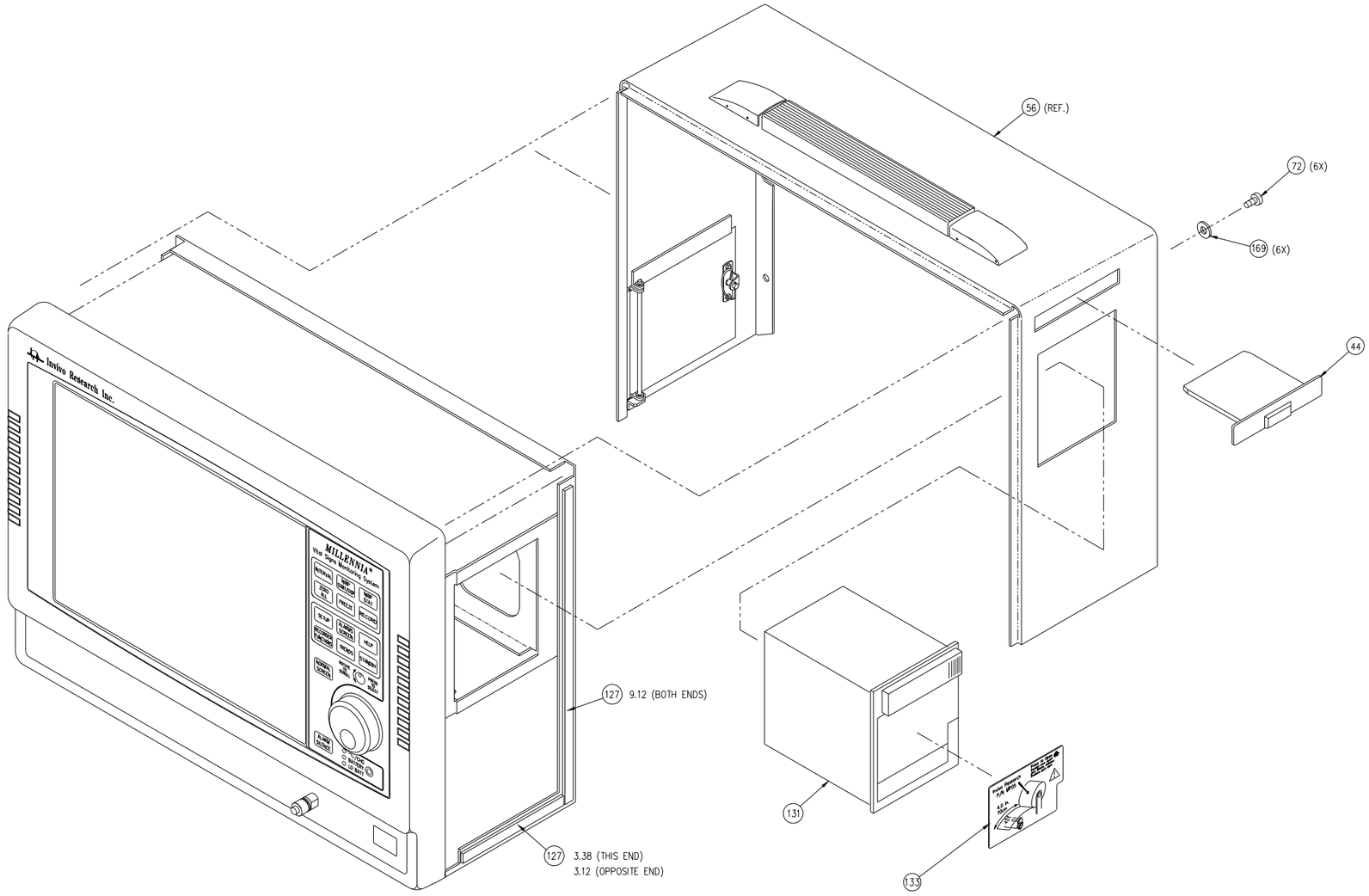

UNLESS OTHERWISE SPECIFIED TOLERANCES ARE	DRAWN	KCO	11JAN00
.XX = ±	DESIGNED	RLM	7JAN00
.XXX = ±	CHECKED		
ANGLES = ±	APPROVED		

INCHES — THIRD ANGLE PROJECTION

DO NOT SCALE THIS DRAWING !!!

THIS DOCUMENT IS CONFIDENTIAL AND PROPRIETARY AND IS THE SOLE PROPERTY OF INVIVO RESEARCH INCORPORATED (IRI). IT IS NOT TO BE DISCLOSED TO ANY PARTY, REPRODUCED OR USED IN ANY OTHER MANNER WITHOUT WRITTEN CONSENT OF SAID COMPANY. INVIVO MAINTAINS THE RIGHT TO CHANGE SPECIFICATIONS AT ANY TIME WITHOUT PRIOR NOTICE.

INVIVO RESEARCH INC.
12601 RESEARCH PARKWAY., ORLANDO, FL 32826

TITLE: ASSY: 3155A
MILLENNIA REMOTE MONITOR, AGENTS

CAD SCALE	SHEET	DWG. NO.	REV.
.75 : 1	9 of 10	197C598	N

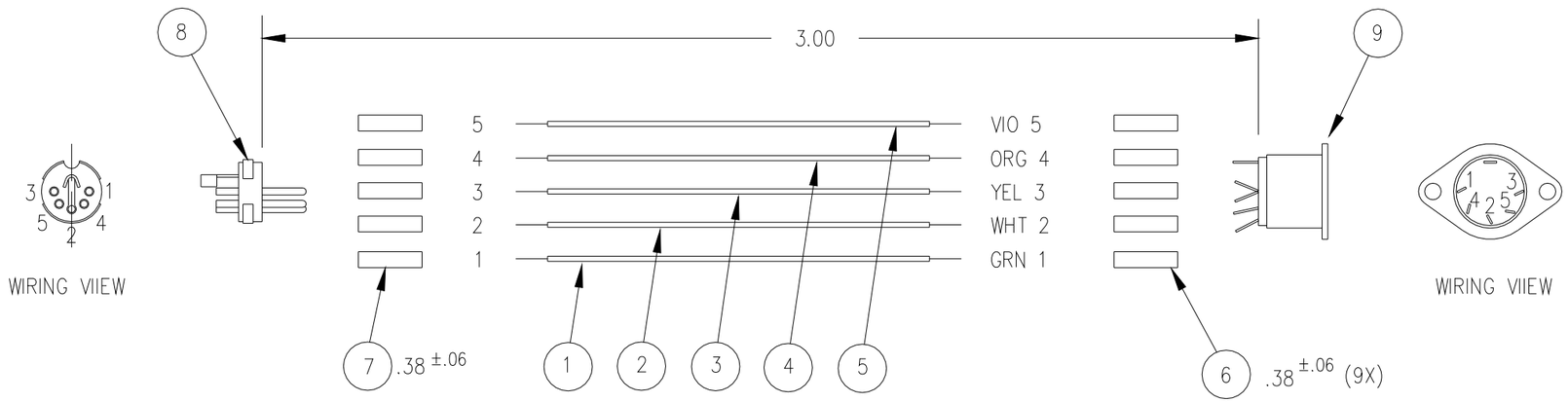

NOTES

1. DISASSEMBLE P/N PA299 PLUG CONNECTOR (ITEM 8) SALVAGING THE INSERT W/PINS, DISCARDING BACKSHELL AND STRAIN RELIEF
2. STRIP AND TIN WIRES .125 ON ONE END, STRIP AND TIN .250 ON THE OTHER END.
3. J-HOOK .250 WIRE ENDS AND SOLDER TO P/N PA297 RECEPTACLE TERMINALS (ITEM 9) ENSURING CORRECT WIRE-TO-PIN NUMBER MATING AS INDICATED
4. SLIDE TWO .38$^{\pm.06}$ LENGTHS OF P/N WT04 HEAT SHRINK (ITEM 6) ONTO EACH WIRE, EXCEPT USE P/N WT01 (ITEM 7) ON LEFT END OF WHITE WIRE
5. SOLDER WIRES TO P/N PA299 PLUG INSERT (ITEM 8)
6. ROUTE TO INSPECTION
7. SHRINK HEAT SHRINK OVER RECEPTACLE AND PLUG TERMINALS
8. ROUTE TO INSPECTION

ITEM / REF. DES.	PART NO.	QTY.	DESCRIPTION
9	PA297	1	CONN, 5P-180, RECEPT, CIRCULAR DIN
8	PA299	1	CONN, 5P-180, PLUG, CIRCULAR DIN
7	WT01	.38	HEAT SHRINK, 3/4" ID BLACK
6	WT04	3.75	HEAT SHRINK, 3/32" ID BLACK
5	W048	3.25	WIRE, 26 GAGE 19 X 38 VIOLET UL-1429
4	W036	3.25	WIRE, 26 GAGE 19 X 38 ORANGE UL-1429
3	W037	3.25	WIRE, 26 GAGE 19 X 38 YELLOW UL-1429
2	W030	3.25	WIRE, 26 GAGE 19 X 38 WHITE UL-1429
1	W039	3.25	WIRE, 26 GAGE 19 X 38 GREEN UL-1429

REV.	DESCRIPTION	BY	DATE
C	PER ECN #5514	SR	4FEB97
B	PER ECN #5398	CHY	21NOV96
A	RELEASE, ECN #4571	SR	10/13/95

THIS DOCUMENT IS CONFIDENTIAL AND PROPRIETARY AND IS THE SOLE PROPERTY OF INVIVO RESEARCH INCORPORATED (IRI). IT IS NOT TO BE DISCLOSED TO ANY PARTY, REPRODUCED OR USED IN ANY OTHER MANNER WITHOUT WRITTEN CONSENT OF SAID COMPANY. INVIVO MAINTAINS THE RIGHT TO CHANGE SPECIFICATIONS AT ANY TIME WITHOUT PRIOR NOTICE.

UNLESS OTHERWISE SPECIFIED TOLERANCES ARE
.XX = ± .25
.XXX = ± .015
ANGLES = ± —

DRAWN	SR	10/4/95
DESIGNED	RS	9/28/95
CHECKED		
APPROVED		

INCHES

THIRD ANGLE PROJECTION

DO NOT SCALE THIS DRAWING !!!

Invivo Research Inc.
PRECISION BIOMEDICAL INSTRUMENTS
12601 RESEARCH PARKWAY., ORLANDO, FL 32826

TITLE
CABLE ASSEMBLY: AC266
CABLE, KEYBOARD, 3500

CAD SCALE	SHEET	DWG. NO.	REV.
NONE	1 OF 1	C59B195	C

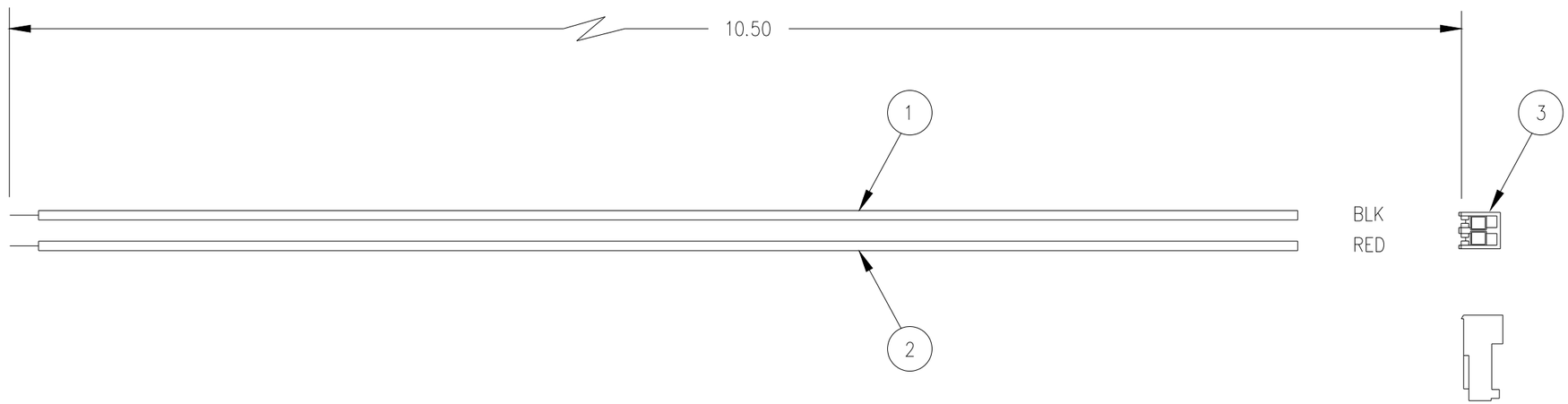

NOTES

1. STRIP AND TIN .250, ONE END OF EACH WIRE (ITEMS 1 & 2).
2. CRIMP WIRES INTO HOUSING, POSITIONED AS SHOWN.
3. INSPECT BOTH CRIMPS, ENSURING THAT THE WIRE INSULATION IS CENTRALLY LOCATED IN THE TERMINAL AND THAT BOTH SIDES OF THE TERMINAL ARE VISIBLE ABOVE THE WIRE INSULATION. FURTHER COMPARE THE CRIMPS TO SEE THAT THEY APPEAR TO BE THE SAME.
4. ROUTE TO INSPECTION.

ITEM / REF. DES.	PART NO.	QTY.	DESCRIPTION
3	PA253A	1	HOUSING, FRICTION LOCK, SR, 2 PIN (.156)
2	W022	11.00	WIRE, 18 GAGE 19 X 30 RED UL-1430
1	W017	11.00	XWIRE, 18 GAGE 19 X 30 BLACK UL-1430

REV.	DESCRIPTION	BY	DATE
D	PER ECN #8894	CHY	21AUG02
C	PER ECN #5654	CHY	9APR97
B	PER ECN #5320	SR	26NOV96
A	RELEASE, ECN #4571	SR	10/13/95

THIS DOCUMENT IS CONFIDENTIAL AND PROPRIETARY AND IS THE SOLE PROPERTY OF INVIVO RESEARCH INCORPORATED (IRI). IT IS NOT TO BE DISCLOSED TO ANY PARTY, REPRODUCED OR USED IN ANY OTHER MANNER WITHOUT WRITTEN CONSENT OF SAID COMPANY. INVIVO RESEARCH INC. MAINTAINS THE RIGHT TO CHANGE SPECIFICATIONS AT ANY TIME WITHOUT PRIOR NOTICE.

UNLESS OTHERWISE SPECIFIED TOLERANCES ARE
.XX = ± .25
.XXX = ± .015
ANGLES = ± —

DRAWN	SR	10/5/95
DESIGNED	RS	9/28/95
CHECKED		
APPROVED		

INCHES

THIRD ANGLE PROJECTION

DO NOT SCALE THIS DRAWING !!!

INVIVO RESEARCH, INC.
12601 RESEARCH PARKWAY., ORLANDO, FL 32826

TITLE: CABLE ASSEMBLY: AC267
CABLE, BATTERY, 3500

CAD SCALE:	SHEET:	DWG. NO.:	REV.:
NONE	1 OF 1	C59B196	D

ECN8242

LF19 REV. B

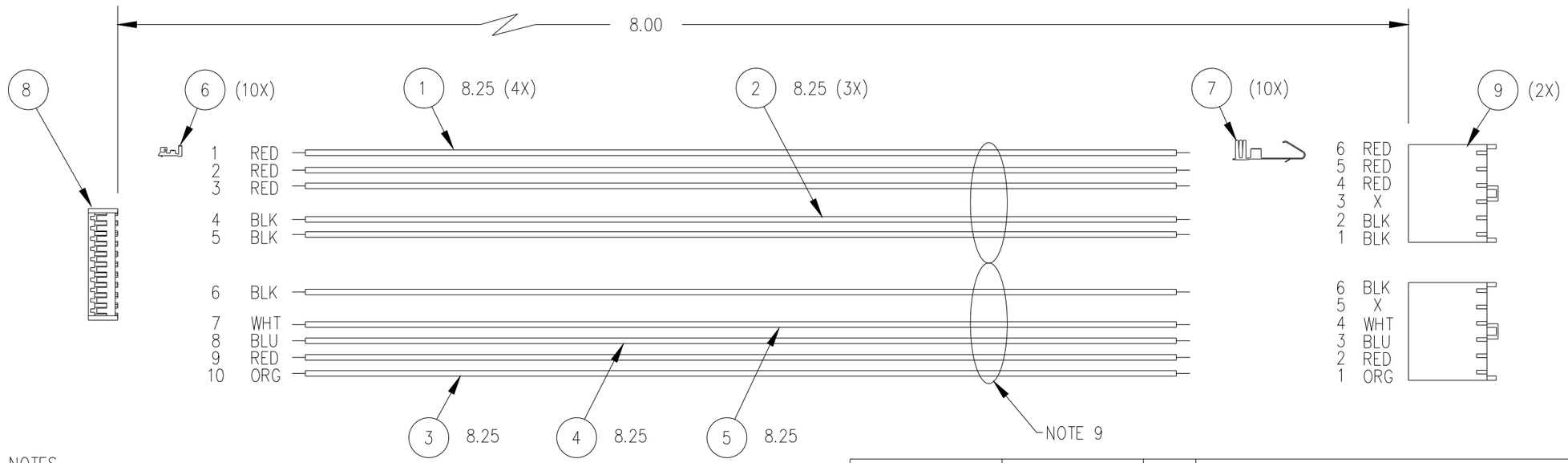

NOTES

1. CUT WIRES (ITEMS 1–5) TO 8.25 LENGTH.
2. STRIP WIRES .078 ON ONE END AND .125 ON THE OPPOSITE END.
3. CRIMP TERMINALS (ITEM 6) ONTO .078 STRIPPED WIRE ENDS.
4. CRIMP TERMINALS (ITEM 7) ONTO .125 STRIPPED WIRE ENDS.
5. ROUTE TO INSPECTION.
6. INSERT TERMINATED WIRES INTO HOUSING (ITEM 8) ENSURING CORRECT WIRE–TO–PIN NUMBER MATING AS INDICATED.
7. INSERT TERMINATED WIRES INTO HOUSING (ITEM 9) ENSURING WIRES ARE POSITIONED IN HOUSINGS AS SHOWN.
8. ROUTE TO INSPECTION.
9. TWIST CABLE APPROXIMATELY TWO TURNS PER INCH.

ITEM / REF. DES.	PART NO.	QTY.	DESCRIPTION
9	PA295A	2	CONN, 6P, SR, RECPT, .156 CTRS, PWR RECPT.
8	PA272A	1	CONN, 10P, SR, SOCKET, .098 CTRS.
7	PT37	10	TERMINAL CRIMP, POSTLATCH, 18–22AWG
6	PT33	10	TERMINAL, 20–32 AWG, JST
5	W032	8.50	WIRE, 22 GAGE 19 X 34 WHITE UL–1429
4	W010	8.50	WIRE, 22 GAGE 19 X 34 BLUE UL–1429
3	W006	8.50	WIRE, 22 GAGE 19 X 34 ORANGE UL–1429
2	W005	25.50	WIRE, 22 GAGE 19 X 34 BLACK UL–1429
1	W009	34.00	WIRE, 22 GAGE 19 X 34 RED UL–1429

REV.	DESCRIPTION	BY	DATE
B	PER ECN NO. 4741	CHY	1/15/96
A	RELEASE, ECN #4571	SR	10/13/95

THIS DOCUMENT IS CONFIDENTIAL AND PROPRIETARY AND IS THE SOLE PROPERTY OF INVIVO RESEARCH INCORPORATED (IRI). IT IS NOT TO BE DISCLOSED TO ANY PARTY, REPRODUCED OR USED IN ANY OTHER MANNER WITHOUT WRITTEN CONSENT OF SAID COMPANY. INVIVO MAINTAINS THE RIGHT TO CHANGE SPECIFICATIONS AT ANY TIME WITHOUT PRIOR NOTICE.

UNLESS OTHERWISE SPECIFIED TOLERANCES ARE
.XX = ± .25
.XXX = ± .015
ANGLES = ± —

DRAWN	SR	10/9/95
DESIGNED	RS	9/28/95
CHECKED		
APPROVED		

INCHES — THIRD ANGLE PROJECTION

DO NOT SCALE THIS DRAWING !!!

Invivo Research Inc.
PRECISION BIOMEDICAL INSTRUMENTS
12601 RESEARCH PARKWAY., ORLANDO, FL 32826

TITLE
CABLE ASSEMBLY: AC269
CABLE, MOTHER BOARD POWER, 3500

CAD SCALE	SHEET	DWG. NO.	REV.
NONE	1 OF 1	C59B198	B

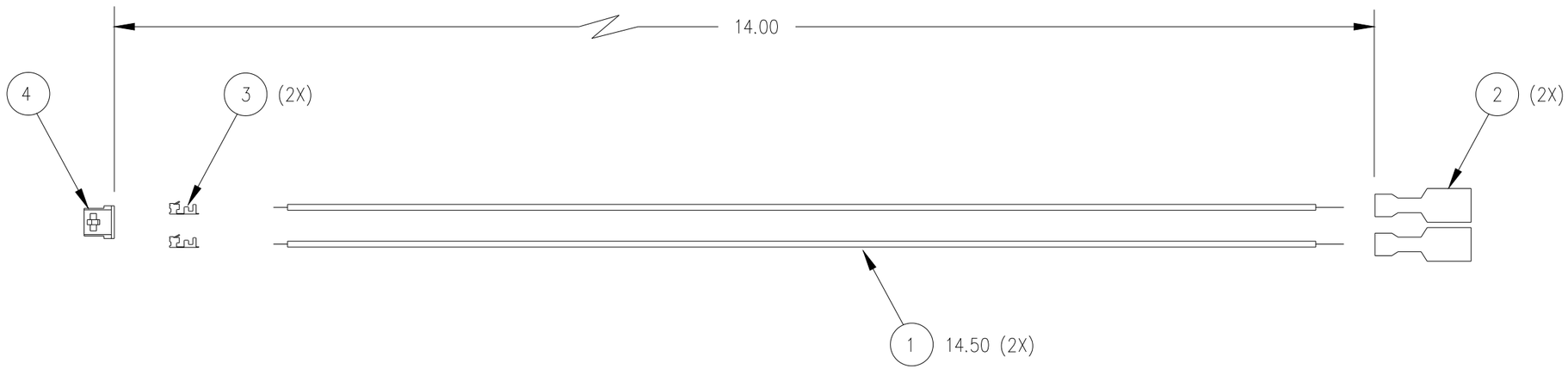

NOTES

1. CUT WIRE (ITEM 1) TO 14.50 LENGTH.
2. STRIP WIRES .078 ON ONE END AND .250 ON THE OPPOSITE END.
3. CRIMP TERMINALS (ITEM 2) ONTO .250 STRIPPED ENDS.
4. CRIMP TERMINALS (ITEM 3) ONTO OPPOSITE END.
5. ROUTE TO INSPECTION.
6. INSERT TERMINATED WIRES INTO HOUSING (ITEM 4).
7. TWIST WIRES APPROXIMATELY TWO TURNS PER INCH.

ITEM / REF. DES.	PART NO.	QTY.	DESCRIPTION
4	PA195	1	CONN, 2P, SR, HSG, ST, .098 CTRS.
3	PT28	2	TERMINAL, RECPT, LOOSE
2	PT04	2	TERMINAL, RECPT., 2-520193-2
1	W008	29.00	WIRE, 22 GAGE 19 X 34 VIOLET UL-1429

REV.	DESCRIPTION	BY	DATE
A	RELEASE, ECN #4571	SR	10/13/95

THIS DOCUMENT IS CONFIDENTIAL AND PROPRIETARY AND SI TH SOLE PROPERTY OF INVIVO RESEARCH INCORPORTATED (IRI). iT IS NOT TO BE DISCLOSED TO ANY PARTY, REPRODUCED OR USED IN ANY OTHER MANNER WITHOUT WRITTEN CONSENT OF SAID COMPANY. INVIVO MAINTAINS THE RIGHT TO CHANGE SPECIFICATIONS AT ANY TIME WITHOUT PRIOR NOTICE.

UNLESS OTHERWISE SPECIFIED TOLERANCES ARE
.XX = ± .25
.XXX = ± .015
ANGLES = ± —

DRAWN	SR	10/5/95
DESIGNED	RS	9/28/95
CHECKED		
APPROVED		

INCHES

THIRD ANGLE PROJECTION

DO NOT SCALE THIS DRAWING !!!

Invivo Research Inc.
PRECISION BIOMEDICAL INSTRUMENTS
12601 RESEARCH PARKWAY., ORLANDO, FL 32826

TITLE
CABLE ASSEMBLY: AC270
CABLE, FRONT SWITCH POWER, 3500

CAD SCALE	SHEET	DWG. NO.	REV.
NONE	1 OF 1	C59B200	A

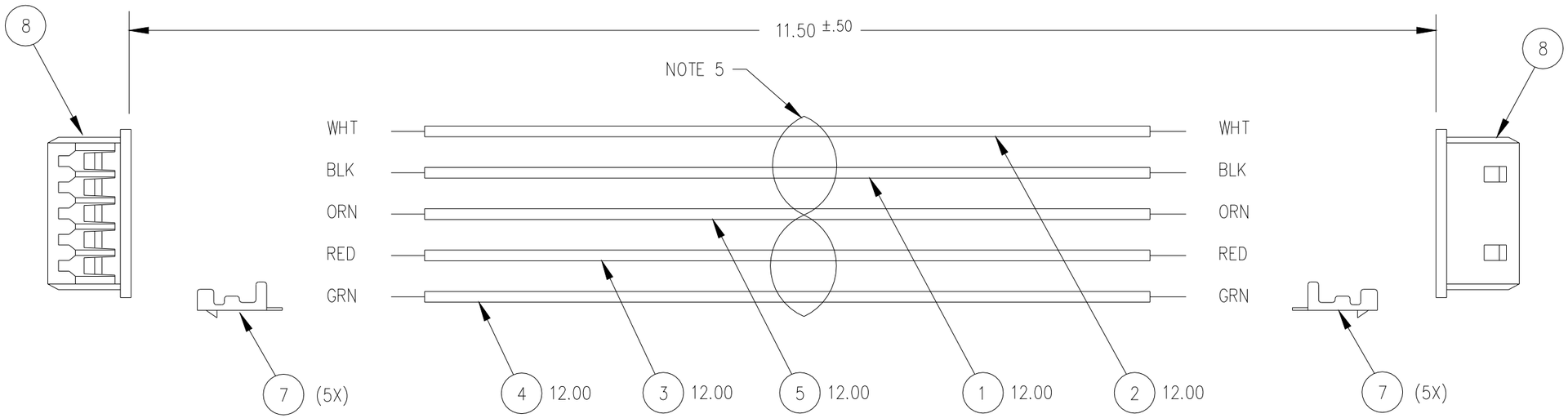

NOTES:

1. CUT W069, W072, W073, W074 AND W077 WIRES (ITEMS 1–5) 12.00 LONG
2. STRIP WIRES ON BOTH ENDS PER AI046 FOR PT35 CONTACTS
3. CRIMP PT35 CONTACTS (ITEM 7) ONTO WIRE ENDS
4. ROUTE TO INSPECTION
5. TWIST WIRES APPROXIMATELY 1–2 TURNS PER INCH, THEN INSERT THRU WT01 HEAT SHRINK TUBING (ITEM 6)
6. INSERT CONTACTS INTO PA287A HOUSING (ITEM 8), BOTH ENDS AS SHOWN
7. CENTER AND SHRINK SLEEVING IN PLACE
8. ROUTE TO INSPECTION

ITEM / REF. DES.	PART NO.	QTY.	DESCRIPTION
8	PA287A	2	CONN, 5P, SR. HSG, .049 CTRS.
7	PT35	10	CONTACT, CRIMP SOCKET, 26–32 AWG.
6	WT01	11.00	HEAT SHRINK, 1/8 I.D., BLACK
5	W077	12.00	WIRE, 28 GA., 7/36, ORN., UL–1429
4	W074	12.00	WIRE, 28 GA., 7/36, GRN., UL–1429
3	W073	12.00	WIRE, 28 GA., 7/36, RED, UL–1429
2	W072	12.00	WIRE, 28 GA., 7/36, WHT., UL–1429
1	W069	12.00	WIRE, 28 GA., 7/36, BLK., UL–1429

REV.	DESCRIPTION	BY	DATE
E	PER ECN #6131	CHY	10NOV97
D	PER ECN #5852	CHY	1AUG97
C	PER ECN #5733	CHY	17JUN97
B	PER ECN #4964	CHY	5/28/96
A	RELEASE, ECN #4571	SR	10/13/95

THIS DOCUMENT IS CONFIDENTIAL AND PROPRIETARY AND IS THE SOLE PROPERTY OF INVIVO RESEARCH INCORPORATED (IRI). IT IS NOT TO BE DISCLOSED TO ANY PARTY, REPRODUCED OR USED IN ANY OTHER MANNER WITHOUT WRITTEN CONSENT OF SAID COMPANY. INVIVO RESEARCH INC. MAINTAINS THE RIGHT TO CHANGE SPECIFICATIONS AT ANY TIME WITHOUT PRIOR NOTICE.

UNLESS OTHERWISE SPECIFIED TOLERANCES ARE

.XX = ± .25
.XXX = ± .015
ANGLES = ± —

DRAWN	SR	10/5/95
DESIGNED	RS	9/28/95
CHECKED		
APPROVED		

INCHES

THIRD ANGLE PROJECTION

DO NOT SCALE THIS DRAWING !!!

Invivo Research Inc.
PRECISION BIOMEDICAL INSTRUMENTS
Subsidiary of Invivo Corporation
12601 RESEARCH PARKWAY., ORLANDO, FL 32826

TITLE: ASSEMBLY: AC261
CABLE, XENTEK INVERTER/VGA, 3500

CAD SCALE:	SHEET:	DWG. NO.:	REV.:
NONE	1 OF 1	C59B202	E

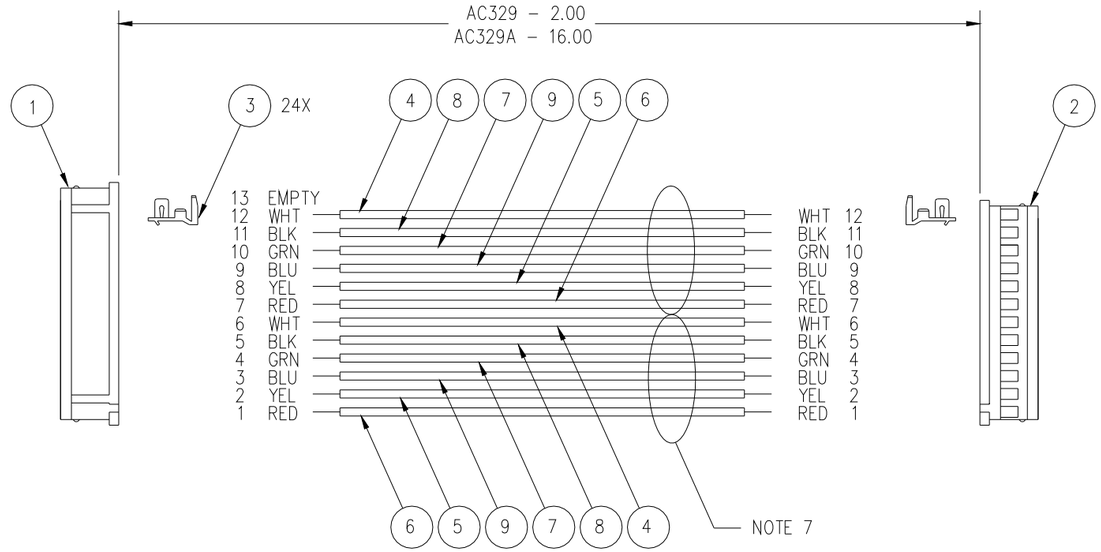

WIRE QUANTITY CHART		
	AC329	AC329A
PART NO.	QTY.	QTY.
W049	4.50	32.50
W047	4.50	32.50
W039	4.50	32.50
W038	4.50	32.50
W037	4.50	32.50
W030	4.50	32.50

NOTES:

1. CUT WIRES (ITEMS 4–9) TO 2.25 FOR AC329 OR 16.25 FOR AC329A.
2. STRIP WIRE .080 ON EACH END.
3. CRIMP PT48 TERMINAL (ITEM 3) ON EACH END.
4. ROUTE TO INSPECTION.
5. PLACE TERMINATED ENDS INTO PA349A HOUSING (ITEM 1) AND PA346A (ITEM 2) AS SHOWN.
6. ROUTE TO INSPECTION.
7. TWIST 1–2 TURNS PER INCH.
8. ROUTE TO INSPECTION.

ITEM / REF. DES.	PART NO.	QTY.	DESCRIPTION
9	W049	SEE CHART	26 GAGE, 19 X 38 BLUE UL–1429
8	W047	SEE CHART	26 GAGE, 19 X 38 BLACK UL–1429
7	W039	SEE CHART	26 GAGE, 19 X 38 GREEN UL–1429
6	W038	SEE CHART	26 GAGE, 19 X 38 RED UL–1429
5	W037	SEE CHART	26 GAGE, 19 X 38 YELLOW UL–1429
4	W030	SEE CHART	26 GAGE, 19 X 38 WHITE UL–1429
3	PT48	24	CONTACT, CRIMP SOCKET, 24–28 AWG
2	PA349A	1	CONN, 12P, SR. HSG, .079 CTRS.
1	PA346A	1	CONN, 13P, SR. HSG, .079 CTRS.

REV.	DESCRIPTION	BY	DATE
A	RELEASED, ECN #5487	SR	21FEB97

THIS DOCUMENT IS CONFIDENTIAL AND PROPRIETARY AND IS THE SOLE PROPERTY OF INVIVO RESEARCH INCORPORATED (IRI). IT IS NOT TO BE DISCLOSED TO ANY PARTY, REPRODUCED OR USED IN ANY OTHER MANNER WITHOUT WRITTEN CONSENT OF SAID COMPANY. INVIVO MAINTAINS THE RIGHT TO CHANGE SPECIFICATIONS AT ANY TIME WITHOUT PRIOR NOTICE.

UNLESS OTHERWISE SPECIFIED TOLERANCES ARE
.XX = ± .25
.XXX = ± .015
ANGLES = ± ——

DRAWN	JRB	27JAN97
DESIGNED	JRB	27JAN97
CHECKED		
APPROVED		

INCHES — THIRD ANGLE PROJECTION

DO NOT SCALE THIS DRAWING !!!

Invivo Research Inc.
PRECISION BIOMEDICAL INSTRUMENTS
12601 RESEARCH PARKWAY, ORLANDO, FL 32826

TITLE
ASSEMBLY: AC329, AC329A
CAB, DATA, TRANSCEIVER, TELEMETRY

CAD SCALE	SHEET	DWG. NO.	REV.
2:1	1 OF 1	C59B322	A

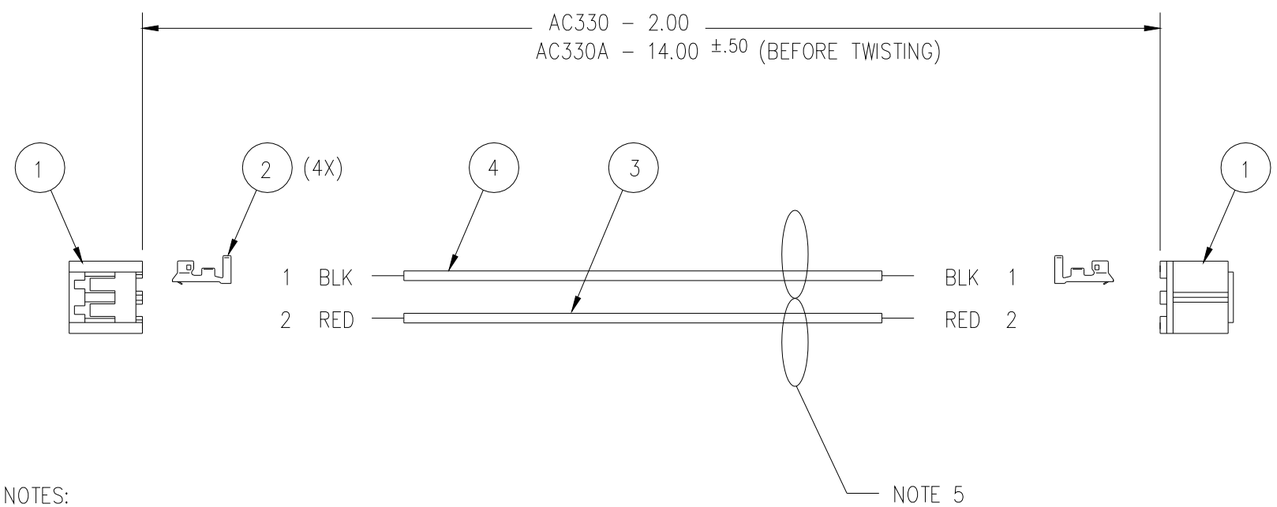

WIRE QUANTITY CHART		
	AC330	AC330A
PART NO.	QTY.	QTY.
W047	2.25	14.25
W038	2.25	14.25

NOTES:

1. CUT WIRES (ITEMS 3 & 4) PER CHART
2. STRIP WIRE .093 ON EACH END.
3. CRIMP PT33 TERMINAL (ITEM 2) ON EACH END.
4. ROUTE TO INSPECTION.
5. TWIST 1–2 TURNS PER INCH.
6. PLACE TERMINATED ENDS INTO PA348A HOUSINGS (ITEM 1) AS SHOWN.
7. ROUTE TO INSPECTION.

ITEM / REF. DES.	PART NO.	QTY.	DESCRIPTION
4	W047	SEE CHART	26 GAGE, 19 X 38 BLACK UL–1429
3	W038	SEE CHART	26 GAGE, 19 X 38 RED UL–1429
2	PT33	4	CONTACT, CRIMP SOCKET, 22–30 AWG
1	PA348A	2	CONN, 2P, SR. HSG, .098 CTRS.

REV.	DESCRIPTION	BY	DATE
B	PER ECN #5736	CHY	19MAY97
A	RELEASED, ECN #5487	SR	21FEB97

THIS DOCUMENT IS CONFIDENTIAL AND PROPRIETARY AND IS THE SOLE PROPERTY OF INVIVO RESEARCH INCORPORATED (IRI). IT IS NOT TO BE DISCLOSED TO ANY PARTY, REPRODUCED OR USED IN ANY OTHER MANNER WITHOUT WRITTEN CONSENT OF SAID COMPANY. INVIVO RESEARCH INC. MAINTAINS THE RIGHT TO CHANGE SPECIFICATIONS AT ANY TIME WITHOUT PRIOR NOTICE.

UNLESS OTHERWISE SPECIFIED TOLERANCES ARE
.XX = ± .25
.XXX = ± .015
ANGLES = ± ——

DRAWN	SR	17FEB97
DESIGNED	DS	14FEB97
CHECKED		
APPROVED		

INCHES — THIRD ANGLE PROJECTION

DO NOT SCALE THIS DRAWING !!!

Invivo Research Inc.
PRECISION BIOMEDICAL INSTRUMENTS
Subsidiary of Invivo Corporation
12601 RESEARCH PARKWAY., ORLANDO, FL 32826

TITLE:
ASSEMBLY: AC330, AC330A
CAB, POWER, TRANSCEIVER, TELEMETRY

CAD SCALE:	SHEET:	DWG. NO.:	REV.:
2:1	1 OF 1	C59B323	B

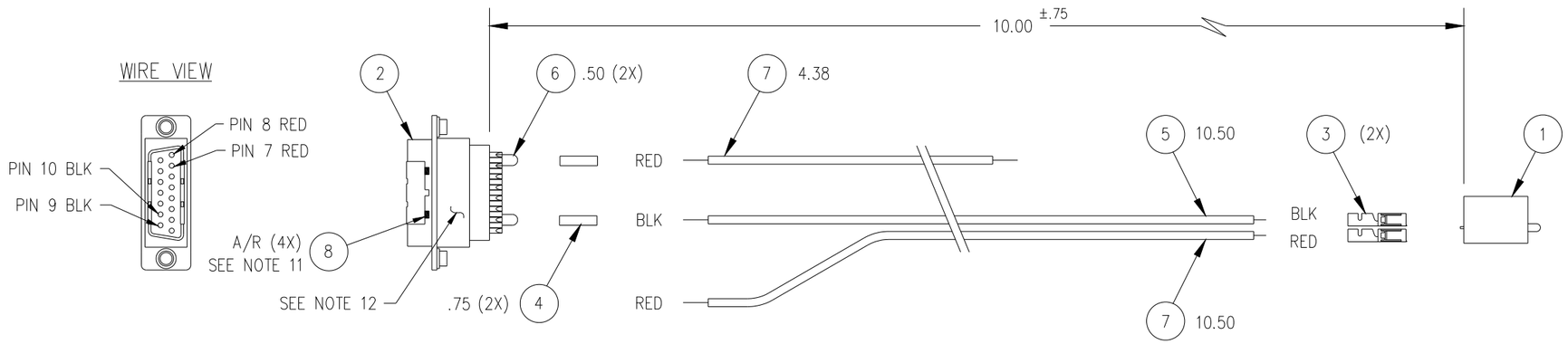

NOTES:

1. CUT ONE P/N W022 RED WIRE (ITEM 7) TO 4.38 LENGTH.
2. CUT ONE EACH P/N W017 BLACK WIRE (ITEM 5) AND RED WIRE (ITEM 7) TO 10.50 LENGTH.
3. STRIP AND TIN .38 BOTH ENDS OF THE 4.38 RED WIRE.
4. STRIP 10.50 RED AND BLACK WIRES .125 ON ONE END, STRIP AND TIN .38 ON THE OTHER END.
5. CRIMP P/N PT09 TERMINALS (ITEM 3) ONTO UNTINNED WIRE ENDS.
6. CUT TWO PIECES OF P/N W019 BUSS WIRE (ITEM 6) .50 LONG AND MAKE JUMPER LOOP BETWEEN PINS 7 & 8 AND PINS 9 & 10 ON P/N PA374 CONNECTOR (ITEM 2) AS SHOWN.
7. J-HOOK AND SOLDER ONE TINNED END OF THE 4.38 RED WIRE AND BLACK WIRE TO THE JUMPERS OF THE CONNECTOR (ITEM 2), POSITION AS INDICATED.
8. ROUTE TO INSPECTION.
9. SLIDE .75 PIECE OF P/N WT05 HEAT SHRINK (ITEM 4) OVER SOLDER JOINTS AND SHRINK.
10. INSERT TERMINALS INTO P/N PA26 HOUSING (ITEM 1) AS SHOWN, ENSURING CORRECT WIRE TO PIN MATING.
11. ADD A SMALL DROP OF P/N M020 ADHESIVE (ITEM 8) AT EACH SLIT TO SECURE CONNECTOR GROUNDING CLIPS. USE P/N M019 ACCELERATOR (ITEM 9).
12. USING INDELIBLE INK, PRINT ASSEMBLY NUMBER, REVISION, LOT NUMBER AND ASSEMBLER INITIALS IN AREA SHOWN.
13. ROUTE TO INSPECTION.

ITEM / REF. DES.	PART NO.	QTY.	DESCRIPTION
9	M019	A/R	ACCELERATOR, TAKPAK, LOCTITE, 710
8	M020	A/R	ADHESIVE, LOCTITE TOUGHENED, 411
7	W022	14.88	WIRE, 18 GAGE 19 X 30 RED UL-1430
6	W019	1.00	WIRE, BUSS, SOFT DRAWN, 24 GAGE
5	W017	10.50	WIRE, 18 GAGE 19 X 30 BLK UL-1430
4	WT05	1.50	HEAT SHRINK, 3/16 ID, BLACK
3	PT09	2	TERMINAL, RECEPT, REEL 102100-6
2	PA374	1	CONN, DB15, FLTR., MALE, SLDR. CUP, 2500pF
1	PA26	1	HOUSING, SR, 3 PIN (.156)

REV.	DESCRIPTION	BY	DATE
D	PER ECN #7894	CHY	1MAY01
C	PER ECN #7329	SR	24AUG99
B	PER ECN #6397M	CHY	20FEB98
A	RELEASED, ECN #6226	SR	5DEC97

THIS DOCUMENT IS CONFIDENTIAL AND PROPRIETARY AND IS THE SOLE PROPERTY OF INVIVO RESEARCH INCORPORATED (IRI). IT IS NOT TO BE DISCLOSED TO ANY PARTY, REPRODUCED OR USED IN ANY OTHER MANNER WITHOUT WRITTEN CONSENT OF SAID COMPANY. INVIVO RESEARCH INC. MAINTAINS THE RIGHT TO CHANGE SPECIFICATIONS AT ANY TIME WITHOUT PRIOR NOTICE.

UNLESS OTHERWISE SPECIFIED TOLERANCES ARE
.XX = ± .25
.XXX = ± .015
ANGLES = ± —

DRAWN	SR	3DEC97
DESIGNED	JB	2DEC97
CHECKED		
APPROVED		

INCHES — THIRD ANGLE PROJECTION

DO NOT SCALE THIS DRAWING !!!

Invivo Research Inc.
PRECISION BIOMEDICAL INSTRUMENTS
Subsidiary of Invivo Corporation
12601 RESEARCH PARKWAY., ORLANDO, FL 32826

TITLE:
CABLE ASSEMBLY: AC355
CAB, LOW VOLTAGE DC POWER, 3155

CAD SCALE:	SHEET:	DWG. NO.:	REV.:
NONE	1 OF 1	C59B345	D

ECN5877

LF19 REV. A

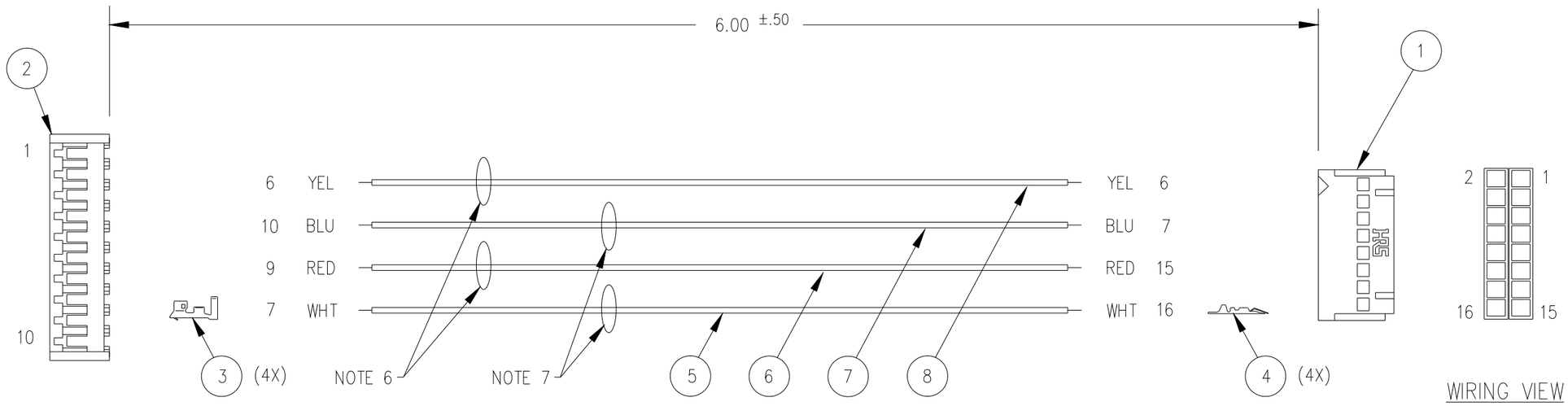

NOTES:

1. CUT WIRES (ITEMS 5–8) TO 6.75 LENGTH.
2. STRIP WIRES ON ONE END FOR P/N PT33 CONTACTS (ITEM 3) AND THE OPPOSITE END FOR P/N PT34 CONTACTS (ITEM 4) PER AI046.
3. CRIMP P/N PT33 AND P/N PT34 CONTACTS ONTO APPROPRIATE ENDS OF EACH WIRE.
4. ROUTE TO INSPECTION.
5. INSERT CONTACTS INTO P/N PA271A HOUSING (ITEM 1) AS SHOWN, ENSURING CORRECT WIRE TO PIN MATING AS INDICATED.
6. TWIST YELLOW AND RED WIRES TOGETHER APPROXIMATELY FOUR TURNS PER INCH.
7. TWIST BLUE AND WHITE WIRES TOGETHER APPROXIMATELY FOUR TURNS PER INCH.
8. INSERT CONTACTS INTO P/N PA272A HOUSING (ITEM 2) AS SHOWN, ENSURING CORRECT WIRE TO PIN MATING AS INDICATED.
9. ROUTE TO INSPECTION.

ITEM / REF. DES.	PART NO.	QTY.	DESCRIPTION
8	W078	6.75	WIRE, 28 GA, 7/36, YEL, UL–1429
7	W076	6.75	WIRE, 28 GA, 7/36, BLU, UL–1429
6	W073	6.75	WIRE, 28 GA, 7/36, RED, UL–1429
5	W072	6.75	WIRE, 28 GA, 7/36, WHT, UL–1429
4	PT34	4	CONTACT, CRIMP SOCKET, 24–28 AWG
3	PT33	4	CONTACT, CRIMP SOCKET, 22–30 AWG
2	PA272A	1	CONN, 10P, SR, SOCKET, .098 CTRS.
1	PA271A	1	CONN, 16P, DR, SOCKET, .079 CTRS

REV.	DESCRIPTION	BY	DATE
A	RELEASED, ECN #6646	SR	1JUN98

THIS DOCUMENT IS CONFIDENTIAL AND PROPRIETARY AND IS THE SOLE PROPERTY OF INVIVO RESEARCH INCORPORATED (IRI). IT IS NOT TO BE DISCLOSED TO ANY PARTY, REPRODUCED OR USED IN ANY OTHER MANNER WITHOUT WRITTEN CONSENT OF SAID COMPANY. INVIVO RESEARCH INC. MAINTAINS THE RIGHT TO CHANGE SPECIFICATIONS AT ANY TIME WITHOUT PRIOR NOTICE.

UNLESS OTHERWISE SPECIFIED TOLERANCES ARE
.XX = ± .25
.XXX = ± .015
ANGLES = ± —

DRAWN	SR	1JUN98
DESIGNED	DS	20MAY98
CHECKED		
APPROVED		

INCHES — THIRD ANGLE PROJECTION

DO NOT SCALE THIS DRAWING !!!

Invivo Research Inc.
PRECISION BIOMEDICAL INSTRUMENTS
Subsidiary of Invivo Corporation
12601 RESEARCH PARKWAY., ORLANDO, FL 32826

TITLE: CABLE ASSEMBLY: AC362
CABLE, INTRCNCT., POWER SUPPLY, AGENT I.D.

CAD SCALE:	SHEET:	DWG. NO.:	REV.:
NONE	1 OF 1	C59B350	A

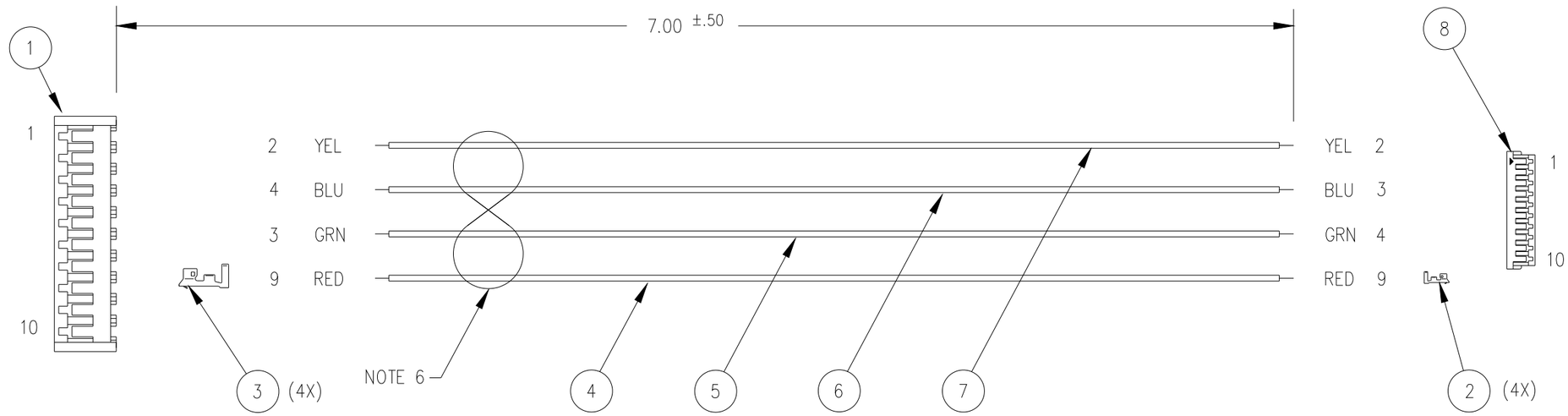

NOTES:

1. CUT WIRES (ITEMS 4–7) TO 7.38 LENGTH.
2. STRIP WIRES ON ONE END FOR P/N PT31 CONTACTS (ITEM 2) AND THE OPPOSITE END FOR P/N PT33 CONTACTS (ITEM 3) PER AI046.
3. CRIMP P/N PT31 AND P/N PT33 CONTACTS ONTO APPROPRIATE ENDS OF EACH WIRE.
4. ROUTE TO INSPECTION.
5. INSERT CONTACTS INTO P/N PA272A HOUSING (ITEM 1) AS SHOWN, ENSURING CORRECT WIRE TO PIN MATING AS INDICATED.
6. TWIST WIRES 1 – 2 TURNS PER INCH.
7. INSERT CONTACTS INTO P/N PA264 HOUSING (ITEM 8) AS SHOWN, ENSURING CORRECT WIRE TO PIN MATING AS INDICATED.
8. ROUTE TO INSPECTION.

ITEM / REF. DES.	PART NO.	QTY.	DESCRIPTION
8	PA264	1	CONN, 10P,SR. SCKT, .049 PITCH
7	W078	7.38	WIRE, 28 GA, 7/36, YEL, UL–1429
6	W076	7.38	WIRE, 28 GA, 7/36, BLU, UL–1429
5	W074	7.38	WIRE, 28 GA, 7/36, GRN, UL–1429
4	W073	7.38	WIRE, 28 GA, 7/36, RED, UL–1429
3	PT33	4	CONTACT, CRIMP SOCKET, 22–30 AWG
2	PT31	4	CONTACT, CRIMP SOCKET, 26–30 AWG
1	PA272A	1	CONN, 10P, SR, SOCKET, .098 CTRS.

REV.	DESCRIPTION	BY	DATE
A	RELEASED, ECN #7512	KCO	18JAN00

THIS DOCUMENT IS CONFIDENTIAL AND PROPRIETARY AND IS THE SOLE PROPERTY OF INVIVO RESEARCH INCORPORATED (IRI). IT IS NOT TO BE DISCLOSED TO ANY PARTY, REPRODUCED OR USED IN ANY OTHER MANNER WITHOUT WRITTEN CONSENT OF SAID COMPANY. INVIVO RESEARCH INC. MAINTAINS THE RIGHT TO CHANGE SPECIFICATIONS AT ANY TIME WITHOUT PRIOR NOTICE.

UNLESS OTHERWISE SPECIFIED TOLERANCES ARE
.XX = ± .25
.XXX = ± .015
ANGLES = ± —

DRAWN	KCO	18JAN00
DESIGNED	RLM	17JAN00
CHECKED		
APPROVED		

INCHES — THIRD ANGLE PROJECTION

DO NOT SCALE THIS DRAWING !!!

Invivo Research Inc.
PRECISION BIOMEDICAL INSTRUMENTS
Subsidiary of Invivo Corporation
12601 RESEARCH PARKWAY., ORLANDO, FL 32826

TITLE: CABLE ASSEMBLY: AC363A
CABLE, INTRCNCT., A/D, AGENT I.D., 3155A

CAD SCALE:	SHEET:	DWG. NO.:	REV.:
NONE	1 OF 1	C59B397	A

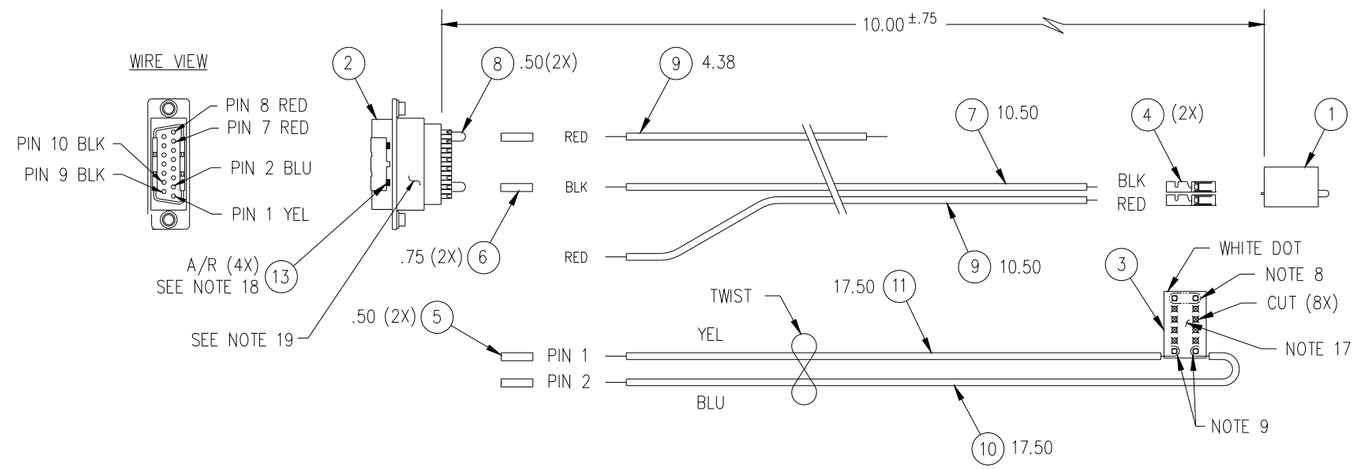

NOTES

1. CUT ONE P/N W022 RED WIRE (ITEM 9) TO 4.38 LENGTH.
2. CUT ONE EACH P/N W017 BLACK WIRE (ITEM 7) AND RED WIRE (ITEM 9) TO 10.50 LENGTH.
3. STRIP AND TIN .38 BOTH ENDS OF THE 4.38 WIRE.
4. STRIP 10.50 RED AND BLACK WIRES .125 ON ONE END, STRIP AND TIN .38 ON THE OTHER END.
5. CRIMP P/N PT09 TERMINALS (ITEM 4) ONTO UNTINNED WIRE ENDS.
6. CUT P/N W076 BLUE WIRE (ITEM 10) AND P/N W078 YELLOW WIRE (ITEM 11) TO 17.50. STRIP AND TIN BOTH ENDS .125.
7. PREP P/N PA431 12-PIN SOCKET (ITEM 3) BY CUTTING EIGHT CENTER PINS AS SHOWN.
8. AS VIEWED ON DRAWING, BEND TWO TOP PINS INWARD UNTIL THEY TOUCH. SOLDER THE PINS TOGETHER AND TRIM.
9. CAREFULLY BEND THE BOTTOM TWO PINS OUTWARD ABOUT 30°. J-HOOK AND SOLDER THE BLUE AND YELLOW WIRES TO THE PINS AS SHOWN. TRIM THE TOP OF THE PINS
10. CUT TWO PIECES OF P/N W019 BUSS WIRE (ITEM 8) .50 LONG AND MAKE JUMPER LOOP BETWEEN PINS 7 & 8 AND PINS 9 & 10 ON P/N PA374 CONNECTOR (ITEM 2) AS SHOWN.
11. SLIP .75 LENGTHS OF P/N WT05 HEAT SHRINK (ITEM 6) AND .50 LENGTHS OF P/N WT04 HEAT SHRINK (ITEM 5) OVER WIRES AS SHOWN.
12. J-HOOK AND SOLDER ONE TINNED END OF THE 4.38 RED WIRE AND BLACK WIRE TO THE JUMPERS OF THE CONNECTOR (ITEM 2), POSITION AS INDICATED IN WIRE VIEW.
13. TWIST AND SOLDER YELLOW AND BLUE WIRES TO PA374 CONNECTOR.
14. ROUTE TO INSPECTION.
15. SLIDE HEAT SHRINK OVER SOLDER JOINTS AND SHRINK.
16. INSERT TERMINALS INTO P/N PA26 HOUSING (ITEM 1) AS SHOWN, ENSURING CORRECT WIRE TO PIN MATING.
17. SPREAD P/N M008A SEALANT (ITEM 12) OVER TOP OF PA431 CONNECTOR TO COVER SOLDER JOINTS AND STRESS RELIEVE WIRES. CAPTURE BLUE WIRE IN SEALANT. ALLOW TO CURE.
18. ADD A SMALL DROP OF P/N M020 ADHESIVE (ITEM 13) AT EACH SLIT TO SECURE CONNECTOR GROUNDING CLIPS. USE P/N M019 ACCELERATOR (ITEM 14).
19. USING INDELIBLE INK, PRINT ASSEMBLY NUMBER, REVISION, LOT NUMBER AND ASSEMBLER INITIALS IN AREA SHOWN.
20. ADD WHITE DOT TO END OF PA431 AS SHOWN.
21. ROUTE TO INSPECTION.

ITEM / REF. DES.	PART NO.	QTY.	DESCRIPTION
14	M019	A/R	ACCELERATOR, TAKPAK, LOCTITE, 710
13	M020	A/R	ADHESIVE, LOCTITE TOUGHENED, 411
12	M008A	REF.	ADHESIVE/SEALANT, RTV, CLEAR, 732
11	W078	17.50	WIRE, 28 GAGE, 7 x 36, YEL, UL-1429
10	W076	17.50	WIRE, 28 GAGE, 7 x 36, BLU, UL-1429
9	W022	14.88	WIRE, 18 GAGE, 19 x 30, RED, UL-1430
8	W019	1.00	WIRE, BUSS, SOFT DRAWN, 24 GAGE
7	W017	10.50	WIRE, 18 GAGE, 19 x 30, BLK, UL-1430
6	WT05	1.50	HEAT SHRINK, 3/16" I.D., BLACK
5	WT04	1.00	HEAT SHRINK, 3/32" I.D., BLACK
4	PT09	2	TERMINAL, RECEPT., REEL 102100-6
3	PA431	1	CONN., 12P, DR, ST SOCKET, .050 CTRS.
2	PA374	1	CONN., DB15, FLTR., MALE, SLDR. CUP, 2500pF
1	PA26	1	HOUSING, SR, 3 PIN (.156)

REV.	DESCRIPTION	BY	DATE
B	PER ECN #7894	CHY	1MAY01
A	RELEASED, ECN #7663	CHY	25JUL00

THIS DOCUMENT IS CONFIDENTIAL AND PROPRIETARY AND IS THE SOLE PROPERTY OF INVIVO RESEARCH INCORPORATED (IRI). IT IS NOT TO BE DISCLOSED TO ANY PARTY, REPRODUCED OR USED IN ANY OTHER MANNER WITHOUT WRITTEN CONSENT OF SAID COMPANY. INVIVO RESEARCH INC. MAINTAINS THE RIGHT TO CHANGE SPECIFICATIONS AT ANY TIME WITHOUT PRIOR NOTICE.

UNLESS OTHERWISE SPECIFIED TOLERANCES ARE
.XX = ± .25
.XXX = ± .015
ANGLES = ± 1°

DRAWN	CHY	25JUL00
DESIGNED	DM	25JUL00
CHECKED		
APPROVED		

INCHES — THIRD ANGLE PROJECTION

DO NOT SCALE THIS DRAWING !!!

Invivo Research Inc.
PRECISION BIOMEDICAL INSTRUMENTS
Subsidiary of Invivo Corporation
12601 RESEARCH PARKWAY., ORLANDO, FL 32826

TITLE: CABLE ASSEMBLY: AC355A
CAB, LOW VOLTAGE DC POWER, 3150

CAD SCALE:	SHEET:	DWG. NO.:	REV.:
NONE	1 of 1	C59B402	B

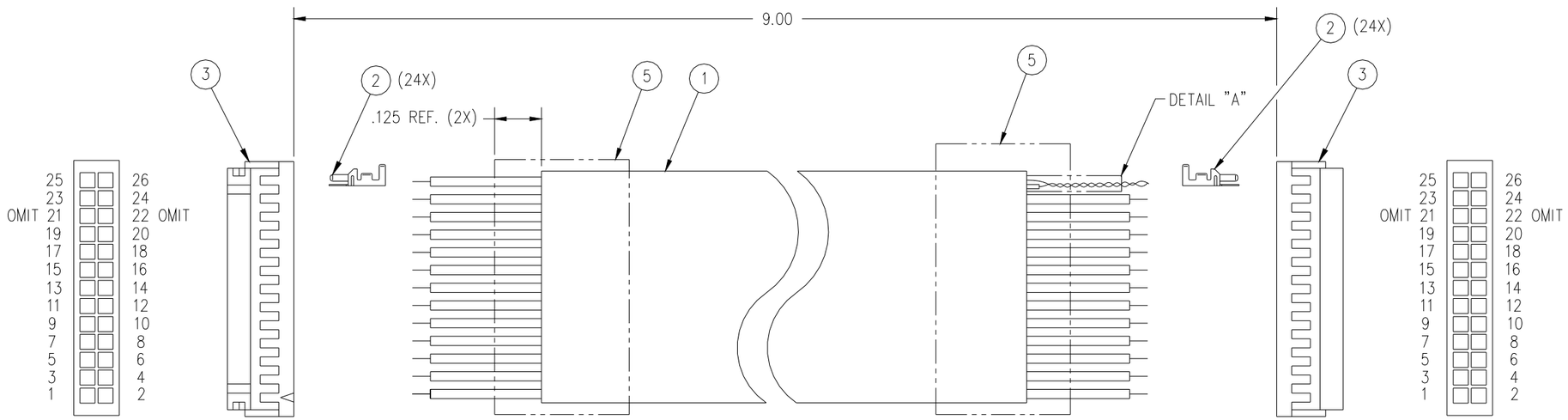

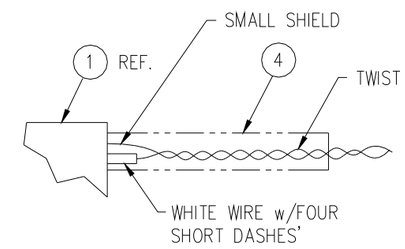

DETAIL A

NOTES

1. CUT CABLE (ITEM 1) TO 9.50 LONG. SLIP TWO .50 $^{\pm.06}$LENGTHS OF SLEEVING (ITEM 5) ONTO CABLE AND LOCATE TOWARDS CENTER. DO NOT SHRINK
2. ON LEFT END, STRIP THE JACKET BACK 1.00. CUT THE BRAIDED SHIELD OFF EVEN WITH THE CABLE JACKET
3. ON THE RIGHT END, BEING CAREFUL NOT TO NICK THE BRAIDED SHIELD, STRIP BACK THE JACKET 1.00. UN-BRAID THE SHIELD ALL THE WAY BACK TO THE JACKET
4. TWIST ABOUT 10 STRANDS OF ADJACENT SHIELD WIRES TO FORM A SMALL SHIELD WIRE. CUT OFF ALL THE REMAINING SHIELD WIRES AT THE CABLE JACKET
5. ON BOTH ENDS, STRIP ALL WIRES .078. ON RIGHT END, STRIP WHITE WIRE w/FOUR SHORT DASHES APPROXIMATELY .88 LONG. TWIST THE SMALL SHIELD WIRES TOGETHER WITH THIS STRIPPED WIRE TO FORM A SINGLE WIRE. ADD APPROXIMATELY .80 LENGTH OF SLEEVING (ITEM 6) OVER THIS WIRE LEAVING .078 EXPOSED AND SHRINK IN PLACE, PER DETAIL A
6. ADD A TERMINAL (ITEM 2) TO ALL WIRES ON BOTH ENDS
7. ROUTE TO INSPECTION
8. INSERT THE WIRES INTO EACH CONNECTOR (ITEM 3) PER THE PIN NUMBER/COLOR CHART AND WIRING VIEWS. NOTE THAT WIRES ARE IDENTIFIED BY A SOLID COLOR ALONE, WITH A NUMBER OF SHORT BLACK DASHES, OR WITH A SINGLE LONG DASH. THE SAME WIRE "COLOR" MUST BE IN THE SAME PIN LOCATION AT BOTH ENDS OF THE CABLE
9. TEST THE CABLE TO INSURE CORRECT PIN-TO-PIN CONNECTIONS
10. PLACE THE PREVIOUSLY ADDED SLEEVING (ITEM 5) TO OVERLAP THE CABLE JACKET BY ABOUT .125 (REF.) AT EACH END AND SHRINK IN PLACE

REV.	DESCRIPTION	BY	DATE
G	PER ECN #5577	KCO	19FEB97
F	PER ECN #5303	CHY	24SEP96
E	PER ECN #5273	CHY	9SEP96
D	PER ECN #5021	CHY	5/8/96
C	PER ECN #4810	CHY	2/28/96
B	PER ECN NO. 4740	CHY	1/15/96
A	RELEASE, ECN #4571	SR	10/13/95

THIS DOCUMENT IS CONFIDENTIAL AND PROPRIETARY AND IS THE SOLE PROPERTY OF INVIVO RESEARCH INCORPORATED (IRI). IT IS NOT TO BE DISCLOSED TO ANY PARTY, REPRODUCED OR USED IN ANY OTHER MANNER WITHOUT WRITTEN CONSENT OF SAID COMPANY. INVIVO MAINTAINS THE RIGHT TO CHANGE SPECIFICATIONS AT ANY TIME WITHOUT PRIOR NOTICE.

ITEM / REF. DES.	PART NO.	QTY.	DESCRIPTION
5	WT19	1.00	HEAT SHRINK, 3/8" I.D., NEOPRENE
4	WT07	.75	HEAT SHRINK, 3/64" I.D., BLACK
3	PA290A	2	CONN, 26P, DR, SOCKET, .079 CTRS.
2	PT34	48	CONTACT, CRIMP SOCKET, #24-#28 AWG
1	W066	9.50	CABLE, SHLD, 24 COND., 28 AWG

UNLESS OTHERWISE SPECIFIED TOLERANCES ARE
.XX = ± .25
.XXX = ± .015
ANGLES = ± —

DRAWN	SR	10/10/95
DESIGNED	RS	9/28/95
CHECKED		
APPROVED		

INCHES — THIRD ANGLE PROJECTION

DO NOT SCALE THIS DRAWING !!!

Invivo Research Inc.
PRECISION BIOMEDICAL INSTRUMENTS
12601 RESEARCH PARKWAY., ORLANDO, FL 32826

TITLE
CABLE ASSEMBLY: AC252
CABLE, "ACTIVE" LCD DISPLAY, 3500

CAD SCALE	SHEET	DWG. NO.	REV.
NONE	1 OF 2	C59C201	G

WIRE CHART	
PIN NO.	WIRE COLOR
1	PINK
2	ORANGE
3	YELLOW
4	WHITE
5	PINK w/LONG DASH
6	ORANGE w/LONG DASH
7	YELLOW w LONG DASH
8	WHITE w/LONG DASH
9	PINK w/ONE SHORT DASH
10	ORANGE w/ONE SHORT DASH
11	YELLOW w/ONE SHORT DASH
12	WHITE w/ONE SHORT DASH
13	PINK w/TWO SHORT DASHES

WIRE CHART	
PIN NO.	WIRE COLOR
14	ORANGE w/TWO SHORT DASHES
15	YELLOW w/TWO SHORT DASHES
16	WHITE w/TWO SHORT DASHES
17	PINK w/THREE SHORT DASHES
18	ORANGE w/THREE SHORT DASHES
19	YELLOW w/THREE SHORT DASHES
20	WHITE w/THREE SHORT DASHES
21	SKIP
22	SKIP
23	PINK w/FOUR SHORT DASHES
24	ORANGE w/FOUR SHORT DASHES
25	YELLOW w/FOUR SHORT DASHES
26	WHITE w/FOUR SHORT DASHES

REV.	DESCRIPTION	BY	DATE

THIS DOCUMENT IS CONFIDENTIAL AND PROPRIETARY AND IS THE SOLE PROPERTY OF INVIVO RESEARCH INCORPORATED (IRI). IT IS NOT TO BE DISCLOSED TO ANY PARTY, REPRODUCED OR USED IN ANY OTHER MANNER WITHOUT WRITTEN CONSENT OF SAID COMPANY. INVIVO MAINTAINS THE RIGHT TO CHANGE SPECIFICATIONS AT ANY TIME WITHOUT PRIOR NOTICE.

UNLESS OTHERWISE SPECIFIED TOLERANCES ARE
.XX = ± .25
.XXX = ± .015
ANGLES = ± —

DRAWN	SR	10/10/95
DESIGNED	RS	9/28/95
CHECKED		
APPROVED		

INCHES

THIRD ANGLE PROJECTION

DO NOT SCALE THIS DRAWING !!!

Invivo Research Inc.
PRECISION BIOMEDICAL INSTRUMENTS
12601 RESEARCH PARKWAY., ORLANDO, FL 32826

TITLE
CABLE ASSEMBLY: AC252
CABLE, "ACTIVE" LCD DISPLAY, 3500

CAD SCALE	SHEET	DWG. NO.	REV.
NONE	2 OF 2	C59C201	G

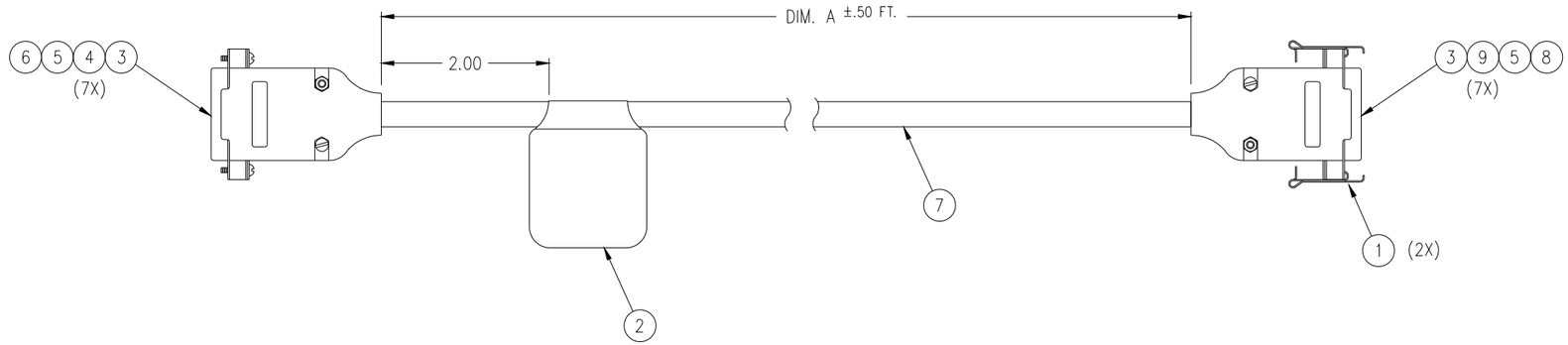

PIN TO WIRE COLOR CHART		
PIN	COLOR	FUNCTION
1	WHITE	TX
2	GRAY	RX
7	ORANGE	POWER
8	RED	POWER
9	BLACK	GROUND
10	VIOLET	GROUND
11	BLUE	GROUND

CABLE LENGTH CHART		
ASSY. P/N	DIM. A	TAG P/N
AC348	25.00 FT.	L167
AC348A	5.00 FT.	L167A

ITEM / REF. DES.	PART NO.	QTY.	DESCRIPTION
9	PT29	7	SOCKET, MACHINED, (.04), 24-20 AWG
8	PA358A	1	CONN, DB15, RCPT, SNAP-IN
7	W052	SEE CHART	CABLE, 22 GAGE, 10 CONDUCTOR, MRI
6	PA141	1	PLUG, MALE, DB15
5	PA140	2	BACKSHELL, CONNECTOR 15PIN
4	PA77	7	CONTACT, PIN, CRIMP, 24-20 AWG
3	M092	A/R	TAPE, SHIELDING, COPPER 1" WIDE
2	SEE CHART	1	CABLE TAG, POWER ADAPTER CABLE, 3150
1	H080	2	SPRING LATCH, "D" CONNECTOR

REF. ASSEMBLY INSTRUCTION AI055

REV.	DESCRIPTION	BY	DATE
E	PER ECN #7627	CHY	17FEB00
D	PER ECN #6811	CHY	9NOV98
C	PER ECN #6397M	CHY	20FEB98
B	PER ECN #6293	SR	14JAN98
A	RELEASED PER ECN #6080	JRB	29SEP97

THIS DOCUMENT IS CONFIDENTIAL AND PROPRIETARY AND IS THE SOLE PROPERTY OF INVIVO RESEARCH INCORPORATED (IRI). IT IS NOT TO BE DISCLOSED TO ANY PARTY, REPRODUCED OR USED IN ANY OTHER MANNER WITHOUT WRITTEN CONSENT OF SAID COMPANY. INVIVO RESEARCH INC. MAINTAINS THE RIGHT TO CHANGE SPECIFICATIONS AT ANY TIME WITHOUT PRIOR NOTICE.

UNLESS OTHERWISE SPECIFIED TOLERANCES ARE
.XX = ± .25
.XXX = ± ——
ANGLES = ± ——

DRAWN	JRB	29SEP97
DESIGNED	JRB	29SEP97
CHECKED		
APPROVED		

INCHES — THIRD ANGLE PROJECTION

DO NOT SCALE THIS DRAWING !!!

Invivo Research Inc.
PRECISION BIOMEDICAL INSTRUMENTS
Subsidiary of Invivo Corporation
12601 RESEARCH PARKWAY., ORLANDO, FL 32826

TITLE: ASSEMBLY: AC348 & AC348A CAB, POWER ADAPTER, 3150

CAD SCALE:	SHEET:	DWG. NO.:	REV.:
NONE	1 OF 1	C59C339	E

ECN5877

LF20 REV. A

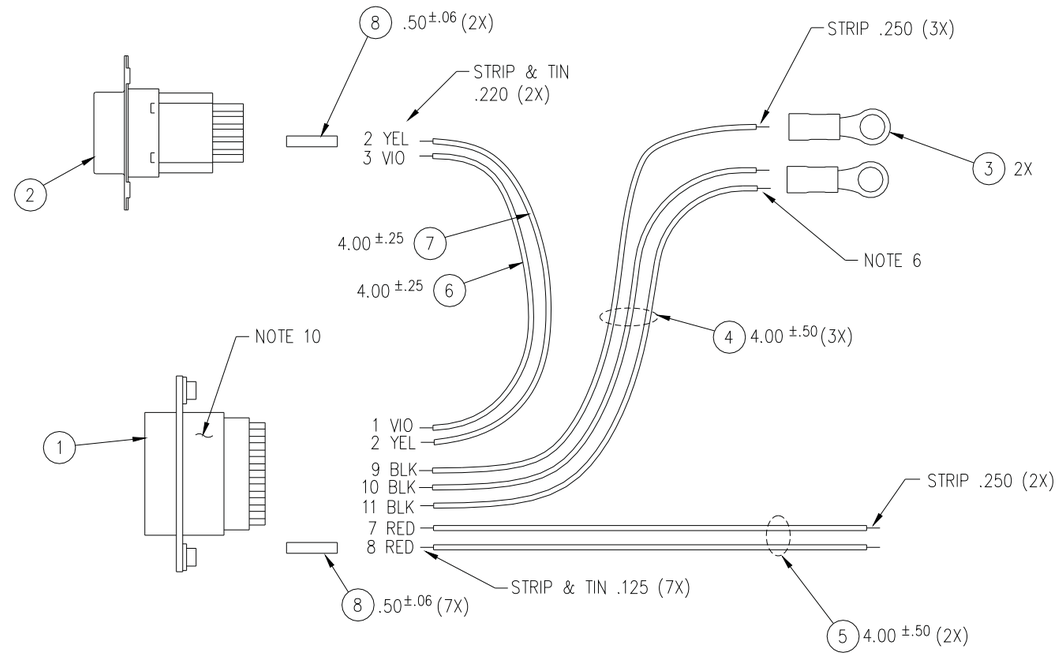

NOTES

1. CUT THREE P/N W005 BLACK WIRES AND TWO P/N W009 RED WIRES (ITEMS 4 & 5) TO 4.00.
2. CUT ONE EACH P/N W008 VIOLET WIRE AND P/N W012 YELLOW WIRE (ITEMS 6 & 7) TO 4.00.
3. STRIP AND TIN ALL WIRES AS NOTED.
4. PLACE .50 LENGTHS OF P/N WT04 HEAT SHRINK ONTO WIRES AS SHOWN. NOTE TWO PIECES ON YELLOW AND VIOLET WIRES. DO NOT SHRINK.
5. SOLDER TINNED END OF WIRES TO PIN NUMBERS SHOWN FOR P/N PA141A CONNECTOR (ITEM 1) AND FOR P/N PA370 CONNECTOR (ITEM 2).
6. TWIST TOGETHER THE UNTINNED ENDS OF BLACK WIRES INDICATED AND CRIMP P/N PT16 RING TERMINAL (ITEM 3) ONTO THE PAIR AS SHOWN.
7. CRIMP P/N PT16 RING TERMINAL ONTO UNTINNED END OF REMAINING BLACK WIRE.
8. ROUTE TO INSPECTION.
9. PLACE PREVIOUSLY APPLIED HEAT SHRINK OVER ALL CONNECTOR SOLDER CUPS AND SHRINK IN PLACE.
10. PRINT ASSEMBLY NUMBER, REVISION, LOT NUMBER, AND ASSEMBLER INITIALS ON UNPRINTED SIDE OF PA141A CONNECTOR IN AREA SHOWN.
11. ROUTE TO INSPECTION.

ITEM / REF. DES.	PART NO.	QTY.	DESCRIPTION
8	WT04	4.50	HEAT SHRINK, 3/32 ID BLACK
7	W012	4.00	22 GAGE 19 X 34 YELLOW UL-1429
6	W008	4.00	22 GAGE 19 X 34 VIOLET UL-1429
5	W009	8.00	22 GAGE 19 X 34 RED UL-1429
4	W005	12.00	22 GAGE 19 X 34 BLACK UL-1429
3	PT16	2	TERM, RING TONGUE, #10, 22-16 GA
2	PA370	1	CONN, DB9 RECPT, SOLDRCP, 3000-8000 PF
1	PA141A	1	CONN, FILTR, DB15F, SOLDRCP, 2500PF

REV.	DESCRIPTION	BY	DATE
B	PER ECN #7663	CHY	25JUL00
A	PER ECN #6080	JRB	29SEP97

THIS DOCUMENT IS CONFIDENTIAL AND PROPRIETARY AND IS THE SOLE PROPERTY OF INVIVO RESEARCH INCORPORATED (IRI). IT IS NOT TO BE DISCLOSED TO ANY PARTY, REPRODUCED OR USED IN ANY OTHER MANNER WITHOUT WRITTEN CONSENT OF SAID COMPANY. INVIVO MAINTAINS THE RIGHT TO CHANGE SPECIFICATIONS AT ANY TIME WITHOUT PRIOR NOTICE.

UNLESS OTHERWISE SPECIFIED TOLERANCES ARE
.XX = ± .25
.XXX = ± .015
ANGLES = ± ——

DRAWN	JRB	6OCT97
DESIGNED	JRB	6OCT97
CHECKED		
APPROVED		

INCHES — THIRD ANGLE PROJECTION

DO NOT SCALE THIS DRAWING !!!

Invivo Research Inc.
PRECISION BIOMEDICAL INSTRUMENTS
Subsidiary of Invivo Corporation
12601 RESEARCH PARKWAY, ORLANDO, FL 32826

TITLE ASSEMBLY: AC349
CAB, POWER-I/O, 3150

CAD SCALE	SHEET	DWG. NO.	REV.
NONE	1 OF 1	C59C340	B

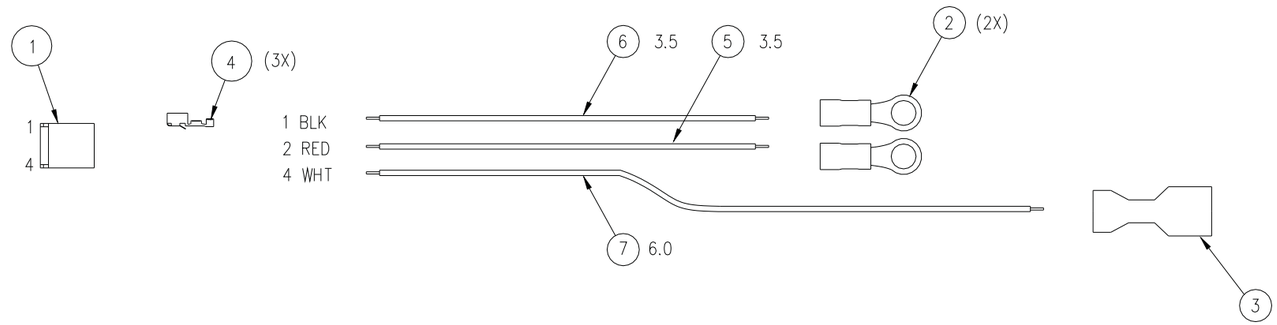

NOTES:

1. CUT P/N W009, W005, AND W032 WIRES (ITEMS 5, 6, 7) TO LENGTH SHOWN.
2. STRIP ONE END OF EACH WIRE .125. STRIP THE OTHER END .250.
3. CRIMP P/N PT36 CONTACT (ITEM 4) ON THE .125 STRIPPED END OF EACH OF THE WIRES.
4. CRIMP P/N PT16 TERMINALS (ITEM 2) ON THE RED AND BLACK WIRES (ITEMS 5 & 6).
5. CRIMP P/N PT05 TERMINAL (ITEM 3) ON THE WHITE WIRE (ITEM 7).
6. ROUTE TO INSPECTION.
7. INSERT PT36-CRIMPED CONTACTS INTO P/N PA344A CONNECTOR (ITEM 1), ENSURING CORRECT WIRE-TO-PIN MATING.
8. ROUTE TO INSPECTION.

ITEM / REF. DES.	PART NO.	QTY.	DESCRIPTION
7	W032	6.0	22 GAGE 19X 34 WHITE UL-1429
6	W005	3.5	22 GAGE 19 X 34 BLACK UL-1429
5	W009	3.5	22 GAGE 19 X 34 RED UL-1429
4	PT36	3	CONTACT, CRIMP SOCKET, 22-26 AWG
3	PT05	1	FAST-ON 22-18 AWG
2	PT16	2	TERMINAL, RING TONGUE, #10, 22-16 GA.
1	PA344A	1	CONN, 4P, SR. HSG, LCKG, .100 CTRS.

REV.	DESCRIPTION	BY	DATE
C	PER ECN #6566	KCO	12MAY98
B	PER ECN #6432	JRB	23MAR98
A	RELEASED, ECN #6080	JRB	29SEP97

THIS DOCUMENT IS CONFIDENTIAL AND PROPRIETARY AND IS THE SOLE PROPERTY OF INVIVO RESEARCH INCORPORATED (IRI). IT IS NOT TO BE DISCLOSED TO ANY PARTY, REPRODUCED OR USED IN ANY OTHER MANNER WITHOUT WRITTEN CONSENT OF SAID COMPANY. INVIVO MAINTAINS THE RIGHT TO CHANGE SPECIFICATIONS AT ANY TIME WITHOUT PRIOR NOTICE.

UNLESS OTHERWISE SPECIFIED TOLERANCES ARE
.XX = ± .25
.XXX = ± ——
ANGLES = ± ——

DRAWN	JRB	6OCT97
DESIGNED	JRB	6OCT97
CHECKED		
APPROVED		

INCHES — THIRD ANGLE PROJECTION

DO NOT SCALE THIS DRAWING !!!

Invivo Research Inc.
PRECISION BIOMEDICAL INSTRUMENTS
Subsidiary of Invivo Corporation
12601 RESEARCH PARKWAY, ORLANDO, FL 32826

TITLE
ASSEMBLY: AC350
CAB, POWER ADAPTER LED, 3150

CAD SCALE	SHEET	DWG. NO.	REV.
NONE	1 OF 1	C59C341	C

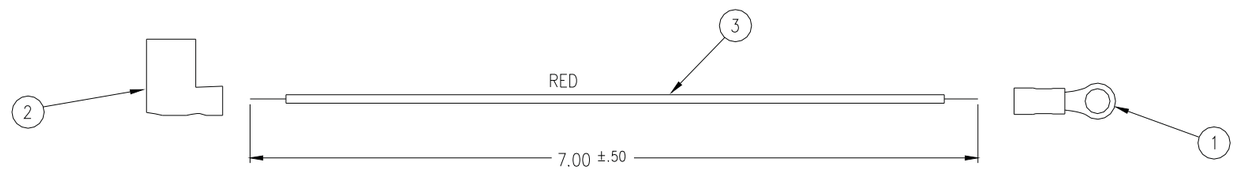

NOTES:

1. CUT P/N W022 RED WIRE (ITEM 3) TO LENGTH SHOWN.
2. STRIP .31 AND CRIMP P/N PT19 TERMINAL (ITEM 2) ON ONE END OF WIRE.
3. STRIP .25 AND CRIMP P/N PT16 TERMINAL (ITEM 1) ON OTHER END OF WIRE.
4. ROUTE TO INSPECTION.

ITEM / REF. DES.	PART NO.	QTY.	DESCRIPTION
3	W022	7.00	18 GAGE, 19 X 30, RED, UL-1430
2	PT19	1	TERM, RECPT, FLAG, FASTON, 22-18 GA.
1	PT16	1	TERMINAL, RING TONGUE, #10, 22-16 GA.

REV.	DESCRIPTION	BY	DATE
A	RELEASED, ECN #6080	JRB	29SEP97

THIS DOCUMENT IS CONFIDENTIAL AND PROPRIETARY AND IS THE SOLE PROPERTY OF INVIVO RESEARCH INCORPORATED (IRI). IT IS NOT TO BE DISCLOSED TO ANY PARTY, REPRODUCED OR USED IN ANY OTHER MANNER WITHOUT WRITTEN CONSENT OF SAID COMPANY. INVIVO MAINTAINS THE RIGHT TO CHANGE SPECIFICATIONS AT ANY TIME WITHOUT PRIOR NOTICE.

UNLESS OTHERWISE SPECIFIED TOLERANCES ARE
.XX = ± .25
.XXX = ± ——
ANGLES = ± ——

DRAWN	JRB	6OCT97
DESIGNED	JRB	6OCT97
CHECKED		
APPROVED		

INCHES — THIRD ANGLE PROJECTION

DO NOT SCALE THIS DRAWING !!!

Invivo Research Inc.
PRECISION BIOMEDICAL INSTRUMENTS
Subsidiary of Invivo Corporation
12601 RESEARCH PARKWAY, ORLANDO, FL 32826

TITLE
ASSEMBLY: AC351
CAB, POS. D/C VOLTAGE, 3150

CAD SCALE	SHEET	DWG. NO.	REV.
NONE	1 OF 1	C59C342	A

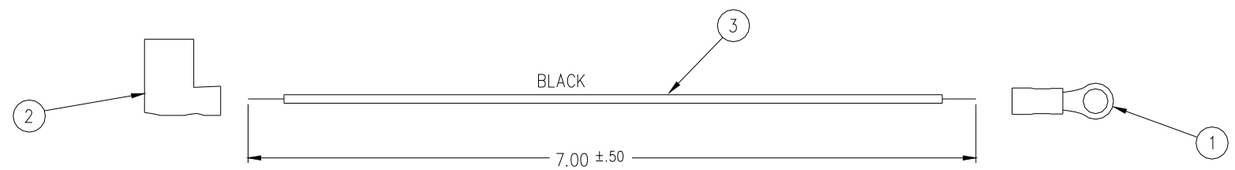

NOTES:

1. CUT P/N W017 BLACK WIRE (ITEM 3) TO LENGTH SHOWN.
2. STRIP .31 AND CRIMP P/N PT19 TERMINAL (ITEM 2) ON ONE END OF WIRE.
3. STRIP .25 AND CRIMP P/N PT16 TERMINAL (ITEM 1) ON OTHER END OF WIRE.
4. ROUTE TO INSPECTION.

ITEM / REF. DES.	PART NO.	QTY.	DESCRIPTION
3	W017	7.00	18 GAGE, 19 X 30, BLACK, UL-1430
2	PT19	1	TERM, RECPT, FLAG, FASTON, 22-18 GA.
1	PT16	1	TERMINAL, RING TONGUE, #10, 22-16 GA.

REV.	DESCRIPTION	BY	DATE
A	RELEASED, ECN #6080	JRB	29SEP97

THIS DOCUMENT IS CONFIDENTIAL AND PROPRIETARY AND IS THE SOLE PROPERTY OF INVIVO RESEARCH INCORPORATED (IRI). IT IS NOT TO BE DISCLOSED TO ANY PARTY, REPRODUCED OR USED IN ANY OTHER MANNER WITHOUT WRITTEN CONSENT OF SAID COMPANY. INVIVO MAINTAINS THE RIGHT TO CHANGE SPECIFICATIONS AT ANY TIME WITHOUT PRIOR NOTICE.

UNLESS OTHERWISE SPECIFIED TOLERANCES ARE
.XX = ± .25
.XXX = ± ——
ANGLES = ± ——

DRAWN	JRB	6OCT97
DESIGNED	JRB	6OCT97
CHECKED		
APPROVED		

INCHES — THIRD ANGLE PROJECTION

DO NOT SCALE THIS DRAWING !!!

Invivo Research Inc.
PRECISION BIOMEDICAL INSTRUMENTS
Subsidiary of Invivo Corporation
12601 RESEARCH PARKWAY, ORLANDO, FL 32826

TITLE
ASSEMBLY: AC352
CAB, NEG. D/C VOLTAGE, 3150

CAD SCALE	SHEET	DWG. NO.	REV.
NONE	1 OF 1	C59C343	A

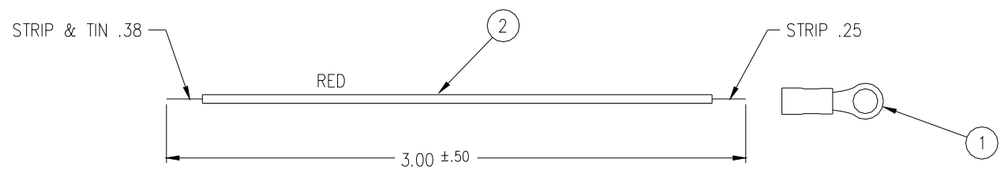

NOTES:

1. CUT P/N W022 RED WIRE (ITEM 2) TO LENGTH SHOWN.
2. STRIP BOTH ENDS AS NOTED
3. CRIMP P/N PT16 TERMINAL (ITEM 1) ON .25 STRIPPED END OF WIRE.
4. ROUTE TO INSPECTION.

ITEM / REF. DES.	PART NO.	QTY.	DESCRIPTION
2	W022	3.00	18 GAGE, 19 X 30, RED, UL-1430
1	PT16	1	TERMINAL, RING TONGUE, #10, 22-16 GA.

REV.	DESCRIPTION	BY	DATE
B	PER ECN #6335	CHY	29JAN98
A	RELEASED, ECN #6080	JRB	29SEP97

THIS DOCUMENT IS CONFIDENTIAL AND PROPRIETARY AND IS THE SOLE PROPERTY OF INVIVO RESEARCH INCORPORATED (IRI). IT IS NOT TO BE DISCLOSED TO ANY PARTY, REPRODUCED OR USED IN ANY OTHER MANNER WITHOUT WRITTEN CONSENT OF SAID COMPANY. INVIVO MAINTAINS THE RIGHT TO CHANGE SPECIFICATIONS AT ANY TIME WITHOUT PRIOR NOTICE.

UNLESS OTHERWISE SPECIFIED TOLERANCES ARE
.XX = ± .25
.XXX = ± ——
ANGLES = ± ——

DRAWN	JRB	6OCT97
DESIGNED	JRB	6OCT97
CHECKED		
APPROVED		

INCHES — THIRD ANGLE PROJECTION

DO NOT SCALE THIS DRAWING !!!

Invivo Research Inc.
PRECISION BIOMEDICAL INSTRUMENTS
Subsidiary of Invivo Corporation
12601 RESEARCH PARKWAY, ORLANDO, FL 32826

TITLE
ASSEMBLY: AC354
CAB, DIODE POWER, 3150

CAD SCALE	SHEET	DWG. NO.	REV.
NONE	1 OF 1	C59C344	B

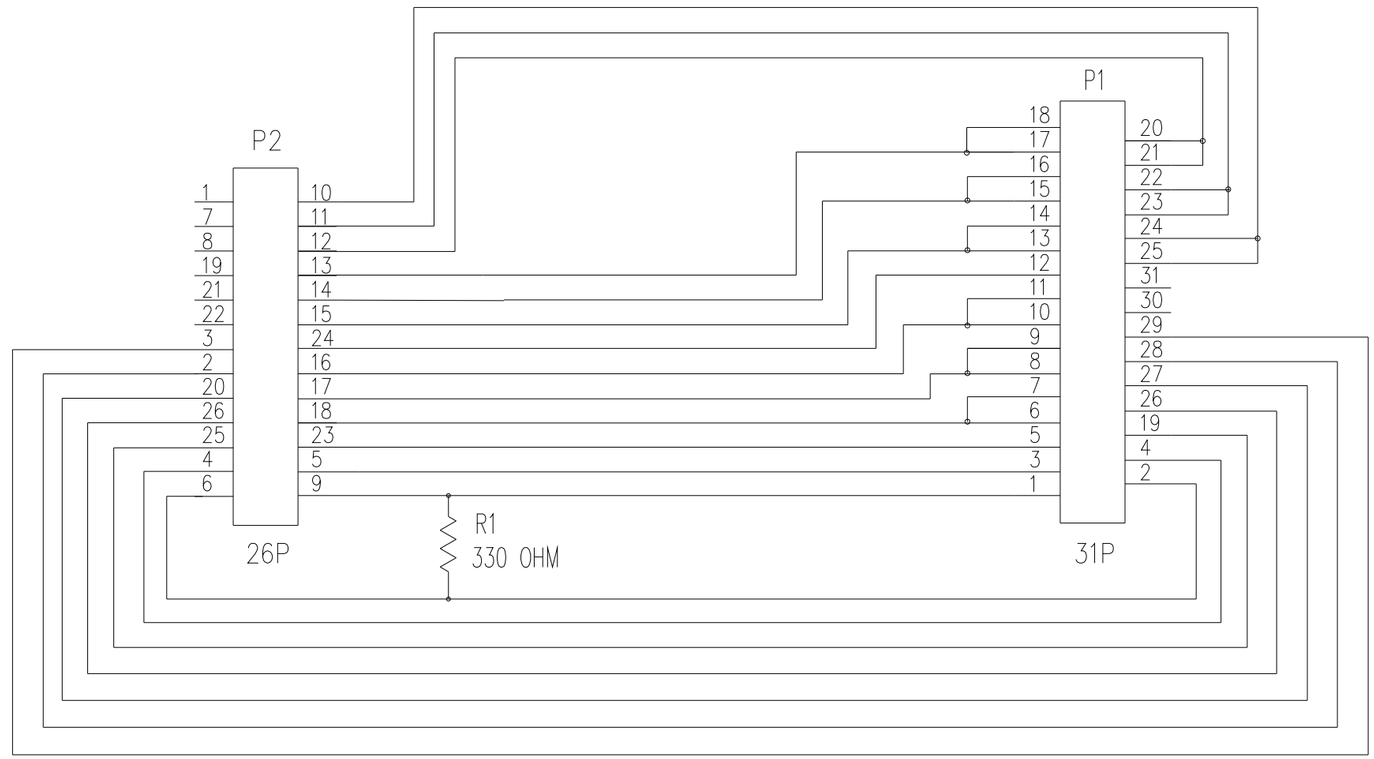

REV.	DESCRIPTION	BY	DATE
C	PER ECN #8010	SLC	26SEP00
B	PER ECN #6798	CHY	24AUG98
A	PER ECN #4878	SLC	29FEB96

THIS DOCUMENT IS CONFIDENTIAL AND PROPRIETARY AND IS THE SOLE PROPERTY OF INVIVO RESEARCH INCORPORATED (IRI). IT IS NOT TO BE DISCLOSED TO ANY PARTY, REPRODUCED OR USED IN ANY OTHER MANNER WITHOUT WRITTEN CONSENT OF SAID COMPANY. INVIVO RESEARCH INC. MAINTAINS THE RIGHT TO CHANGE SPECIFICATIONS AT ANY TIME WITHOUT PRIOR NOTICE.

UNLESS OTHERWISE SPECIFIED TOLERANCES ARE
.XX = ±
.XXX = ±
ANGLES = ±

INCHES

THIRD ANGLE PROJECTION

DO NOT SCALE THIS DRAWING !!!

DRAWN	SLC	29FEB96
DESIGNED	SLC	29FEB96
CHECKED		
APPROVED		

Invivo Research Inc.
PRECISION BIOMEDICAL INSTRUMENTS
Subsidiary of Invivo Corporation
12601 RESEARCH PARKWAY., ORLANDO, FL 32826

TITLE:
SCHEMATIC: AB97 PCA, SHARP 321 LCD ACTIVE DISPLAY CABLE ADAPTER, 3500

CAD SCALE:	SHEET:	DWG. NO.:	REV.:
NONE	1 OF 1	C85B209	C

ECN5877

LF19 REV. A

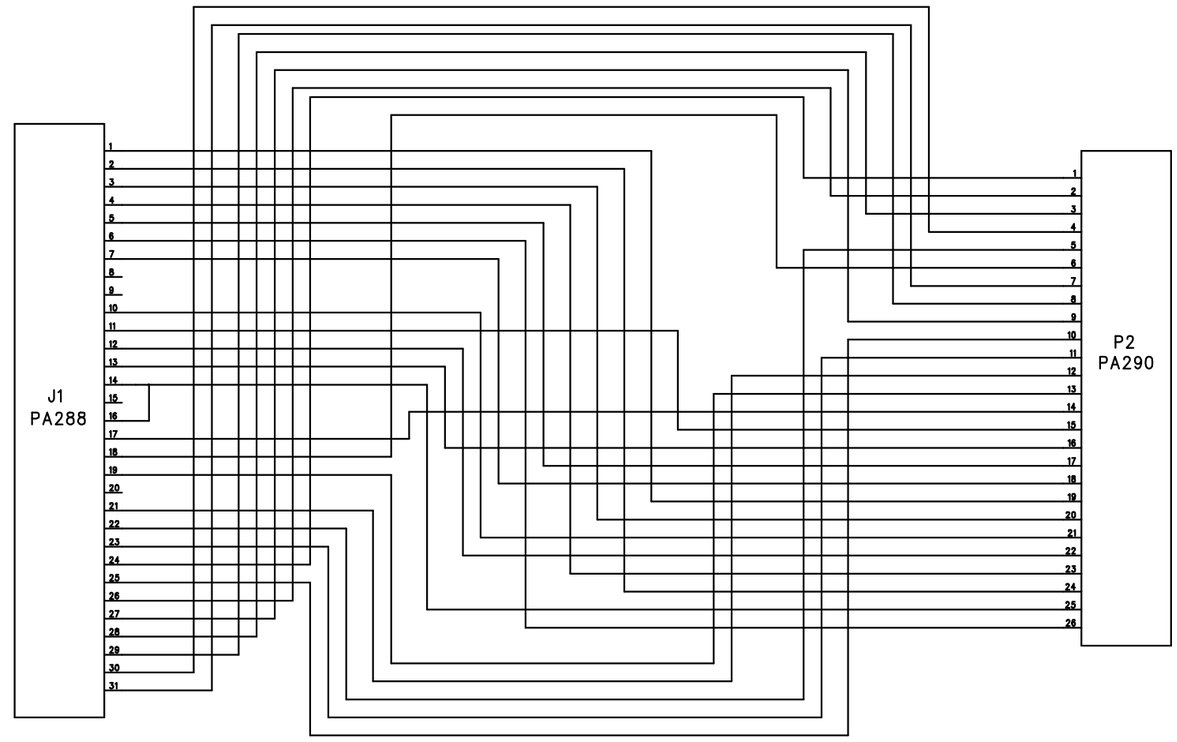

THIS DOCUMENT IS CONFIDENTIAL AND PROPRIETARY AND IS THE SOLE PROPERTY OF INVIVO RESEARCH INCORPORATED. IT IS NOT TO BE DISCLOSED TO ANY PARTY, REPRODUCED OR USED IN ANY OTHER MANNER WITHOUT WRITTEN CONSENT OF SAID COMPANY. INVIVO MAINTAINS THE RIGHT TO CHANGE SPECIFICATIONS AT ANY TIME WITHOUT PRIOR NOTICE.

REV.	DESCRIPTION	BY	DATE
A	RELEASED, ECN#5264	JRB	11SEP96

DRAWN: ROGER BAKER	DATED: 11SEP96		
CHECKED:	DATED:		
QUALITY CONTROL:	DATED:		
RELEASED:	DATED:		

COMPANY: INVIVO RESEARCH INC.
12601 RESEARCH PARKWAY, ORLANDO, FL 32826

TITLE: SCHEMATIC: AB105
PCA, SHARP 35PX PASS. CAB. ADPTR.

CODE:	SIZE:	DRAWING NO:	REV:
	C	C85B216	A

SCALE:NONE SHEET: 1 OF 1

THIS DOCUMENT IS CONFIDENTIAL AND PROPRIETARY AND IS THE SOLE PROPERTY OF INVIVO RESEARCH INCORPORATED. IT IS NOT TO BE DISCLOSED TO ANY PARTY, REPRODUCED, OR USED IN ANY OTHER MANNER WITHOUT WRITTEN CONSENT OF SAID COMPANY. INVIVO MAINTAINS THE RIGHT TO CHANGE SPECIFICATIONS AT ANY TIME WITHOUT PRIOR NOTICE.

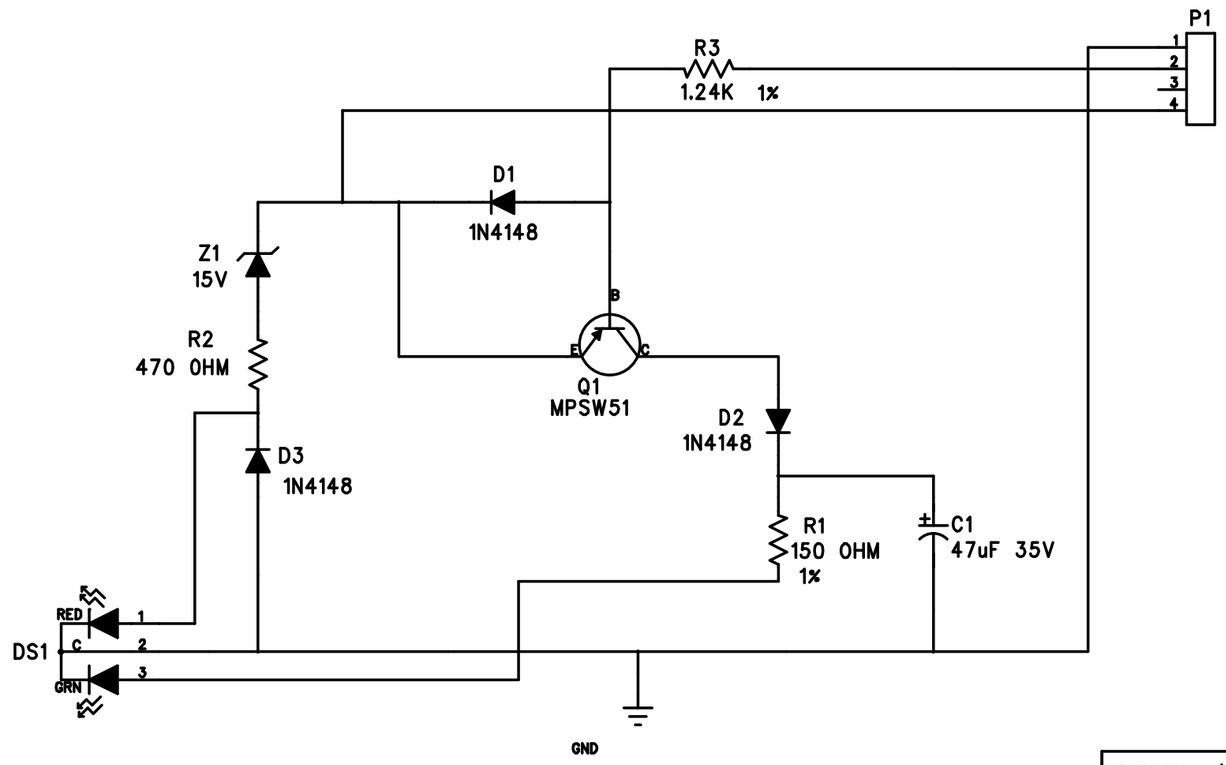

B	PER ECN NO. 6669	SLC	23OCT98
A	RELEASED, ECN #6432	JRB	19MAR98
REV.	DESCRIPTION	BY	DATE

DRAWN: JRB	DATED: 19MAR98
CHECKED:	DATED:
QUALITY CONTROL:	DATED:
RELEASED:	DATED:

COMPANY: INVIVO RESEARCH INC.
12601 RESEARCH PARKWAY, ORLANDO, FL 32826

TITLE: SCHEMATIC: AB123/B187
PCA, POWER/CHARGER LED, 3150

CODE:	SIZE:	DRAWING NO:	REV:
	B	C85B227	B

SCALE: NONE

SHEET: 1 OF 1

THIS DOCUMENT IS CONFIDENTIAL AND PROPRIETARY AND IS THE SOLE PROPERTY OF INVIVO RESEARCH INCORPORATED. IT IS NOT TO BE DISCLOSED TO ANY PARTY, REPRODUCED, OR USED IN ANY OTHER MANNER WITHOUT WRITTEN CONSENT OF SAID COMPANY. INVIVO MAINTAINS THE RIGHT TO CHANGE SPECIFICATIONS AT ANY TIME WITHOUT PRIOR NOTICE.

REV.	DESCRIPTION	BY	DATE
B	PER ECN NO. 8127	SLC	01DEC00
A	RELEASED, ECN NO. 7870	SLC	19JUL00
01	PROTOTYPE 01	SLC	27JUN00

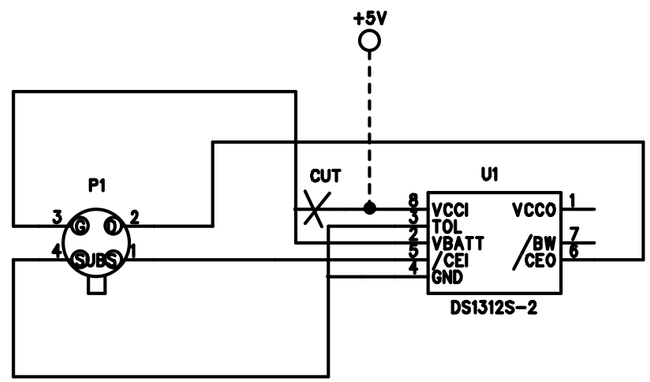

COMPANY: Invivo Research, Inc.
12601 Research Parkway, Orlando, FL 32826

TITLE: SCHEMATIC: AB153
PCA,NON-VOLATILE RAM CONTROLLER

DRAWN: SL CASTEL	DATED: 27JUN00		
CHECKED:	DATED:		
QUALITY CONTROL:	DATED:		
RELEASED:	DATED:		

BARE BOARD NO.	SIZE:	DRAWING NO:	REV:
B207	B	C85B250	B

SCALE: NONE

SHEET: 1 OF 1

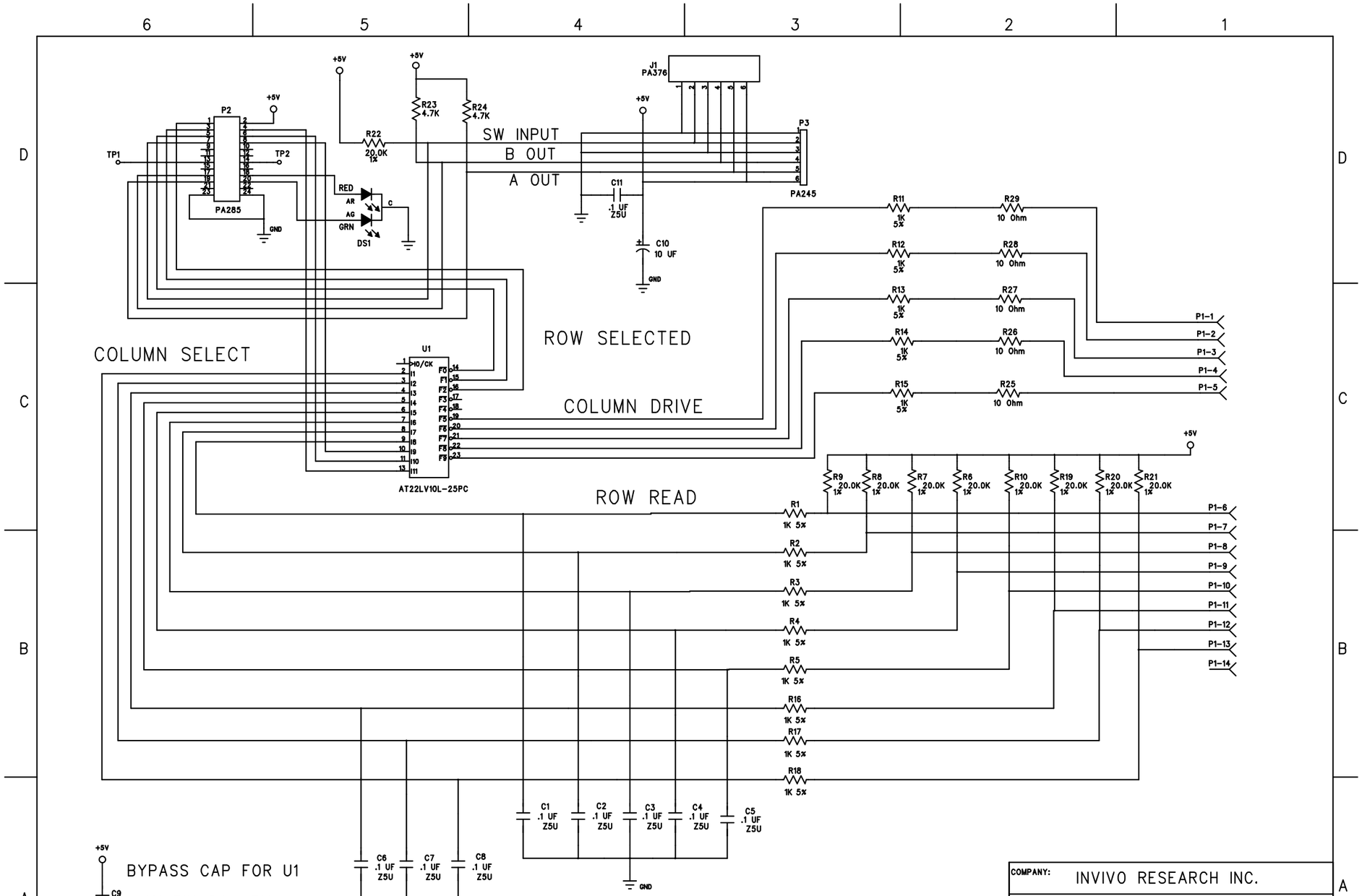

REV.	DESCRIPTION	BY	DATE
C	PER ECN #6451	JRB	12MAR98
B	PER ECN #4971M	SLC	14APR96
A	RELEASED ECN #4698	SLC	02JAN96
02	PROTOTYPE	SLN	15SEPT95
01	PROTOTYPE	CN	05APR95

DRAWN: CINDY NGUYEN DATED: 4/5/95
CHECKED: DATED:
QUALITY CONTROL: DATED:
RELEASED: DATED:

COMPANY: INVIVO RESEARCH INC.

TITLE: SCHEMATIC: AB68
PCA, KEYBOARD INTERFACE, 3500

CODE:	SIZE:	DRAWING NO:	REV:
	C	C85C186	C

SCALE: NONE SHEET: 1 OF 1

THIS DOCUMENT IS CONFIDENTIAL AND PROPRIETARY AND IS THE SOLE PROPERTY OF INVIVO RESEARCH INCORPORATED (IRI). IT IS NOT TO BE DISCLOSED TO ANY PARTY, REPRODUCED OR USED IN ANY OTHER MANNER WITHOUT WRITTEN CONSENT OF SAID COMPANY. INVIVO MAINTAINS THE RIGHT TO CHANGE ANY SPECIFICATIONS AT ANY TIME WITHOUT PRIOR NOTICE. DOC. NO. 10A008

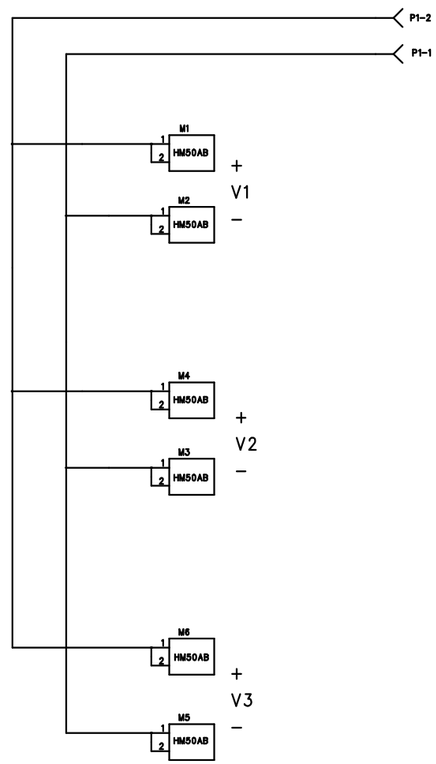

THIS DOCUMENT IS CONFIDENTIAL AND PROPRIETARY AND IS THE SOLE PROPERTY OF INVIVO RESEARCH INCORPORATED. IT IS NOT TO BE DISCLOSED TO ANY PARTY, REPRODUCED, OR USED IN ANY OTHER MANNER WITHOUT WRITTEN CONSENT OF SAID COMPANY. INVIVO MAINTAINS THE RIGHT TO CHANGE SPECIFICATIONS AT ANY TIME WITHOUT PRIOR NOTICE.

REV.	DESCRIPTION	BY	DATE
A	RELEASED, ECN#4793	JRB	2/7/96

DRAWN: R. BAKER	DATED: 2/6/96
CHECKED:	DATED:
QUALITY CONTROL:	DATED:
RELEASED:	DATED:

COMPANY: INVIVO RESEARCH, INC.
12601 RESEARCH PARKWAY, ORLANDO, FL 32826

TITLE: SCHEMATIC: AB72
PCA, POWER INTERCONNECT 3500

CODE:	SIZE:	DRAWING NO:	REV:
	C	C85C206	A

SCALE: NONE

SHEET: 1 OF 1

THIS DOCUMENT IS CONFIDENTIAL AND PROPRIETARY AND IS THE SOLE PROPERTY OF INVIVO RESEARCH INCORPORATED. IT IS NOT TO BE DISCLOSED TO ANY PARTY, REPRODUCED, OR USED IN ANY OTHER MANNER WITHOUT WRITTEN CONSENT OF SAID COMPANY. INVIVO MAINTAINS THE RIGHT TO CHANGE SPECIFICATIONS AT ANY TIME WITHOUT PRIOR NOTICE.

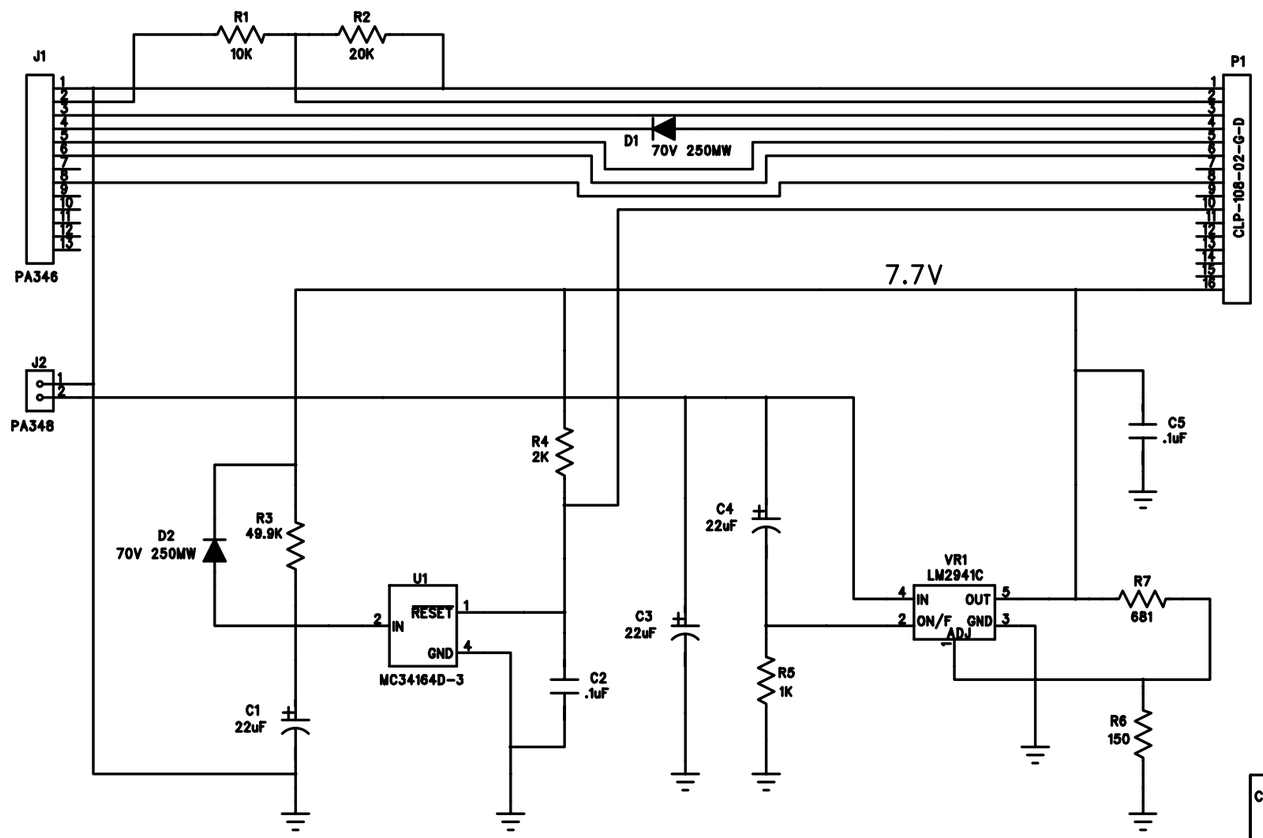

REV.	DESCRIPTION	BY	DATE
B	PER ECN #8579	JRB	22JAN02
A	RELEASED ECN 8394	SLC	06NOV01
01	PROTOTYPE 01	SLC	24SEP01

DRAWN: SL CASTEL	DATED: 24SEP01
CHECKED:	DATED:
QUALITY CONTROL:	DATED:
RELEASED:	DATED:

COMPANY: Invivo Research, Inc.
12601 Research Parkway Orlando, FL 32826

TITLE: SCHEMATIC: AB182
PCA, 2410 RADIO ADAPTER

BARE BOARD NO.	SIZE:	DRAWING NO:	REV:
B238	A	C85C283	B

SCALE: NONE

SHEET: 1 OF 1

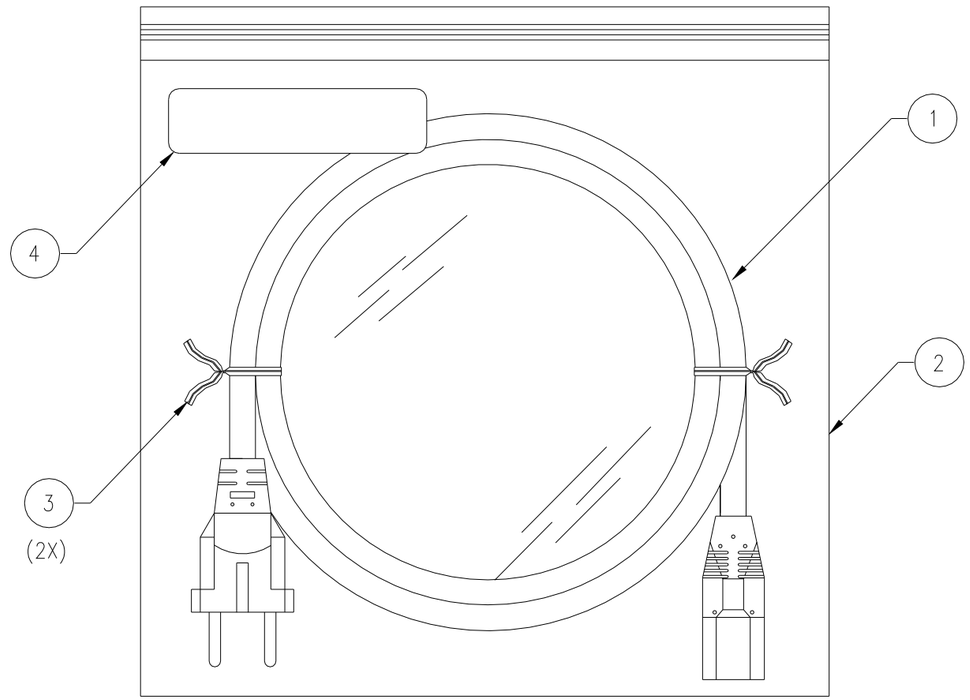

NOTE

1. APPLY TWIST TIES ON POWER CORD AS SHOWN.
2. PLACE LINE CORD IN PLASTIC BAG.
3. AFFIX IN-HOUSE COMPUTER PRINTED LABEL ON BAG AS SHOWN. LABEL TO BE PRINTED WITH THE FOLLOWING INFORMATION: "INVIVO RESEARCH INC.", PART NUMBER, DESCRIPTION, CURRENT REVISION LETTER, LOT NUMBER AND "MADE IN U.S.A."

ITEM / REF. DES.	PART NO.	QTY.	DESCRIPTION
4	———	1	LABEL, IN-HOUSE COMPUTER PRINTED
3	H065	2	TWIST TIE, PAPER WIRE, 6", WHITE
2	M001C	1	BAG, ZIPLOCK, 8" x 8" x 1.75 MIL.
1	HE39	1	LINE CORD, 10A/220-230V, EURO

REV.	DESCRIPTION	BY	DATE

UNLESS OTHERWISE SPECIFIED TOLERANCES ARE
.XX = ±
.XXX = ±
ANGLES = ±

DRAWN	SR	11/93
DESIGNED	SR	11/93
CHECKED		
APPROVED		

THIS DOCUMENT IS CONFIDENTIAL AND PROPRIETARY AND IS THE SOLE PROPERTY OF INVIVO RESEARCH INCORPORATED (IRI). IT IS NOT TO BE DISCLOSED TO ANY PARTY, REPRODUCED OR USED IN ANY OTHER MANNER WITHOUT WRITTEN CONSENT OF SAID COMPANY. INVIVO MANTAINS THE RIGHT TO CHANGE ANY SPECIFICATIONS AT ANY TIME WITHOUT PRIOR NOTICE.

DOC. NO. 10A006-B

DWGS. WITH 'C' PREFIX ARE REDUCED CAD DWGS. - DO NOT SCALE !

Invivo Research Inc.
PRECISION BIOMEDICAL INSTRUMENTS
12601 RESEARCH PARKWAY., ORLANDO, FL 32826

TITLE
SUB-ASSEMBLY: AS18G
LINE CORD, 10A/220-230V, EURO

SCALE	SHEET	DWG. NO.	REV.
NONE	1 OF 1	C94B639	0

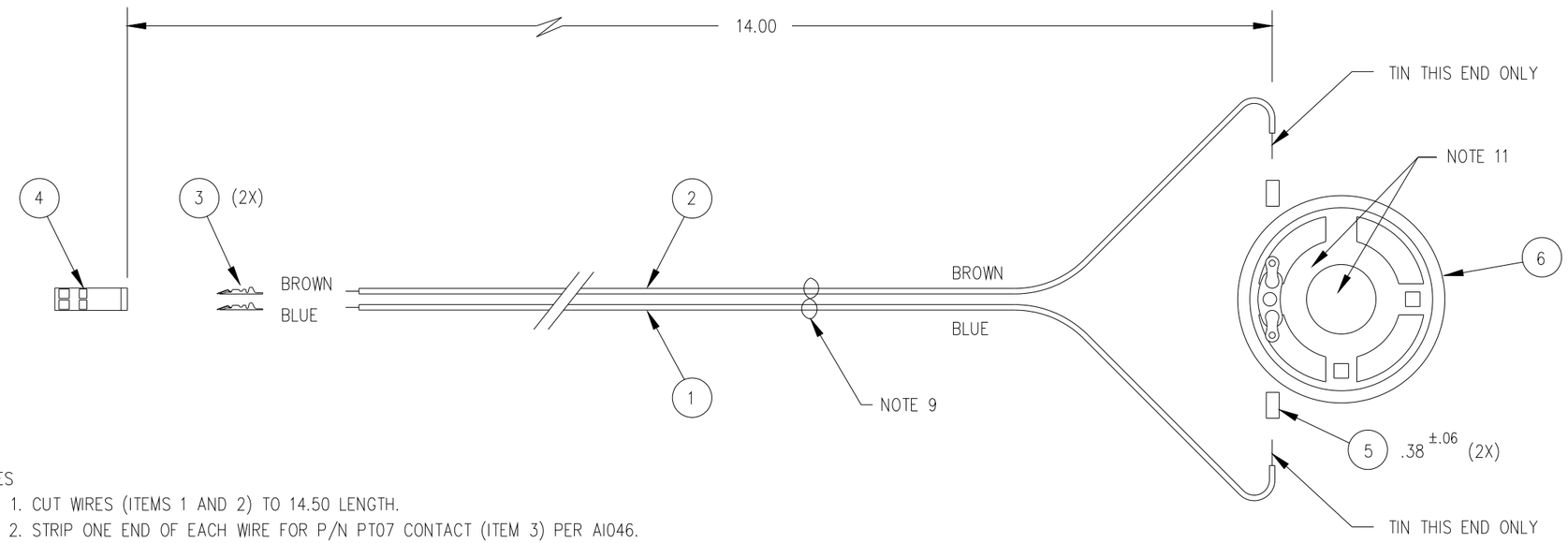

NOTES

1. CUT WIRES (ITEMS 1 AND 2) TO 14.50 LENGTH.
2. STRIP ONE END OF EACH WIRE FOR P/N PT07 CONTACT (ITEM 3) PER AI046.
3. STRIP AND TIN .250 ON OPPOSITE END OF EACH WIRE.
4. CRIMP P/N PT07 CONTACTS ONTO UNTINNED ENDS OF WIRES.
5. PLACE .38 ±.06 PIECE OF P/N WT01 HEAT SHRINK (ITEM 5) ONTO WIRES.
6. J-HOOK TINNED ENDS OF WIRES AND SOLDER TO TERMINALS OF P/N HE54 SPEAKER (ITEM 6).
7. ROUTE TO INSPECTION.
8. APPLY HEAT SHRINK OVER SOLDER JOINTS.
9. TWIST WIRES APPROXIMATELY ONE TO TWO TURNS PER INCH.
10. INSERT P/N PT07 CONTACTS INTO P/N PA21 HOUSING (ITEM 4).
11. PRINT ASSEMBLY NUMBER, REVISION, LOT NUMBER, AND ASSEMBLER INITIALS IN EITHER AREA NOTED
12. ROUTE TO INSPECTION

ITEM / REF. DES.	PART NO.	QTY.	DESCRIPTION
6	HE54	1	SPEAKER, LOW PROFILE, SAMARIUM COLBOLT MAGNET
5	WT01	.75	HEAT SHRINK, 1/8" ID BLACK
4	PA21	1	HOUSING, SR, 2 PIN (.10)
3	PT07	2	CONTACT, LOCKING CLIP, 26-22 AWG, REEL
2	W007	14.50	WIRE, 22 GAGE 19 X 34 BROWN UL-1429
1	W010	14.50	WIRE, 22 GAGE 19 X 34 BLUE UL-1429

REV.	DESCRIPTION	BY	DATE
E	PER ECN #8112	CHY	20NOV00

REV.	DESCRIPTION	BY	DATE
D	PER ECN #5703	CHY	29APR97
C	PER ECN #5143	CHY	7/8/96
B	PER ECN #4819	SR	2/14/96
A	RELEASE, ECN #4571	SR	10/13/95

THIS DOCUMENT IS CONFIDENTIAL AND PROPRIETARY AND IS THE SOLE PROPERTY OF INVIVO RESEARCH INCORPORATED (IRI). IT IS NOT TO BE DISCLOSED TO ANY PARTY, REPRODUCED OR USED IN ANY OTHER MANNER WITHOUT WRITTEN CONSENT OF SAID COMPANY. INVIVO RESEARCH INC. MAINTAINS THE RIGHT TO CHANGE SPECIFICATIONS AT ANY TIME WITHOUT PRIOR NOTICE.

UNLESS OTHERWISE SPECIFIED TOLERANCES ARE
.XX = ± .25
.XXX = ± .015
ANGLES = ± —

DRAWN	SR	10/4/95
DESIGNED	RS	9/28/95
CHECKED		
APPROVED		

INCHES — THIRD ANGLE PROJECTION

DO NOT SCALE THIS DRAWING !!!

Invivo Research Inc.
PRECISION BIOMEDICAL INSTRUMENTS
Subsidiary of Invivo Corporation
12601 RESEARCH PARKWAY., ORLANDO, FL 32826

TITLE: SUB-ASSEMBLY: AS137
ASSY, SPEAKER, 3500

CAD SCALE:	SHEET:	DWG. NO.:	REV.:
NONE	1 OF 1	C94B690	E

ECN5877

LF19 REV. A

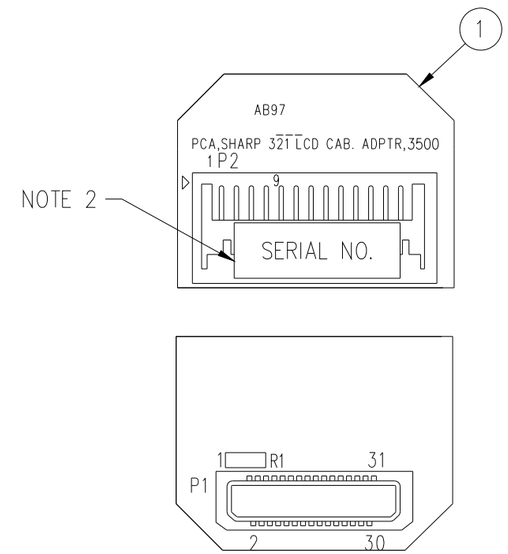

NOTES

1. WORKMANSHIP TO CONFORM TO IPC CLASS II REQUIREMENTS.
2. BOARD REQUIRES SERIALIZED LABELING WITH THE FOLLOWING INFORMATION:
   UNIQUE SERIAL NO., ASSEMBLY P/N & CURRENT REV. LEVEL.
   PLACE SERIAL NUMBER LABEL IN THIS AREA – ORIENT AS SHOWN.
3. NUMBER OF LAYERS: 2
4. CUT P2 LEADS FLUSH WITH PCB SURFACE TO .025 MAX. PROTRUSION.

ITEM / REF. DES.	PART NO.	QTY.	DESCRIPTION
R1	RX223	1	RES, 330 OHM, 5%, .1W, 0805
P2	PA290	1	CONN., 26P, DR, HDR, RA, SHRD, .079
P1	PA288	1	CONN., 31P, DR, RCPT, ST, SMT, .039
1	B160	1	PCB, SHARP 321 LCD DISPLAY CABLE ADPTR., 3500, REV. D

REV.	DESCRIPTION	BY	DATE
J	PER ECN #8299	CHY	19APR01
H	PER ECN #8010	SLC	26SEP00
G	PER ECN #7864	CHY	10JUL00
F	PER ECN #7692	CHY	28MAR00
E	PER ECN #7373	CHY	23SEP99
D	PER ECN #6798	CHY	24AUG98
C	PER ECN #6365	SLC	23JAN98
B	PER ECN #4989	JRB	23APR96
A	RELEASED, ECN #4878	SLC	28FEB96

THIS DOCUMENT IS CONFIDENTIAL AND PROPRIETARY AND IS THE SOLE PROPERTY OF INVIVO RESEARCH INCORPORATED (IRI). IT IS NOT TO BE DISCLOSED TO ANY PARTY, REPRODUCED OR USED IN ANY OTHER MANNER WITHOUT WRITTEN CONSENT OF SAID COMPANY. INVIVO RESEARCH INC. MAINTAINS THE RIGHT TO CHANGE SPECIFICATIONS AT ANY TIME WITHOUT PRIOR NOTICE.

UNLESS OTHERWISE SPECIFIED TOLERANCES ARE
.XX = ±
.XXX = ±
ANGLES = ±

DRAWN	SLC	28FEB96
DESIGNED	SLC	15FEB95
CHECKED		
APPROVED		

INCHES — THIRD ANGLE PROJECTION

DO NOT SCALE THIS DRAWING !!!

Invivo Research Inc.
PRECISION BIOMEDICAL INSTRUMENTS
Subsidiary of Invivo Corporation
12601 RESEARCH PARKWAY., ORLANDO, FL 32826

TITLE:
ASSEMBLY: AB97
PCA, SHARP 321 LCD DISPLAY, CABLE ADAPTER, 3500

CAD SCALE:	SHEET:	DWG. NO.:	REV.:
2 : 1	1 OF 1	C94B711	J

ECN5877

LF19 REV. A

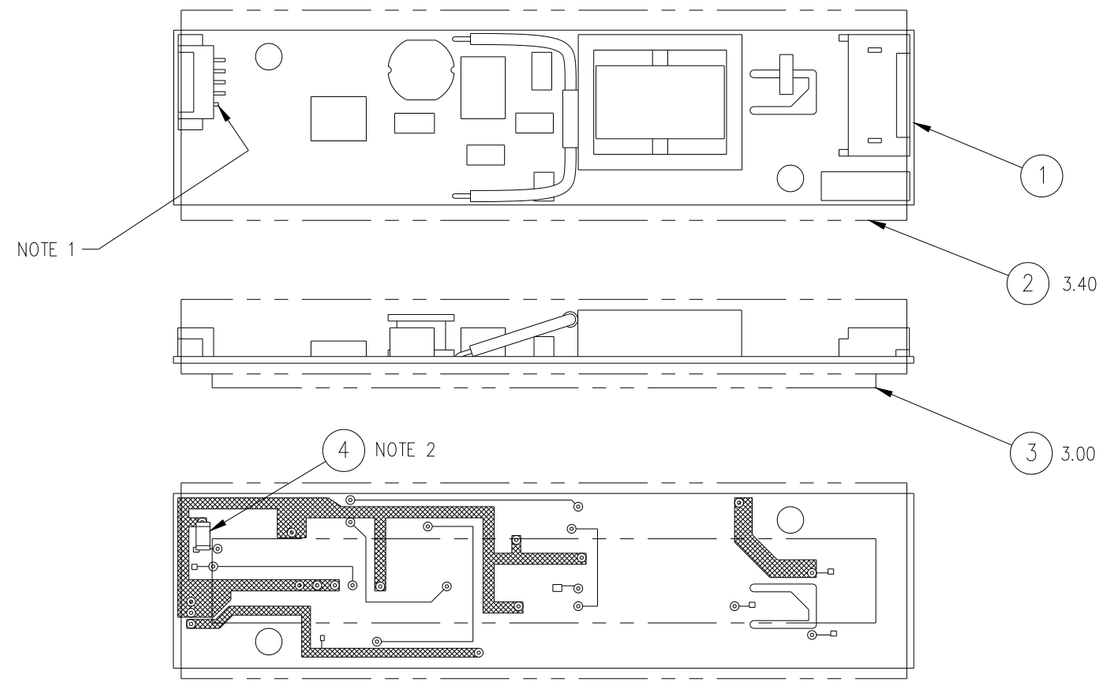

NOTES

1. CUT AND DESOLDER PIN 5 OF CN1.
2. SOLDERSIDE, ADD P/N RX120 RESISTOR (ITEM 4) TO UNUSED COMPONENT LOCATION AS SHOWN.
3. ROUTE TO INSPECTION.
4. APPLY & SHRINK APPROXIMATELY 3.40 LENGTH OF P/N WT28 HEAT SHRINK (ITEM 2) OVER P/N AB09 PCA (ITEM 1) AS SHOWN. AVOID EXCESSIVE HEAT.
5. CENTER P/N M000, FOAM TAPE (ITEM 3) ON BOTTOM OF ASSEMBLY AS SHOWN (DO NOT REMOVE BACKING).
6. PRINT LOT NUMBER, ASSEMBLY NUMBER, AND REVISION ON TOP OF ASSEMBLY USING PERMANENT MARKER IN CONTRASTING COLOR.
7. ROUTE TO INSPECTION.

ITEM / REF. DES.	PART NO.	QTY.	DESCRIPTION
4	RX120	1	RES., 3.92K, .125W, 1%, 200V, 100 PPM, 1206
3	M000	3.00	TAPE, OPEN CELL FOAM, DS, .06 THK. x .38 WD.
2	WT28	3.40	HEAT SHRINK, 3/4" I.D., BLACK, LOW TEMP.
1	AB09	1	PCA, INVERTER, LCD

REV.	DESCRIPTION	BY	DATE
D	PER ECN #7505	CHY	10DEC99
C	PER ECN #7478	CHY	10DEC99
B	PER ECN #5712	KCO	7MAY97
A	RELEASED, ECN #5026	CHY	6/6/96

THIS DOCUMENT IS CONFIDENTIAL AND PROPRIETARY AND IS THE SOLE PROPERTY OF INVIVO RESEARCH INCORPORATED (IRI). IT IS NOT TO BE DISCLOSED TO ANY PARTY, REPRODUCED OR USED IN ANY OTHER MANNER WITHOUT WRITTEN CONSENT OF SAID COMPANY. INVIVO RESEARCH INC. MAINTAINS THE RIGHT TO CHANGE SPECIFICATIONS AT ANY TIME WITHOUT PRIOR NOTICE.

UNLESS OTHERWISE SPECIFIED TOLERANCES ARE
.XX = ± .10
.XXX = ± ——
ANGLES = ± ——

DRAWN	CHY	6/6/96
DESIGNED	DM	5/7/96
CHECKED		
APPROVED		

INCHES — THIRD ANGLE PROJECTION

DO NOT SCALE THIS DRAWING !!!

Invivo Research Inc.
PRECISION BIOMEDICAL INSTRUMENTS
Subsidiary of Invivo Corporation
12601 RESEARCH PARKWAY., ORLANDO, FL 32826

TITLE: ASSEMBLY: AB09A
PCA, LCD INVERTER w/HEAT SHRINK

CAD SCALE:	SHEET:	DWG. NO.:	REV.:
2 : 1	1 OF 1	C94B719	D

ECN5877

LF19 REV. A

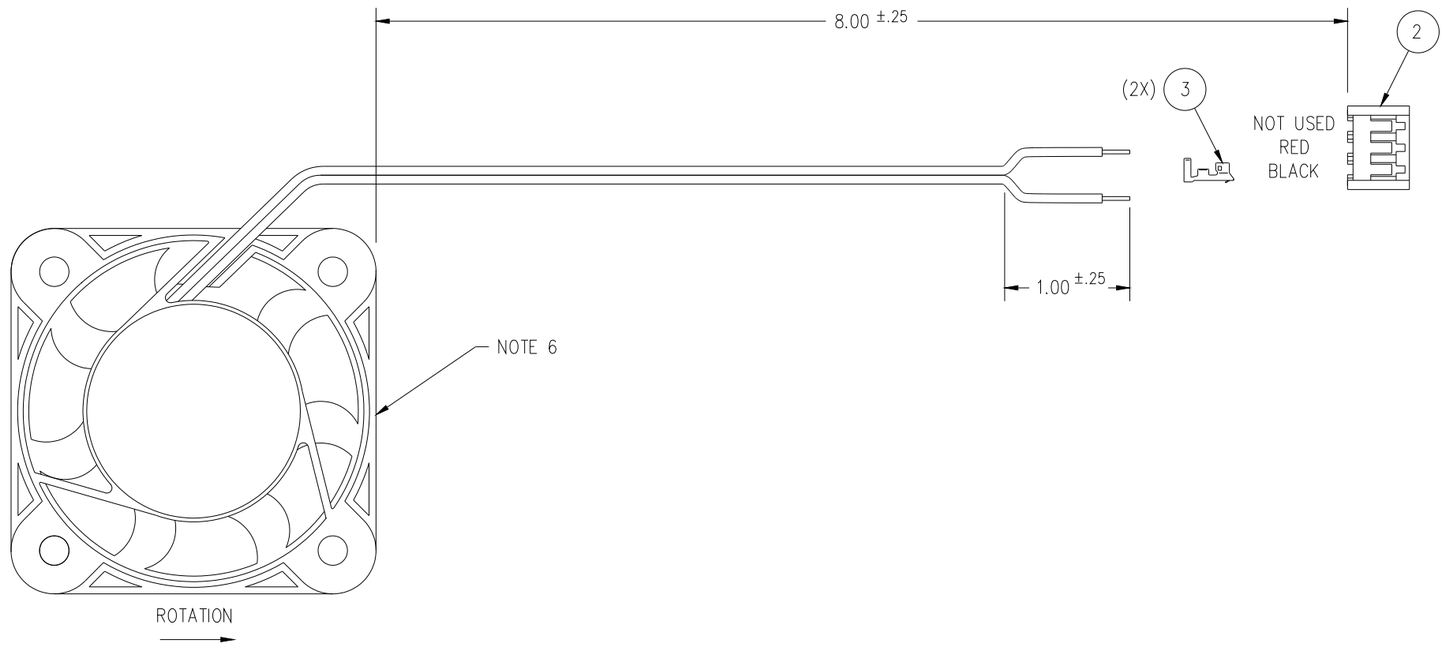

NOTES:

1. CUT P/N HF04, FAN WIRES (ITEM 1) TO 8.00 LENGTH AS SHOWN.
2. SPLIT WIRES TO DIMENSION SHOWN AND STRIP WIRES FOR P/N PT33 CONTACT (ITEM 3) PER AI046.
3. CRIMP P/N PT33, TERMINALS (ITEM 3) ONTO THE WIRE ENDS.
4. ROUTE TO INSPECTION.
5. INSERT TERMINALS INTO P/N PA249A, HOUSING (ITEM 2) AS SHOWN.
6. USING PRINTED LABEL OR INDELIBLE INK IN CONTRASTING COLOR, PRINT ASSEMBLY NUMBER, REVISION, LOT NUMBER AND ASSEMBLER INITIALS ON SIDE OF FAN.
7. ROUTE TO INSPECTION.

ITEM / REF. DES.	PART NO.	QTY.	DESCRIPTION
3	PT33	2	CONTACT, CRIMP SOCKET, #22-#30 AWG
2	PA249A	1	CONN, 3P, SR, HSG, ST, .098 CTRS
1	HF04	1	FAN, 12V, DC, BRUSHLESS, 5.3 CFM, 40MM

REV.	DESCRIPTION	BY	DATE
D	PER ECN #6137	CHY	10NOV97
C	PER ECN #5701	CHY	28APR97
B	PER ECN #5563	CHY	11FEB97
A	RELEASED, ECN #5320	SR	10DEC96

REV.	DESCRIPTION	BY	DATE
F	PER ECN #7886	KCO	24JUL00
E	PER ECN #7747	CHY	20APR00

UNLESS OTHERWISE SPECIFIED TOLERANCES ARE
.XX = ± .12
.XXX = ± .062
ANGLES = ± ——

DRAWN	SR	22NOV96
DESIGNED	SR	22NOV96
CHECKED		
APPROVED		

INCHES — THIRD ANGLE PROJECTION

DO NOT SCALE THIS DRAWING !!!

THIS DOCUMENT IS CONFIDENTIAL AND PROPRIETARY AND IS THE SOLE PROPERTY OF INVIVO RESEARCH INCORPORATED (IRI). IT IS NOT TO BE DISCLOSED TO ANY PARTY, REPRODUCED OR USED IN ANY OTHER MANNER WITHOUT WRITTEN CONSENT OF SAID COMPANY. INVIVO MAINTAINS THE RIGHT TO CHANGE SPECIFICATIONS AT ANY TIME WITHOUT PRIOR NOTICE.

Invivo Research Inc.
PRECISION BIOMEDICAL INSTRUMENTS
12601 RESEARCH PARKWAY, ORLANDO, FL 32826

TITLE
ASSY: AS141
FAN, EXHAUST, 3I55MVS

CAD SCALE	SHEET	DWG. NO.	REV.
NONE	1 OF 1	C94B739	F

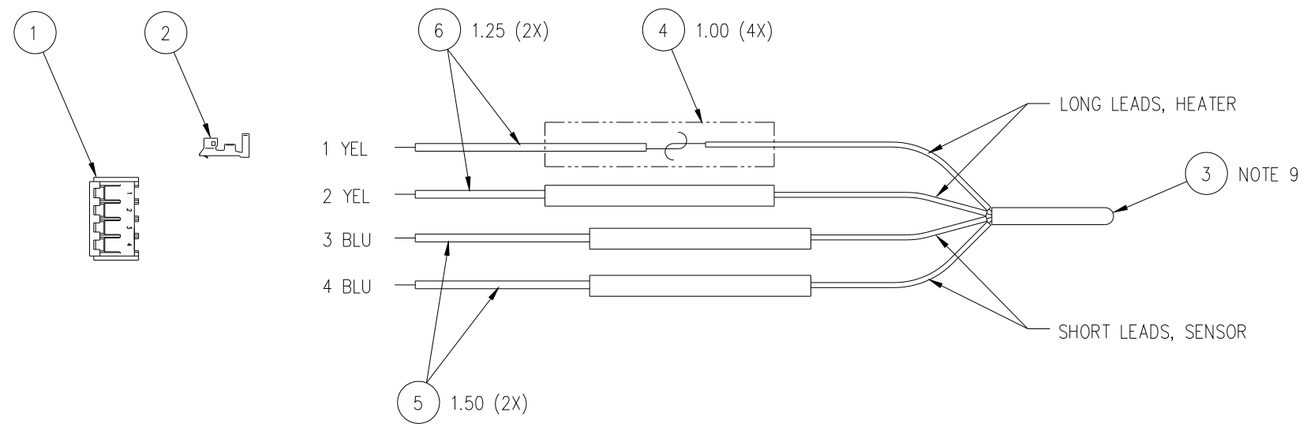

NOTES

1. CUT TWO P/N W076 WIRES (ITEM 5) TO 1.50 LONG.
2. CUT TWO P/N W078 WIRES (ITEM 6) TO 1.25 LONG.
3. STRIP & TIN ONE END OF EACH WIRE .25.
4. STRIP OPPOSITE END OF WIRES FOR P/N PT33 TERMINAL (ITEM 2) PER AI046.
5. CRIMP TERMINALS ONTO WIRES.
6. ROUTE TO INSPECTION.
7. INSERT TERMINALS INTO P/N PA369A CONNECTOR (ITEM 1).
8. ROUTE TO INSPECTION.
9. P/N RH001 HEATER (ITEM 3) IS A SENSITIVE PART. DO NOT ALLOW COMPONENT BODY TO CONTACT BARE SKIN. USE PROTECTIVE GLOVES WHEN HANDLING.
10. SLIDE 1.00 PIECE OF P/N WT04 HEAT SHRINK (ITEM 4) ONTO WIRES.
11. TIN THE HEATER LEADS. J-HOOK THE WIRES AND LEADS TOGETHER AS SHOWN, AND SOLDER.
12. ROUTE TO INSPECTION.
13. APPLY THE HEAT SHRINK OVER THE SOLDER JOINTS.
14. ROUTE TO INSPECTION.

ITEM / REF. DES.	PART NO.	QTY.	DESCRIPTION
6	W078	2.50	WIRE, 28 GA, 7/36, YEL, UL-1429
5	W076	3.00	WIRE, 28 GA, 7/36, BLU, UL-1429
4	WT04	4.00	HEAT SHRINK, 3/32 ID, BLACK
3	RH001	1	HEATER, DUAL ELEMENT, WIREBOUND
2	PT33	4	CONTACT, CRIMP SOCKET, 22-30 AWG
1	PA369A	1	CONN, 4P, SR. HSG, .098 CTRS.

REV.	DESCRIPTION	BY	DATE
C	PER ECN #7866	CHY	5JUL00
B	PER ECN #7155	CHY	23APR99
A	RELEASED, ECN #6800	CHY	18DEC98

THIS DOCUMENT IS CONFIDENTIAL AND PROPRIETARY AND IS THE SOLE PROPERTY OF INVIVO RESEARCH INCORPORATED (IRI). IT IS NOT TO BE DISCLOSED TO ANY PARTY, REPRODUCED OR USED IN ANY OTHER MANNER WITHOUT WRITTEN CONSENT OF SAID COMPANY. INVIVO RESEARCH INC. MAINTAINS THE RIGHT TO CHANGE SPECIFICATIONS AT ANY TIME WITHOUT PRIOR NOTICE.

UNLESS OTHERWISE SPECIFIED TOLERANCES ARE
.XX = ± .02
.XXX = ± .010
ANGLES = ± 1°

DRAWN	SR	14DEC98
DESIGNED	DM	24SEP98
CHECKED		
APPROVED		

INCHES — THIRD ANGLE PROJECTION

DO NOT SCALE THIS DRAWING !!!

Invivo Research Inc.
PRECISION BIOMEDICAL INSTRUMENTS
Subsidiary of Invivo Corporation
12601 RESEARCH PARKWAY., ORLANDO, FL 32826

TITLE:
ASSEMBLY: AS162
ASSEMBLY, HEATER, AGENT ANALYZER

CAD SCALE:	SHEET:	DWG. NO.:	REV.:
1 : 1	1 of 1	C94B828	C

ECN5877

LF19 REV. A

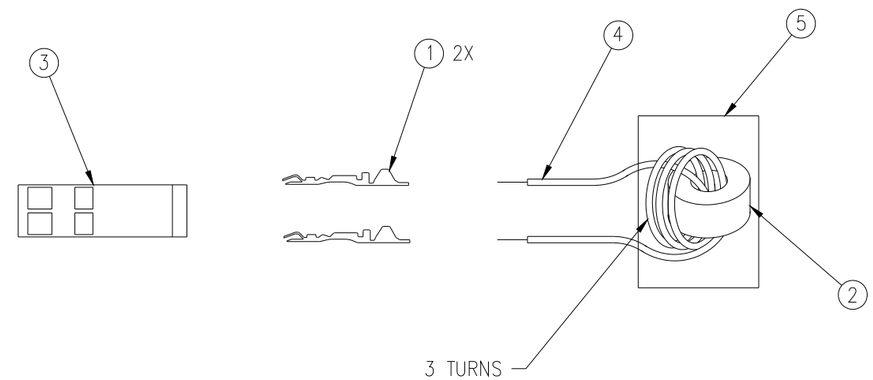

NOTES

1. CUT P/N W038 WIRE (ITEM 4) TO 3.75.
2. STRIP ENDS FOR P/N PT07B CONNECTOR (ITEM 1) PER AI046.
3. ROUTE TO INSPECTION.
4. CRIMP PT07B ON WIRE ENDS.
5. LOOP WIRE 3 TIMES THRU P/N T023 BEAD (ITEM 2).
6. INSERT TERMINATED WIRE INTO P/N PA21 HOUSING (ITEM 3).
7. APPLY P/N WT19 HEAT SHRINK (ITEM 5) AS SHOWN.
8. ROUTE TO INSPECTION.

ITEM / REF. DES.	PART NO.	QTY.	DESCRIPTION
5	WT19	.5	HEAT SHRINK, 3/8 IN. ID, NEOPRENE
4	W038	3.75	WIRE, 26 GAGE 19 X 38 RED UL-1429
3	PA21	1	HOUSING, SR, 2 PIN, (.10)
2	T023	1	SHIELDING BEAD 2643002402
1	PT07B	2	CNTCT, LKG. CLP, 26-22 AWG, GOLD, ST

REV.	DESCRIPTION	BY	DATE
A	RELEASED, ECN #7244	KCO	21JUL99

UNLESS OTHERWISE SPECIFIED TOLERANCES ARE
.XX = ± ——
.XXX = ± ——
ANGLES = ± ——

DRAWN	KCO	21JUL99
DESIGNED	DS	29JUN99
CHECKED		
APPROVED		

INCHES

THIRD ANGLE PROJECTION

DO NOT SCALE THIS DRAWING !!!

THIS DOCUMENT IS CONFIDENTIAL AND PROPRIETARY AND IS THE SOLE PROPERTY OF INVIVO RESEARCH INCORPORATED (IRI). IT IS NOT TO BE DISCLOSED TO ANY PARTY, REPRODUCED OR USED IN ANY OTHER MANNER WITHOUT WRITTEN CONSENT OF SAID COMPANY. INVIVO RESEARCH INC. MAINTAINS THE RIGHT TO CHANGE SPECIFICATIONS AT ANY TIME WITHOUT PRIOR NOTICE.

Invivo Research Inc.
PRECISION BIOMEDICAL INSTRUMENTS
Subsidiary of Invivo Corporation
12601 RESEARCH PARKWAY., ORLANDO, FL 32826

TITLE: ASSEMBLY: AS167
NOISE FILTER, FERRITE BEAD

CAD SCALE:	SHEET:	DWG. NO.:	REV.:
1 : 1	1 of 1	C94B850	A

NOTES:

1. CUT P/N W069 BLACK 28GA. WIRE (ITEM 7) TO 7.28 LONG & P/N W073 RED 28GA. WIRE (ITEM 8) TO TO 7.13 LONG. STRIP .06 ON ONE END & .25 ON THE OTHER END. TIN .25 END ONLY.
2. INSERT WIRES THROUGH HOLE IN P/N HM50CA ADAPTER (ITEM 2) .06 STRIPPED END FIRST AS SHOWN.
3. SOLDER .06 ENDS TO P/N B198 SENSOR ADAPTER PCB (ITEM 1). BLACK WIRE GOES TO INNER RING (NEGATIVE) ON PCB & RED WIRE GOES TO OUTER RING (POSITIVE) ON PCB. TRIM SOLDER TAILS ON WIRES TO WITHIN .04 FROM SURFACE ON PCB. NO SHARP EDGES/JOINTS ALLOWED ON OUTER GOLD RINGS OF PCB. GOLD RINGS OF B198 SENSOR ADAPTER PCB ARE TO FACE AWAY FROM P/N HM50CA ADAPTER.
4. ROUTE TO INSPECTION.
5. APPLY P/N M207 LOCTITE PRIMER (ITEM 12) TO BOTH MATING SURFACES OF HM50CA ADAPTER & B198 PC BOARD. ALLOW TO DRY.
6. APPLY (2) SMALL DROPS OF P/N M206 LOCTITE 401 ADHESIVE (ITEM 11) TO PRIMED, INNER SURFACE OF B198 PC BOARD & ASSEMBLE TO HM50CA ADAPTER. ALLOW ADHESIVE TO CURE.
7. FILL WIRE HOLE ON EXIT END END OF HM50CA ADAPTER W/WIRES USING P/N M008B BLACK RTV (ITEM 10). DISPENSE SEALANT USING SYRINGE SO AS TO MINIMIZE OVERFLOW & SMEARING OF RTV. ALLOW TO CURE.
8. TWIST WIRES 1 – 2 TURNS PER INCH.
9. CUT HEAT SHRINK TUBING P/N WT04 (ITEM 9) 4.75 LONG.
10. INSERT WIRES THROUGH WT04 TUBING & SLIDE P/N PA409 PLUG (ITEM 5) COVER OVER TUBING.
11. J-HOOK & SOLDER BOTH WIRES TO PA409 PLUG BODY. BLACK WIRE GOES TO CENTER LUG & RED WIRE GOES TO OUTER SHIELD ON PLUG BODY.
12. IF THIS ASSEMBLY IS MADE OR REPAIRED USING NO-CLEAN SOLDER, ALL FLUX RESIDUE MUST BE THOROUGHLY REMOVED USING AN APPROPRIATE FLUX CLEANER.
13. ROUTE TO INSPECTION.
14. CRIMP PA409 STRAIN RELIEF TABS OVER BOTH WIRES AND HEAT SHRINK TUBING. ENSURE CRIMP IS ON TOP OF AND RESTRAINING HEAT SHRINK TUBING, NOT ON TOP OF WIRES.
15. SHRINK TUBING IN PLACE.
16. SCREW PA409 PLUG COVER TO PA409 PLUG BODY.
17. DISPENSE P/N M008B BLACK RTV INTO TOP OF P/N PA409 PLUG COVER TO RETAIN CABLE. MINIMIZE OVERFLOW AND ALLOW TO CURE.
18. ASSEMBLE P/N HP128 FEMALE LUER (ITEM 4) TO HM50CA ADAPTER. USE P/N M202 ADHESIVE (ITEM 15) ON HP128 THREADS.
19. ASSEMBLE P/N HP99 O-RING (ITEM 3) TO HM50CA ADAPTER.
20. APPLY P/N L214 9461 ID LABEL (ITEM 6) TO BOTTOM OF HM50CA ADAPTER.
21. PLACE ENTIRE ASSEMBLY INTO P/N M001B ZIPLOCK BAG (ITEM 14), AND ADD P/N L131 ID LABEL (ITEM 13) TO OUTSIDE OF BAG.
22. ROUTE TO INSPECTION.

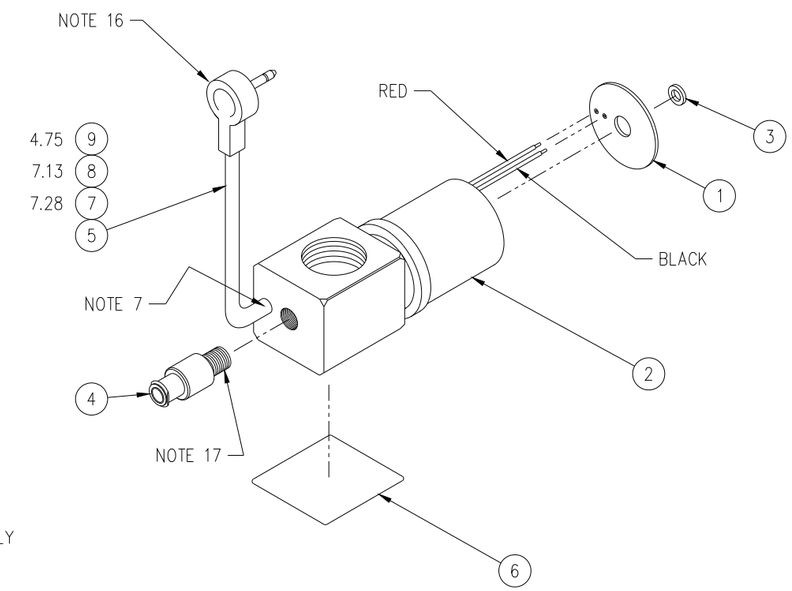

	ITEM / REF. DES.	PART NO.	QTY.	DESCRIPTION
	15	M202	A/R	ADHESIVE, (BLACK) LOCTITE 410
(NOT SHOWN)	14	M001B	1	BAG, ZIPLOCK, 6 X 6 X 1.15 MIL
	13	L131	REF	LABEL, ID, COMPUTER PRINTED
	12	M207	REF	PRIMER, LOCTITE 770
	11	M206	REF	ADHESIVE, LOCTITE 401
	10	M008B	REF	ADHESIVE/SEALANT, RTV, BLACK, 732
	9	WT04	4.75	HEAT SHRINK TUBING, 3/32" ID, BLACK
	8	W073	7.13	WIRE, 28 GA., 7/36, RED, UL-1429
	7	W069	7.28	WIRE, 28 GA., 7/36, BLACK, UL-1429
	6	L214	1	LABEL, KIT, ANESTH. O2 SENSOR, 9461
	5	PA409	1	PLUG, 3.5mm, MONO, PHONO
	4	HP128	1	LUER, FEMALE, #1/4-28 THD.
	3	HP99	1	O-RING, .087 ID X .070 CS, TFLN/BUNA-N
	2	HM50CA	1	ADAPTER, ANESTHETIC O2 SENSOR, 3500
	1	B198	1	PCB, ANESTHETIC O2 SENSOR ADAPTER

REV.	DESCRIPTION	BY	DATE
D	PER ECN #7804	KCO	18SEP00
C	PER ECN #7949	CHY	30AUG00
B	PER ECN #7349	CHY	10OCT99
A	RELEASED, ECN #7308	KCO	5AUG99
E	PER ECN #8400	CHY	9AUG01

THIS DOCUMENT IS CONFIDENTIAL AND PROPRIETARY AND IS THE SOLE PROPERTY OF INVIVO RESEARCH INCORPORATED (IRI). IT IS NOT TO BE DISCLOSED TO ANY PARTY, REPRODUCED OR USED IN ANY OTHER MANNER WITHOUT WRITTEN CONSENT OF SAID COMPANY. INVIVO MAINTAINS THE RIGHT TO CHANGE SPECIFICATIONS AT ANY TIME WITHOUT PRIOR NOTICE.

UNLESS OTHERWISE SPECIFIED TOLERANCES ARE
.XX = ± .06
.XXX = ± ——
ANGLES = ± ——

DRAWN	KCO	3AUG99
DESIGNED	RLM	27JUL99
CHECKED		
APPROVED		

INCHES — THIRD ANGLE PROJECTION

DO NOT SCALE THIS DRAWING !!!

INVIVO RESEARCH, INC.
12601 RESEARCH PARKWAY., ORLANDO, FL 32826

TITLE: SUB ASSEMBLY: AS168
ADAPTER, ANESTH. O2 SENSOR, 3500

CAD SCALE	SHEET	DWG. NO.	REV.
NONE	1 of 1	C94B852	E

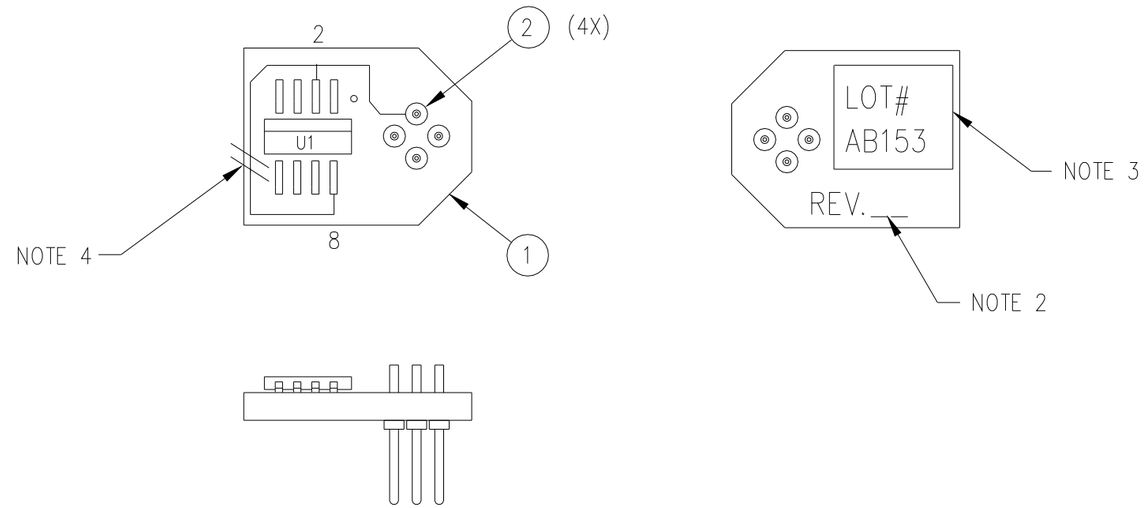

NOTES

1. WORKMANSHIP TO CONFORM TO IPC CLASS II REQUIREMENTS.
2. USING INDELIBLE INK IN CONTRASTING COLOR, PRINT CURRENT ASSEMBLY REV. IN SPACE PROVIDED.
3. PLACE SMALL LABEL WITH LOT NUMBER AND BOARD ASSEMBLY NUMBER ON SOLDER SIDE AS SHOWN.
4. CUT TRACE BETWEEN U1-2 AND U1-8.

ITEM / REF. DES.	PART NO.	QTY.	DESCRIPTION
2	P038	4	PIN, PRINTED CIRCUIT BOARD, MACHINED
U1	ICX89	1	IC, NONVOLATILE RAM CNTRLR, DS1312, S08
1	B207	1	PCB, NONVOLATILE RAM ADAPTER REV. A

REV.	DESCRIPTION	BY	DATE
B	PER ECN #8127	SR	1DEC00
A	RELEASED, ECN #7870	SLC	18JUL00
01	RELEASED FOR PROTOTYPE	SLC	30JUN00

THIS DOCUMENT IS CONFIDENTIAL AND PROPRIETARY AND IS THE SOLE PROPERTY OF INVIVO RESEARCH INCORPORATED (IRI). IT IS NOT TO BE DISCLOSED TO ANY PARTY, REPRODUCED OR USED IN ANY OTHER MANNER WITHOUT WRITTEN CONSENT OF SAID COMPANY. INVIVO RESEARCH INC. MAINTAINS THE RIGHT TO CHANGE SPECIFICATIONS AT ANY TIME WITHOUT PRIOR NOTICE.

UNLESS OTHERWISE SPECIFIED TOLERANCES ARE
.XX = ± .02
.XXX = ± .010
ANGLES = ± 1°

DRAWN	SLC	30JUN00
DESIGNED	SLC	30JUN00
CHECKED		
APPROVED		

INCHES

THIRD ANGLE PROJECTION

DO NOT SCALE THIS DRAWING !!!

Invivo Research Inc.
PRECISION BIOMEDICAL INSTRUMENTS
Subsidiary of Invivo Corporation
12601 RESEARCH PARKWAY., ORLANDO, FL 32826

TITLE: ASSEMBLY: AB153
PCA, NONVOLATILE RAM ADPTR, 3500

CAD SCALE:	SHEET:	DWG. NO.:	REV.:
1 : 1	1 of 1	C94B883	B

ECN5877

LF19 REV. A

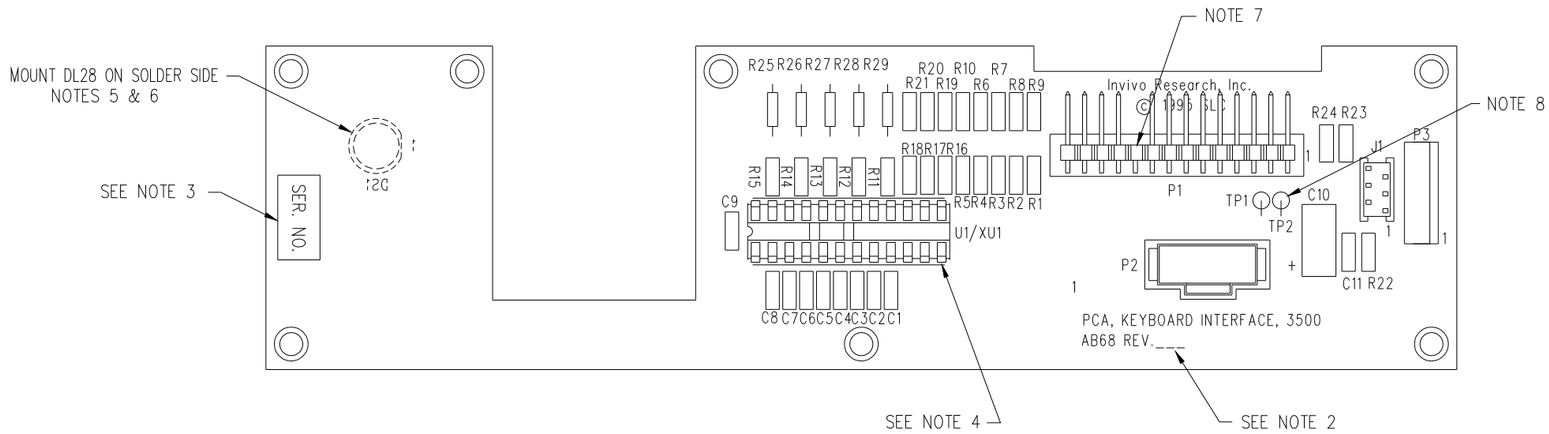

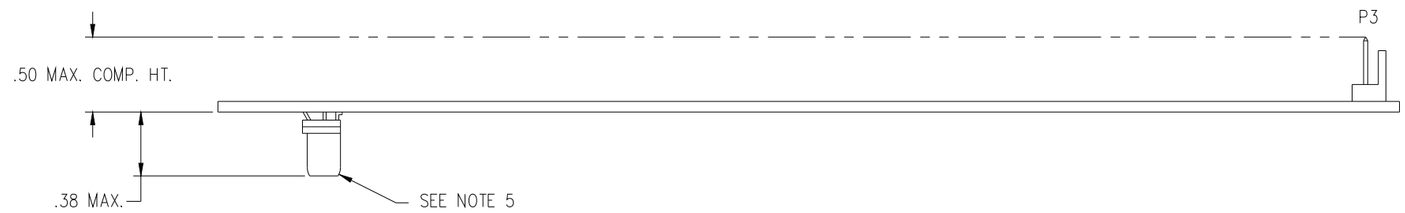

NOTES

1. WORKMANSHIP TO CONFORM TO IPC CLASS II REQUIREMENTS
2. USING INDELIBLE INK IN CONTRASTING COLOR, PLACE CURRENT ASSEMBLY REV. IN SPACE PROVIDED
3. BOARD REQUIRES SERIALIZED LABELING WITH THE FOLLOWING INFORMATION: UNIQUE SERIAL NO., ASSEMBLY P/N & CURRENT REV. LEVEL. PLACE SERIAL NUMBER LABEL IN THIS AREA–ORIENT AS SHOWN.
4. U1 (AM40) TO BE INSTALLED AT FINAL ASSEMBLY.
5. CAREFULLY MODIFY DL28 BY GRINDING, FILING, ETC. TO DIMENSION SHOWN WHEN SOLDERED ON BOARD
6. CHECK FOR CONTINUITY BETWEEN DS1–P1 AND CENTER PIN AFTER DL28 HAS BEEN SOLDERED IN PLACE. THERE SHOULD BE NO CONNECTION
7. CUT PIN 10 FLUSH WITH CONNECTOR ON P1
8. BEND TO 45° IN DIRECTION SHOWN

NOTE 4

ITEM / REF. DES.	PART NO.	QTY.	DESCRIPTION
J1	PA376	1	CONN, 6P, RCPT, MICRO–MATCH, .050
XU1	P030	1	SOCKET, 24 PIN DIP, .300 CTRS.
TP1,TP2	PA00	2	HEADER, UNSH, SR, 1 PIN (.10)
R25–29	R051	5	RES, 10 OHM, 5%, .25W, CF
R23,24	RX08	2	RES, 4.7K, .125W, 5%
R6–10, 19–22	RX58	9	RES, 20K, ±1%, .125W, SMD, 1206
R1–5, 11–18	RX23	13	RES, 1K, ±5%, .125W, 200 PPM, CHIP
P3	PA245	1	CONN, 6P, SR, HDR, ST, .100 CTRS
P2	PA285	1	CONN, 24P, DR. HDR., SHRD, .050 CTRS.
P1	PA246	1	CONN, 14P, SR, HDR, RA, (.100 CTRS)
DS1	DL28	1	LED, BI–COLOR, NEW RED/GREEN, T1.75
C10	CXT05	1	CAP, 10uF, 20%, 35V, SIZE D, TANT.
C1–9,11	CX07	10	CAP, 1uf, 20%, 50V, Z5U, CHIP, CER.
1	B144	1	PCB, KEYBRD. INTRFC., 3500 REV. C

REV.	DESCRIPTION	BY	DATE
B	PER ECN #4800	CHY	3/7/96
A	RELEASED, ECN #4698	SLC	12/20/95
02	PROTOTYPE REVISION	SR	9/25/95
01	PROTOTYPE REVISION	CHY	6/16/94

REV.	DESCRIPTION	BY	DATE
G	PER ECN #6606	JWT	10JUN98
F	PER ECN #6451	JRB	13MAR98
E	PER ECN #5227	CHY	14AUG96

THIS DOCUMENT IS CONFIDENTIAL AND PROPRIETARY AND IS THE SOLE PROPERTY OF INVIVO RESEARCH INCORPORATED (IRI). IT IS NOT TO BE DISCLOSED TO ANY PARTY, REPRODUCED OR USED IN ANY OTHER MANNER WITHOUT WRITTEN CONSENT OF SAID COMPANY. INVIVO MAINTAINS THE RIGHT TO CHANGE SPECIFICATIONS AT ANY TIME WITHOUT PRIOR NOTICE.

UNLESS OTHERWISE SPECIFIED TOLERANCES ARE
.xx = ± ___
.xxx = ± ___
ANGLES = ± ___

DRAWN	SR	12/20/95
DESIGNED	CN	6/16/94
CHECKED		
APPROVED		

INCHES — THIRD ANGLE PROJECTION

DO NOT SCALE THIS DRAWING !!!

Invivo Research Inc.
PRECISION BIOMEDICAL INSTRUMENTS
12601 RESEARCH PARKWAY, ORLANDO, FL 32826

TITLE
ASSEMBLY: AB68
PCA, KEYBRD. INTRFC., 3500

CAD SCALE	SHEET	DWG. NO.	REV.
2 : 1	1 OF 1	C94C650	G

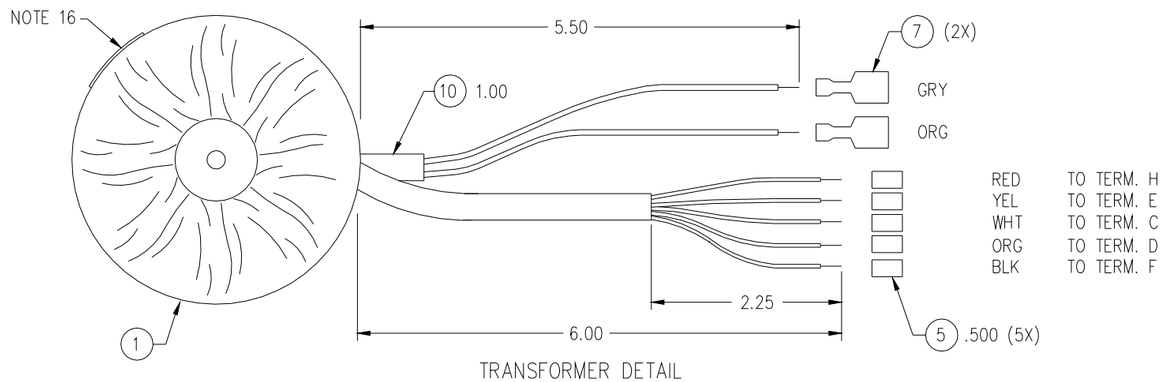

TRANSFORMER DETAIL

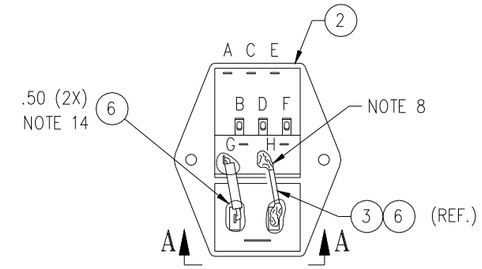

LINE FILTER DETAIL

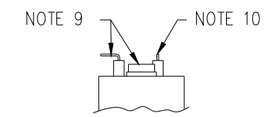

PARTIAL VIEW A-A

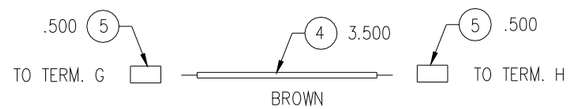

WIRE DETAIL

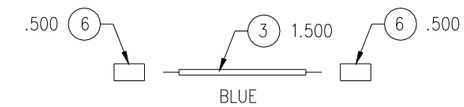

WIRE DETAIL

NOTES

1. ALL WIRE ENDS TO BE STRIPPED .250 ±.015 AFTER CUTTING TO REQUIRED LENGTH.
2. CUT BLUE WIRE (ITEM 3) TO 1.500 LENGTH. TIN BOTH ENDS OF WIRE.
3. CUT BROWN WIRE (ITEM 4) TO 3.500. TIN ONE END OF WIRE.
4. ON TRANSFORMER, CUT ORANGE AND GRAY WIRES 5.50 FROM TRANSFORMER.
5. APPLY 1.00 LENGTH OF P/N WT05 HEAT SHRINK (ITEM 10) OVER ORANGE & GRAY WIRES AT LOCATION SHOWN AND SHRINK IN PLACE.
6. ON TRANSFORMER, CUT SLEEVING (CONTAINING MULTI WIRES) 6.00 FROM TRANSFORMER. STRIP SLEEVING BACK 2.25. TIN THE BLACK, YELLOW, ORANGE, WHITE, AND RED WIRES.
7. CRIMP TERMINAL (ITEM 7) TO ORANGE AND GRAY WIRES.
8. BEND TERMINAL "H" OUTWARD AT 45° ANGLE.
9. BEND LEFT FILTER TAB OUTWARD AT INSULATOR TO 90° BEND AS SHOWN IN VIEW A-A. CUT OFF UPPER HALF OF GROUND TAB.
10. CUT OFF UPPER HALF OF RIGHT TAB. PLACE TWO .500 PIECES OF P/N WT15 HEAT SHRINK (ITEM 6) ONTO 1.500 PIECE OF BLUE WIRE. J-HOOK WIRE ENDS AND SOLDER TO TERMINALS AS SHOWN IN LINE FILTER DETAIL.
11. PLACE A .500 PIECE OF HEAT SHRINK (ITEM 5) ONTO THE INDIVIDUAL WIRES AND ONTO THE TINNED TRANSFORMER WIRES. J-HOOK WIRE ENDS AND SOLDER TO TERMINALS AS INDICATED BY THE DESIGNATED TERMINAL LETTER. USE FLUX SPARINGLY.
12. IMPORTANT: DO NOT CLEAN FLUX FROM SOLDER CONNECTIONS. EXCESS FLUX IS A CRITERION FOR ACCEPT/REJECT.
13. ROUTE TO INSPECTION.
14. APPLY THE HEAT SHRINK OVER THE SOLDER JOINTS.
15. USE P/N M008A, RTV (ITEM 8) SPARINGLY TO COVER TERMINALS SHOWN IN LINE FILTER DETAIL.
16. PRINT ASSEMBLY NUMBER, REVISION, LOT NUMBER, AND ASSEMBLER INITIALS ONTO P/N L087, LABEL (ITEM 9). ATTACH LABEL TO TRANSFORMER CIRCUMFERENCE AS SHOWN.

ITEM / REF. DES.	PART NO.	QTY.	DESCRIPTION
10	WT05	1.00	HEAT SHRINK, 3/16" I.D., BLACK
9	L087	1	LABEL, COMPTR. PRNTBL, 1.25 x .375
8	M008A	A/R	ADHESIVE/SEALANT, RTV, CLEAR, 732
7	PT23	2	FAST-ON, 16-14 AWG
6	WT15	1.00	HEAT SHRINK, 1/4" I.D., RED
5	WT01	3.50	HEAT SHRINK, 1/8" I.D., BLACK
4	W015	3.50	WIRE, 18 GAGE 19 X 30 BROWN UL-1430
3	W016	1.50	WIRE, 18 GAGE 19 X 30 BLUE UL-1430
2	HE08	1	LINE FILTER
1	T059	1	TRANSFORMER, TOROIDAL 117V/234V

REV.	DESCRIPTION	BY	DATE
J	PER ECN #7311	JWT	23SEP99
H	PER ECN #6835	CHY	25SEP98
G	PER ECN #6691	CHY	25JUN98
F	PER ECN #6251	SR	23JAN98
E	PER ECN #5912	CHY	22AUG97
D	PER ECN #5652	CHY	8APR97
C	PER ECN #5402	CHY	26NOV96
B	PER ECN #4784	CHY	2/26/96
A	RELEASE, ECN #4571	SR	10/13/95

THIS DOCUMENT IS CONFIDENTIAL AND PROPRIETARY AND IS THE SOLE PROPERTY OF INVIVO RESEARCH INCORPORATED (IRI). IT IS NOT TO BE DISCLOSED TO ANY PARTY, REPRODUCED OR USED IN ANY OTHER MANNER WITHOUT WRITTEN CONSENT OF SAID COMPANY. INVIVO MAINTAINS THE RIGHT TO CHANGE SPECIFICATIONS AT ANY TIME WITHOUT PRIOR NOTICE.

UNLESS OTHERWISE SPECIFIED TOLERANCES ARE
.xx = ± .25
.xxx = ± .062
ANGLES = ± ——

DRAWN	SR	9/29/95
DESIGNED	RS	9/25/95
CHECKED		
APPROVED		

INCHES — THIRD ANGLE PROJECTION

DO NOT SCALE THIS DRAWING !!!

Invivo Research Inc.
PRECISION BIOMEDICAL INSTRUMENTS
12601 RESEARCH PARKWAY., ORLANDO, FL 32826

TITLE
SUB-ASSEMBLY: AS136
ASSY, MAINS INPUT AND TRNSFRMR, 3500

CAD SCALE	SHEET	DWG. NO.	REV.
NONE	1 OF 1	C94C689	J

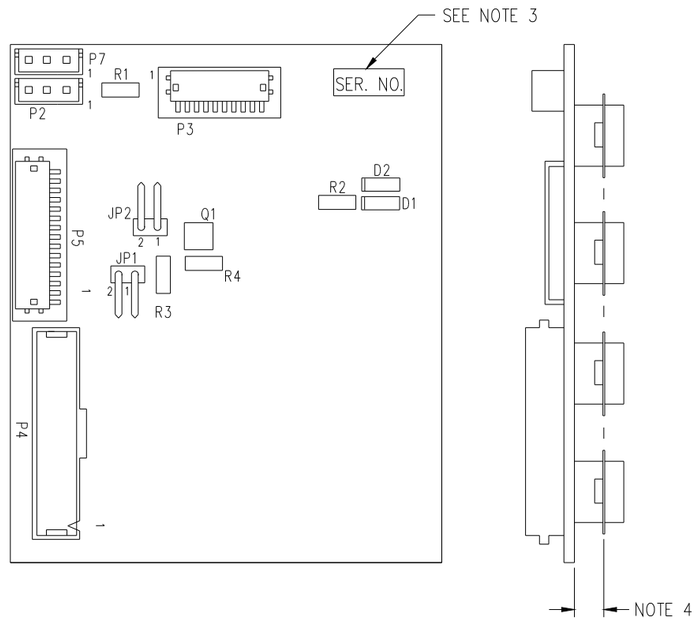

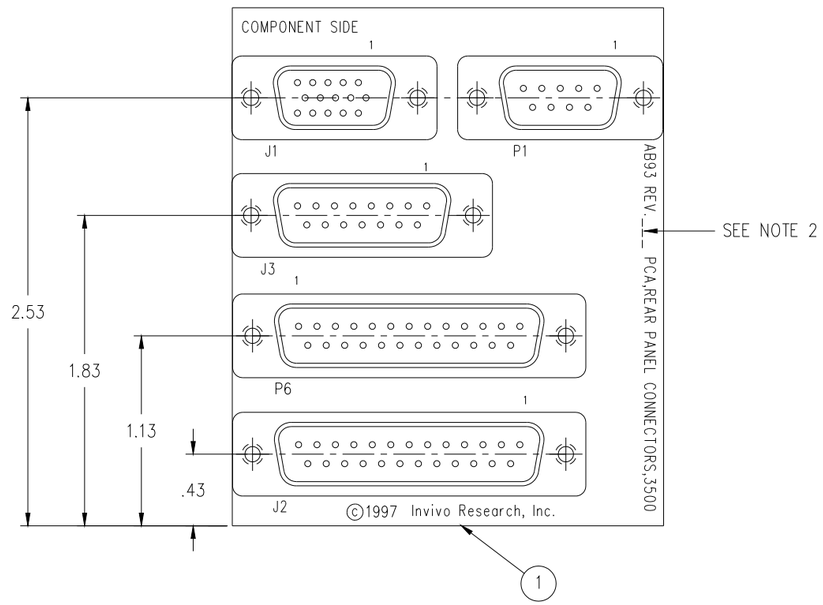

ITEM / REF. DES.	PART NO.	QTY.	DESCRIPTION
Q1	QX00	1	TRANSISTOR, NPN, SILI, SO23, TYPE 2222
P6	PA304	1	CONN, DB25 MALE, ST, THD INSERTS
P5	PA261	1	CONN, 15P, SR. HDR, RA, SHRD, .049
P4	PA276	1	CONN, 40P, DR. HDR, SHRD, .050 CTRS
P3	PA263	1	CONN, 10P, SR. HDR, RA, SHRD, .049
P2, P7	PA294	2	CONN, 3P, SR.HDR, ST, SHRD, .098 CTRS
P1	PA279	1	CONN, DB9 RCPT, ST, P.C.MT, INSRTS
J3	PA281	1	CONN, DB15 RECPT, ST, P.C.MT, INSRT
J2	PA280	1	CONN, DB25 RCPT, ST, P.C.MT, INSRT
J1	PA282	1	CONN, DB15 VGA RCPT, ST, P.C.MT
JP1,JP2	PA41	2	HEADER, UNSH, SR, 2 PIN (.10)
R2,R4	RX57	2	RES, 10K, .125, 1%, 100PPM, 1206
R1,R3	RX23	2	RES, 1K+-5%, .125W, 200PPM, CHIP
D1,D2	DDX01	2	DIODE, SIGNAL, LEADLESS, 500mW
1	B165	1	PCB, REAR PANEL CONNECTORS, 3500 REV. F

NOTES

1. WORKMANSHIP TO CONFORM TO IPC CLASS II REQUIREMENTS.
2. USING PERMANENT MARKER IN CONTRASTING COLOR, PLACE CURRENT ASSEMBLY REV. IN SPACE PROVIDED.
3. BOARD REQUIRES SERIALIZED LABELING WITH THE FOLLOWING INFORMATION:
   UNIQUE SERIAL NO., ASSEMBLY P/N & CURRENT REV. LEVEL.
   PLACE SERIAL NUMBER LABEL IN THIS AREA-ORIENT AS SHOWN.
4. CONNECTOR FLANGES TO BE IN-LINE WITH EACH OTHER AND PARALLEL TO SURFACE OF P.C. BOARD WITHIN .030. INSURE CONNECTORS ARE PROPERLY SEATED TO SURFACE OF P.C. BOARD BEFORE SOLDERING.

REV.	DESCRIPTION	BY	DATE
H	PER ECN #5581	JRB	25MAR97
G	PER ECN #5504	SLC	13JAN97
F	PER ECN #5461	SLC	16DEC96
E	PER ECN #5414	SLC	22NOV96
D	PER ECN #5190	SR	05AUG96
C	PER ECN #4932	JRB	4/9/96
B	PER ECN #4925	JRB	4/1/96
A	RELEASED, ECN #4799	JRB	2/2/96

THIS DOCUMENT IS CONFIDENTIAL AND PROPRIETARY AND IS THE SOLE PROPERTY OF INVIVO RESEARCH INCORPORTATED (IRI). IT IS NOT TO BE DISCLOSED TO ANY PARTY, REPRODUCED OR USED IN ANY OTHER MANNER WITHOUT WRITTEN CONSENT OF SAID COMPANY. INVIVO MAINTAINS THE RIGHT TO CHANGE SPECIFICATIONS AT ANY TIME WITHOUT PRIOR NOTICE.

UNLESS OTHERWISE SPECIFIED TOLERANCES ARE
.XX = ± .02
.XXX = ± ——
ANGLES = ± ——

DRAWN	SR	11/20/95
DESIGNED	SLN	6/16/94
CHECKED		
APPROVED		

INCHES — THIRD ANGLE PROJECTION

DO NOT SCALE THIS DRAWING !!!

Invivo Research Inc.
PRECISION BIOMEDICAL INSTRUMENTS
12601 RESEARCH PARKWAY., ORLANDO, FL 32826

TITLE ASSEMBLY: AB93
PCA, REAR PANEL CONNECTORS, 3500

CAD SCALE	SHEET	DWG. NO.	REV.
2 : 1	1 OF 1	C94C692	H

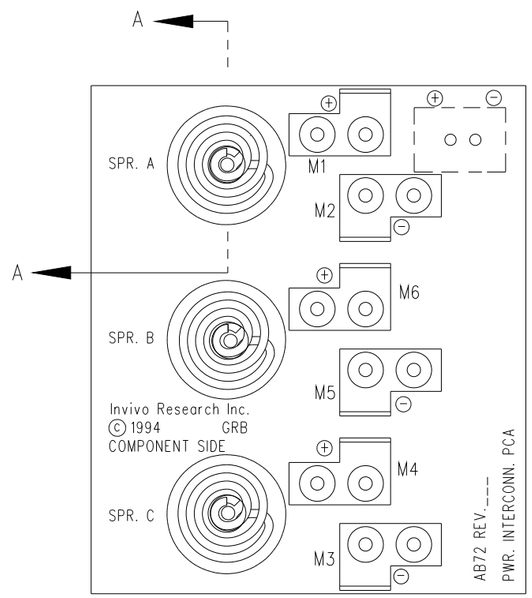

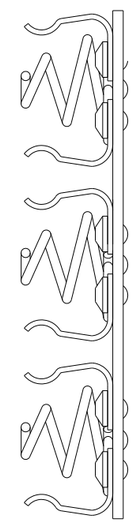

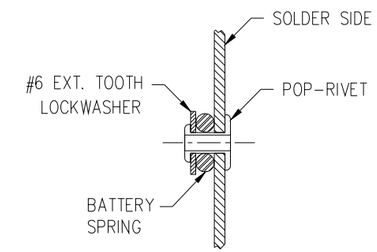

SECTION A–A
CAD SCALE: 4 : 1

NOTES

1. INSTALL BATTERY CONTACTS USING 1/8" DIA X 3/16" LG. BRASS EYELETS. EYELETS TO BE FIRMLY SWAGED OVER ON COMPONENT SIDE.

2. INSTALL BATTERY SPRINGS USING 1/8" DIA. ALUMINUM POP-RIVETS AS SHOWN IN SECTION A–A.

ITEM / REF. DES.	PART NO.	QTY.	DESCRIPTION
SPR A,B,C	HM50M	3	SPRING, BATTERY EJECTOR, 3500
M1–M6	HM50AB	6	BATTERY CONTACT, OMNI–TRACK 3500
1	B151	1	PCB, POWER INTERCONNECT REV. C

REV.	DESCRIPTION	BY	DATE
D	PER ECN #5320	SR	26NOV96
C	PER ECN #5048	SLC	02JUL96
B	PER ECN #4998	JRB	4/22/96
A	RELEASED, ECN #4793	JRB	2/7/96

REV.	DESCRIPTION	BY	DATE
E	PER ECN #7615	CHY	16AUG00

THIS DOCUMENT IS CONFIDENTIAL AND PROPRIETARY AND IS THE SOLE PROPERTY OF INVIVO RESEARCH INCORPORTATED (IRI). IT IS NOT TO BE DISCLOSED TO ANY PARTY, REPRODUCED OR USED IN ANY OTHER MANNER WITHOUT WRITTEN CONSENT OF SAID COMPANY. INVIVO MAINTAINS THE RIGHT TO CHANGE SPECIFICATIONS AT ANY TIME WITHOUT PRIOR NOTICE.

UNLESS OTHERWISE SPECIFIED TOLERANCES ARE
.XX = ± ——
.XXX = ± ——
ANGLES = ± ——

DRAWN	JRB	2/7/96
DESIGNED	SLN	6/16/94
CHECKED		
APPROVED		

INCHES — THIRD ANGLE PROJECTION

DO NOT SCALE THIS DRAWING !!!

Invivo Research Inc.
PRECISION BIOMEDICAL INSTRUMENTS
12601 RESEARCH PARKWAY., ORLANDO, FL 32826

TITLE ASSEMBLY: AB72
PCA, POWER INTERCONNECT 3500

CAD SCALE	SHEET	DWG. NO.	REV.
2 : 1	1 OF 1	C94C706	E

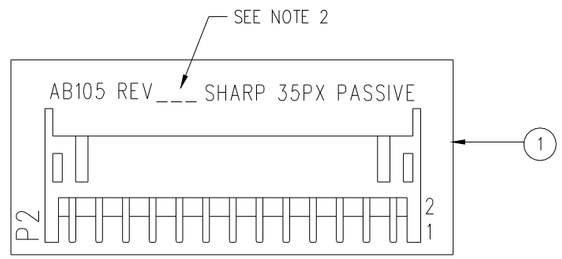

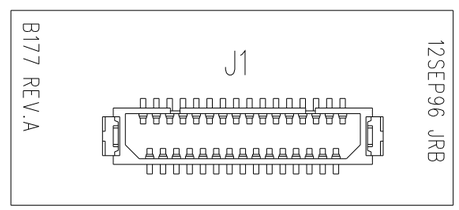

NOTES

1. WORKMANSHIP TO CONFORM TO IPC CLASS II REQUIREMENTS.
2. USING INDELIBLE INK IN CONTRASTING COLOR, PLACE CURRENT ASSEMBLY REV. IN SPACE PROVIDED.

ITEM / REF. DES.	PART NO.	QTY.	DESCRIPTION
P2	PA290	1	CONN, 26P, DR. HDR, RA, SHRD, .079
J1	PA288	1	CONN, 31P, BD-BD. RCPT, .039, SMT.
1	B177	1	PCB, SHARP 35PX PASS.CABLE ADPT, REV.A

REV.	DESCRIPTION	BY	DATE
A	RELEASED, ECN#5264	JRB	16SEP96

THIS DOCUMENT IS CONFIDENTIAL AND PROPRIETARY AND IS THE SOLE PROPERTY OF INVIVO RESEARCH INCORPORATED (IRI). IT IS NOT TO BE DISCLOSED TO ANY PARTY, REPRODUCED OR USED IN ANY OTHER MANNER WITHOUT WRITTEN CONSENT OF SAID COMPANY. INVIVO MAINTAINS THE RIGHT TO CHANGE SPECIFICATIONS AT ANY TIME WITHOUT PRIOR NOTICE.

UNLESS OTHERWISE SPECIFIED TOLERANCES ARE
.XX = ±
.XXX = ±
ANGLES = ±

DRAWN	JRB	16SEP96
DESIGNED	JRB	13SEP96
CHECKED		
APPROVED		

INCHES — THIRD ANGLE PROJECTION

DO NOT SCALE THIS DRAWING !!!

Invivo Research Inc.
PRECISION BIOMEDICAL INSTRUMENTS
12601 RESEARCH PARKWAY., ORLANDO, FL 32826

TITLE
ASSEMBLY: AB105
PCA, SHARP 35PX PASS.CABLE ADPT

CAD SCALE	SHEET	DWG. NO.	REV.
4 : 1	1 OF 1	C94C735	A

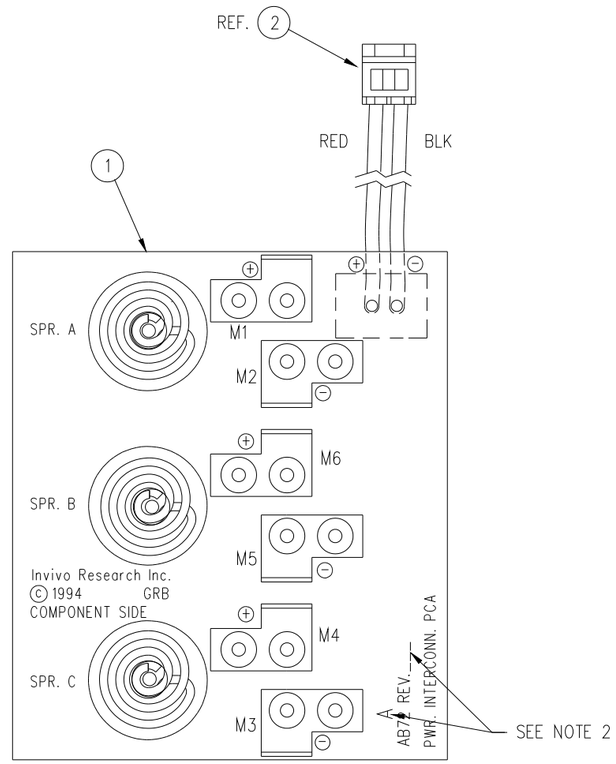

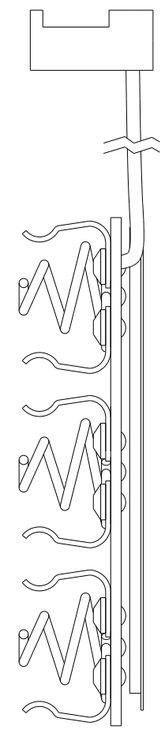

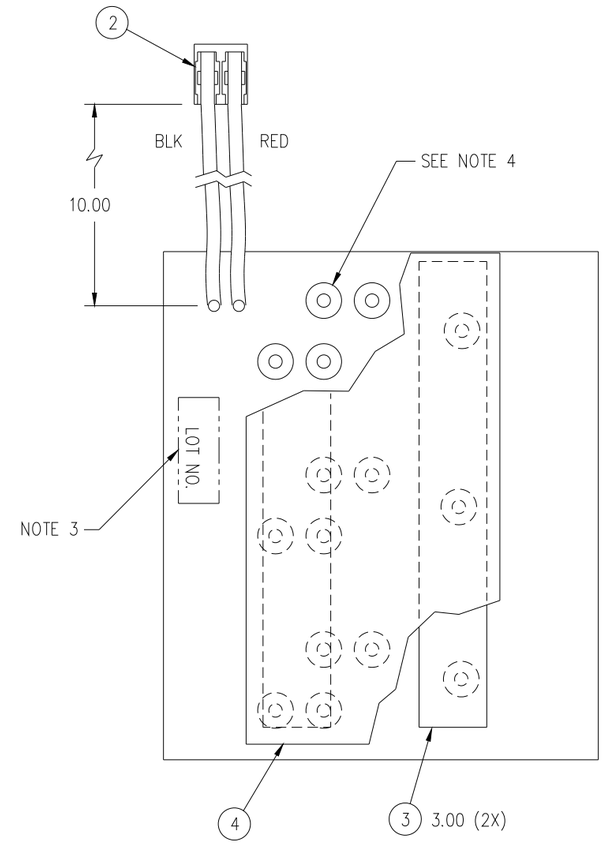

NOTES

1. WORKMANSHIP TO CONFORM TO IPC CLASS II REQUIREMENTS.
2. USING INDELIBLE INK IN CONTRASTING COLOR, PRINT AN "A" AFTER AB72 & CURRENT ASSEMBLY REV. IN SPACE PROVIDED
3. USING INDELIBLE INK IN CONTRASTING COLOR, PRINT LOT NUMBER IN AREA SHOWN, ON SOLDERSIDE.
4. SOLDER EYELETS (12X) ON BOTH SIDES OF BOARD.
5. SOLDER P/N AC267, BATTERY CABLE (ITEM 2) AS SHOWN.
6. ROUTE TO INSPECTION.
7. CUT P/N M000, DS TAPE (ITEM 3) INTO TWO EQUAL LENGTHS TO ATTACH P/N HM50AU, INSULATOR (ITEM 4) AS SHOWN.

ITEM / REF. DES.	PART NO.	QTY.	DESCRIPTION
4	HM50AW	1	INSULATOR, PWR. INTCN.
3	M000	6.00	TAPE, OPN.CL.FM, DS, .06THK.X.38W
2	AC267	1	CAB, BATTERY, OMNI-TRAK 3500
1	AB72	1	PCB, POWER INTERCONNECT

REV.	DESCRIPTION	BY	DATE
d	PER ECN #7693	CHY	17MAR00
C	PER ECN #6104	KCO	10NOV97
B	PER ECN #5493	CHY	31JAN97
A	RELEASED, ECN #5320	SR	26NOV96

THIS DOCUMENT IS CONFIDENTIAL AND PROPRIETARY AND IS THE SOLE PROPERTY OF INVIVO RESEARCH INCORPORTATED (IRI). IT IS NOT TO BE DISCLOSED TO ANY PARTY, REPRODUCED OR USED IN ANY OTHER MANNER WITHOUT WRITTEN CONSENT OF SAID COMPANY. INVIVO MAINTAINS THE RIGHT TO CHANGE SPECIFICATIONS AT ANY TIME WITHOUT PRIOR NOTICE.

UNLESS OTHERWISE SPECIFIED TOLERANCES ARE
.XX = ±
.XXX = ±
ANGLES = ±

DRAWN	SR	26NOV96
DESIGNED	DM	22NOV96
CHECKED		
APPROVED		

INCHES — THIRD ANGLE PROJECTION

DO NOT SCALE THIS DRAWING !!!

Invivo Research Inc.
PRECISION BIOMEDICAL INSTRUMENTS
12601 RESEARCH PARKWAY., ORLANDO, FL 32826

TITLE ASSEMBLY: AB72A
PCA, POWER INTRCNCT. W/CABLE, 3500

CAD SCALE	SHEET	DWG. NO.	REV.
2 : 1	1 OF 1	C94C740	D

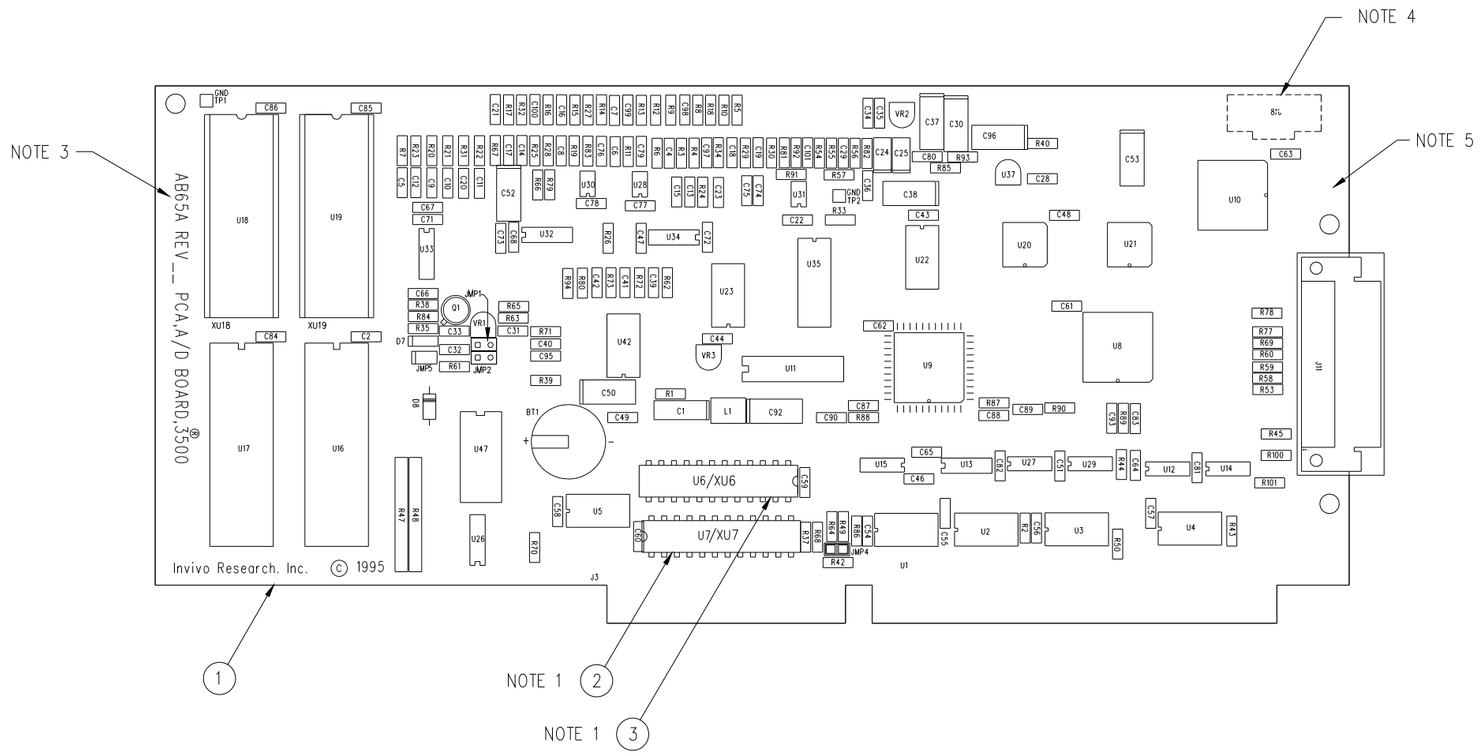

NOTES

1. INSTALL P/N AM47 PROM SET A (ITEM 2) AT U7 AND P/N AM48 PROM SET B (ITEM 3) AT U6.
2. TEST BOARD PER CURRENT REVISION OF TP053 TEST PROCEDURE
3. CHANGE PART NUMBER ON BOARD AND SERIAL NUMBER LABEL TO: AB65A
4. PLACE S/N LABEL ON FLATSIDE OF J18, ON SOLDER SIDE.
5. AFFIX TEST STAMP.

ITEM / REF. DES.	PART NO.	QTY.	DESCRIPTION
3	AM48	1	PROM SET, A/D, B, 3500
2	AM47	1	PROM SET, A/D, A, 3500
1	AB65	1	PCA, A/D, 3500

REV.	DESCRIPTION	BY	DATE
C	PER ECN #8181	CHY	22MAR01
B	PER ECN #5810	CHY	10JUL97
A	RELEASED, ECN #5487	SR	21FEB97

THIS DOCUMENT IS CONFIDENTIAL AND PROPRIETARY AND IS THE SOLE PROPERTY OF INVIVO RESEARCH INCORPORATED (IRI). IT IS NOT TO BE DISCLOSED TO ANY PARTY, REPRODUCED OR USED IN ANY OTHER MANNER WITHOUT WRITTEN CONSENT OF SAID COMPANY. INVIVO RESEARCH INC. MAINTAINS THE RIGHT TO CHANGE SPECIFICATIONS AT ANY TIME WITHOUT PRIOR NOTICE.

UNLESS OTHERWISE SPECIFIED TOLERANCES ARE
.XX = ±
.XXX = ±
ANGLES = ±

DRAWN	SR	18FEB97
DESIGNED	LE	18FEB97
CHECKED		
APPROVED		

INCHES — THIRD ANGLE PROJECTION

DO NOT SCALE THIS DRAWING !!!

Invivo Research Inc.
PRECISION BIOMEDICAL INSTRUMENTS
Subsidiary of Invivo Corporation
12601 RESEARCH PARKWAY., ORLANDO, FL 32826

TITLE: ASSEMBLY: AB65A
ASSY, A/D PCA, 3500

CAD SCALE:	SHEET:	DWG. NO.:	REV.:
1 : 1	1 OF 1	C94C744	C

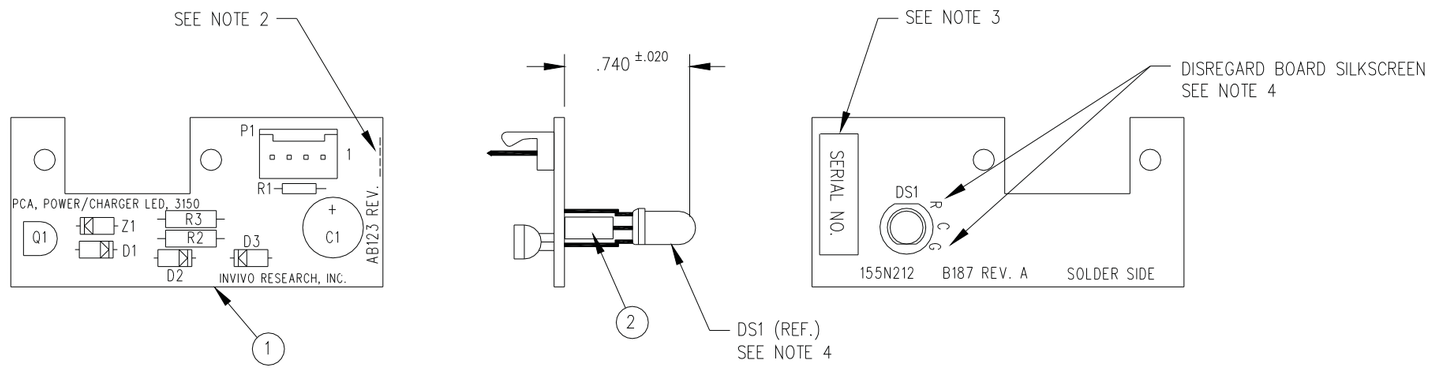

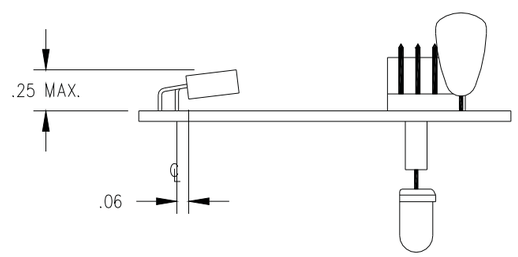

NOTES

1. WORKMANSHIP TO CONFORM TO IPC CLASS II REQUIREMENTS.
2. USING INDELIBLE INK IN CONTRASTING COLOR, PLACE CURRENT ASSEMBLY REV. IN SPACE PROVIDED.
3. BOARD REQUIRES SERIALIZED LABELING WITH THE FOLLOWING INFORMATION: UNIQUE SERIAL NO., ASSEMBLY P/N & CURRENT REV. LEVEL. PLACE SERIAL NUMBER LABEL IN THIS AREA–ORIENT AS SHOWN.
4. INSTALL LED DS1 PERPENDICULAR TO BOARD (±3°) ORIENTED AS SHOWN BY FLAT SIDE AND LEAD SHAPE.

ITEM / REF. DES.	PART NO.	QTY.	DESCRIPTION
2	HS19	1	SPACER, NYLON .089 X .148 X .310
R1	RF201	1	RES, 150 OHM, .125W, 1%, MF
R3	RF39	1	RES, 1.24K, .25W, 1%, MF
R2	R033	1	RES, 470 OHM, .25W, 5%, CF
Q1	Q038	1	TRANS, PNP, MPSW51
P1	PA344	1	CONN, SR, 4P, HDR, DT, LCKG, .100 CTRS
Z1	DZ08	1	ZENER, 1N52458, 15V, 500mW
DS1	DL28	1	LED, BI–COLOR, RED/GREEN, T1 3/4
D1, D2, D3	D000	3	DIODE, SIGNAL, 1N4148
C1	CT23	1	CAP, 47uF, 20%, 35V, RADIAL, TANT.
1	B187	1	PCB, POWER/CHARGER LED, 3150, REV. A

REV.	DESCRIPTION	BY	DATE
C	PER ECN #8271	CHY	16MAR01
B	PER ECN #6669	CHY	300CT98
A	RELEASED, ECN #6432	JRB	19MAR98

THIS DOCUMENT IS CONFIDENTIAL AND PROPRIETARY AND IS THE SOLE PROPERTY OF INVIVO RESEARCH INCORPORATED (IRI). IT IS NOT TO BE DISCLOSED TO ANY PARTY, REPRODUCED OR USED IN ANY OTHER MANNER WITHOUT WRITTEN CONSENT OF SAID COMPANY. INVIVO RESEARCH INC. MAINTAINS THE RIGHT TO CHANGE SPECIFICATIONS AT ANY TIME WITHOUT PRIOR NOTICE.

UNLESS OTHERWISE SPECIFIED TOLERANCES ARE
.XX = ± .02
.XXX = ± .010
ANGLES = ± 1°

DRAWN	JRB	19MAR98
DESIGNED	JRB	19MAR98
CHECKED		
APPROVED		

INCHES — THIRD ANGLE PROJECTION

DO NOT SCALE THIS DRAWING !!!

Invivo Research Inc.
PRECISION BIOMEDICAL INSTRUMENTS
Subsidiary of Invivo Corporation
12601 RESEARCH PARKWAY, ORLANDO, FL 32826

TITLE:
ASSEMBLY: AB123
PCA, POWER/CHARGER LED, 3150

CAD SCALE:	SHEET:	DWG. NO.:	REV.:
1 : 1	1 of 1	C94C799	C

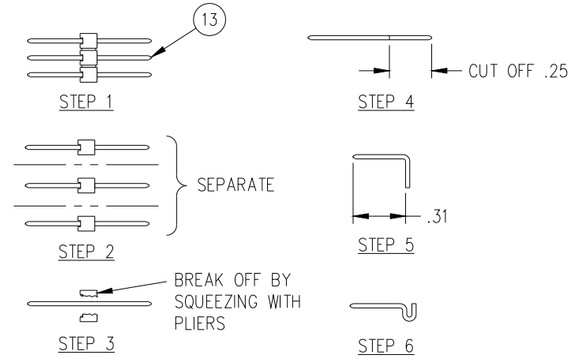

PIN FABRICATION DETAIL

SCALE: 2 : 1

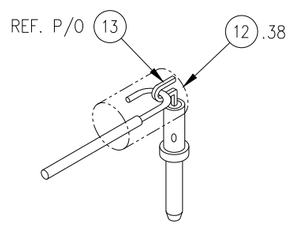

DETAIL A

SCALE: 2 : 1

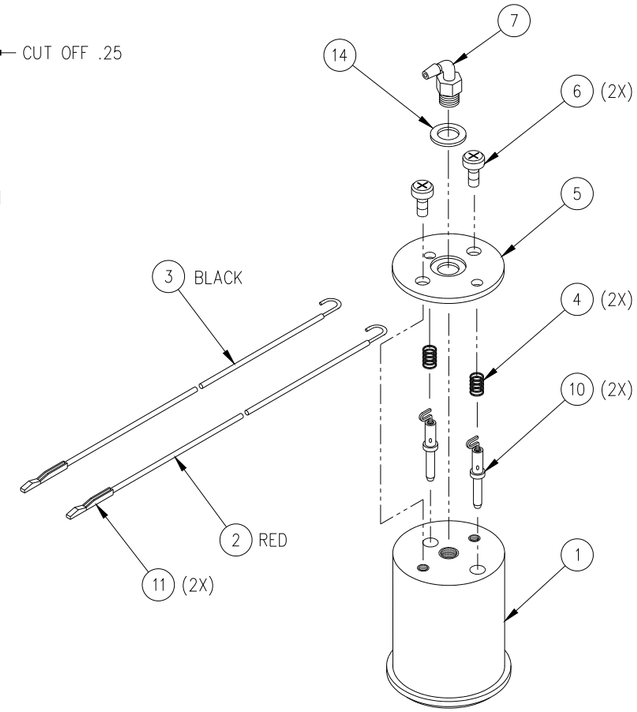

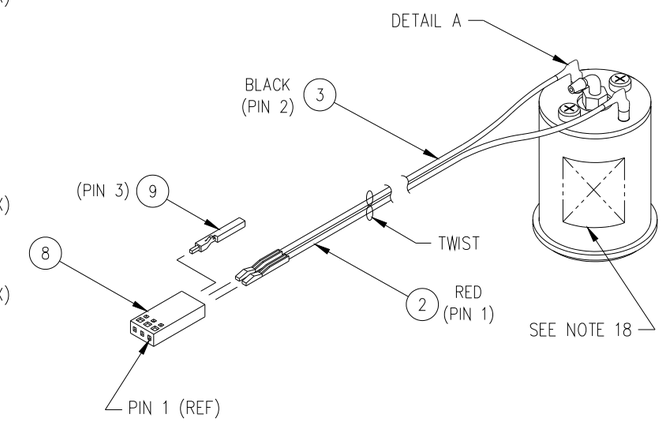

NOTES:

1. CUT WIRES (ITEMS 2 & 3) TO 10.50 LENGTHS.
2. STRIP WIRES FOR P/N PT07B CONTACT (ITEM 11) ON ONE END AND FOR P/N PA379 PIN (ITEM 10) ON THE OTHER END PER AI046.
3. TIN THE END STRIPPED FOR PA379 PIN.
4. CRIMP PT07B CONTACT ON THE UNTINNED END.
5. ROUTE TO INSPECTION.
6. PREPARE PINS FROM P/N PA08A HEADER (ITEM 13) AS SHOWN IN PIN FABRICATION DETAIL.
7. INSERT AND SOLDER THE PINS INTO PA379 PINS, ENSURING THERE ARE NO SOLDER LUMPS OR TAILS ON EXTERIOR DIAMETER OF PIN BARREL.
8. PLACE PA379 PINS INTO HOLES IN P/N HM70T COUPLER (ITEM 1).
9. SLIP P/N HM70W SPRINGS (ITEM 4) OVER THE PINS.
10. SLIDE P/N HM70U END CAP (ITEM 5) OVER PINS AND MOUNT TO HM70T COUPLER USING TWO P/N NS04 SCREWS (ITEM 6). ENSURE PINS WORK FREELY IN COUPLER BEFORE TIGHTENING.
11. J-HOOK AND SOLDER RED WIRE TO THE PIN IN THE OUTER HOLE IN HM70T AND THE BLACK WIRE TO THE PIN IN THE INNER HOLE AS SHOWN. ENSURE PINS WORK FREELY IN COUPLER AFTER SOLDERING.
12. ROUTE TO INSPECTION.
13. SLIDE .38 LENGTH OF P/N WT04 HEATSHRINK (ITEM 12) OVER SOLDER CONNECTIONS AND SHRINK IN PLACE.
14. MOUNT P/N HP130 FITTING (ITEM 7) WITH P/N HP14 GASKET (ITEM 14) INTO HM70T COUPLER.
15. TWIST TERMINATED WIRES APPROXIMATELY 1 TURN PER INCH AND INSERT INTO P/N PA20 HOUSING (ITEM 8).
16. INSERT P/N PA12 KEYING PLUG (ITEM 9) INTO PA20 HOUSING, PIN 3.
17. ORIENT WIRES TO FACE SAME DIRECTION AS HP130 ELBOW FITTING.
18. USING A PERMANENT MARKER OF CONTRASTING COLOR, PRINT ASSEMBLY NUMBER, REVISION, LOT NUMBER & ASSEMBLER INITIALS IN AREA SHOWN.
19. ROUTE TO INSPECTION.

ITEM / REF. DES.	PART NO.	QTY.	DESCRIPTION
14	HP14	1	GASKET, BARB 11761 BULK
13	PA08A	1	CONN., 3P, SR, HDR, .31 SOLDERTAIL
12	WT04	.75	HEAT SHRINK, 3/32" I.D., BLACK
11	PT07B	2	CNCT., LKG.CLP, 26-22 AWG, GOLD, ST
10	PA379	2	PIN, PRINTED CIRCUIT, .080 DIA.
9	PA12	1	KEYING PLUG (.10)
8	PA20	1	HOUSING, SINGLE ROW, 3 PIN (.10)
7	HP130	1	FITTING, 1/16 ID X #10-32 MALE ELBOW, PVDF
6	NS04	2	SCR, #4-40 X 1/4" LG, PHMS-XR, ZN
5	HM70U	1	END CAP, COUPLER, FiO2 SENSOR
4	HM70W	2	SPRING, CONTACT, FiO2 SENSOR
3	W047	10.50	26 GA., 19 x 38, BLACK, UL-1429
2	W038	10.50	26 GA., 19 x 38, RED, UL-1429
1	HM70T	1	COUPLER, FiO2 SENSOR

REV.	DESCRIPTION	BY	DATE
D	PER ECN #7950	SR	18AUG00
C	PER ECN #7352	CHY	9DEC99
B	PER ECN #6891	CHY	4NOV98
A	RELEASED, ECN #6664	RLM	08JUN98

THIS DOCUMENT IS CONFIDENTIAL AND PROPRIETARY AND IS THE SOLE PROPERTY OF INVIVO RESEARCH INCORPORATED (IRI). IT IS NOT TO BE DISCLOSED TO ANY PARTY, REPRODUCED OR USED IN ANY OTHER MANNER WITHOUT WRITTEN CONSENT OF SAID COMPANY. INVIVO RESEARCH INC. MAINTAINS THE RIGHT TO CHANGE SPECIFICATIONS AT ANY TIME WITHOUT PRIOR NOTICE.

UNLESS OTHERWISE SPECIFIED TOLERANCES ARE
.XX = ± --
.XXX = ± ---
ANGLES = ± --

DRAWN	RLM	08JUN98
DESIGNED	RLM	DATE
CHECKED		
APPROVED		

INCHES — THIRD ANGLE PROJECTION

DO NOT SCALE THIS DRAWING !!!

Invivo Research Inc.
PRECISION BIOMEDICAL INSTRUMENTS
Subsidiary of Invivo Corporation
12601 RESEARCH PARKWAY., ORLANDO, FL 32826

TITLE: ASSEMBLY: AP50
FiO2 SENSOR COUPLER, 3500

CAD SCALE:	SHEET:	DWG. NO.:	REV.:
1 : 1	1 of 1	C94C811	D

ECN5877

LF20 REV. A

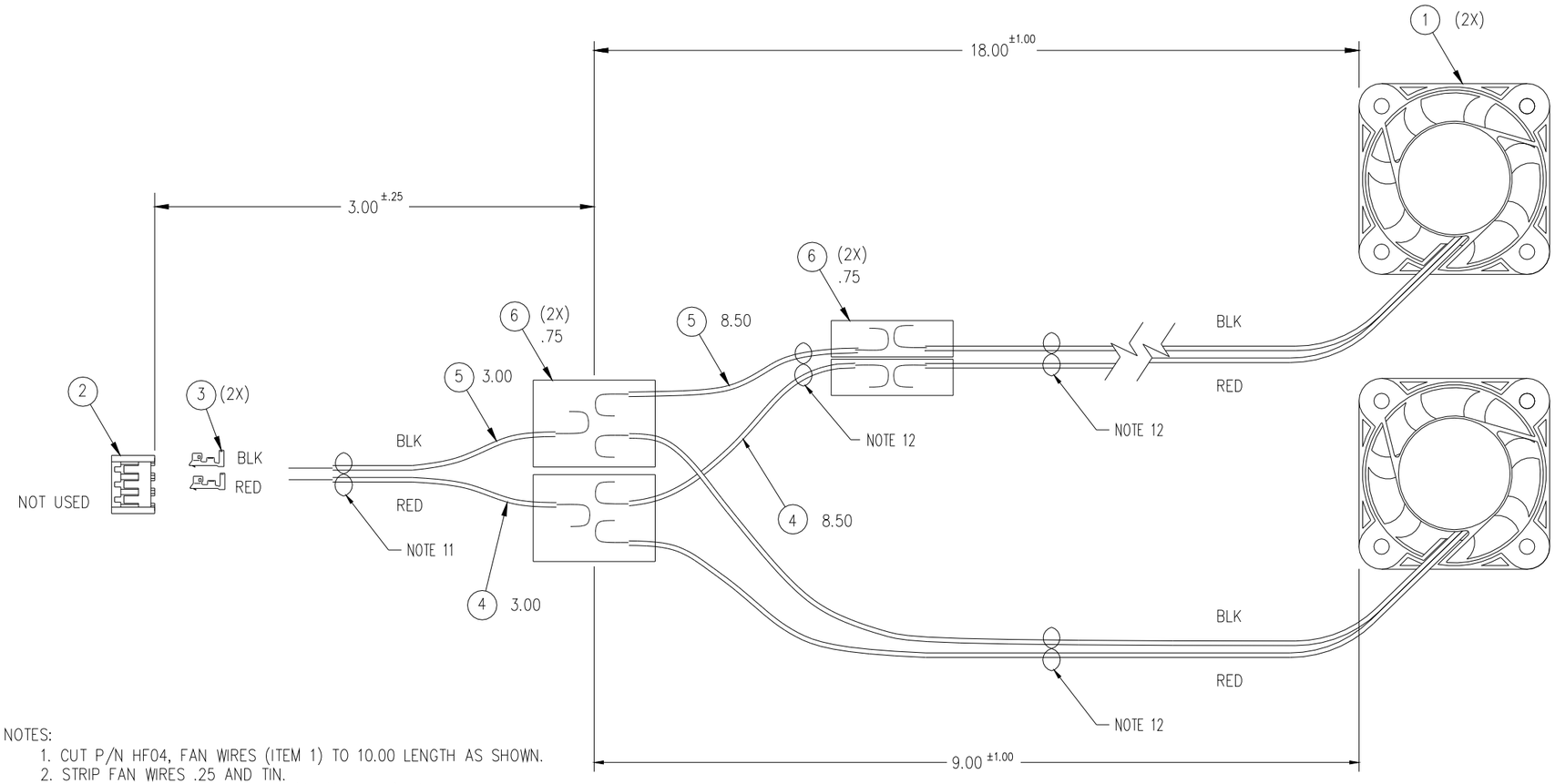

NOTES:

1. CUT P/N HF04, FAN WIRES (ITEM 1) TO 10.00 LENGTH AS SHOWN.
2. STRIP FAN WIRES .25 AND TIN.
3. CUT P/N W038 & W047 WIRES (ITEMS 4 & 5) TO 3.00.
4. STRIP ONE END P/N W038 & W047, WIRES .25 AND TIN.
5. STRIP OTHER END P/N W038 & W047 FOR P/N PT33 CONTACT (ITEM 3) PER AI046
6. CRIMP P/N PT33, TERMINALS (ITEM 3) ONTO THE WIRE ENDS.
7. CUT W038 & W047 WIRES TO 8.50. STRIP AND TIN BOTH ENDS .25.
8. J-HOOK AND SOLDER WIRES TO ONE FAN AS SHOWN.
9. ROUTE TO INSPECTION.
10. ADD .75 LENGTH OF P/N WT01 HEAT SHRINK (ITEM 6) TO COVER SOLDER JOINTS.
11. INSERT TERMINALS INTO P/N PA249, HOUSING (ITEM 2) AS SHOWN, AND TWIST WIRES 1-2 TURNS PER INCH.
12. TWIST FAN WIRES 1-2 TURNS PER INCH, ADD .75 LENGTH OF P/N WT01 HEAT SHRINK (ITEM 6) AND J-HOOK WITH WIRES AS SHOWN.
13. ROUTE TO INSPECTION.
14. SHRINK WT01 OVER CONNECTIONS AS SHOWN.
15. USING INDELIBLE INK IN CONTRASTING COLOR, PRINT ASSEMBLY NUMBER, REVISION, LOT NUMBER AND ASSEMBLER INITIALS ON SIDE OF ONE FAN.
16. ROUTE TO INSPECTION.

ITEM / REF. DES.	PART NO.	QTY.	DESCRIPTION
6	WT01	3.00	HEAT SHRINK, 1/8 ID, BLACK
5	W047	11.50	WIRE, 26 GAGE 19 X 38, BLACK UL-1429
4	W038	11.50	WIRE, 26 GAGE 19 X 38, RED UL-1429
3	PT33	2	CONTACT, CRIMP SOCKET, #22-#30 AWG
2	PA294A	1	CONN, 3P, SR, HSG, ST, .098 CTRS
1	HF04	2	FAN, 12V, D.C., BRUSHLESS, 5.3 CFM, 40MM

REV.	DESCRIPTION	BY	DATE
B	PER ECN # 7237	KCO	14JUN99
A	RELEASED, ECN #7114	KCO	28MAY99

THIS DOCUMENT IS CONFIDENTIAL AND PROPRIETARY AND IS THE SOLE PROPERTY OF INVIVO RESEARCH INCORPORATED (IRI). IT IS NOT TO BE DISCLOSED TO ANY PARTY, REPRODUCED OR USED IN ANY OTHER MANNER WITHOUT WRITTEN CONSENT OF SAID COMPANY. INVIVO RESEARCH INC. MAINTAINS THE RIGHT TO CHANGE SPECIFICATIONS AT ANY TIME WITHOUT PRIOR NOTICE.

UNLESS OTHERWISE SPECIFIED TOLERANCES ARE
.xx = ± .12
.xxx = ± .062
ANGLES = ± —

DRAWN	KCO	28MAY99
DESIGNED	KCO	28MAY99
CHECKED		
APPROVED		

INCHES — THIRD ANGLE PROJECTION

DO NOT SCALE THIS DRAWING !!!

Invivo Research Inc.
PRECISION BIOMEDICAL INSTRUMENTS
Subsidiary of Invivo Corporation
12601 RESEARCH PARKWAY., ORLANDO, FL 32826

TITLE: ASSY: AS141A
FAN, DUAL, 3500

CAD SCALE:	SHEET:	DWG. NO.:	REV.:
NONE	1 OF 1	C94C843	B

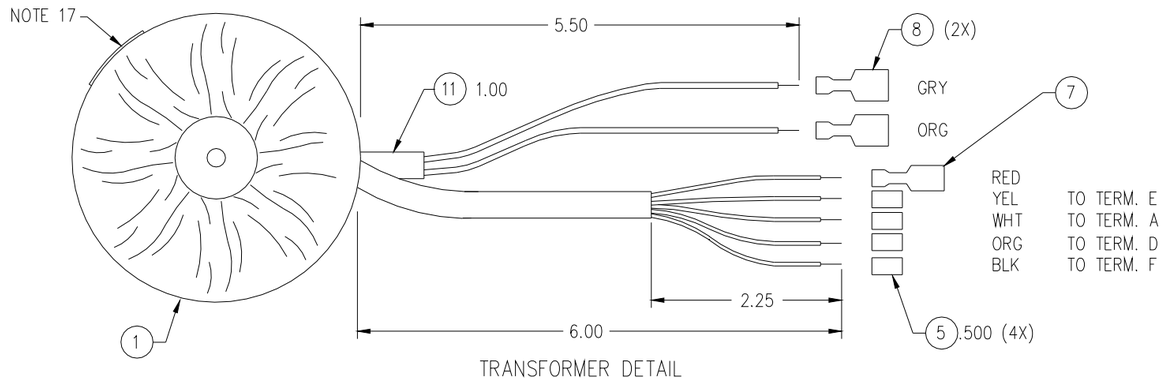

TRANSFORMER DETAIL

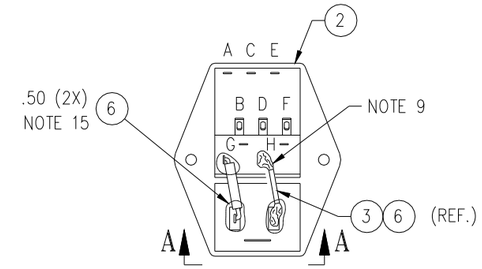

LINE FILTER DETAIL

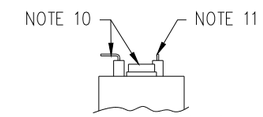

PARTIAL VIEW A-A

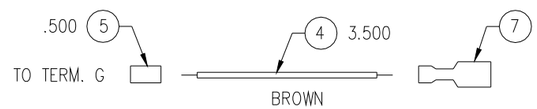

WIRE DETAIL

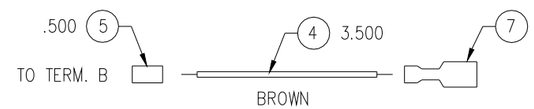

WIRE DETAIL

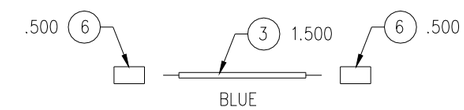

WIRE DETAIL

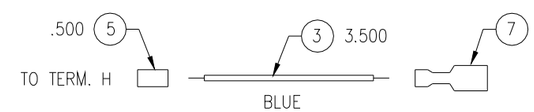

WIRE DETAIL

NOTES

1. ALL WIRE ENDS TO BE STRIPPED .250 $^{\pm.015}$ AFTER CUTTING TO REQUIRED LENGTH.
2. CUT BLUE WIRE (ITEM 3) TO 3.500 AND 1.500 LENGTH. TIN ONE END OF 3.500 WIRE. TIN BOTH ENDS OF 1.500 WIRE.
3. CUT BROWN WIRES (ITEM 4) TO 3.500. TIN ONE END OF EACH WIRE.
4. ON TRANSFORMER, CUT ORANGE AND GRAY WIRES 5.50 FROM TRANSFORMER.
5. APPLY 1.00 LENGTH OF P/N WT05 HEAT SHRINK (ITEM 11) OVER ORANGE & GRAY WIRES AT LOCATION SHOWN AND SHRINK IN PLACE.
6. ON TRANSFORMER, CUT SLEEVING (CONTAINING MULTI WIRES) 6.00 FROM TRANSFORMER. STRIP SLEEVING BACK 2.25. TIN THE BLACK, YELLOW, ORANGE, AND WHITE WIRES.
7. CRIMP TERMINAL (ITEM 8) TO ORANGE AND GRAY WIRES.
8. CRIMP TERMINAL (ITEM 7) TO RED WIRE FROM TRANSFORMER, TO INDIVIDUAL BROWN WIRES (UNTINNED END), AND 3.500 BLUE WIRE (UNTINNED END).
9. BEND TERMINAL "H" OUTWARD AT 45° ANGLE.
10. BEND LEFT FILTER TAB OUTWARD AT INSULATOR TO 90° BEND AS SHOWN IN VIEW A-A. CUT OFF UPPER HALF OF GROUND TAB.
11. CUT OFF UPPER HALF OF RIGHT TAB. PLACE TWO .500 PIECES OF P/N WT15 HEAT SHRINK (ITEM 6) ONTO 1.500 PIECE OF BLUE WIRE. J-HOOK WIRE ENDS AND SOLDER TO TERMINALS AS SHOWN IN LINE FILTER DETAIL.
12. PLACE A .500 PIECE OF HEAT SHRINK (ITEM 5) ONTO THE INDIVIDUAL WIRES AND ONTO THE TINNED TRANSFORMER WIRES. J-HOOK WIRE ENDS AND SOLDER TO TERMINALS AS INDICATED BY THE DESIGNATED TERMINAL LETTER. USE FLUX SPARINGLY.
13. IMPORTANT: DO NOT CLEAN FLUX FROM SOLDER CONNECTIONS. EXCESS FLUX IS A CRITERION FOR ACCEPT/REJECT.
14. ROUTE TO INSPECTION.
15. APPLY THE HEAT SHRINK OVER THE SOLDER JOINTS.
16. USE P/N M008A, RTV (ITEM 9) SPARINGLY TO COVER TERMINALS SHOWN IN LINE FILTER DETAIL.
17. PRINT ASSEMBLY NUMBER, REVISION, LOT NUMBER, AND ASSEMBLER INITIALS ONTO P/N L087, LABEL (ITEM 10). ATTACH LABEL TO TRANSFORMER CIRCUMFERENCE AS SHOWN.

ITEM / REF. DES.	PART NO.	QTY.	DESCRIPTION
11	WT05	1.00	HEAT SHRINK, 3/16" I.D., BLACK
10	L087	1	LABEL, COMPTR. PRNTBL, 1.25 x .375
9	M008A	A/R	ADHESIVE/SEALANT, RTV, CLEAR, 732
8	PT23	2	FAST-ON, 16-14 AWG
7	PT04	4	TERMINAL, RECPT., 2-520193-2
6	WT15	1.00	HEAT SHRINK, 1/4" I.D., RED
5	WT01	3.50	HEAT SHRINK, 1/8" I.D., BLACK
4	W015	7.00	WIRE, 18 GAGE 19 X 30 BROWN UL-1430
3	W016	5.00	WIRE, 18 GAGE 19 X 30 BLUE UL-1430
2	HE08	1	LINE FILTER
1	T059J	1	TRANSFORMER, TOROIDAL 100V

REV.	DESCRIPTION	BY	DATE
A	RELEASE, ECN #7252	CHY	19JUL99

THIS DOCUMENT IS CONFIDENTIAL AND PROPRIETARY AND IS THE SOLE PROPERTY OF INVIVO RESEARCH INCORPORATED (IRI). IT IS NOT TO BE DISCLOSED TO ANY PARTY, REPRODUCED OR USED IN ANY OTHER MANNER WITHOUT WRITTEN CONSENT OF SAID COMPANY. INVIVO MAINTAINS THE RIGHT TO CHANGE SPECIFICATIONS AT ANY TIME WITHOUT PRIOR NOTICE.

UNLESS OTHERWISE SPECIFIED TOLERANCES ARE
.XX = ± .25
.XXX = ± .062
ANGLES = ± ——

DRAWN	CHY	19JUL99
DESIGNED	JWT	19JUL99
CHECKED		
APPROVED		

INCHES — THIRD ANGLE PROJECTION

DO NOT SCALE THIS DRAWING !!!

Invivo Research Inc.
PRECISION BIOMEDICAL INSTRUMENTS
12601 RESEARCH PARKWAY., ORLANDO, FL 32826

TITLE
SUB-ASSEMBLY: AS136J
ASSY, MAINS INPUT AND TRNSFRMR, 3500

CAD SCALE	SHEET	DWG. NO.	REV.
NONE	1 OF 1	C94C848	A

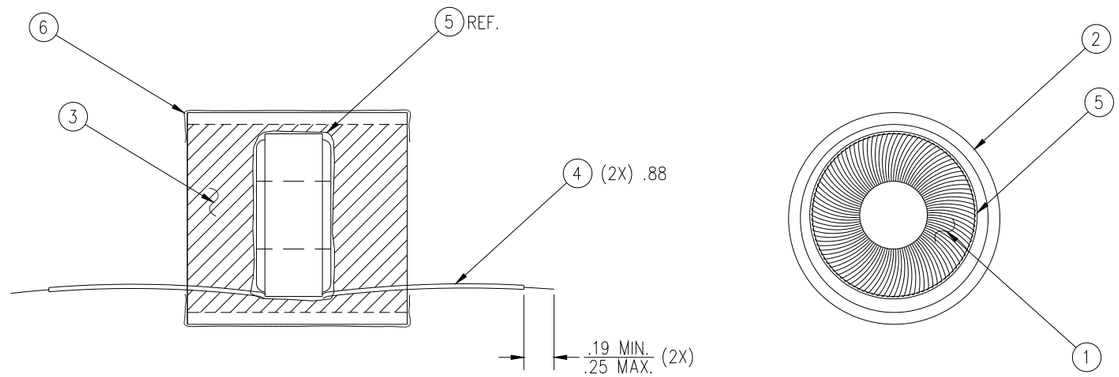

NOTES

1. REMOVE ANY INSULATING COATING ON P/N T042 LEADS (ITEM 1) AND TIN TO .30 MINIMUM.
2. COVER P/N T042 LEADS WITH P/N WT07 HEAT SHRINK (ITEM 5). ADJUST LENGTH OF P/N WT07 TO LEAVE .19 TO .25 OF EXPOSED TINNED LEAD AND SHRINK IN PLACE.
3. PLACE P/N T042 INDUCTOR (ITEM 1) INSIDE P/N HM50CG SHIELD (ITEM 2) WITH ONE INDUCTOR LEAD EXTENDING FROM EACH END OF SHIELD AS SHOWN.
4. CENTER .38 LENGTH OF P/N WT25 (ITEM 5) HEAT SHRINK OVER T042 INDUCTOR AND SHRINK IN PLACE.
5. SECURE INDUCTOR CENTRALLY AS SHOWN WITH P/N M008A RTV ADHESIVE (ITEM 4), BEING CAREFUL TO KEEP INDUCTOR LEAD WIRES FROM CONTACTING SHIELD.
6. CENTER .88 LENGTH OF P/N WT03 HEAT SHRINK (ITEM 6) OVER ASSY AND SHRINK IN PLACE.
7. ROUTE TO INSPECTION.

ITEM / REF. DES.	PART NO.	QTY.	DESCRIPTION
6	WT03	.88	HEAT SHRINK, 3/4 ID, BLACK
5	WT25	.375	HEAT SHRINK, 1/2 I.D., BLACK, ADHESIVE
4	WT07	1.75	HEAT SHRINK, 3/64 ID, BLACK
3	M008A	REF.	ADHESIVE/SEALANT, RTV, CLEAR, 732
2	HM50CG	1	SHIELD, INDUCTOR, 3155A
1	T042	1	INDUCTOR, 100UH

REV.	DESCRIPTION	BY	DATE
B	PER ECN #8889	CHY	20AUG02
A	RELEASED, ECN #7512	KCO	18JAN00

THIS DOCUMENT IS CONFIDENTIAL AND PROPRIETARY AND IS THE SOLE PROPERTY OF INVIVO RESEARCH INCORPORATED (IRI). IT IS NOT TO BE DISCLOSED TO ANY PARTY, REPRODUCED OR USED IN ANY OTHER MANNER WITHOUT WRITTEN CONSENT OF SAID COMPANY. INVIVO RESEARCH INC. MAINTAINS THE RIGHT TO CHANGE SPECIFICATIONS AT ANY TIME WITHOUT PRIOR NOTICE.

UNLESS OTHERWISE SPECIFIED TOLERANCES ARE
.XX = ± .02
.XXX = ± .010
ANGLES = ± 1°

DRAWN	KCO	18JAN00
DESIGNED	RLM	22DEC99
CHECKED		
APPROVED		

INCHES — THIRD ANGLE PROJECTION

DO NOT SCALE THIS DRAWING !!!

INVIVO RESEARCH, INC.
12601 RESEARCH PARKWAY., ORLANDO, FL 32826

TITLE: ASSY: AS169
INDUCTOR, SHIELDED, 3155A

CAD SCALE:	SHEET:	DWG. NO.:	REV.:
4 : 1	1 of 1	C94C858	B

ECN8242

LF20 REV. B

NOTES

1. CUT 10.0 LENGTH OF P/N HP115 1/16 ID TUBING (ITEM 9). CONNECT ONE END TO V1-C. INSTALL & CRIMP P/N HP119 1/8 TUBE CLAMP (ITEM 12) SECURELY IN PLACE ON VALVE PORT. INSTALL P/N HP57 MALE FITTING (ITEM 14) ON THE OTHER END & SNAP P/N HP57A LOCKING NUT (ITEM 15) SECURELY IN PLACE.

2. CUT 6.00 LENGTH OF P/N HP115 1/16 ID TUBING. ATTACH ONE END TO V1-B. INSTALL & CRIMP P/N HP119 1/8 TUBE CLAMP SECURELY IN PLACE ON VALVE PORT.

3. CUT 1.50 LENGTH OF P/N HP115 1/16 ID TUBING. ATTACH ONE END TO V1-A. INSTALL & CRIMP P/N HP119 1/8 TUBE CLAMP SECURELY IN PLACE ON VALVE PORT. INSERT P/N HP117 TUBE CONNECTOR (ITEM 11) INTO END OF TUBE.

4. CUT SIX .80 (± .03) LENGTHS OF P/N HP116 1/8 ID TUBING (ITEM 10). PRE-COAT SENSOR PORT AT U21-F, U20-G AND U20-H WITH P/N M207 LOCTITE PRIMER (ITEM 13). COAT ENTIRE PORT AND WHERE IT ATTACHES TO BASE OF SENSOR. ALSO COAT THE TIPS OF THREE OF THE HP116 LENGTHS OF TUBING. AVOID GETTING PRIMER ON THE I.D. OR THE O.D. NEXT, APPLY P/N M202 LOCTITE ADHESIVE (ITEM 19) TO THE BASE OF THE THREE SENSOR PORTS AND APPROX. HALF WAY UP EACH PORT. ATTACH THE THREE PIECES OF HP116 TUBING IN A TWISTING MOTION TO SPREAD THE ADHESIVE AND FORM A FILLET. PRESS THE TUBES COMPLETELY ONTO THE SENSOR PORTS.

5. ATTACH ONE EACH OF THE OTHER THREE .80 LENGTHS OF HP116 TO ONE END OF P/N HP127 ELBOWS (ITEM 17). BE SURE EACH ELBOW IS FULLY INSERTED INTO THE TUBING.

6. INSERT P/N HP114 REDUCERS (ITEM 8) INTO OTHER END OF EACH TUBE. ORIENTING THE ELBOWS TOWARD THE RIGHT, INSERT ELBOWS FULLY INTO TUBES PREVIOUSLY PLACED ON THE SENSOR PORTS.

   CAUTION: DO NOT USE EXCESSIVE PRESSURE OR TWISTING MOTION AS THIS WILL DAMAGE THE SENSORS.

7. CUT THREE .50 LENGTHS OF P/N HP115 1/16 ID TUBING AND CONNECT THEM TO THE HP114 REDUCERS AT EACH OF THE THREE SENSORS.

8. CONNECT P/N HP113 TEES (ITEM 7) TO EACH OF THESE TUBES, ORIENTED AS SHOWN.

9. CUT .63 LENGTH OF P/N HP115 1/16 ID TUBING. ATTACH ONE END TO TEE AT POINT J AND THE OTHER END TO TEE AT POINT K.

10. CONNECT TUBE FROM V1-B TO TEE AT POINT I, ROUTING BETWEEN U20 & U21.

11. CUT 2.75 LENGTH OF P/N HP115 1/16 ID TUBING AND CONNECT TO TEE AT POINT N.

12. CUT 2.00 LENGTH OF P/N HP115 1/16 ID TUBING. CONNECT FROM TEE AT POINT M TO CORRECTLY ORIENTED P/N HP64 FLOW CONTROL ORIFICE (ITEM 16) AT POINT O.

13. CUT 2.00 LENGTH OF P/N HP115 1/16 ID TUBING. CONNECT TO P/N HP64 FLOW CONTROL ORIFICE (ITEM 16) AT POINT P.

14. CUT 3.50 LENGTH OF P/N HP115 1/16 ID TUBING. CONNECT TO TEE AT POINT L.

15. MOUNT P/N AP49A PUMP ASSEMBLY (ITEM 3) TO P/N AB117A PCA (ITEM 1) CENTERED BESIDE VALVE AS SHOWN ON SHEET 3. ENSURE BOTH PUMP BODY AND BOARD MAKE GOOD CONTACT WITH FOAM TAPE.

16. CONNECT TUBE AT POINT N TO POINT S (FROM PUMP).

17. PLUG PUMP CONNECTOR INTO AB117A-J1.

18. CONDUCT LEAK TEST AS FOLLOWS: TEMPORARILY CONNECT HOSES TO POINTS Q AND R TOGETHER USING P/N HP117 TUBE CONNECTOR. CONNECT 270 ML FIXED VOLUME CONTAINER (9492 OR EQUIVALENT) TO HP57 LUER FITTING ON BOARD ASSEMBLY. CONNECT HAND VACUUM PUMP WITH 0-100 IN-H2O VACUUM GAUGE TO THE PUMP EXHAUST (OUT) PORT. APPLY A 50 IN-H2O VACUUM USING HAND PUMP. RE-PUMP AS NECESSARY TO STABILIZE THE READING AT APPROXIMATELY 50. IF READING WILL NOT STABILIZE AFTER SEVERAL TRIES, VERIFY THE DROP IN VACUUM (STARTING AT APPROXIMATELY 50 IN-H2O) DOES NOT EXCEED 3 IN-H2O IN 10 SECONDS.

19. USING INDELIBLE INK OF CONTRASTING COLOR, PRINT ASSEMBLY NUMBER, REVISION & LOT NUMBER IN SPACE PROVIDED, ON SOLDER SIDE.

20. ROUTE TO INSPECTION & THEN TO TEST FOR PRELIMINARY FUNCTIONAL TEST.

21. PLUG PRE-TESTED P/N AS158 ANALYZER BOARD (ITEM 2) INTO AB117A PCA. SECURE USING THREE EACH P/N HS53 SPACER (ITEM 4), P/N NS57 SCREW (ITEM 5) & P/N N009 NUT (ITEM 6).

22. CONNECT TUBES TO POINT Q AND R ON AS158 ASSEMBLY.

23. REPEAT LEAK TEST.

24. ROUTE TO INSPECTION & THEN TO TEST FOR CALIBRATION. P/N AM62 PROM SET (ITEM 18) TO BE ADDED AT CALIBRATION.

REV.	DESCRIPTION	BY	DATE
C	PER ECN #9026	CHY	3SEP02
B	PER ECN #7729	CHY	17NOV00
A	RELEASED, ECN #7512	KCO	5JAN00

THIS DOCUMENT IS CONFIDENTIAL AND PROPRIETARY AND IS THE SOLE PROPERTY OF INVIVO RESEARCH INCORPORATED (IRI). IT IS NOT TO BE DISCLOSED TO ANY PARTY, REPRODUCED OR USED IN ANY OTHER MANNER WITHOUT WRITTEN CONSENT OF SAID COMPANY. INVIVO RESEARCH INC. MAINTAINS THE RIGHT TO CHANGE SPECIFICATIONS AT ANY TIME WITHOUT PRIOR NOTICE.

UNLESS OTHERWISE SPECIFIED TOLERANCES ARE
.XX = ± .06
.XXX = ± —
ANGLES = ± —

DRAWN	KCO	4JAN00
DESIGNED	RLM	21DEC99
CHECKED		
APPROVED		

INCHES — THIRD ANGLE PROJECTION

DO NOT SCALE THIS DRAWING !!!

INVIVO RESEARCH, INC.
12601 RESEARCH PARKWAY., ORLANDO, FL 32826

TITLE: ASSEMBLY: AS159A
ASSY, ANESTH. AGENT ANALYZER MODULE

CAD SCALE:	SHEET:	DWG. NO.:	REV.:
1 : 1	1 of 3	C94C859	C

ECN8242

LF20 REV. B

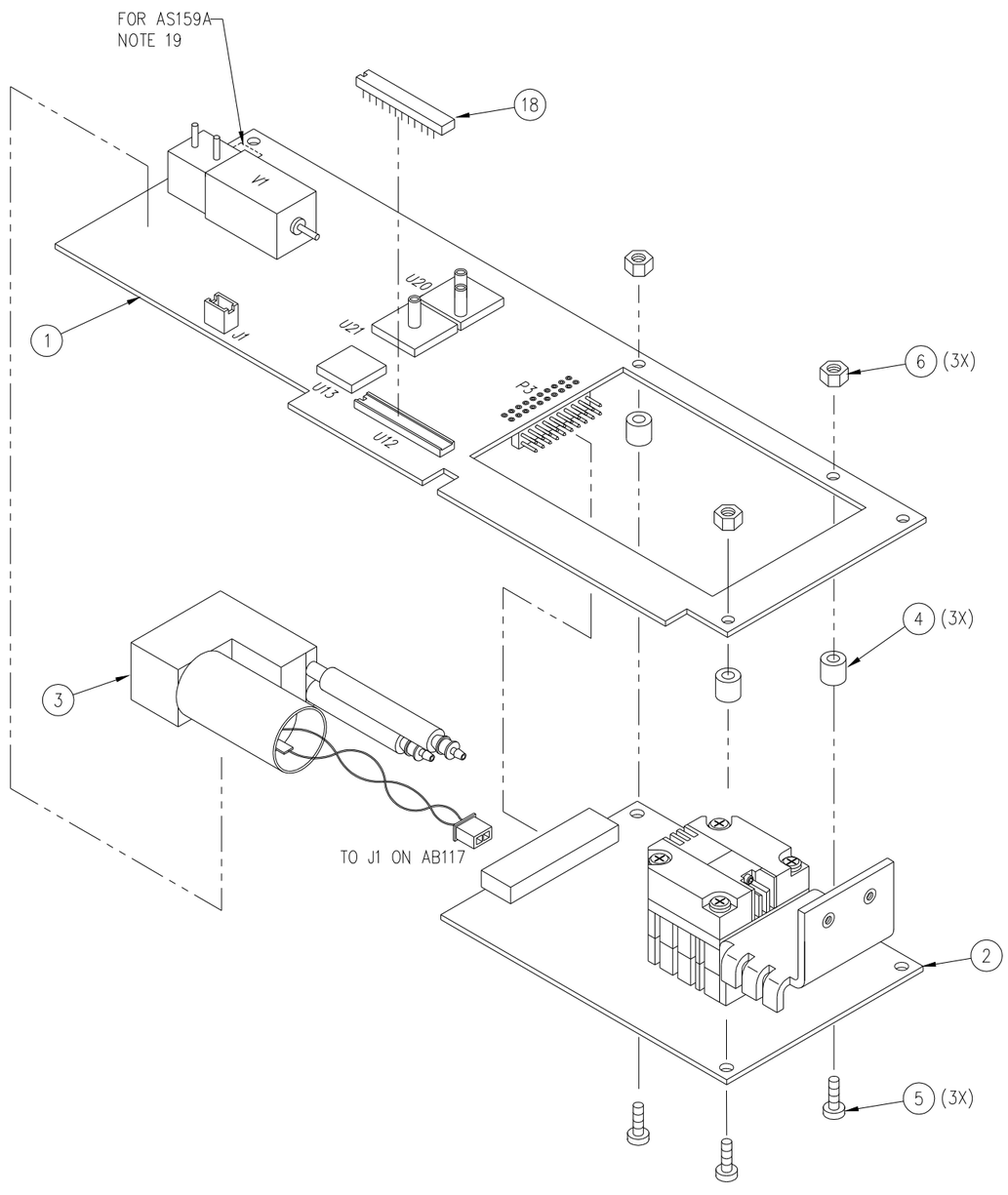

ITEM / REF. DES.	PART NO.	QTY.	DESCRIPTION
19	M202	A/R	ADHESIVE, (BLACK) LOCTITE 410
18	AM62	1	PROM SET, PNEU. CONT. AGENT ID, 3500
17	HP127	3	ELBOW, 1/8 BARB, PVDF
16	HP64	1	ORIFICE, FLOW CONTROL, .012
15	HP57A	1	LOCKING NUT, NYLON
14	HP57	1	FITTING, MALE, LOCKING LUER, 1/16 BARB
13	M207	A/R	PRIMER, LOCTITE 770
12	HP119	3	TUBE CLAMP, 1/8, ONE EAR
11	HP117	1	FITTING, 1/16 TUBE CONNECTOR, PVDF
10	HP116	4.80	TUBING, VITON, 1/8 ID X 1/4 OD
9	HP115	30.12	TUBING, VITON, 1/16 ID X 1/8 OD
8	HP114	3	FITTING, 1/8 X 1/16 REDUCER CONN. PVDF
7	HP113	3	FITTING, 1/16 TEE TUBE CONNECTOR, PVDF
6	N009	3	NUT, HEX, #4-40, NY
5	NS57	3	SCREW, #4-40 X 1/2 LG, PHMS-NY
4	HS53	3	SPACER, #4 X .188 O.D. X .238 LG. - NY
3	AP49A	1	ASSY, PUMP, AGENTS, 3155A
2	AS158	1	ASSY, ANESTH AGENT ANALYZER BD
1	AB117A	1	PCA, AGENTS PNEUMATICS CNTRLR., 3155A

UNLESS OTHERWISE SPECIFIED TOLERANCES ARE
.XX = ± .06
.XXX = ± —
ANGLES = ± —

DRAWN	KCO	4JAN00
DESIGNED	RLM	21DEC99
CHECKED		
APPROVED		

INVIVO RESEARCH, INC.
12601 RESEARCH PARKWAY., ORLANDO, FL 32826

TITLE:
ASSEMBLY: AS159A
ASSY, ANESTH. AGENT ANALYZER MODULE

INCHES — THIRD ANGLE PROJECTION

DO NOT SCALE THIS DRAWING !!!

CAD SCALE:	SHEET:	DWG. NO.:	REV.:
1 : 1	2 of 3	C94C859	C

THIS DOCUMENT IS CONFIDENTIAL AND PROPRIETARY AND IS THE SOLE PROPERTY OF INVIVO RESEARCH INCORPORATED (IRI). IT IS NOT TO BE DISCLOSED TO ANY PARTY, REPRODUCED OR USED IN ANY OTHER MANNER WITHOUT WRITTEN CONSENT OF SAID COMPANY. INVIVO RESEARCH INC. MAINTAINS THE RIGHT TO CHANGE SPECIFICATIONS AT ANY TIME WITHOUT PRIOR NOTICE.

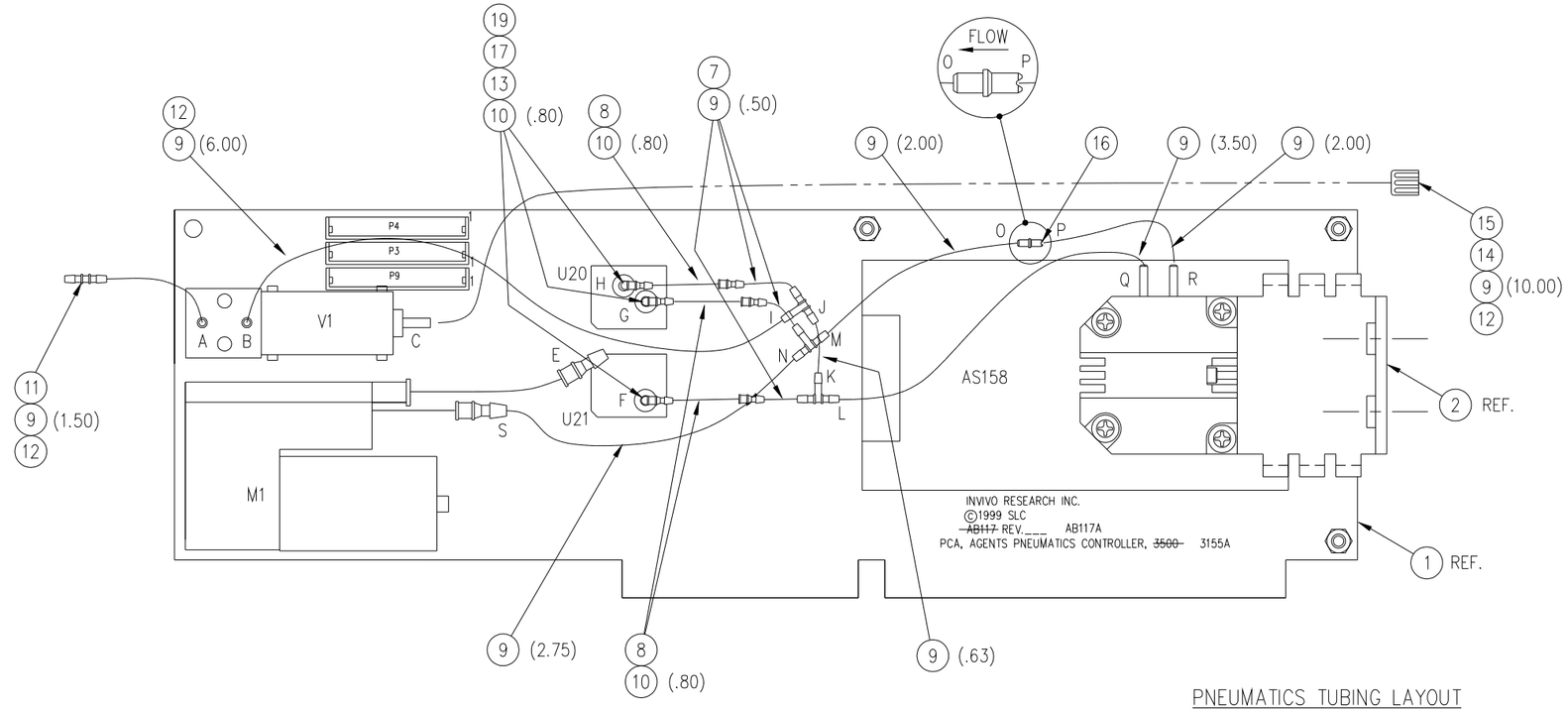

PNEUMATICS TUBING LAYOUT

CAD SCALE 1.5:1

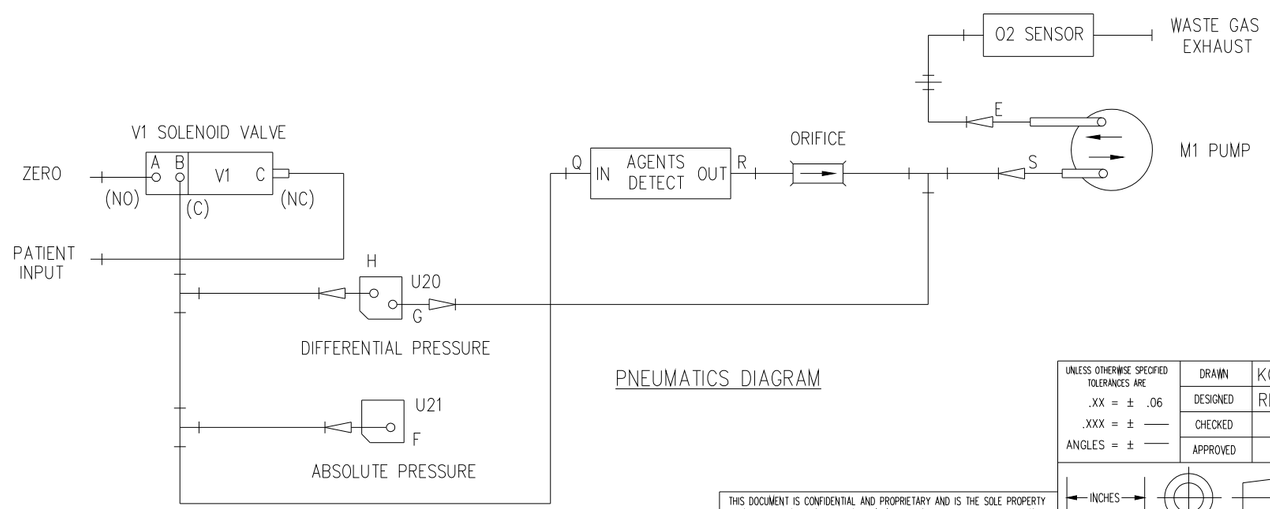

PNEUMATICS DIAGRAM

UNLESS OTHERWISE SPECIFIED TOLERANCES ARE			
.XX = ± .06	DRAWN	KCO	4JAN00
.XXX = ± ——	DESIGNED	RLM	21DEC99
ANGLES = ± ——	CHECKED		
	APPROVED		

INCHES — THIRD ANGLE PROJECTION

DO NOT SCALE THIS DRAWING !!!

THIS DOCUMENT IS CONFIDENTIAL AND PROPRIETARY AND IS THE SOLE PROPERTY OF INVIVO RESEARCH INCORPORATED (IRI). IT IS NOT TO BE DISCLOSED TO ANY PARTY, REPRODUCED OR USED IN ANY OTHER MANNER WITHOUT WRITTEN CONSENT OF SAID COMPANY. INVIVO RESEARCH INC. MAINTAINS THE RIGHT TO CHANGE SPECIFICATIONS AT ANY TIME WITHOUT PRIOR NOTICE.

INVIVO RESEARCH, INC.
12601 RESEARCH PARKWAY., ORLANDO, FL 32826

TITLE:
ASSEMBLY: AS159A
ASSY, ANESTH. AGENT ANALYZER MODULE

CAD SCALE:	SHEET:	DWG. NO.:	REV.:
1 : 1	3 of 3	C94C859	C

ECN8242

LF20 REV. B

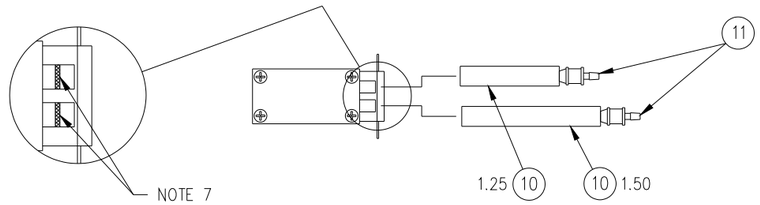

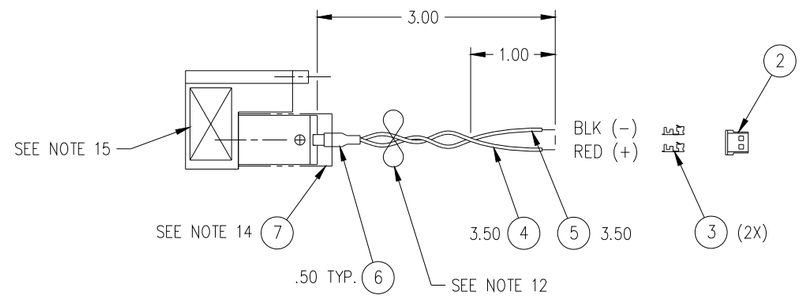

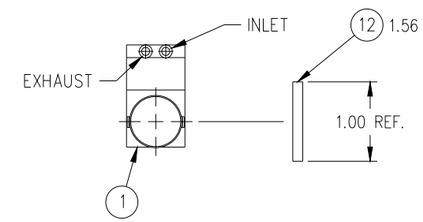

NOTES:

1. CUT WIRES (ITEMS 4 & 5) TO 3.50 LENGTH EACH.
2. STRIP WIRES ON ONE END PER AI046 FOR P/N PT28 CONTACT (ITEM 3).
3. STRIP & TIN OTHER END OF EACH WIRE .250.
4. CRIMP P/N PT28 CONTACTS ONTO UNTINNED END OF EACH WIRE.
5. ROUTE TO INSPECTION.
6. J-HOOK TINNED END OF WIRES AND SOLDER TO P/N HP111 PUMP MOTOR TERMINALS (ITEM 1), ENSURING BLACK TO NEGATIVE & RED TO POSITIVE.
7. APPLY A SMALL AMOUNT OF P/N M202 ADHESIVE TO P/N HP111 PUMP AS SHOWN IN ENLARGED DETAIL.
8. CUT 1.25 LENGTH OF P/N HP138 1/8 ID TUBING. INSERT P/N HP114 REDUCER (ITEM 11) INTO ONE END AND CONNECT TO P/N HP111 PUMP INLET PORT AS SHOWN.
9. CUT 1.50 LENGTH OF P/N HP138 1/8 ID TUBING. INSERT P/N HP114 REDUCER (ITEM 11) INTO ONE END AND CONNECT TO P/N HP111 PUMP EXHAUST PORT AS SHOWN.
10. ROUTE TO INSPECTION.
11. SLIDE .50 PIECE OF P/N WT01 HEAT SHRINK (ITEM 6) ONTO WIRES & COMPLETELY OVER PUMP MOTOR TERMINALS AND SHRINK IN PLACE.
12. TWIST WIRES TOGETHER APPROXIMATELY TWO TURNS PER INCH.
13. INSERT TERMINATED WIRES INTO P/N PA195 HOUSING (ITEM 2).
14. SLIP P/N HM50CH SHIELD (ITEM 7) OVER WIRES AND PUMP MOTOR AS SHOWN, AND SECURE IN PLACE WITH P/N M008A RTV (ITEM 8).
15. USING A PERMANENT MARKER OF CONTRASTING COLOR, PRINT ASSEMBLY NUMBER, REVISION, LOT NUMBER & ASSEMBLER INITIALS IN AREA SHOWN.
16. PRESSURE TEST PUMP TO 50/70 mm-Hg MAX. NO MORE THAN 4 mm-Hg DROP IN 10 SECONDS.
17. ROUTE TO INSPECTION.

ITEM / REF. DES.	PART NO.	QTY.	DESCRIPTION
12	M000D	1.56	TAPE OPEN CL. FM., DS, .13 THK. x 1.0 W
11	HP114	2	FTG, 1/8 x 1/16 REDUCER CONN., PVDF
10	HP138	2.75	TUBING, VITON, 1/8 I.D. x 3/16 O.D.
9	M202	REF.	ADHESIVE, (BLACK) LOCTITE 410
8	M008A	REF.	ADHESIVE,/SEALANT, RTV, CLEAR, 732
7	HM50CH	1	SHIELD, PUMP, 3155A
6	WT01	1.00	HEAT SHRINK TUBING, BLACK, 1/8 ID
5	W047	3.50	WIRE, 26 GA, 19 X 38, BLK, UL-1429
4	W038	3.50	WIRE, 26 GA, 19 X 38, RED, UL-1429
3	PT28	2	CONTACT, CRIMP SOCKET, 22-28 AWG
2	PA195	1	CONN, 2P, SR, HSG, ST. .098 CTRS.
1	HP111	1	MICRO-PUMP, VITON, 12 VDC

REV.	DESCRIPTION	BY	DATE
C	PER ECN #9121	SR	13NOV02
B	PER ECN #8287	CHY	17MAY01
A	RELEASED, ECN #7512	KCO	19AUG98

THIS DOCUMENT IS CONFIDENTIAL AND PROPRIETARY AND IS THE SOLE PROPERTY OF INVIVO RESEARCH INCORPORATED (IRI). IT IS NOT TO BE DISCLOSED TO ANY PARTY, REPRODUCED OR USED IN ANY OTHER MANNER WITHOUT WRITTEN CONSENT OF SAID COMPANY. INVIVO RESEARCH INC. MAINTAINS THE RIGHT TO CHANGE SPECIFICATIONS AT ANY TIME WITHOUT PRIOR NOTICE.

UNLESS OTHERWISE SPECIFIED TOLERANCES ARE
.XX = ± .50
.XXX = ± .250
ANGLES = ± 1°

DRAWN	KCO	4JAN00
DESIGNED	RLM	20DEC99
CHECKED		
APPROVED		

INCHES — THIRD ANGLE PROJECTION

DO NOT SCALE THIS DRAWING !!!

Invivo Research Inc.
PRECISION BIOMEDICAL INSTRUMENTS
Subsidiary of Invivo Corporation
12601 RESEARCH PARKWAY., ORLANDO, FL 32826

TITLE:
ASSEMBLY: AP49A
ASSEMBLY, PUMP, AGENTS - 3155A

CAD SCALE:	SHEET:	DWG. NO.:	REV.:
1 : 1	1 of 1	C94C862	C

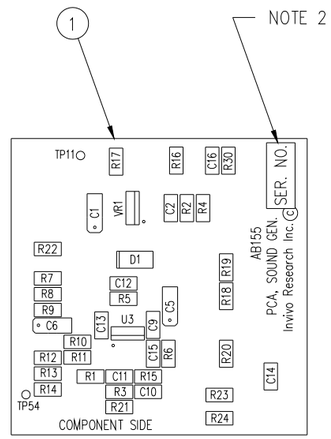

COMPONENT SIDE

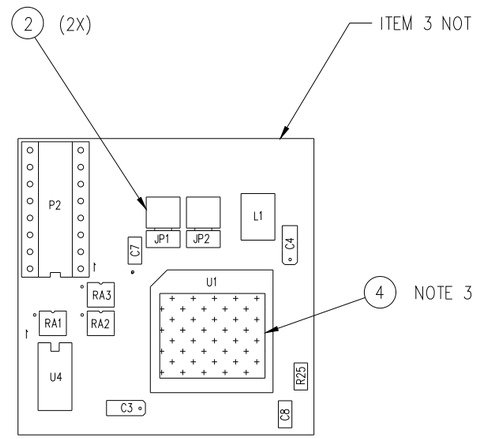

SOLDER SIDE

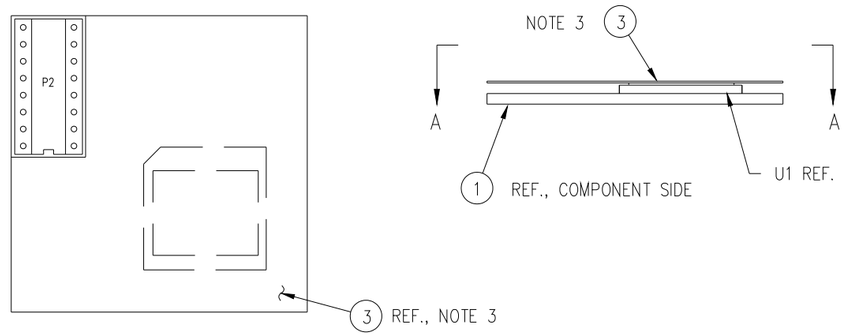

VIEW A–A

ITEM / REF. DES.	PART NO.	QTY.	DESCRIPTION
4	M000	.75	TAPE, OPN. CL. FOAM, DS, .06 THK. x .38 W
3	HI62	1	INSULATOR, SOUND GENERATOR MOD PCA
2	PA66	2	SHUNT, 2 POSITION, .10 CTRS.
JP1, JP2	PA41	2	HEADER, 2P, SR, RA, .10 CTRS.
L1	TX01	1	INDUCTOR, 100UH, 100MA, SMT
R14	RX356	1	RES., 1.3MEG, 1%, .10W, 100PPM, 0805
R13	RX355	1	RES., 649K, 1%, .10W, 100PPM, 0805
R11	RX354	1	RES., 162K, 1%, .10W, 100PPM, 0805
R10	RX353	1	RES., 80.6K, 1%, .10W, 100PPM, 0805
R9	RX352	1	RES., 40.2K, 1%, .10W, 100PPM, 0805
R5, R21	RX351	2	RES., 4.99K, 1%, .10W, 100PPM, 0805
R2	RX350	1	RES., 16.9K, 1%, .10W, 100PPM, 0805
R6	RX335	1	RES., 16.5K, 1%, .10W, 100PPM, 0805
R12	RX322	1	RES., 324K, 1%, .10W, 100PPM, 0805
R1	RX290	1	RES., 133K, 1%, .10W, 100PPM, 0805
R4,7,16,17, 18,20,22	RX250	7	RES., 10K, 1%, .10W, 100PPM, 0805
R15,19,23, 24,25,30	RX243	6	RES., 1K, 1%, .10W, 100PPM, 0805
R8	RX236	1	RES., 20K, 1%, .10W, 100PPM, 0805
R3	RX232	1	RES., 200K, 1%, .10W, 100PPM, 0805
RA1–3	RS20	3	RES., ARRAY, 100 OHM
P2	PA430	1	HEADER, DUAL INLINE, ADAPTER, DIP–16
VR1	IRX03	1	IC, ADJ., MICROPWR, VOLT. REG., 2951
U3	ILX22	1	IC, OP–AMP, DUAL LO–P, LM6142AIM
U1	ICX90	1	IC, PLD, EP1K30, 144PIN, TQFP
U4	AM68	1	IC, CONFIGURATION DEVICE, EPC1, DIP–8
D1	DDX01	1	DIODE, SIGNAL, LEADLESS, MELF, 500MW
C1, 3–6	CXT19	5	CAP., 4.7UF, 10%, 16V, TANT., 3216
C16	CX82	1	CAP., 1000PF, 5%, 50V, X7R, 0805
C12	CX81	1	CAP., 22PF, 5%, 50V, X7R, 0805
C15	CX69	1	CAP., 100PF, 10%, 50V, COG, 0805
C2	CX59	1	CAP., .01UF, 10%, 50V, X7R, 0805
C7–11,13,14	CX51	7	CAP., .1UF, 10%, 50V, X7R, 0805
1	B209	1	PCB, SOUND GENERATOR MODULE REV–B

NOTES

1. WORKMANSHIP TO CONFORM TO IPC CLASS II REQUIREMENTS.
2. BOARD REQUIRES SERIALIZED LABELING WITH THE FOLLOWING INFORMATION:
   UNIQUE SERIAL NO., ASSEMBLY P/N & CURRENT REV. LEVEL.
   PLACE SERIAL NUMBER LABEL IN THIS AREA, ORIENT AS SHOWN.
3. APPLY A .75 LENGTH OF P/N M000 DOUBLE SIDED FOAM TAPE (ITEM 4) TO P/N ICX90 IC (REF. DES. U1). ATTACH P/N HI62 FIBERGLASS INSULATOR (ITEM 3) TO THE TAPE ON U1 AS SHOWN IN VIEW A–A.

REV.	DESCRIPTION	BY	DATE
D	PER ECN #8304	CHY	19APR01
C	PER ECN #8279	CHY	29MAR01
B	PER ECN #8208	JRS	9FEB01
A	RELEASE PER ECN #7921	ALH	23JAN01

THIS DOCUMENT IS CONFIDENTIAL AND PROPRIETARY AND IS THE SOLE PROPERTY OF INVIVO RESEARCH INCORPORATED (IRI). IT IS NOT TO BE DISCLOSED TO ANY PARTY, REPRODUCED OR USED IN ANY OTHER MANNER WITHOUT WRITTEN CONSENT OF SAID COMPANY. INVIVO RESEARCH INC. MAINTAINS THE RIGHT TO CHANGE SPECIFICATIONS AT ANY TIME WITHOUT PRIOR NOTICE.

UNLESS OTHERWISE SPECIFIED TOLERANCES ARE
.XX = ±
.XXX = ±
ANGLES = ±

DRAWN	ALH	14AUG00
DESIGNED	SF	21JUL00
CHECKED		
APPROVED		

INCHES

THIRD ANGLE PROJECTION

DO NOT SCALE THIS DRAWING !!!

Invivo Research Inc.
PRECISION BIOMEDICAL INSTRUMENTS
Subsidiary of Invivo Corporation
12601 RESEARCH PARKWAY., ORLANDO, FL 32826

TITLE:
ASSEMBLY: AB155
PCA, SOUND GENERATOR MODULE

CAD SCALE:	SHEET:	DWG. NO.:	REV.:
1 : 1	1 of 1	C94C870	D

ECN5877

LF20 REV. A

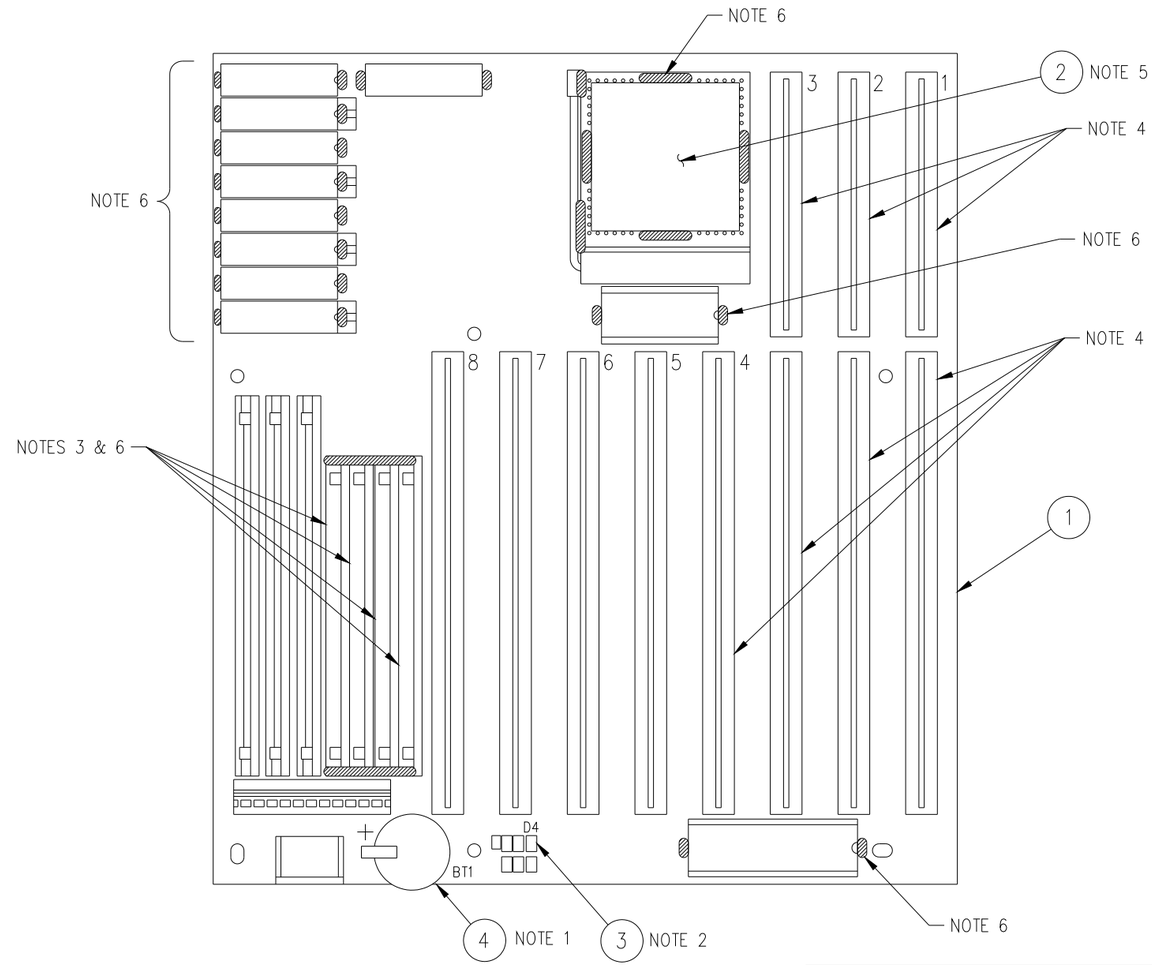

NOTES

1. REMOVE BATTERY AND/OR BATTERY HOLDER FROM REF. DES. BT1. OBSERVING PROPER POLARITY, SOLDER P/N HB12 BATTERY (ITEM 4) IN PLACE. PLACE SMALL AMOUNT OF P/N M008A RTV (ITEM 6) UNDER BATTERY ENSURING THE RTV CONTACTS BOTH THE BATTERY AND THE BOARD.
2. REMOVE DIODE FROM REF. DES. D4 AND REPLACE WITH P/N DDX11 DIODE (ITEM 3).
3. REMOVE 30 PIN RAM SIMMS FROM SOCKETS (4 PLACES). APPLY TWO COATS OF P/N M216 ANTI-OXIDIZER (ITEM 5) TO 30 PIN RAM SIMM SOCKETS AND TO RAM SIMMS PCA EDGE FINGERS. THEN REPLACE 30 PIN RAM SIMMS.
4. APPLY TWO COATS OF P/N M216 ANTI-OXIDIZER (ITEM 5) TO CONNECTORS AS INDICATED.
5. OBSERVING PROPER POLARITY, INSERT P/N IC98 MP (ITEM 2) INTO SOCKET.
6. APPLY P/N M008A RTV (ITEM 6) APPROX. AS SHOWN TO ALL AREAS INDICATED BY ▨. BE SURE RTV CONTACTS BOTH SOCKET OR CONNECTOR AND INSERTED COMPONENT.

ITEM / REF. DES.	PART NO.	QTY.	DESCRIPTION
6	M008A	A/R	ADHESIVE/SEALANT, RTV, CLEAR, 732
5	M216	A/R	ANTI-OXIDIZER, ENVI-RO-TECH PC
4	HB12	1	BATTERY, 3V, LITHIUM, PCB MOUNT, 2 PRONG
3	DDX11	1	DIODE, SCHOTTKY, BARRIER, 50V, BAS86
2	IC98	1	I.C., 168P-PGA, 486DX2/66+MHz MP
1	AB88A	1	PCA, PC/AT MOTHERBOARD LESS PROCESSOR

REV.	DESCRIPTION	BY	DATE
A	RELEASED, ECN #8082	CHY	1DEC00

THIS DOCUMENT IS CONFIDENTIAL AND PROPRIETARY AND IS THE SOLE PROPERTY OF INVIVO RESEARCH INCORPORATED (IRI). IT IS NOT TO BE DISCLOSED TO ANY PARTY, REPRODUCED OR USED IN ANY OTHER MANNER WITHOUT WRITTEN CONSENT OF SAID COMPANY. INVIVO RESEARCH INC. MAINTAINS THE RIGHT TO CHANGE SPECIFICATIONS AT ANY TIME WITHOUT PRIOR NOTICE.

UNLESS OTHERWISE SPECIFIED TOLERANCES ARE
.XX = ± .02
.XXX = ± .010
ANGLES = ± 1°

DRAWN	CHY	1DEC00
DESIGNED	MC	1DEC00
CHECKED		
APPROVED		

INCHES — THIRD ANGLE PROJECTION

DO NOT SCALE THIS DRAWING !!!

Invivo Research Inc.
PRECISION BIOMEDICAL INSTRUMENTS
Subsidiary of Invivo Corporation
12601 RESEARCH PARKWAY., ORLANDO, FL 32826

TITLE: ASSEMBLY: AB88
PCA, PC/AT MOTHERBOARD w/MPRCSR.

CAD SCALE:	SHEET:	DWG. NO.:	REV.:
1 : 1	1 of 1	C94C897	A

ECN5877

LF20 REV. A

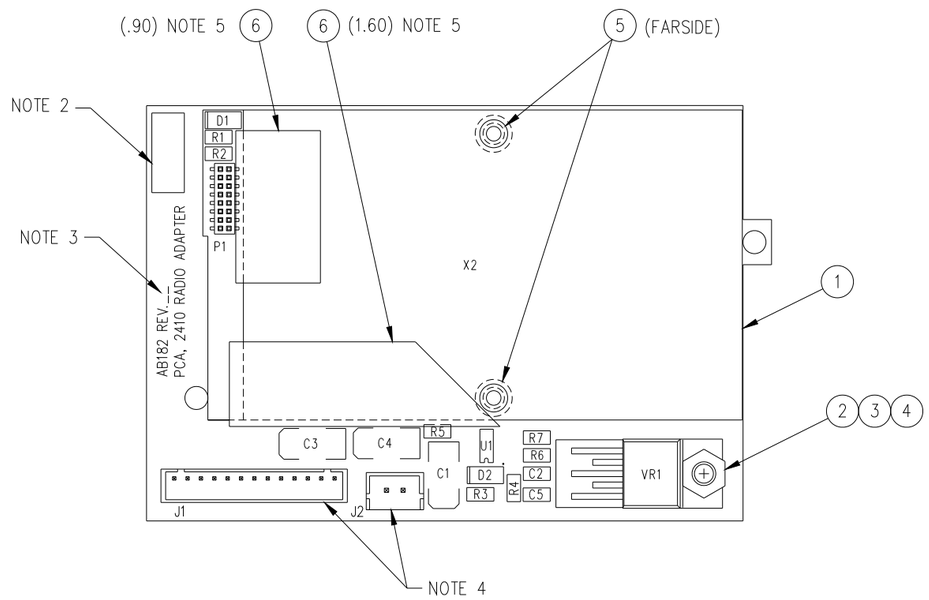

NOTES

1. WORKMANSHIP TO CONFORM TO IPC CLASS II REQUIREMENTS.
2. BOARD REQUIRES SERIALIZED LABELING WITH THE FOLLOWING INFORMATION: UNIQUE SERIAL NO., ASSEMBLY P/N AND CURRENT REV. LEVEL.
3. USING INDELIBLE INK IN CONTRASTING COLOR, PLACE CURRENT ASSEMBLY REVISION IN SPACE PROVIDED.
4. TRIM LEADS FLUSH ON SOLDER SIDE.
5. CUT 2 PIECES OF P/N M088A KAPTON TAPE (ITEM 4) TO LENGTH INDICATED. TRIM THE LONGER PIECE AT ANGLE AS SHOWN. ORIENT AND PLACE THE TAPE AS SHOWN, ENSURING COMPLETE COVERAGE OF TRACE(S) THAT ARE VERY NEAR OR INSIDE THE RADIO SILKSCREEN.

ITEM / REF. DES.	PART NO.	QTY.	DESCRIPTION
6	M088A	2.50	TAPE, KAPTON, .004 THK., x 1/2" W ROLL
5	NC06	2	NUT, CAPTIVE, #2-56, KF2-256
4	N002	1	NUT, HEX, #4-40, ZINC
3	NW09	1	LOCKWASHER, INT. TOOTH, #4, SS
2	NS04	1	SCR., #4-40 x 1/4 LG., PHMS-XR, ZN
R7	RX315	1	RES., 681 OHM, 1%, .1W, 100 PPM, 0805
R6	RX221	1	RES., 150 OHM, 5%, .10W, 150 PPM, 0805
R5	RX243	1	RES., 1K, 1%, .1W, 100 PPM, 0805
R4	RX222	1	RS., 2K, 5%, .1W, 200 PPM, 0805
R3	RX375	1	RES., 49.9K, 1%, .10W, 100 PPM, 0805
R2	RX236	1	RES., 20K, 1%, .10W, 100 PPM, 0805
R1	RX250	1	RES., 10K, 1%, .1W, 100 PPM, 0805
J2	PA348	1	CONN, 2P, SR, HDR, ST, SHRD, .098 CTRS
J1	PA346	1	CONN, 13P, SR, HDR, ST, SHRD, .079 CTRS
VR1	IR55	1	REGULATOR, ADJUST. LOW -DRIFT, LM2941C
U1	ICX99	1	IC, UNDER VOLTAGE SENSOR
D1,2	DDX05	2	DIODE, SCHOTTKY, SM. SIGNAL, MINIMELF
C1,3,4	CXT08	3	CAP, 22UF, 20%, 16V, 7343, TANT.
C2,5	CX51	2	CAP, .1UF, 10%, 50V, X7R, 0805
P1	PA464	1	CONN., 16P, DR, LP, SCKT, .050 CTRS.
1	B238	1	PCB, 2410 RADIO ADAPTER REV. A

REV.	DESCRIPTION	BY	DATE
D	PER ECN #8602	CHY	22JAN02
C	PER ECN #8579	CHY	10JAN02
B	PER ECN #8575	CHY	14DEC01
A	RELEASED, ECN #8394	CHY	23OCT01
E	PER ECN #8674	CHY	27FEB02

THIS DOCUMENT IS CONFIDENTIAL AND PROPRIETARY AND IS THE SOLE PROPERTY OF INVIVO RESEARCH INCORPORATED (IRI). IT IS NOT TO BE DISCLOSED TO ANY PARTY, REPRODUCED OR USED IN ANY OTHER MANNER WITHOUT WRITTEN CONSENT OF SAID COMPANY. INVIVO RESEARCH INC. MAINTAINS THE RIGHT TO CHANGE SPECIFICATIONS AT ANY TIME WITHOUT PRIOR NOTICE.

UNLESS OTHERWISE SPECIFIED TOLERANCES ARE
.XX = ± .02
.XXX = ± .010
ANGLES = ± 1°

DRAWN	CHY	23OCT01
DESIGNED	SLC	23OCT01
CHECKED		
APPROVED		

INCHES — THIRD ANGLE PROJECTION

DO NOT SCALE THIS DRAWING !!!

INVIVO RESEARCH, INC.
12601 RESEARCH PARKWAY., ORLANDO, FL 32826

TITLE: ASSEMBLY: AB182
PCA, 2410 RADIO ADAPTER

CAD SCALE:	SHEET:	DWG. NO.:	REV.:
2 :1	1 of 1	C94C922	E

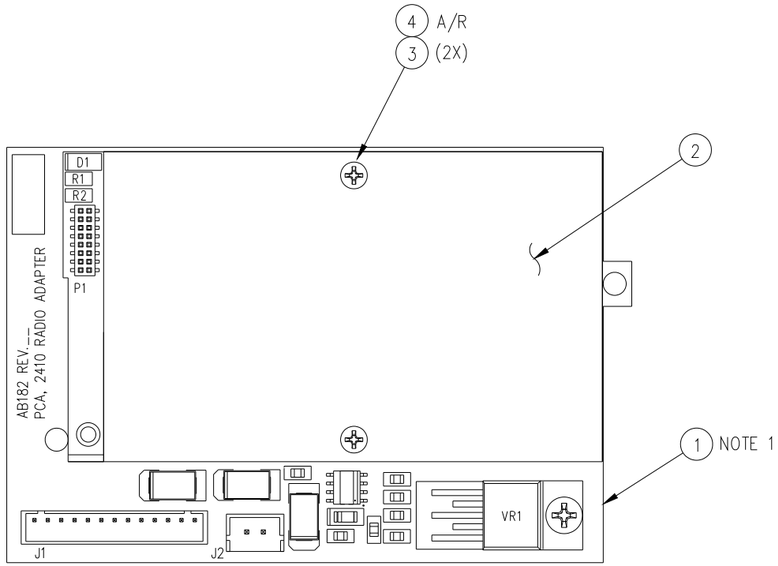

NOTES

1. P/N AB182 PCA (ITEM 1) MUST BE MOUNTED IN CERTAIN UNITS BEFORE P/N HE97 TRANSCEIVER IS SECURED USING TWO P/N NS148N SCREWS AND P/N M050 LOCTITE (ITEM 4). REFER TO ASSEMBLY DRAWING FOR UNIT WHERE AB182B IS TO BE USED.

ITEM / REF. DES.	PART NO.	QTY.	DESCRIPTION
4	M050	A/R	ADHESIVE, LOCTITE 425, BLUE ASSURE
3	NS148N	2	SCR., #2-56 x 7/16 LG., PHMS-XR, SS, NM
2	HE97	1	TRANSCEIVER, 2.4 GHZ, 460 KBPS
1	AB182	1	PCA, 2410 RADIO ADAPTER

REV.	DESCRIPTION	BY	DATE
B	PER ECN #8602	CHY	22JAN02
A	RELEASED, ECN #8394	CHY	230CT01

THIS DOCUMENT IS CONFIDENTIAL AND PROPRIETARY AND IS THE SOLE PROPERTY OF INVIVO RESEARCH INCORPORATED (IRI). IT IS NOT TO BE DISCLOSED TO ANY PARTY, REPRODUCED OR USED IN ANY OTHER MANNER WITHOUT WRITTEN CONSENT OF SAID COMPANY. INVIVO RESEARCH INC. MAINTAINS THE RIGHT TO CHANGE SPECIFICATIONS AT ANY TIME WITHOUT PRIOR NOTICE.

UNLESS OTHERWISE SPECIFIED TOLERANCES ARE
.XX = ± .02
.XXX = ± .010
ANGLES = ± 1°

DRAWN	CHY	230CT01
DESIGNED	SLC	230CT01
CHECKED		
APPROVED		

INCHES — THIRD ANGLE PROJECTION

DO NOT SCALE THIS DRAWING !!!

INVIVO RESEARCH, INC.
12601 RESEARCH PARKWAY., ORLANDO, FL 32826

TITLE:
ASSEMBLY: AB182B
ASSEMBLY, 2410 RADIO

CAD SCALE:	SHEET:	DWG. NO.:	REV.:
1 : 1	1 of 1	C94C926	B

ECN8242

LF20 REV. B