sirona
The Dental Company

TENEO

Service Manual

English

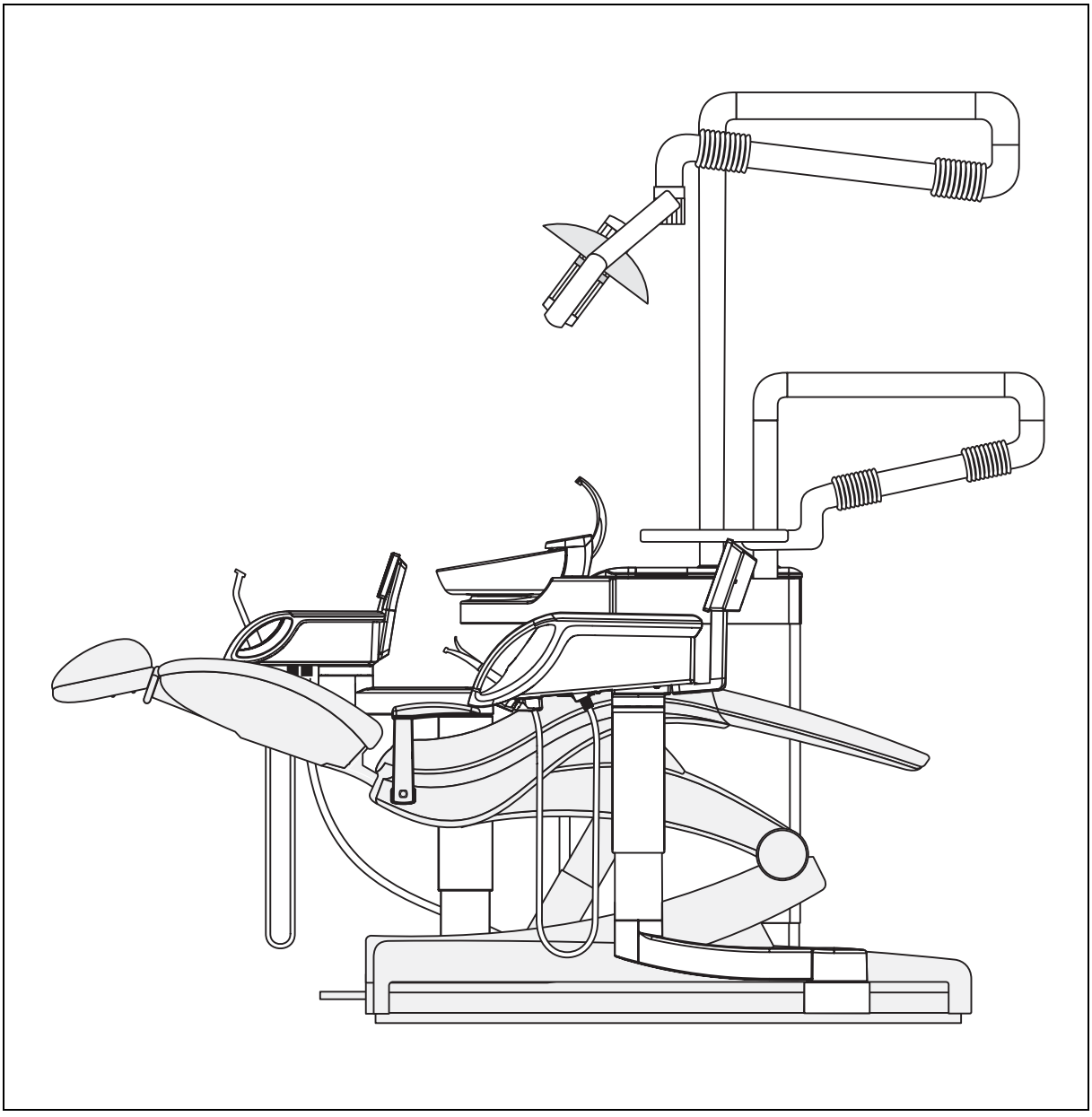

sirona
The Dental Company

TENEO

Service Manual

English

IMPORTANT:

- **In the case of faults which you are unable to eliminate with the help of this manual, please contact our Customer Service Center.**
- **It is essential that you take this service manual and a service laptop along with you on every customer call.**

Furthermore, you must always have the spare parts list and wiring diagrams with you as well.

You can download this service manual in the dealer area of the Sirona website.

Table of contents

sirona.
The Dental Company

1 Important information

TENEO

1.1 Technical data

Model designation	TENEO
Power supply	100 - 230 V 50/60 Hz, 115 V~ 50/60 Hz
Nominal current	230 V 4.8 A 115 V 9.6 A 100 V 11 A
Nominal power output:	1100 W

1.2 Warning and safety information

Caution!

Prior to opening the unit, connecting a measuring instrument or replacing parts, **switch the treatment center OFF**.

Protective ground connection

The building water supply is at protective ground potential and must not touch the fuse box of the chair.

Warning!

If there is a protective ground contact, the patient or user may be exposed to tension in the event of a fault - risk of electric shock!

Operational reliability

To ensure operational reliability, the use of mobile wireless phones in practice or hospital environments must be prohibited.

Troubleshooting:

If you encounter difficulties, search in the error catalog first and proceed according to the instructions given there.

CAUTION

When opening the unit:
Please observe the usual precautionary measures for handling printed circuit boards (ESD).
Touch a ground point to discharge static electricity before handling any components. Use an ESD wrist band.
Connect it to the protective ground wire.

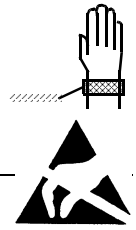

1.3 Symbols

Dentist element

Assistant element

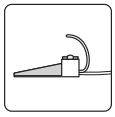

Foot control

Wireless foot control

Patient chair

Water unit

1.4 Abbreviations

AE	Dentist element
AK	Connection box
ASE	Assistant element
BHE	Dental treatment center
UI	User interface
DNA	Dürr wet suction system
PCB	Printed circuit board
FS	Foot control
FU	Wireless foot control
GND	Ground
HW	Hardware
KS	Four-way foot switch
L	Cable
LED	Light emitting diode
LK	Lumbar support cushion
MSBV	Cuspidor valve
MV	Solenoid valve
PC	Personal computer
RÖBI	X-ray image viewer
S	Switch
SDI	Sirona Dental Interface (electrical, pneumatic, hydraulic plug connection)
ST	Patient chair
SW	Software
VB	Travel track
VDC	DC voltage
WE	Water unit
X	Connector

1.5 Where to save user-specific data in the TENEO

Board Part No.		Stored settings
NAK 61 86 626		PC configuration Date of last maintenance performed: Display brightness Key click Time format Current user Number of users White screen, switchable Cursor mode Number of chair programs Manual chair setting at top level Slow travel, switchable Current timer All timer values **All values that must be stored in conjunction with implantology/endodontics:** Number of implantology levels NaCl cooling NaCl rinsing amount Instrument light Selected endodontic file system Auto-reverse Handpiece Speed Torque Endodontic file

Board Part No.		Stored settings
NWE 61 15 567		Flushing duration Tumbler filling time Tumbler heating on/off Tumbler heater temperature Sirolux brightness Amalgam separator filling level AmalgamMotor operating time SepaMotor operating time MSBV opening time Sanitation data

Board Part No.		Stored settings
NHE 61 15 583		NHE heater on/off Heater temperature Sprayvit instrument light Sprayvit instrument light lamp voltage Hydrocolloid duration

Board Part No.		Stored settings
NSA 61 15 591		Central error storage Tumbler filling on/off in S program Flushing on/off in S program SIROLUX status with chair programs # key (switch/button) Chair program 0, S, 1, 2 for dental user A-F IP address DHCP activated/deactivated Serial numbers of the motor controls Packaging position Travel track positions

Board Part No.		Stored settings
NAJ 61 28 446		Sprayvit ventilation, AE Activation times (instrument /instrument holder-dependent) Instrument settings Example: Cooling, cooling mode, light, light intensity, foot control mode, direction of rotation, NaCl cooling, speed, HF intensity, HF modulation

Board Part No.		Stored settings
DCFU 61 83 193		Minimum and maximum value of the permissible range of motion. Determined based on the reference travel. Motor parameters

1.6 Safety switches in the dental treatment center

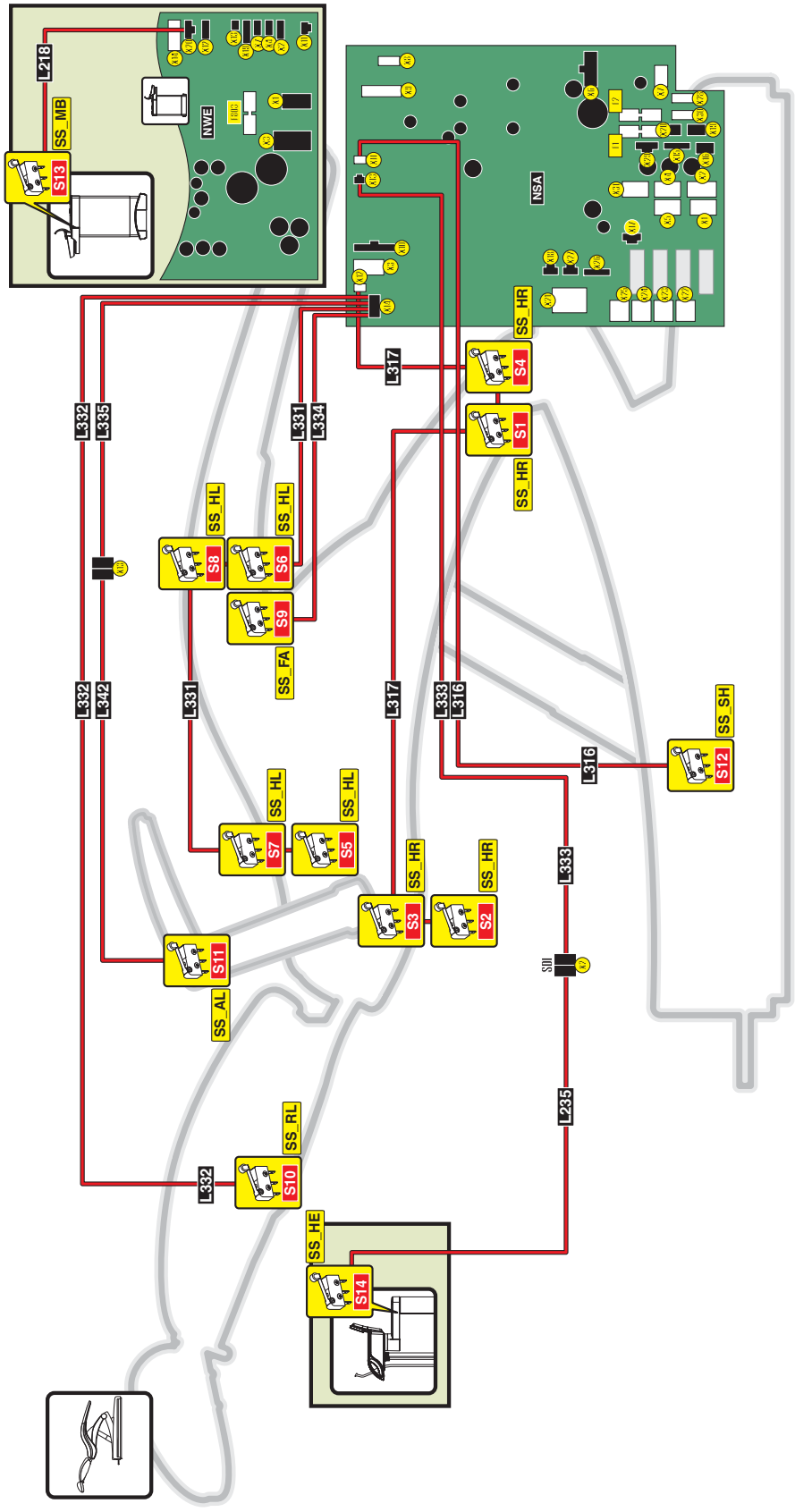

1.7 Removing the upholstery/arm rests from the patient chair

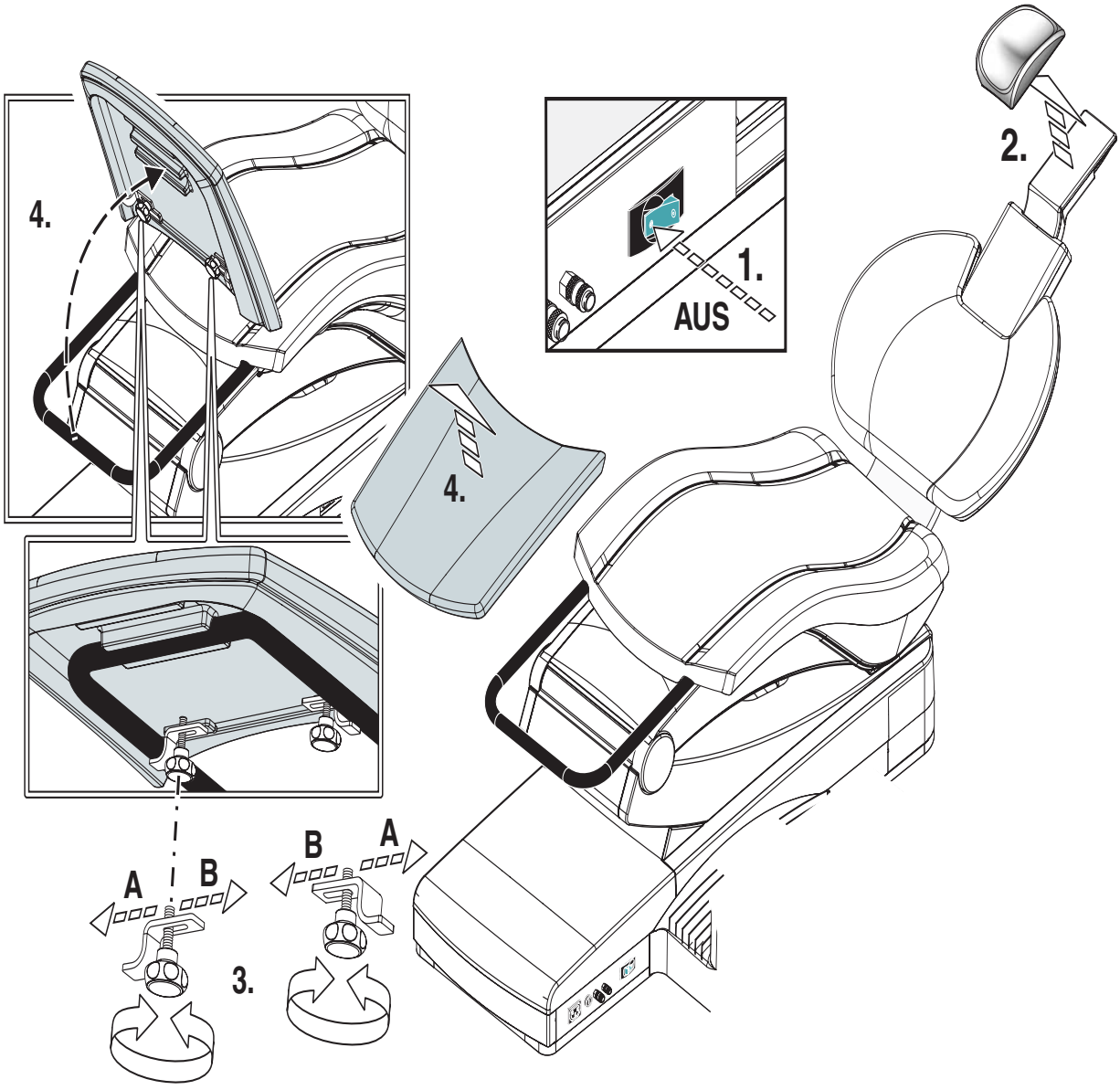

1. Turn the mains power switch **OFF**.
2. Remove the upholstery on the headrest.
3. Loosen the screws and shift the retaining bracket **B**.
   Remove the footrest.
4. Remove the seat upholstery.
5. Remove the backrest upholstery.
6. Pull off the backrest cover.
7. Press the release button on the armrest and pull out the armrest.

1.8 Removing the cover panels of the patient chair

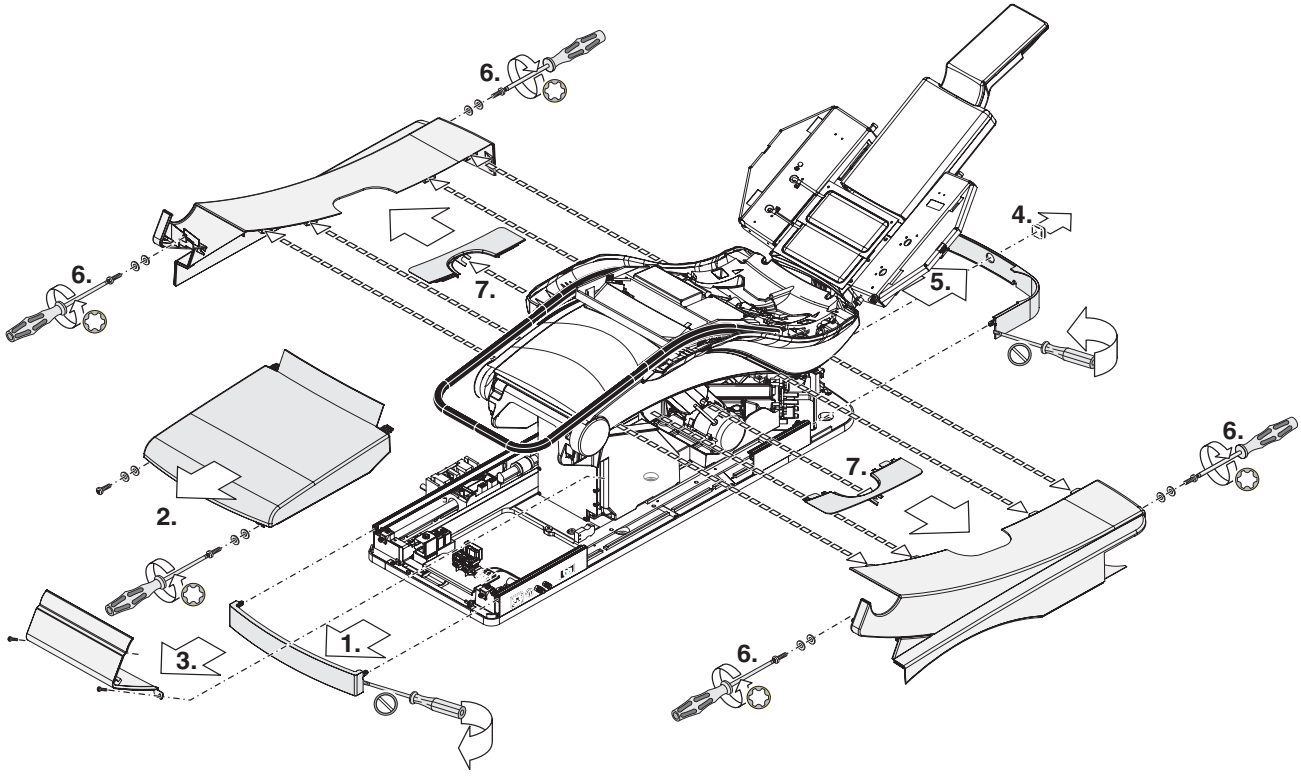

1. Remove the front faceplate of the base.
   The faceplate is fitted on the lateral covers (if necessary, carefully pry them apart with a screwdriver).
2. Unscrew the two screws (with washers) at the front of the cover.
   Take off the cover.
3. Unscrew the two screws of the cover. Remove the cover (snap).
4. Pull off the small bellows from the four-way foot switch (if present).
5. Remove the rear faceplate of the base. The faceplate is fitted on the lateral guide rails (if necessary, carefully pry them apart with a screwdriver).
6. Remove the four screws of the side panels of the stand and remove the covers.
7. Pull off the right and left covers.

1.9 Removing the cover panels of the support arm of the

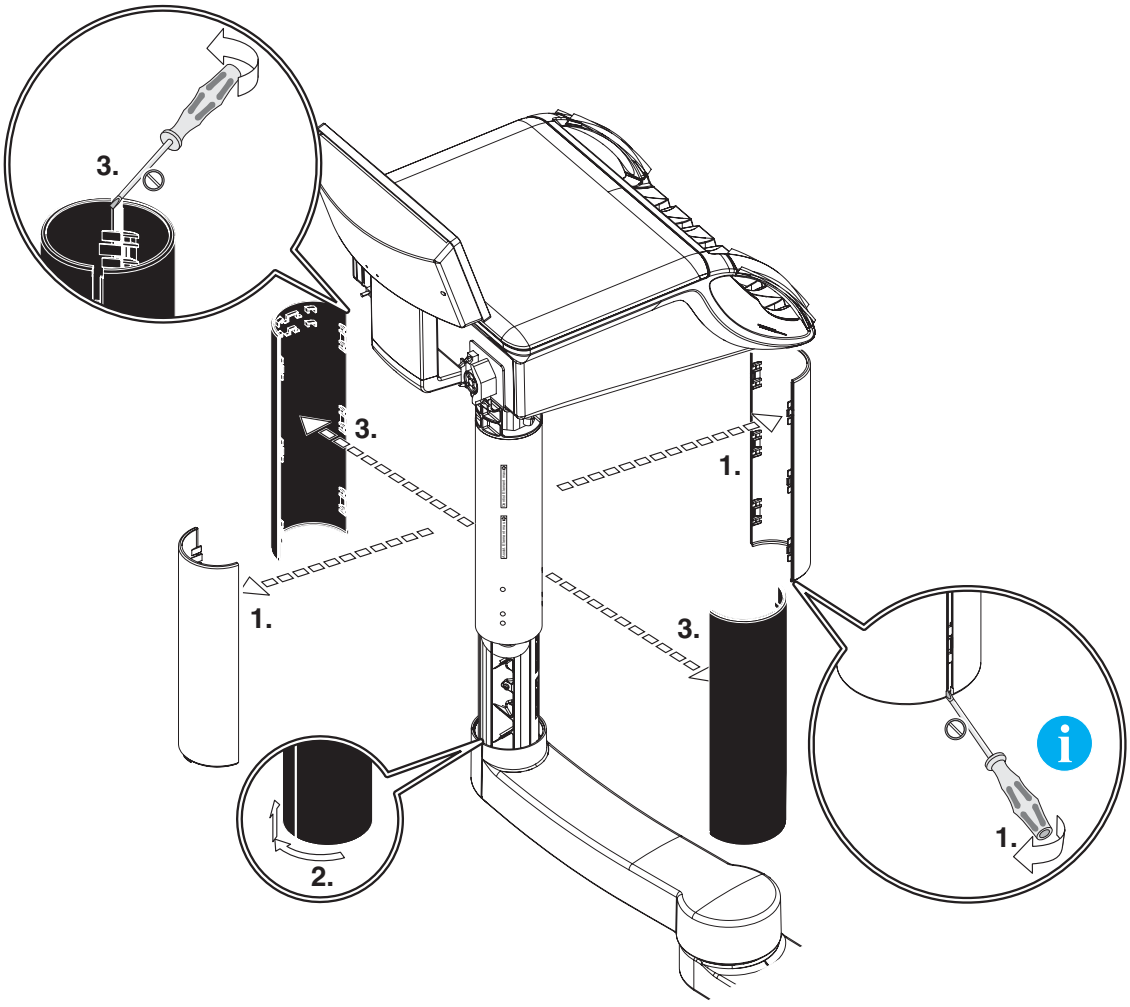

dentist element.

1. Remove the outer half-shell covers.
2. Detach the inner half-shell covers from the bayonet connector and move them upward.
3. Remove the inner half-shell covers.

1.10 Opening the dentist element

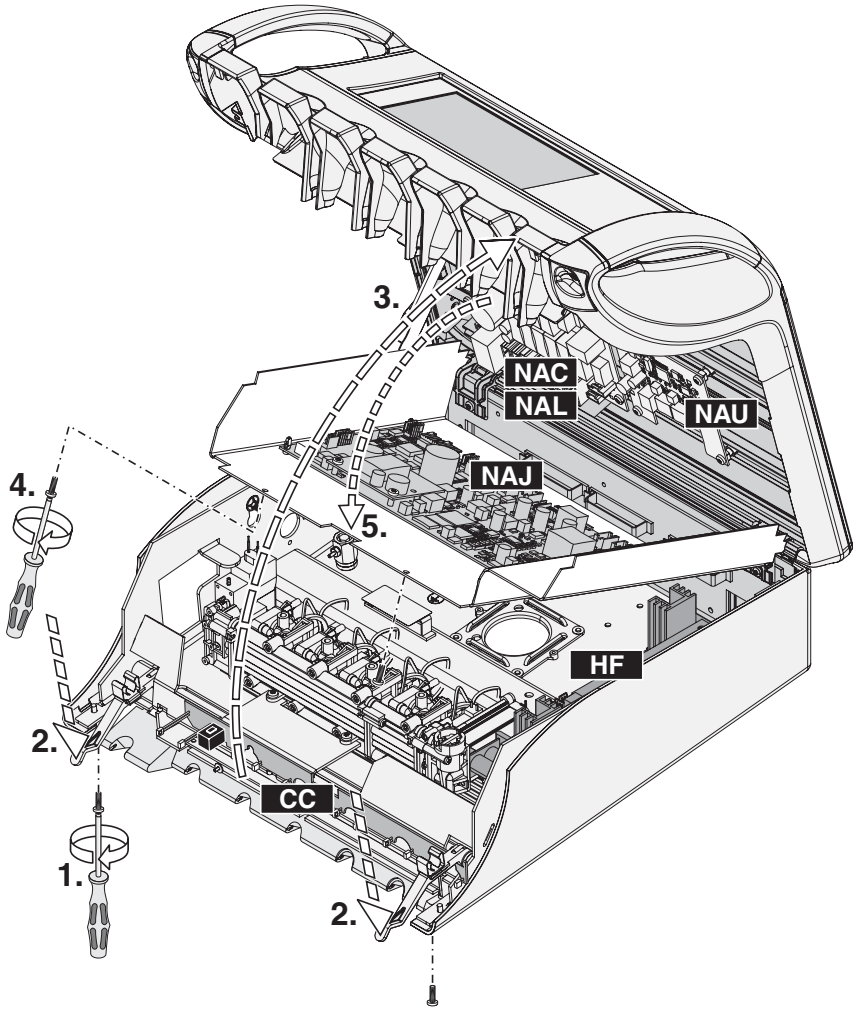

1. Unscrew the two screws.
2. Press the locking bar.
3. Lift the cover upwards and let it lock it into the upright position.
4. Unscrew two screws and
5. fold down the PCB holder plate.

1.11 Removing the user interface on the dentist element

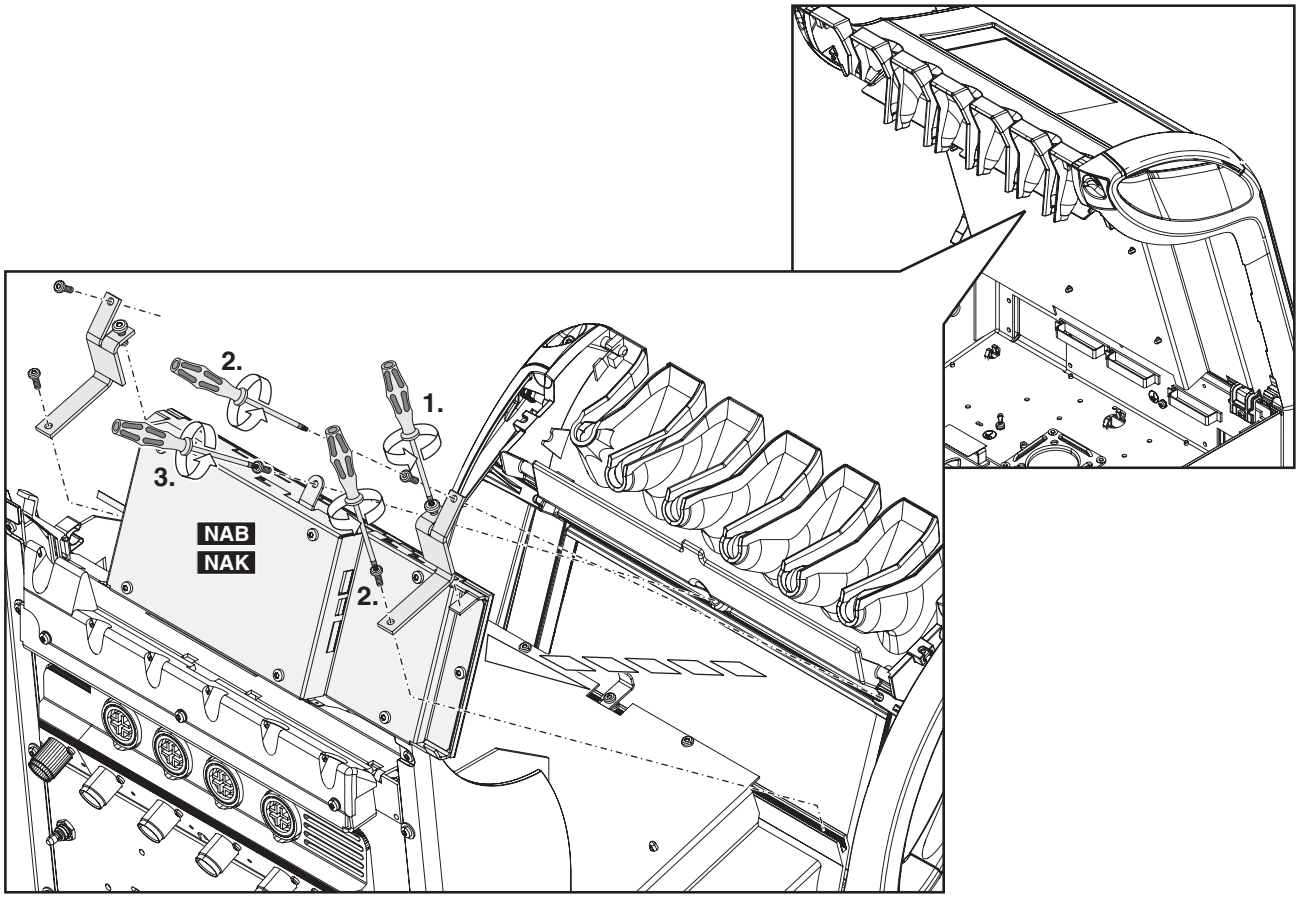

1. Loosen the setscrew.
2. Unscrew the upper screws of the retaining bracket.
   Loosen the lower screws of the retaining bracket.
   Turn the right retaining bracket outwards to the right and the left retaining bracket outwards to the left.
   Pull the connector X1 off of the user interface.
3. Unscrew the screw and remove the user interface panel.

NOTE

When re-assembling the unit:
Tighten the setscrews 1 and 3 (these are not fastening screws) only until the user interface panel is fixed in place.

1.12 Removing the NAK and NAB boards

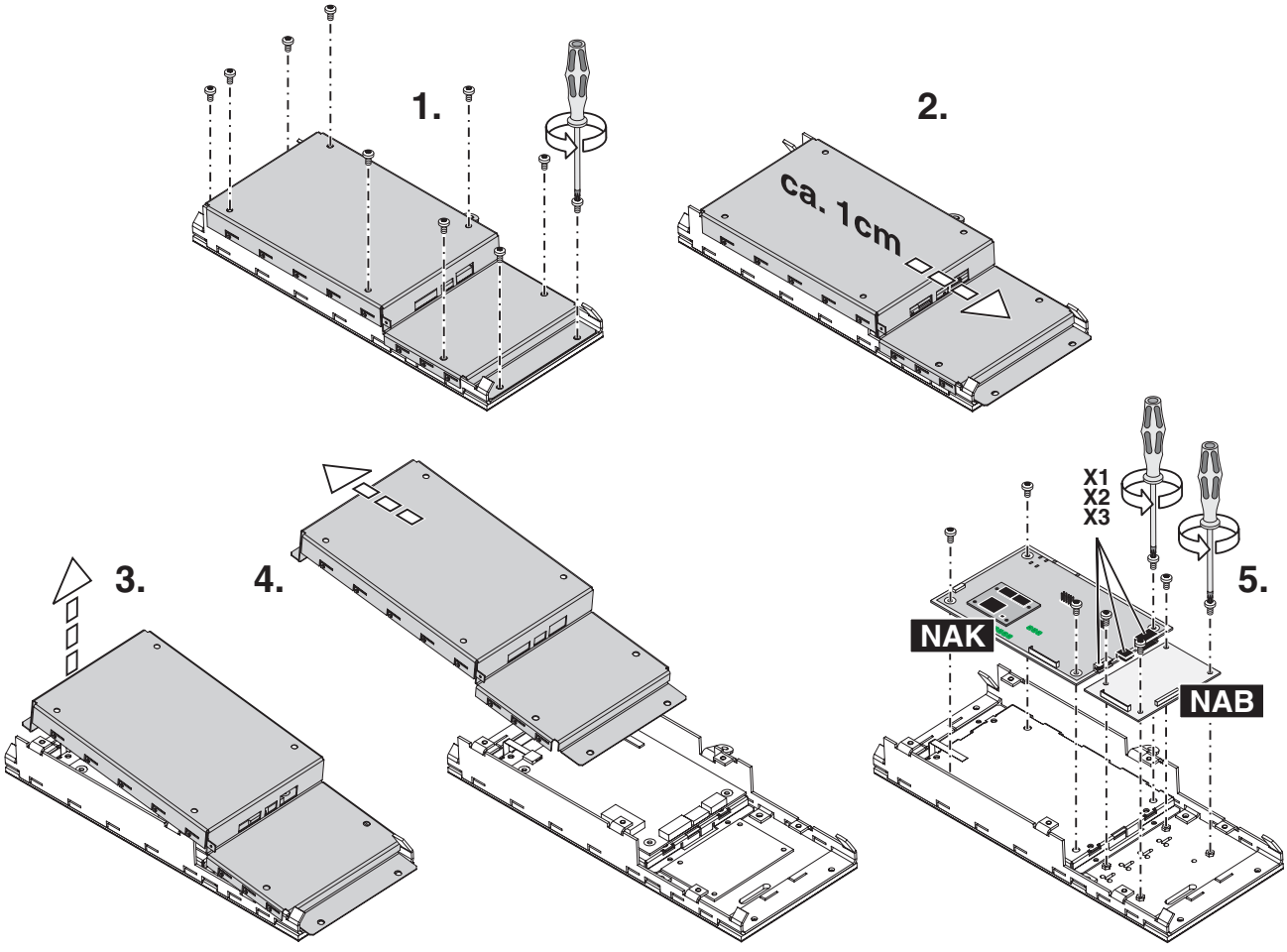

1. Unscrew the ten screws.
2. Push the cover approximately 1 cm to the right.
3. Lift the left side of the cover and
4. Remove the cover diagonally to the left.
5. Unscrew the boards.

CAUTION

*Pay attention to the connectors **X1**, **X2** und **X3** on the **NAK** board when putting the cover back on!*

1.13 Removing the NAR board for the X-ray viewer

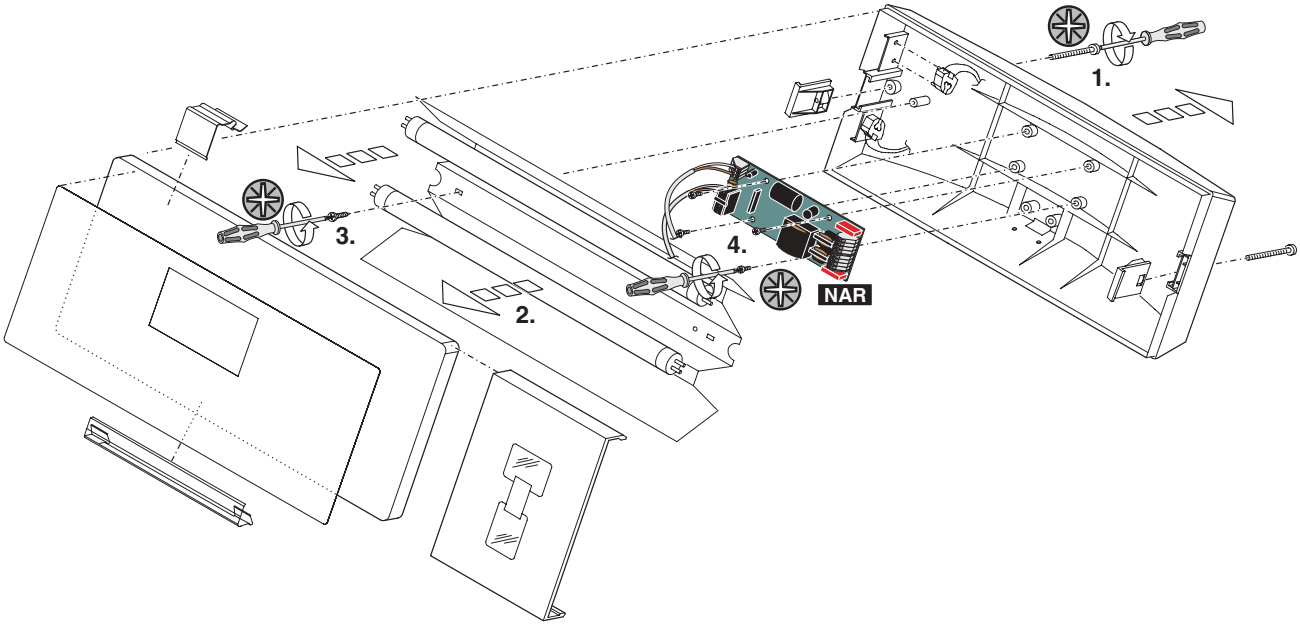

1. Unscrew two screws and pull off the back wall.
2. Remove the fluorescent lighting tubes.
3. Unscrew two screws and take off the reflector.
4. Unscrew four screws and remove the **NAR** board.

1.14 Removing the cover panels of the support arm of the assistant element.

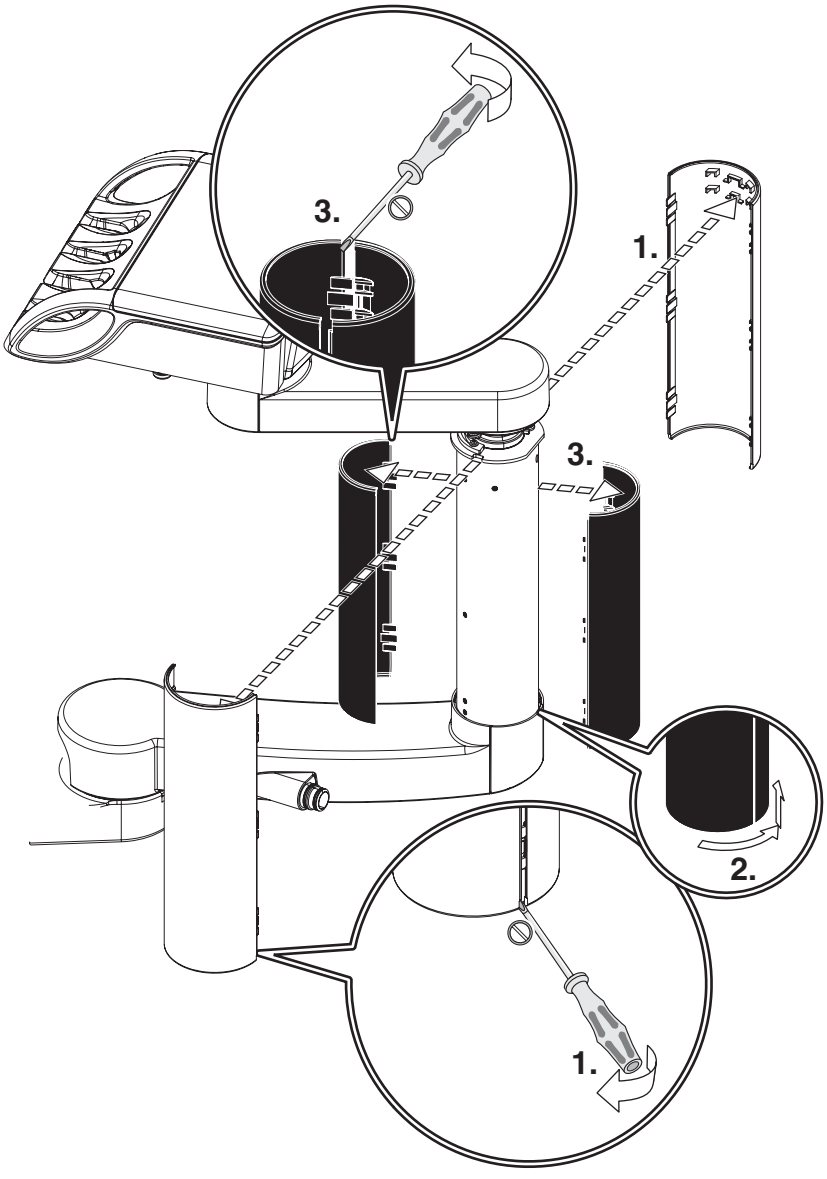

1. Remove the outer half-shell covers.
2. Detach the inner half-shell covers from the bayonet connector and move them upward.
3. Remove the inner half-shell covers.

1.15 Removing the cover panels of the assistant element

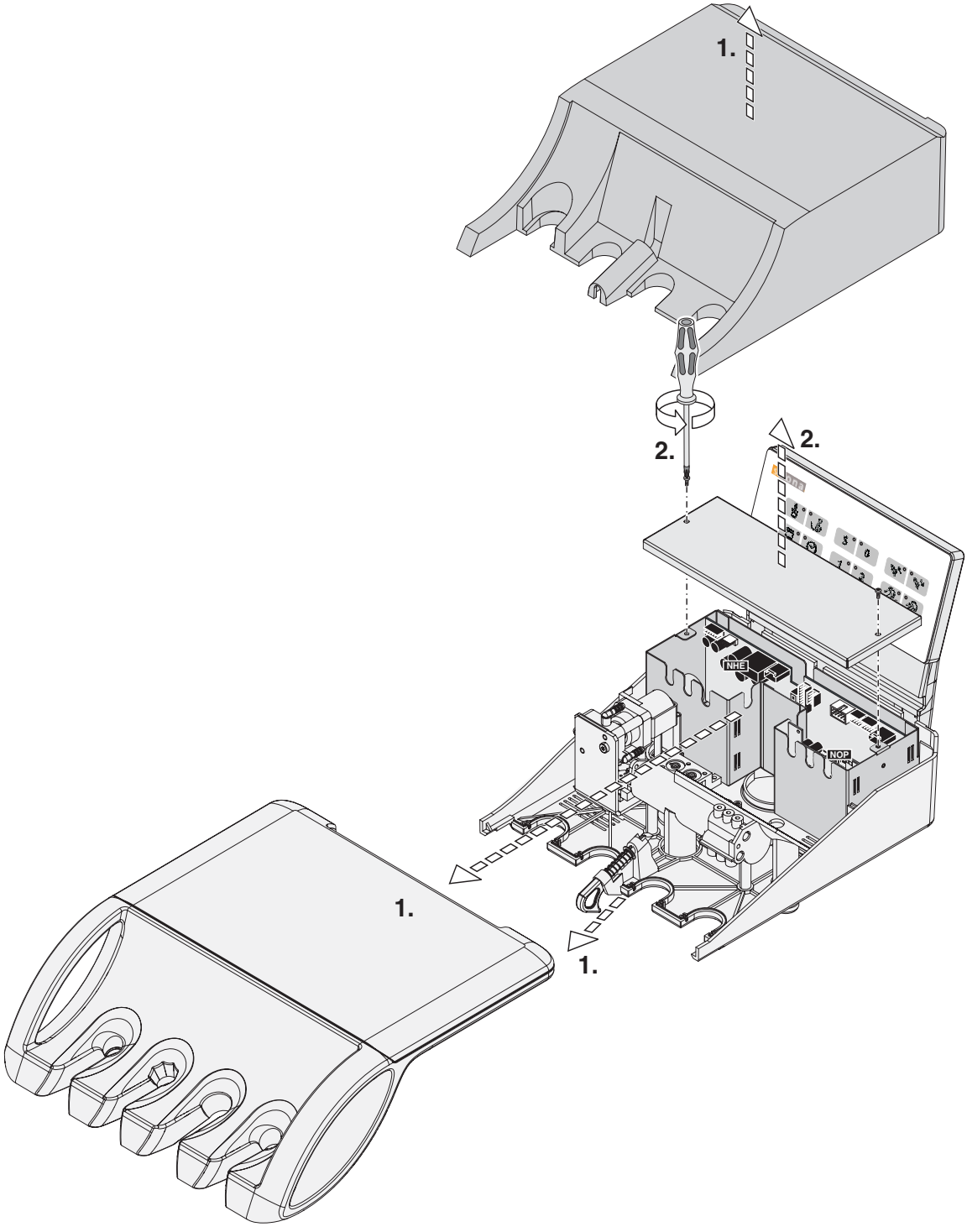

1. Pull the bar and remove the cover panels.
2. Unscrew two screws and remove the cover.

1.16 Removing the cover panels from the water unit

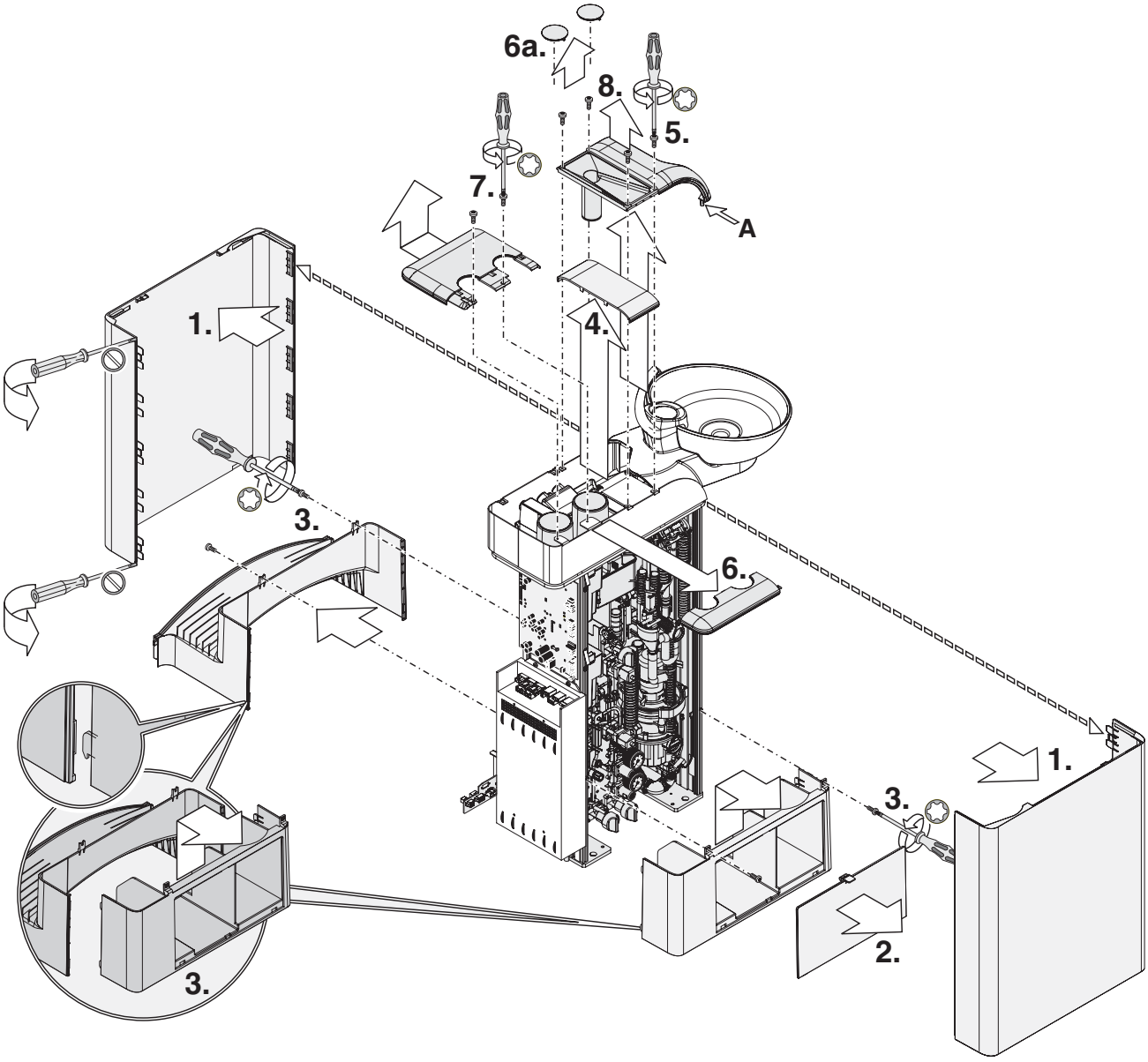

1. Carefully pry apart the side panels.
   Pull off the side panels.
2. Take off the service cover.
3. Unscrew the two screws on each of the covers, unhook and remove covers.
4. Take off the cover.
5. Unscrew the four screws on the cover.
6. Remove the cover, **6a.**. Remove the cover.
7. Unscrew the two screws on the cover and remove the cover.
8. Remove cover panel funnel.
   Pay attention to snap-in nose **A**.

sirona.
The Dental Company

2 Overview of modules and boards

TENEO

2.1 Locations of modules and boards

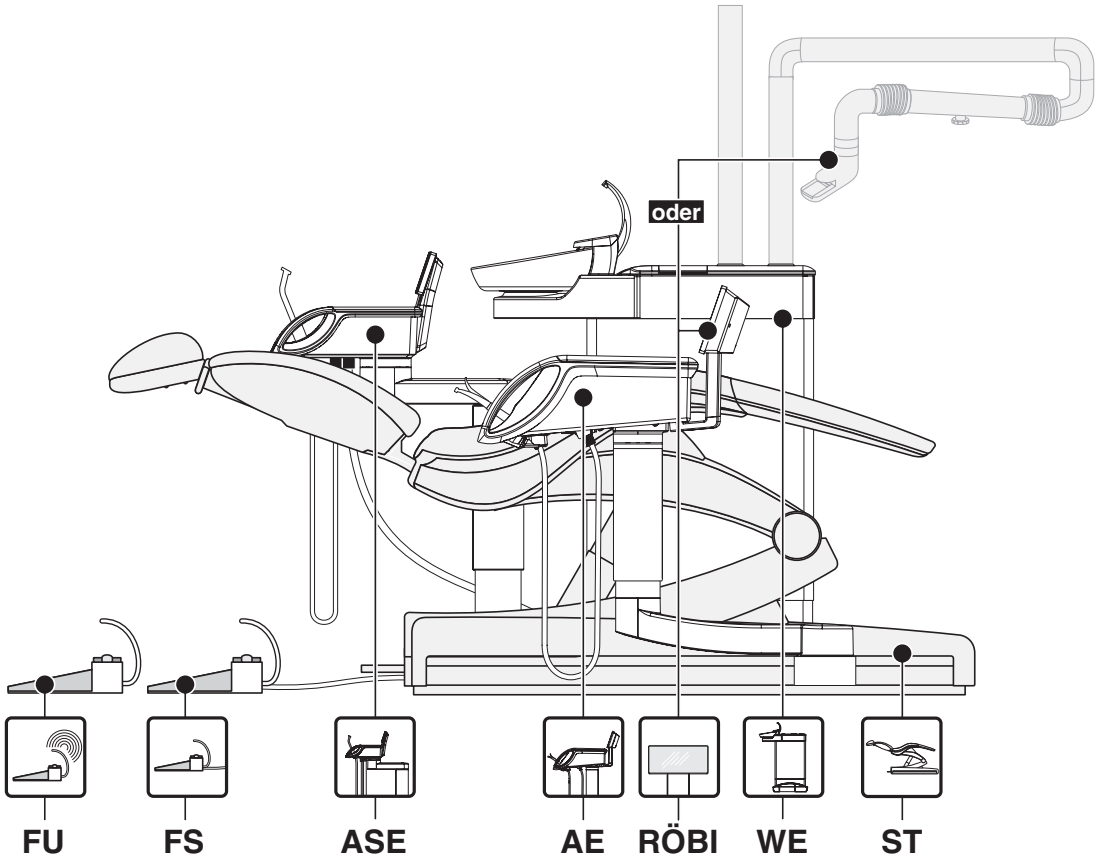

Component		Board/module	
ST	**Patient chair**	DCFU	Motor control (3 units)
		NSA	Connection box
		NSB	Base station wireless foot control
		NSC	Seat connect
		NSK	Headrest
		NSU	USB connection to chair
FS	**Foot control**		
FU	**Wireless foot control**	NSF	Wireless foot control
AE	**Dentist element**	CC	instrument holder recognition AE (6 x)
		HF^+	surgery module
		NAB	User interface AE LED board
		NAC	Motor control BL
		NAJ	AE control
		NAK	User interface AE baseboard
		NAL	Motor control SL
		NAU	USB connector to AE
RÖBI	**X-ray viewer** on the AE or tray support arm WE	NAR	X-ray viewer board
ASE	**Assistant element**	NHE	ASE control
		NHT	User interface ASE
		NOP	5 V power supply
WE	**Water unit**	NWE	WE control
		NWM	Automatic tumbler filling

2.2 ... In the patient chair

2.2.1 DCFU board - Motor control board

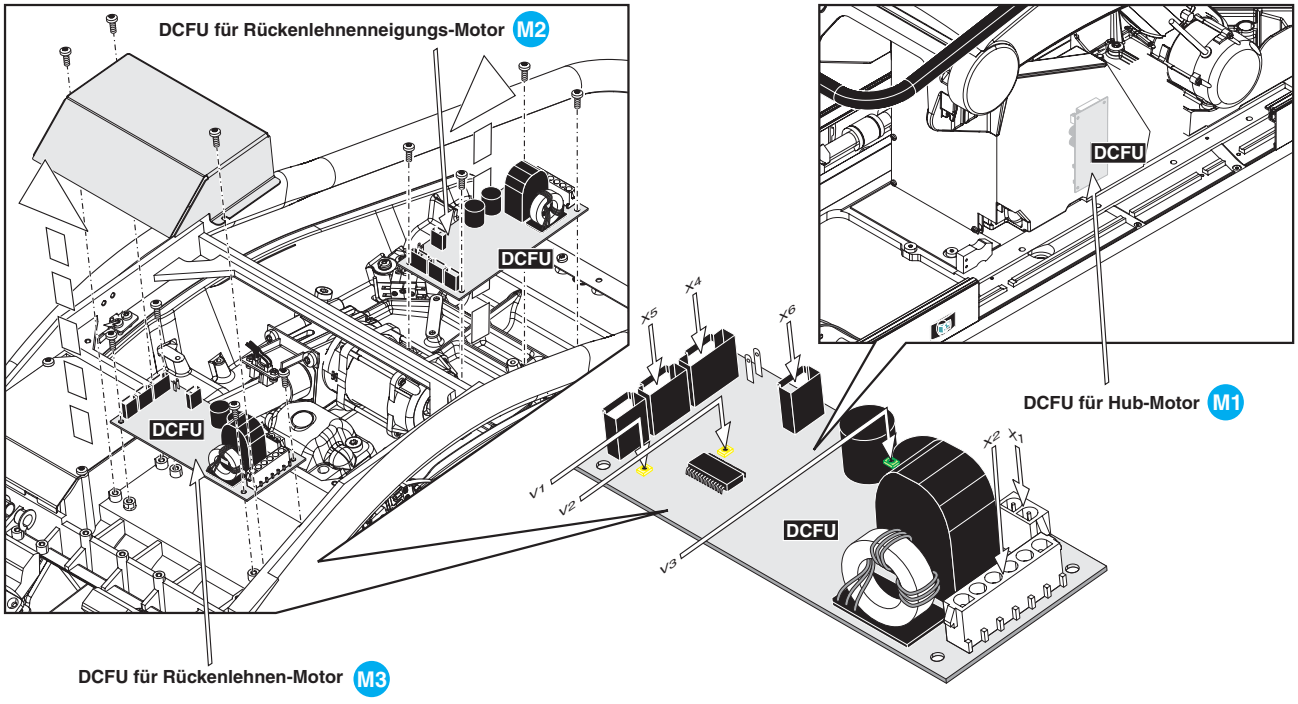

Board		Components on the board	
DCFU	Motor control Backrest motor **M3**	V2 status LED	(Yellow) Flashing 2 Hz > Motor running ON > Motor idling Flash code > Service message to NSA board
		V3 36 V LED	(Green)
		X1 > L326 > X9 NSA	Power supply
		X2 > M3	Motor connection
		X4 > L324 > X10 NSA	Control line
		X5 > L345 > Light barrier	for reference travel and adjustment
		X6 > Sensor	Angular momentum sensor of motor
Board		**Components on the board**	
DCFU	Motor control Backrest inclination motor **M2**	V2 status LED	(Yellow) Flashing 2 Hz > Motor running ON > Motor idling Flash code > Service message to NSA board
		V3 36 V LED	(Green)
		X1 > L326 > X9 NSA	Power supply
		X2 > M2	Motor connection
		X4 > L324 > X10 NSA	Control line
		X5 > L346 > Light barrier	for reference travel and adjustment
		X6 > Sensor	Angular momentum sensor of motor
Board		**Components on the board**	
DCFU	Motor control Lift motor **M1**	V2 status LED	(Yellow) Flashing 2 Hz > Motor running ON > Motor idling Flash code > Service message to NSA board
		V3 36 V LED	(Green)
		X1 > L325 > X7 NSA	Power supply
		X2 > M1	Motor connection

Board		Components on the board	
		X4 > L308 > X29 NSA	Control line
		X5 > L344 > Light barrier	for reference travel and adjustment
		X6 > Sensor	Angular momentum sensor of motor
		V2 status LED	(Yellow) Flashing 2 Hz > Motor running ON > Motor idling Flash code > Service message to NSA board

Function of the DCFU board

- Activated by the NSA board serially via CAN.
- Control of the three-phase drives in the patient chair.
- Acknowledgment of the motion via sensors in the motor.
- Position recognition via counting of the pulses by the software of the DCFU board.
- Communication of the motor position to the NSA board.

Motor locations

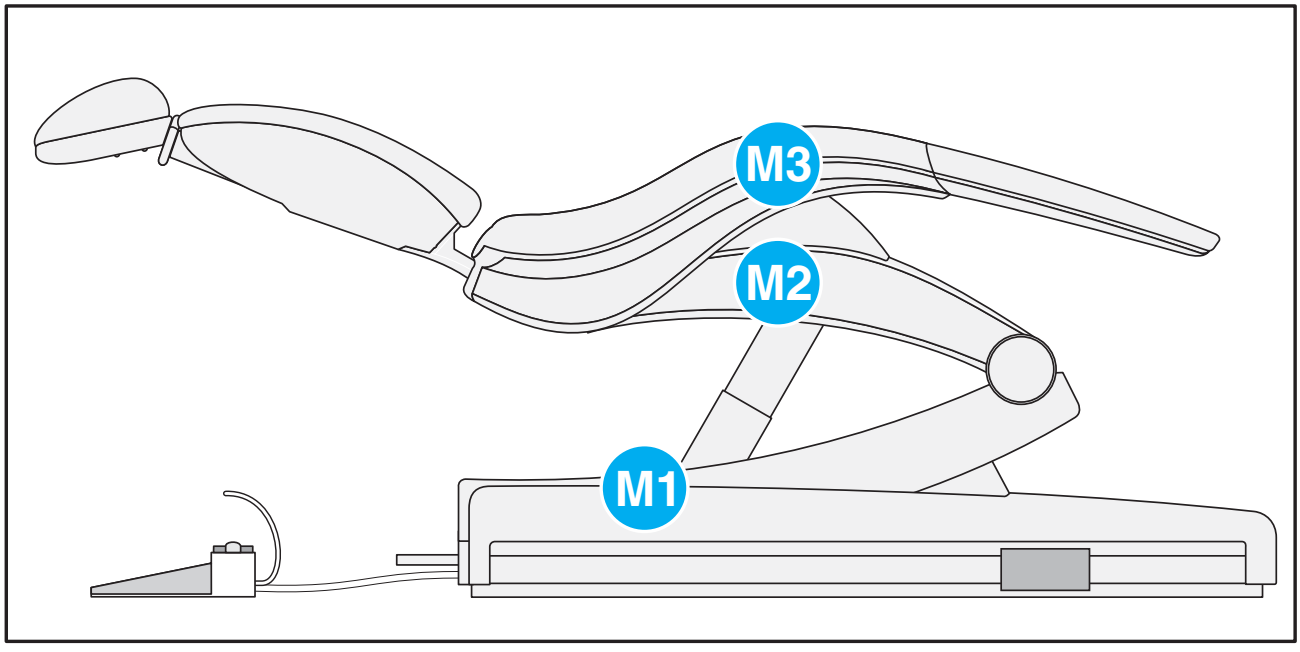

2.2.2 NSA board - Connection box

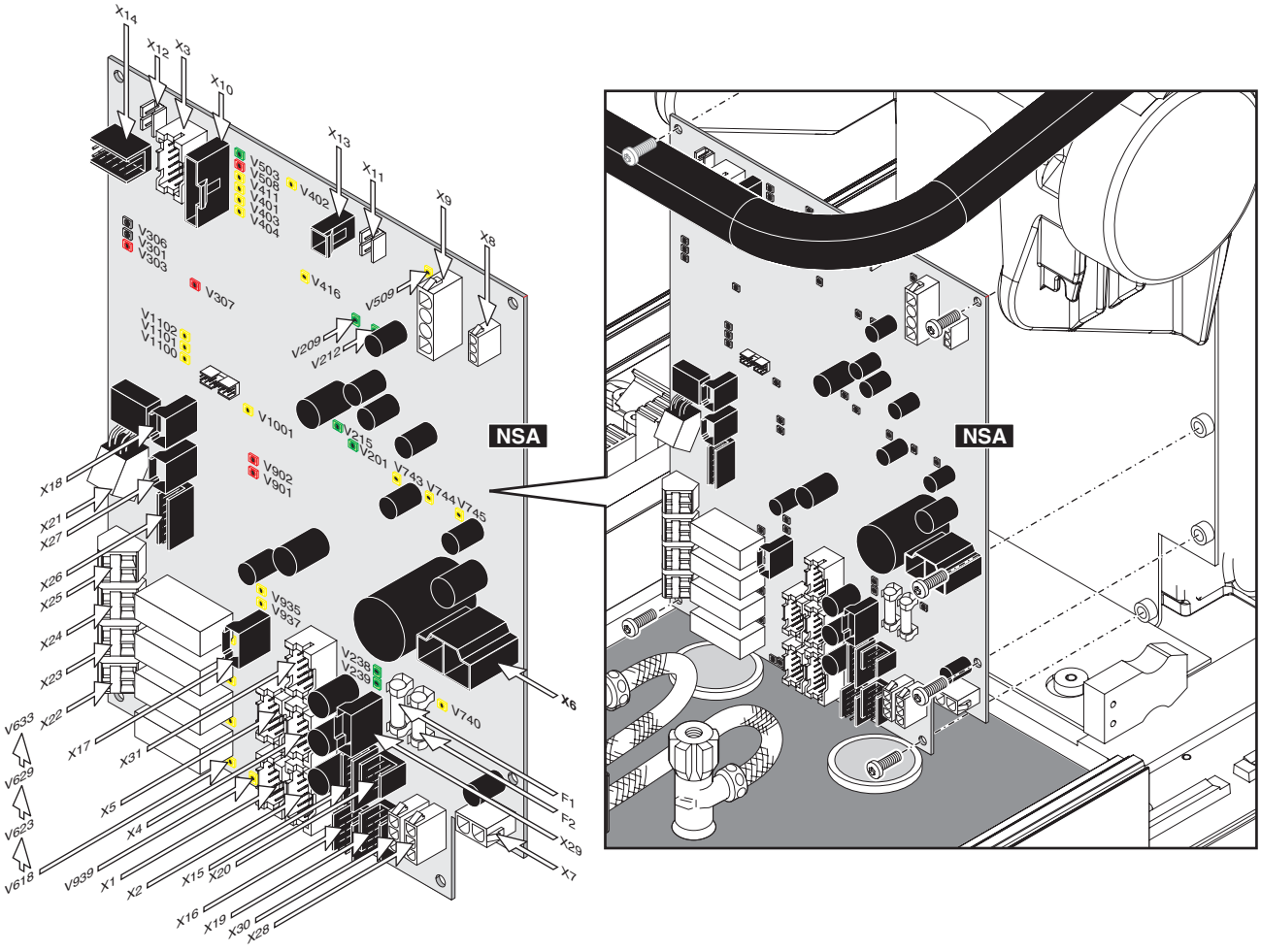

Board		Components on the board		
NSA	Patient chair control	F1	- T10AH 250V P	Dentist element
		F2	-T 10 AH 250 V P	Assistant element
		V201	- 36 V	(Green)
		V209	- 3.3 V	(Green)
		V212	- 5 V_Poti	(Green)
		V215	- 5 V	(Green)
		V238	- 36 V_AE	(Green)
		V239	- 36 V_HE	(Green)
		V503	- 3 V WDT	(Green)
		V303	- RESET	(red) Lights up briefly after the unit is switched on
		V508	- Safety Stop	(red) ON > Locking of the motors, MVs, relay > 1. Update software or 2. Replace board
		V901	- OC Track	(red) ON > Overcurrent shutdown travel track > Short circuit in motor 6 or in the line L309
		V902	- OC Clutch	(red) ON > Overcurrent shutdown travel track clutch > Short circuit in the clutch or in line L309
		V307	- ERROR	(red) Flash code >

Board	Components on the board		
	V402	- SS Code	(red) Flash code Active safety switch 2x > Chair lift and cuspidor bowl 3x > Lifting frame 4x > Assistant element 5x > Handrail 6x > Footrest 7x > Backrest 8x > Armrest 9x >Malfunction in communication to user interface 10x > Total tilt implausible 1. Carry out reference travel 2. Replace NSC 11x > Chair stop active = LED 411 12x > Total tilt invalid
	V411	- Chair stop active	(Yellow) ON > Motion lock by active instrument
	V416	- HR_Stop	(Yellow) ON > Motion lock by active instrument
	V623	- Bell relay	(Yellow)ON > Relay actuated
	V629	- Auxiliary relay	(Yellow)ON > Relay actuated
	V633	- Suction relay	(Yellow)ON > Relay actuated
	V740	- 36 V M1	(Yellow) ON > 36 V Motor 1 enabled
	V743	- 36V M2	(Yellow) ON > 36 V Motor 2 enabled
	V744	- 36V M3	(Yellow) ON > 36 V Motor 3 enabled
	V745	- 36 V NSC	(Yellow) ON >NSC board enabled
	V935	- Track	(Yellow) ON > Move travel track close
	V937	- Track	(Yellow) ON > Move travel track away
	V939	- Clutch	(Yellow) ON > Travel track clutch activated
	V1001	- FS active	(Yellow) ON > Foot control pedal activated
	V1100	- LAN Speed LED	(Yellow) ON > 100 Mbit OFF > 10 Mbit
	V1101	- LAN Link/Activity	(Yellow) ON > When connected Flashes > During LAN data transmission
	V1102	- LAN Full Duplex	(Yellow) ON > If full duplex OFF> If half duplex
	X1	> L307 > SDI2 X1.1 - X1.10 > L248 > X22 NAJ	
	X2	> L305 > X6 > L205 > X5 NWE	
	X3	> L306 > X3 NSC	
	X4	> L340 > SDI2 X2.1 - X2.10 > L231 > X4 NHE	
	X5	> L311 > X5 NSB	
	X6	> L302 > X3 > L202 > X2 power supply	
	X7	> L325 > X1 DCFU M1 power supply	
	X8	> L303 > X1 NSC power supply	
	X9	> L326 > X1 DCFU M2 and DCU M3 power supply	
	X10 > L324 > X4 DCFU M2 and DCU M3 control line		
	X11 > L316 > S12 SS-SH		
	X12 > L317 > S1 - S4 SS-HR		
	X13 > L333 > SDI2 X2.12 - X2.13 > L235 > S14 SS_HE > L232 > X1 NHE		
	X14 > L331 > S5 - S8 SS_HL > L334 > S9 SS_FA > L332 > S10 SS_RL > L335 > X13 > L342 > S11 SS_AL		
	X15 > L312 > 4-way foot switch		
	X17 > L309 > M6 4-way foot switch		
	X18 > L310 > X7 Poti 4 way foot switch		

Board		Components on the board
		X19 > L313 > X8 / X9 > L314 C2+ foot control
		X20 > L313 > X8 / X9 > L314 C2+ foot control
		X21 > RJ45 > L339 > RJ45 External PC Sivision
		X26 > L328 > MVP1 - MVP3
		X27 > MVAB
		X28 > L341 > SDI2 X2.14 - X2.15
		X29 > L308 > X4 DCFU M1 Control line
		X30 > L315 > SDI2 X1.14 / X1.15 > L249 > X22 NAJ

Function of the NSA board

- Travel track activation
- Activation of the main input valves for air/water
- Activation of the valve block for the media in the dentist element (SV and PV)
- Enabling of wireless foot control (optional)
- Evaluation of four-way foot switch
- Evaluation C+of foot control
- System clock (RTC)
- Evaluation of the position sensor on the NSC board
- Communication with the user interface via S-CAN
- Communication with the DCFU boards
- Power supply for the DCFU boards
- Communication with the NSC board
- Communication via Ethernet with the PC
- Power supply for the electronic circuit of the assistant element
- Power supply for the electronic circuit of the dentist element
- Evaluation of all safety switches
- Software update via LAN / Implementation of the Ethernet protocol on S-CAN

NOTE

If the safety switch S12 is active (V402/SS code/Flashes 2x), the chair can only move upwards when the cuspidor bowl is swiveled inwards.

- Communication via CAN with the NSK board
- Power supply of the NSK board

2.2.3 NSB board - Wireless base station

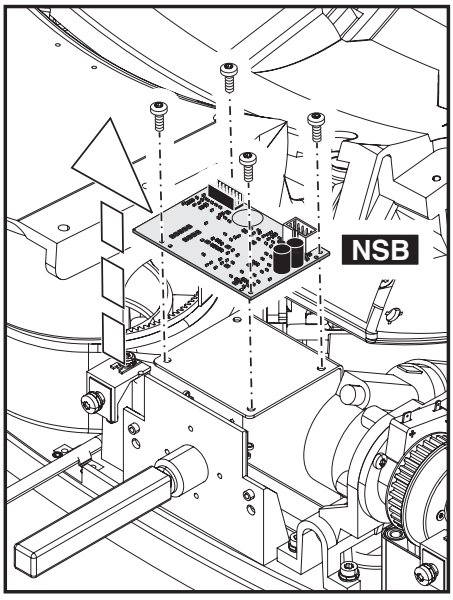

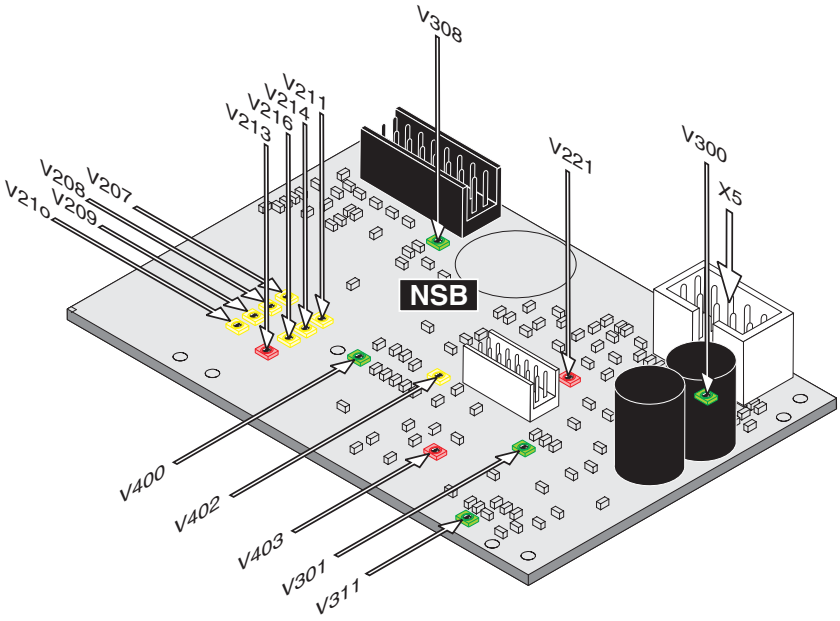

Board		Components on the board	
NSB	Wireless foot control base station	V207 - SP	(Yellow) Pedal
		V208 - CL	(Yellow) Cursor right
		V209 - CR	(Yellow) Cursor left
		V210 - CB	(Yellow) Cursor down
		V211 - CF	(Yellow) Cursor up
		V213 - Bat	(Red) ON > Replace battery in wireless foot control
		V214 - SL	(Yellow) S / Spray
		V216 - SR	(Yellow) O / Chip blower
		V221 - WDT	(Red) ON > Cable foot control connected or no CAN communication or NSB board defective Flashing > Overcurrent protection on foot control line active
		V300 - 36 V	(Green)
		V301 - 3.3 V	(Green)
		V308 - 2.5 V	(Green)
		V311 - 5 V	(Green)
		V400 - RUN	(Green) Must flash with 1 - 2 Hz in normal status
		V402 - BOOT	(Yellow) Lights up briefly when booting > Flashing 1 Hz = Login procedure active
		V403 - RESET	(Red) Lights up briefly after the BHE is switched on
		X5 > L311 > X5 NSA	

Function of the NSB board

- Wireless base station for devices connected by wireless (e.g. wireless foot control).
- Communication with the other boards via CAN.
- Transmission frequency 2.4 GHz

2.2.4 NSC board - Seat connect

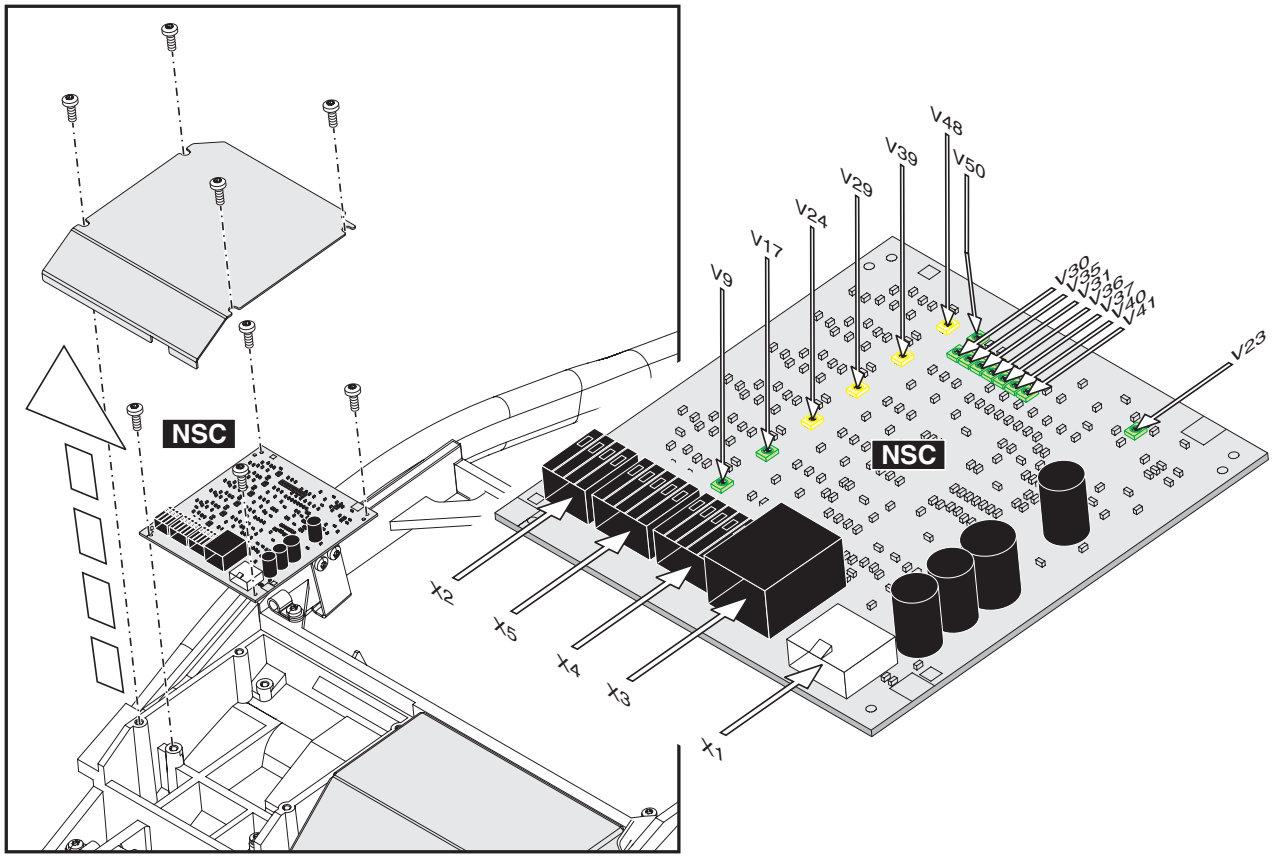

Board		Components on the board			
NSC	Seat connect	V23 - 3.3 V	(Green)		
		V24 - MVKP4	(Yellow)Deflate upper cushion	Massage	
		V29 - MVKP3	(Yellow)Inflate upper cushion	Massage	
		V39 - MVKP2	(Yellow)Deflate lower cushion	Massage	lumbar support
		V48 - MVKP1	(Yellow)Inflate lower cushion	Massage	lumbar support
		X1 > L303 > X8 NSA			
		X2 > L338 > X14 > Solenoid valves MVKP1 / MVKP2 X2 > L338 > X15 > Solenoid valves MVKP3 / MVKP4			
		X3 > L306 > X3 NSA			
		X4 > L322 > X10 > L323 > X4 NSK			

Function of the NSC board

- Activation with serial interface of NSA board with IIC bus.
- Evaluation of the position sensor for the seating angle.
- Forwarding of the CAN connection to the NSK board.
- Activation of the solenoid valves for massage support.
- For the active lumbar support support, only the lower cushion is inflated.
- For massage, the lower and upper cushions are alternately inflated.

Solenoid valve for massage/active lumbar support

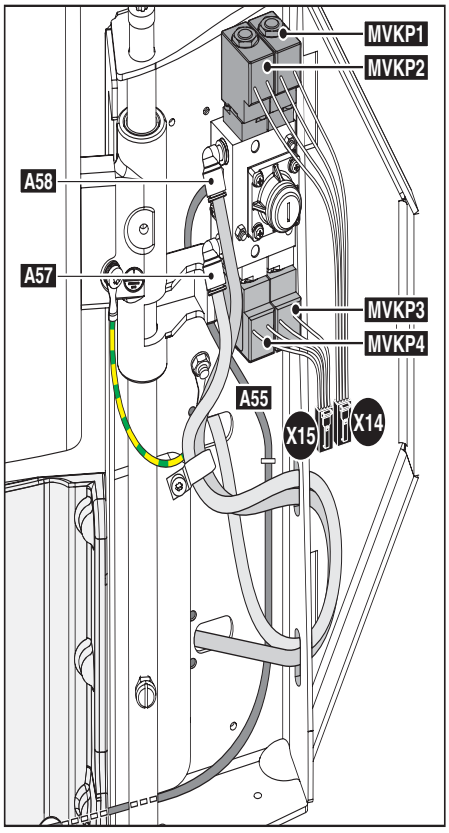

		Components
		MVKP1 - Lumbar support inflation
		MVKP2 - Lumbar support deflation
		MVKP3 - Massage inflation
		MVKP4 - Massage deflation
		MVKP3 / MVKP4 > X14 > L338 > X2 NSC
		MVKP1 / MVKP2 > X154 > L338 > X2 NSC

2.2.5 NSK board headrest

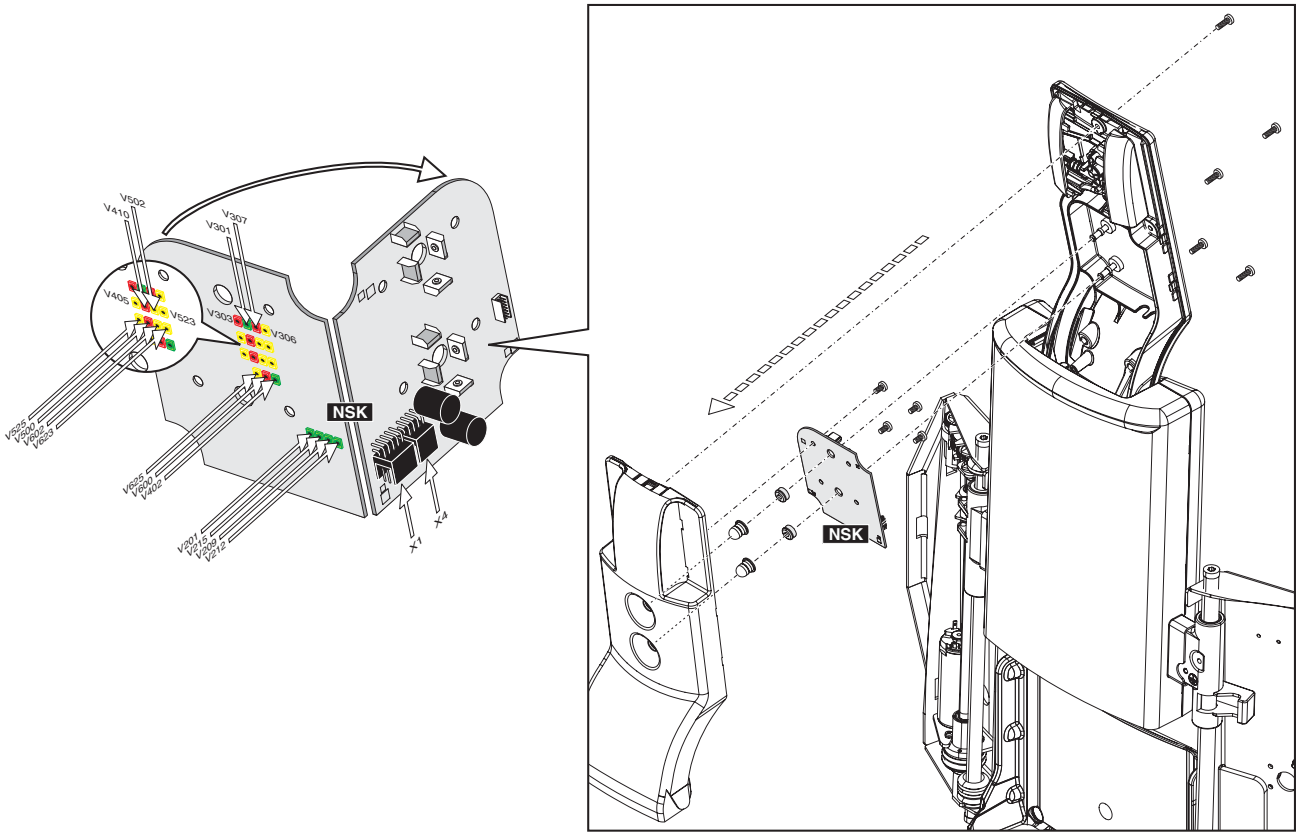

Board		Components on the board	
NSK	Headrest	V201 - 36 V (	Green)
		V209 - 3.3 V (	Green)
		V212 - 3.3V Poti	(Green)
		V215 - 5 V (	Green)
		V301 - RUN	(Green) Flashes in normal operation
		V303 - RESET	(Red) Lights up briefly after treatment center is switched on.
		V306 - BOOT	(Yellow)
		V307 - ERROR	(Red)
		V402 - 3V_WDT	(Green) ON > OK OFF > and V201 ON > Replace NSK board OFF > and V201 OFF > Check line 36 V
		V405 - Headrest stop M5	(Yellow)Directly connected with HR_Stop (V416) from NSA board ON > Motion locking via active instrument
		V410 - Safety Stop	(Red) OFF > OK ON > Check V405 ON > Motor control blocked by NSA board OFF > Check RUN-LED OFF > Update software Flashing > Replace N>SK board
		V500 - OC_Headrest tilt M5	(Red) ON > Short circuit in tilting section of motor/line
		V502 - Headrest tilt block M5	(Yellow)ON > Motor brake for tilt section active
		V523 - Headrest tilt M5	(Yellow)Headrest backward
		V525 - Headrest tilt M5	(Yellow)Headrest forward
		V600 - OC_Headrest M4	(Red) ON > Short circuit in motor/line for size adjustment
		V602 - OC_Headrest block M4	(Yellow)ON > Motor brake size adjustment active

Board		Components on the board	
		V623 - OC_Headrest M4	(Yellow)Extend motor for size adjustment
		V625 - OC_Headrest M4	(Yellow)Retract motor for size adjustment
		X1 > L327 > M5 tilt component	
		X1 > L337 > Poti tilt component	
		X1 > L321 > M4 size adjustment > Poti size adjustment	

Function of the NSK board

- Activation and evaluation of size adjustment
- Activation and evaluation of overstretch.
- Communication with the other boards via CAN.
- Evaluation of the four-way switch in the headrest.

2.2.6 NSU board - USB connection to patient chair

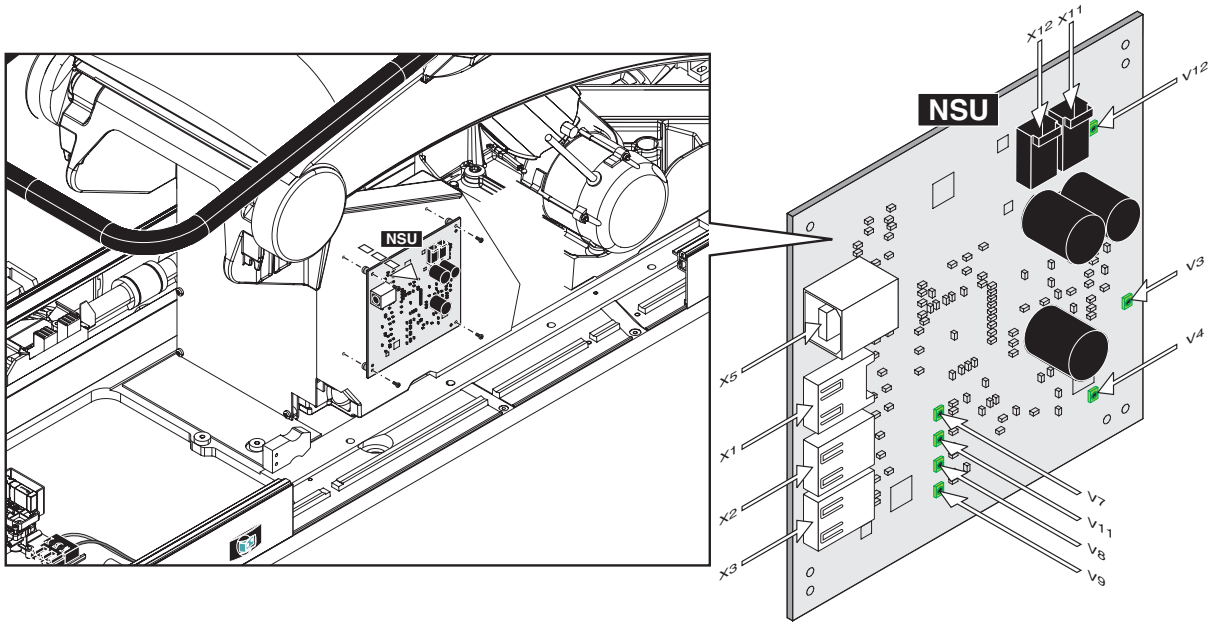

Board		Components on the board	
NSU	USB connection to patient chair	V3 - 5V	(Green)
		V4 - 3V3	(Green)
		V7 - X5	(Green) USB connection to external PC
		V8 - X2	(Green) ON > If USB device on X2
		V9 - X3	(Green) ON > If USB device on X3
		V11 - X1	(Green) ON > If USB device on X1
		V12 - 12V5	(Green)
		X1 > L330 > X1 SDI	
		X5 > L348 > USB repeater > L343 > External PC	
		X11 > L320 > X4 > L203 > X6 Power supply	

Function of the NSU board

- In the patient chair it forms the interface between the PC connection and the USB applications in the dentist element.
- The integrated power supply unit supplies a current of 2000 mA for the power supply of the USB connections.
- The NSU board provides 12.5 V for the NAU board in the dentist element.

2.3 ... in the foot control

2.3.1 Wireless foot control

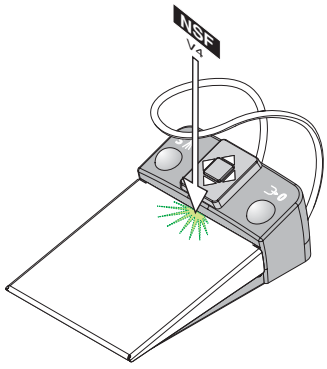

Board		Components on the board
NSF	Wireless foot control	V4 - As long as the login procedure is running, the reflection of the green flashing LED is visble on the step. The flashing stops when the login has been successfully completed or after 30 seconds without a login. Battery status indicator during battery insertion: 10 sec ON > Battery usable 10 sec FLASHING > Replace battery OFF > Battery empty or NSF board defective

2.4 ... in the dentist element

2.4.1 CC board - instrument holder recognition in the dentist unit

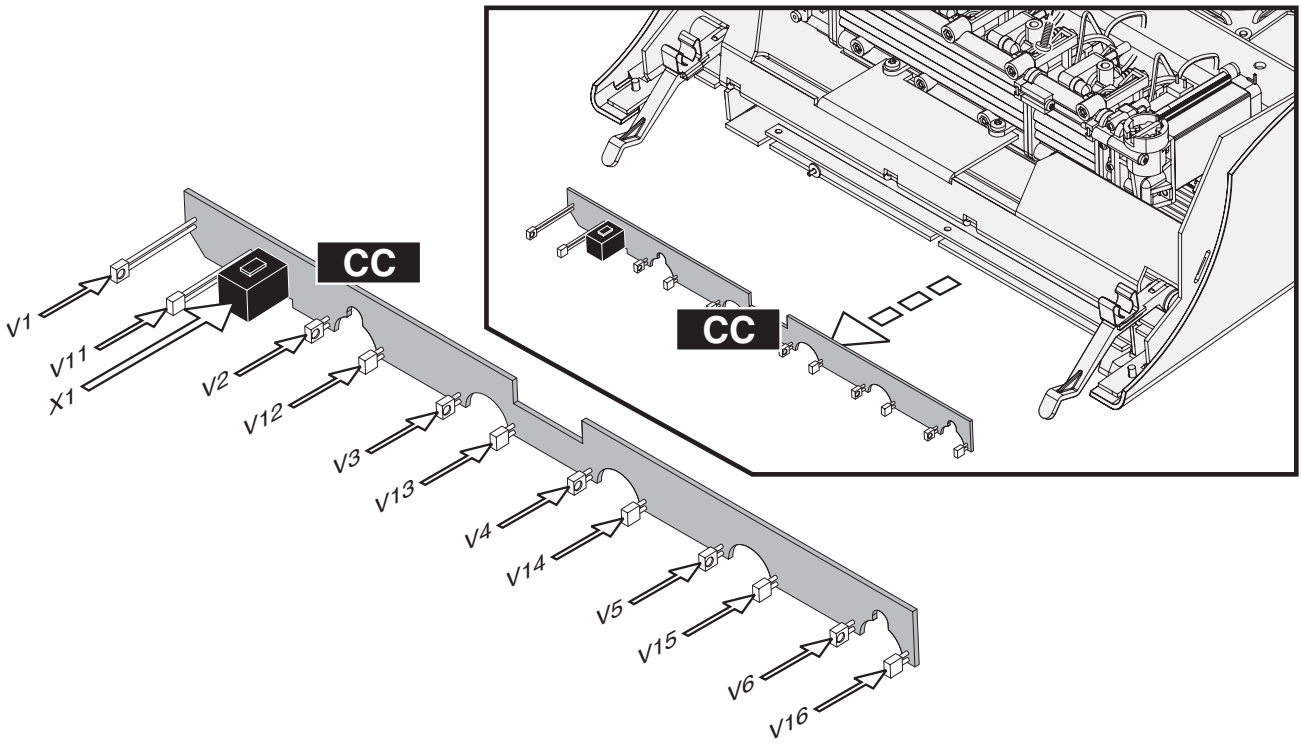

Board		Components on the board	
CC	Instrument deposit acknowledgment	V1 / V11	Sensor holder 1
		V2 / V12	Sensor holder 2
		V3 / V13	Sensor holder 3
		V4 / V14	Sensor holder 4
		V5 / V15	Sensor holder 5
		V6 / V16	Sensor holder 6
		X1> L260 > X12 NAJ	

Function of the CC board

- Acknowledgment of instrument removal in the holder of the dentist element via infrared transmitter/receiver.
- Not compatible with the C line.

2.4.2 HF+board - Surgery module

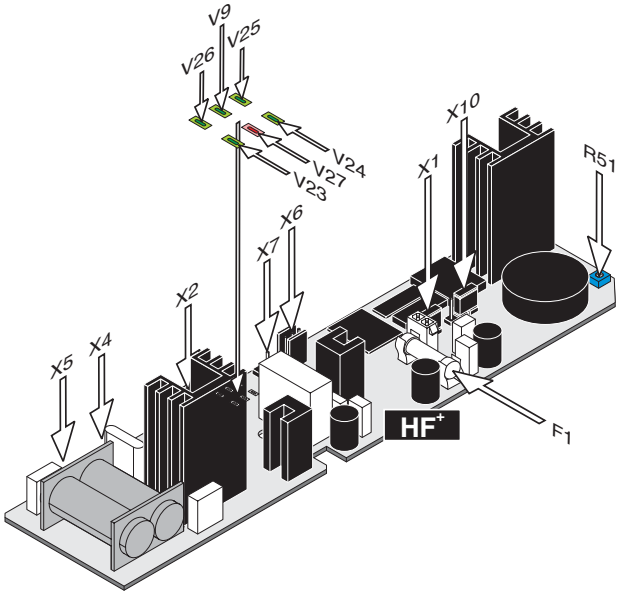

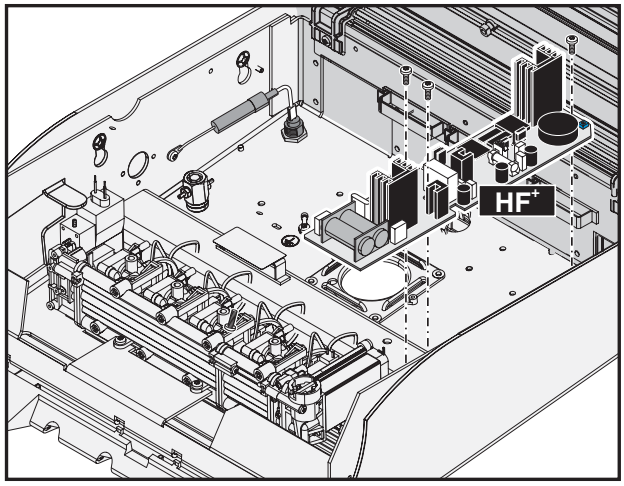

Board		Components on the board		
HF+	Surgery module	F1	- 4AM 36 V DC	
		R51 - Buzzer volume		
		V9	- Voltage in end phase	(Green)
		V23 - +5 V		(Green)
		V24 - Function check		(Green)
		V25 - HF active		(Green)
		V26 - CAN check		(Green)
		V27 - RESET		(Red) Lights up briefly after treatment is switched on.
		X1	> L252 > X32 NAJ	36 V DC power supply
		X2	> L252 > X32 NAJ	CAN / foot control
		X4	> Flange_HF	
		X5	> Connection to ground wire	
		X6	> Flange_HF hose code	
		X7	> Code Pin 2 / Pin 3 must be connected	
		X10 > Jumper C1 / C2 must be connected at C1		

Function of the HF+ board

- Generates the high frequency of the Sirotom handpiece.
  The one pin of the high voltage is the tip of the handpiece, the other is the ground / casing.
  Control via CAN.
  Overheating guard at the end phase.
  Generation of the operating tone with active HF.
- The HF module is switched on for a few seconds after the dental treatment center is switched on. During this period the HW/SW status is queried and the module carries out a self-test. Subsequently the module is switched off again. When the HF handpiece is removed, the module is switched on again and carries out a brief self-test. When the handpiece is returned to its place, the module is switched off again.
- For operation in this dental treatment center, the code bridge X10 must be set to position "C1" and the code bridge at X7 must be connected to Pin 2 / Pin 3.
- When HF is activated, the video circuit is shut off in the power pack and switched on again when the handpiece is replaced. This is necessary so that no interference is visible on the screen when HF is active. When the video circuit is switched off, the USB power supply and thus the USB camera are switched off.

2.4.3 NAC board - BL motor control

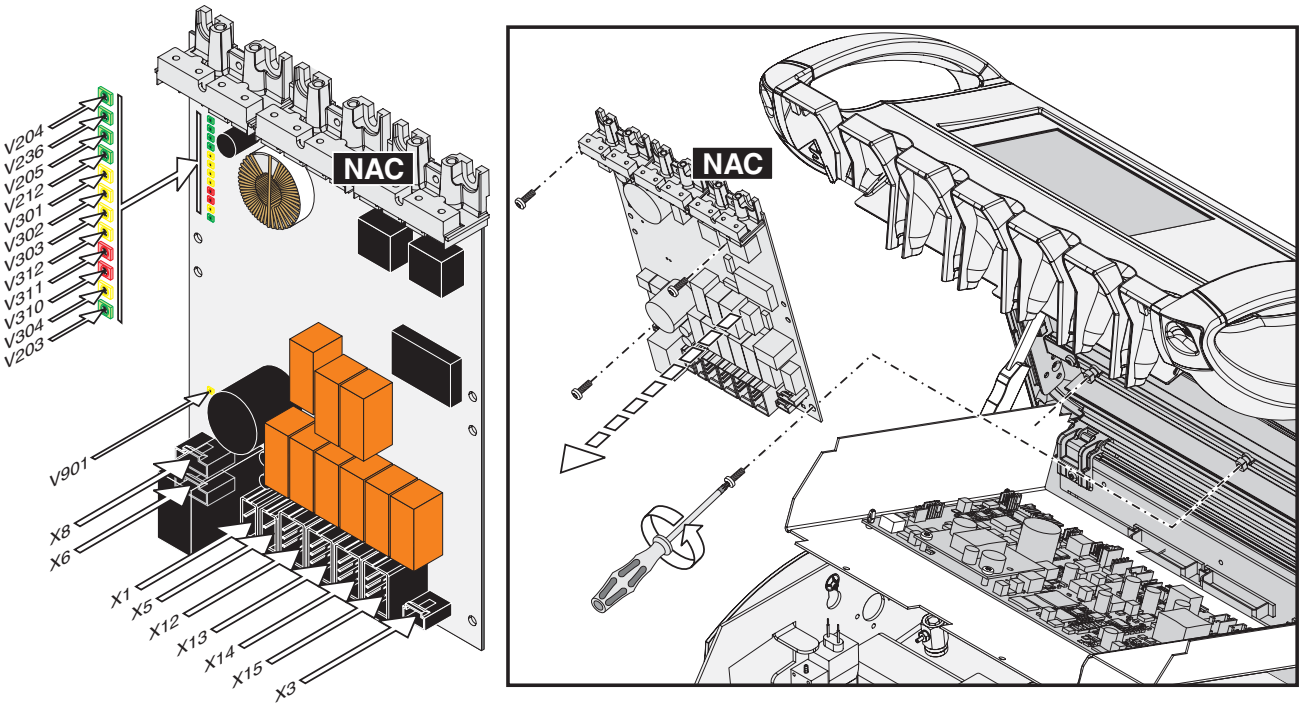

Board		Components on the board		
NAC	BL motor control	V203 -	3V3	(Green)
		V204 -	3V3	(Green) analog
		V205 -	5 V	(Green)
		V212 -	12 V	(Green)
		V236 -	+36 V	(Green)
		V301 -	RUN	(Yellow) Flashes during standby 1 Hz Flashes when instrument is active 10 Hz
		V302 -	TEST 1	(Yellow) Lights up when foot control is activated
		V303 -	TEST 2	(Yellow) Lights up when motor controller J416 is in error status
		V304 -	BOOT	(Yellow)
		V310 -	RESET	(Red) Lights up briefly after unit is switched on
		V311 -	ERROR	(Red)
		V312 -	CLAW	(Yellow) Indicates the active instrument holder via flash code
		V901 -	5V	(Yellow) from NAJ
		X1	> L248 > X1.16 / X1.17 AK	
		X3	> L251 > Flange_Scaler	
		X5	> Option_PK_Supply	
		X6	> Option_PK_Communication	
		X8	> L244 > X8 NAJ	
		X12	> L258 > Holder 2	
		X13	> L258 > Holder 3	
		X14	> L258 > Holder 4	
		X15	> L258 > Holder 5	

Function of the NAC board

- This board is integrated in the workstation via CAN and takes over the control of the brushless dental motors and turbines.
- Supply for instrument light (halogen or LED).

2.4.4 NAJ board - Dentist element control

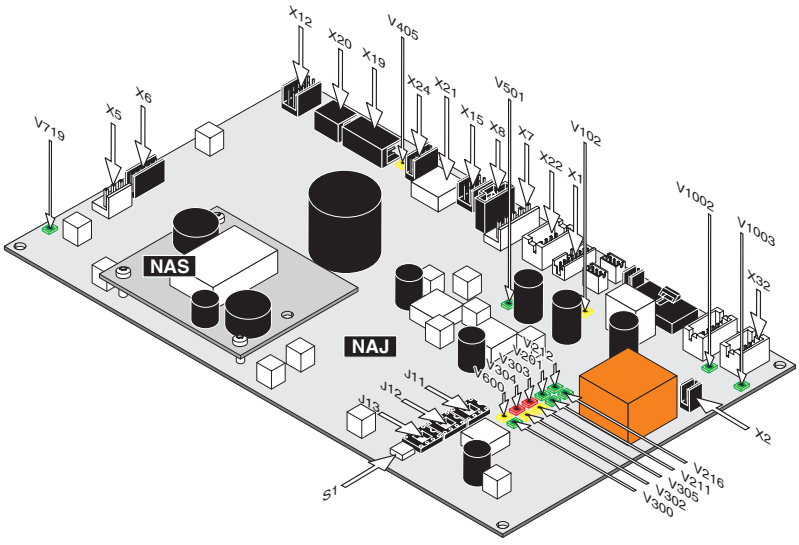

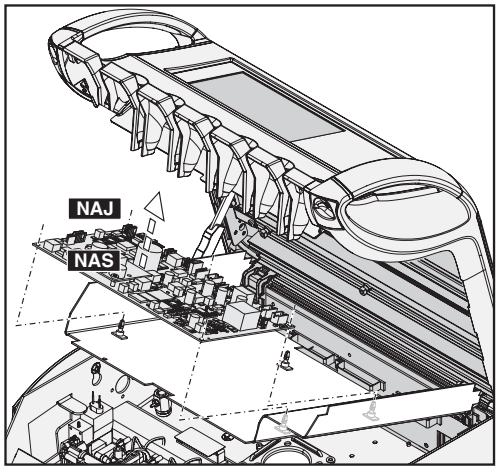

Board		Components on the board	
NAJ	Dentist element control	J11 > SW Option 1)	
		J12 > SW Option 2)	
		J13 > SW Option 3)	
		S1 > S1.1 ON > Ultrasound on instrument holder pos. 6 OFF > Ultrasound on holder pos. 5 S1.2 ON > Camera on external holder pos. 7 OFF > Camera on holder pos. 6	
		V102 - Chair Stop	(Yellow)
		V201 - 36 V	(Green)
		V211 - 26V5	(Green)
		V212 - 5 V	(Green)
		V216 - 3V3	(Green)
		V300 - HB	(Green) Flashes during normal operation
		V302 - BL	(Yellow) Lights up briefly while booting Permanently ON > Connection to NSA board not present or NAJ board is defective
		V303 - ERROR	(Red) Flash code
		V304 - RESET	(Red) Lights up briefly after unit is switched on
		V305 - User	(Yellow) Lights up when at least one instrument has been removed
		V405 - NaCl	(Yellow) ON > NaCl pump switched on
		V501 - 36V	(Green) ON > Heater switched on
		V600 - FPGA	(Yellow) Flashing > OK (configuration is loaded) Lit up> US scaler active
		V719 - P5V	(Green) ON > Sprayvit removed Sprayvit supply on
		V1002 - 36V_AUX	(Green)
		V1003 - 36V_HF	(Green)
		X1 > L246 > X1 NAP	
		X2 > L250 > Flange_Scaler	
		X5 > L256 > Holder 1 Sprayvit with light, air and water heater	
		X6 > L256 > Holder 1 Sprayvit with light, key and hose coding	
		X7 > L245 > Spray water heater	
		X8 > L244 > X8 NAL	
		X12 > L260 > X1 CC	

Board		Components on the board
		X15 > L247 > X-ray viewer
		X19 > MV_21_1 - MV_21_4 / MV_22_ZEG_Water / MV_23_ZEG_Air / MV_24_Sprayvit_Water / MV_25_Sprayvit_Air
		X21 > L248 > X1.14 / X1.15 AK
		X21 > L248 > X1.14 / X1.15 AK
		X21 > L248 > X1.14 / X1.15 AK
		X21 > L248 > X1.14 / X1.15 AK
		X22 > L249 > X1.1 - X1.10 AK
		X24 > NaCl
		X32 > L252 > X1.1 , X1.2 HF+ X2.1B, X2.2B HF+ X2.3B, X2.4B HF+

Function of the NAJ board

- The NAJ board controls the dentist element functions.
  The board is part of the basic equipment of the dentist element in the dental treatment center.
- The following functions have been implemented:
  - Control of the Sprayvit and ultrasound instruments and intraoral video camera
  - Instrument removal acknowledgment
  - Control of solenoid valve, med. solution, standard (water) heater, light barrier 5/6 on the instrument holder, NaCl pump
  - Control and power supply for optional board for X-ray viewer
  - Communication with the NAL instrument controls (for SL) and NAC (for BL motors)
  - Interface to user interface
  - Interfaces for 3 HW dongles (J11 / J12 / J13)
  - Control and interface for optional HF and apex

S1 switch settings:

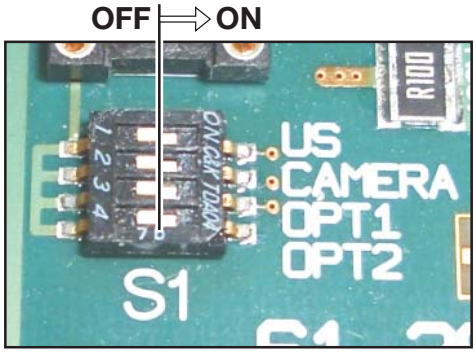

S1.1 - Ultrasound	S1.2 - CAMERA	Function
ON	ON	Ultrasound on instrument holder pos. 6 / Camera on external holder pos. 7
ON	OFF	Not permissible (ultrasound does not work)
OFF	ON	Ultrasound on instrument holder pos. 5 / Camera on external instrument holder pos. 7
OFF	OFF	Ultrasound on instrument holder pos. 5 / Camera on instrument holder pos. 6

2.4.5 NAK board - User interface to dentist element baseboard and NAB board LED board

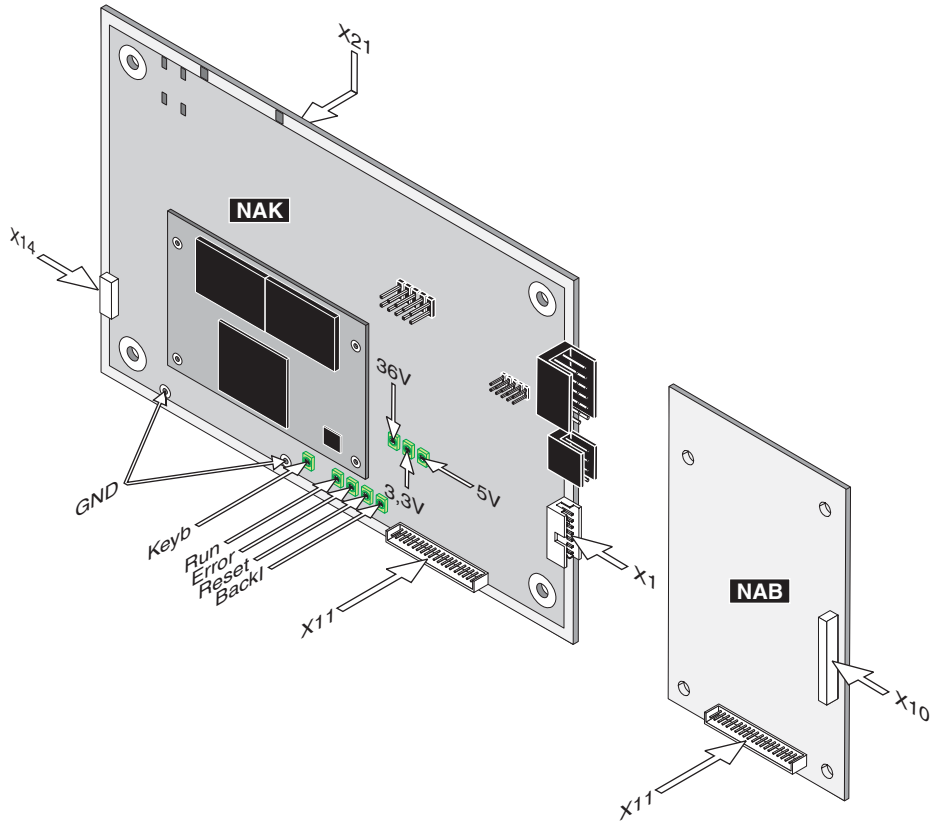

Board		Components on the board		
NAK	User interface to dentist element baseboard	LED 3V3 -	(Green)	Operating voltage
		LED 36 V -	(Green)	Operating voltage
		LED 5 V -	(Green)	Operating voltage
		LED Backl -	(Green)	No function at present
		LED Error -	(Red)	Lights up when there's an error on the PCB
		LED Keyb -	(Orange)	Lights up during activation of the ext. Keyboard
		LED Reset -	(Red)	Lights up briefly after the unit is switched on
		LED Run -	(Green)	Flashes during normal operation
		X1	> L246 > X1 > NAJ	
		X11	> NAB	
		X14	> Touch connection	
		X21	> Display connection	

Function of the NAK board

- Control of a 7" TFT display
- Control of the user interface functions
- Touch evaluation
- CAN for BHE control
- S-CAN for comfort functions
- Communication with NAB via serial interface (keyboard/indicator LEDs)
- Power supply 5 V, 3.3 V for operation of the user interface
- Forwarding of the ON/OFF signal from the NAB PCB to the NAJ PCB

- Keyboard click
- Control of the operation indicator derived directly from the operating voltage.

NOTE

In case of a fault during the warranty period, please replace the complete user interface.
Exception: During the warranty period the customer damaged the operating film and wants it replaced. This is not a warranty case. However, in order to keep costs down, the front plate can be replaced. Please comply with the installation instructions for the front plate.

NAB board LED board

Board		Components on the board	
NAB	LED board	X10	Connection of the ext. key matrix and ON/OFF button
		X11	> Connector for the NAK board

Function of the NAB board

- Evaluation of the ext. keyboard
- Communication with NAK via serial interface
- Control of the function and cursor LEDs
- Forwarding of the ON/OFF signal

2.4.6 NAL board - SL motor control

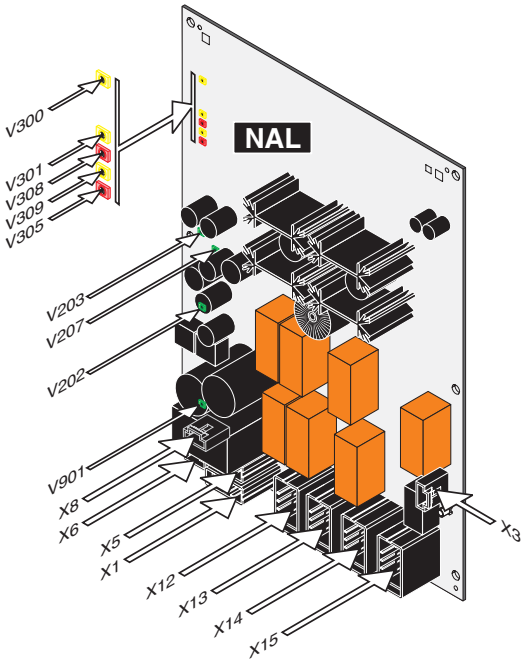

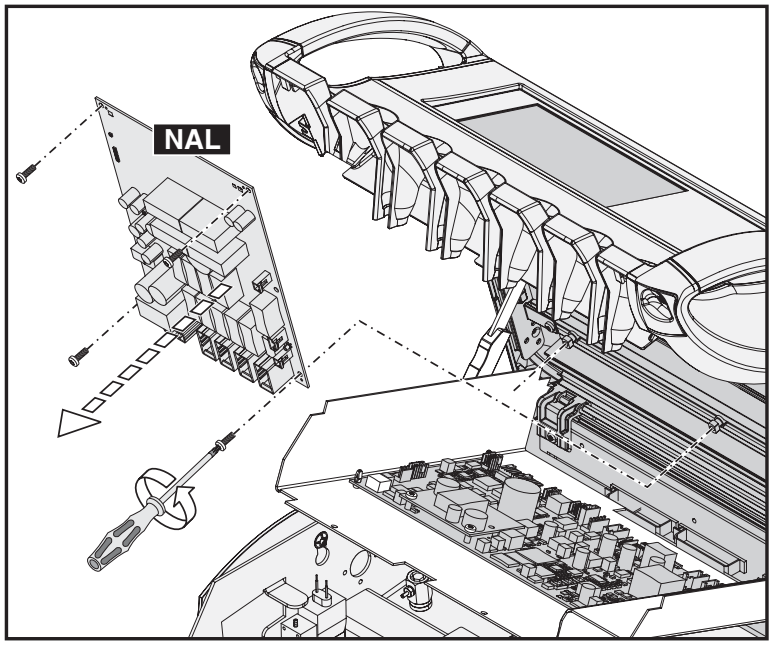

Board		Components on the board			
NAL	SL motor control	V202 -	36 V	(Green)	
		V203 -	3V3	(Green)	
		V207 -	5V	(Green)	
		V300 -	RUN	(Yellow)	Flashes during standby 1 Hz Flashing when instrument is active 10 Hz
		V301 -	BOOT	(Yellow)	
		V305 -	RESET	(Red)	Lights up briefly after unit is switched on
		V308 -	ERROR	(Red)	
		V309 -	CLAW	(Yellow)	Indicates the active instrument holder pos. via flash code
		V901 -	5V EK	(Green)	
		X1	> L248 > X1.16 / X1.17 AK		
		X3	> L251 > Flange_Scaler		
		X5	> Option_PK_Supply		
		X6	> Option_PK_Communication		
		X8	> L244 > X8 NAJ		
		X12	> L258 > Holder 2		
		X13	> L258 > Holder 3		
		X14	> L258 > Holder 4		
		X15	> L258 > Holder 5		

Function of the NAL board

- This board is integrated in the workstation via CAN and takes over the control of the brush dental motors and turbines.
- Supply for instrument light (halogen or LED).

2.4.7 NAU board - USB connector to AE

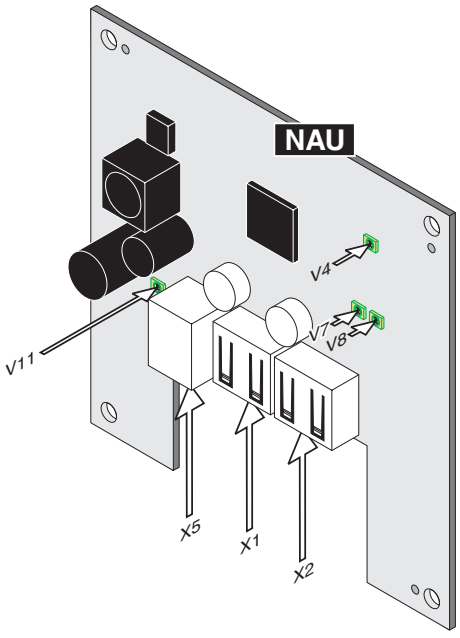

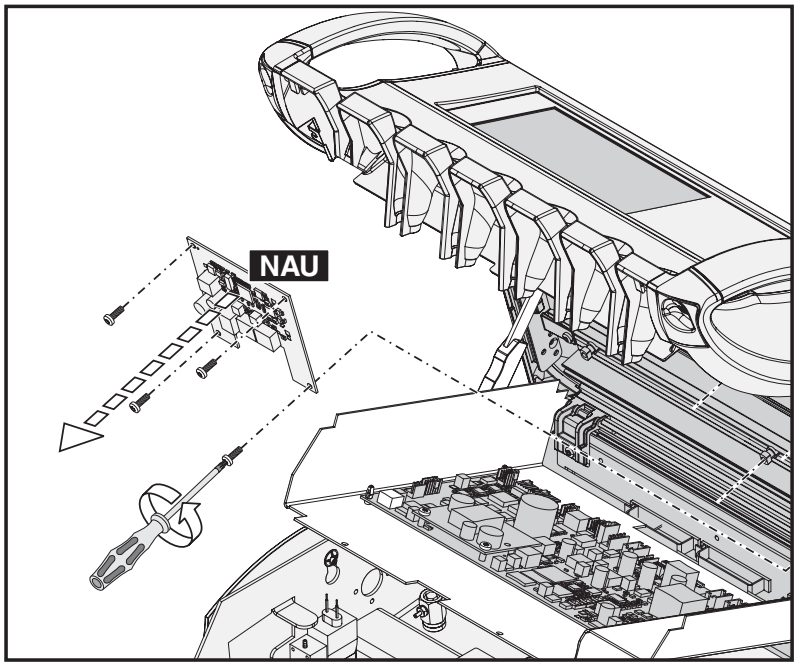

Board		Components on the board	
NAU	USB connector to AE	V4 - 3V3	(Green)
		V7 - X1	(Green) ON > when connector X1 is occupied
		V8 - X2	(Green) ON > when connector X2 is occupied
		V11 - 12V5	(Green)
		X1 > USB camera	
		X2 > USB device	
		X5 > L261 > X1.20 - X1.23 AK	

Function of the NAU board

- USB HUB for 2 USB connections

2.5 ... in the X-ray viewer

2.5.1 NAR board - X-ray viewer

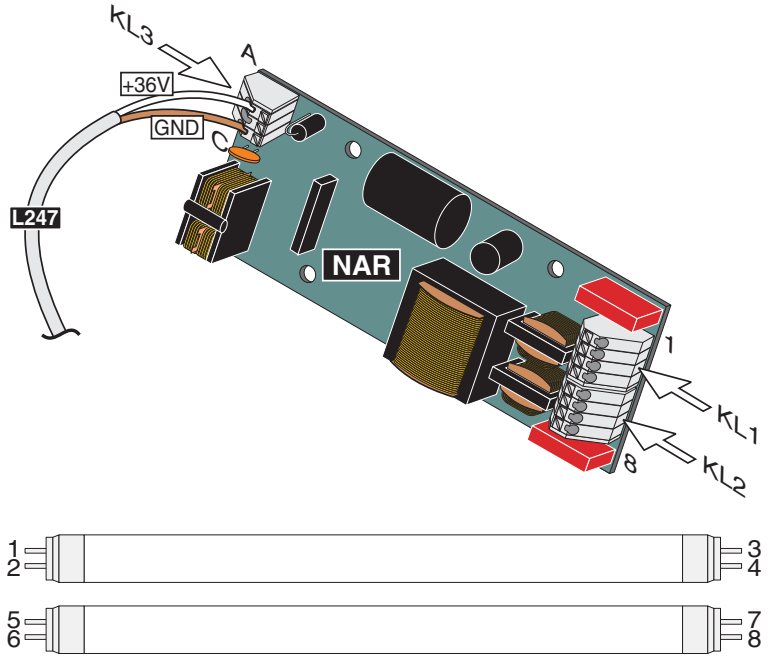

Board		Components on the board
NAR	X-ray viewer board	KL3 -> L247 -> X15 NAJ or X15 NAW

Function of the NAR board

- Control of the fluorescent tubes in the X-ray viewer

NOTE

The bridge at X15.A1 to X15.B1 on L247 is used to detect whether an RÖBI is present.

X-ray viewer on dentist element

NAJ board supplies operating voltage of 36 V with current limitation on output X15.A2.
The output on X15.B2 is switched against GND when the RÖBI is switched on.

X-ray viewer on tray

NWE board switches the current-limited operating voltage of +36V on at output X15.A2.
Connector X15.B2 is firmly connected to GND.

2.6 ... in the assistant element

2.6.1 NHE board - ASE control

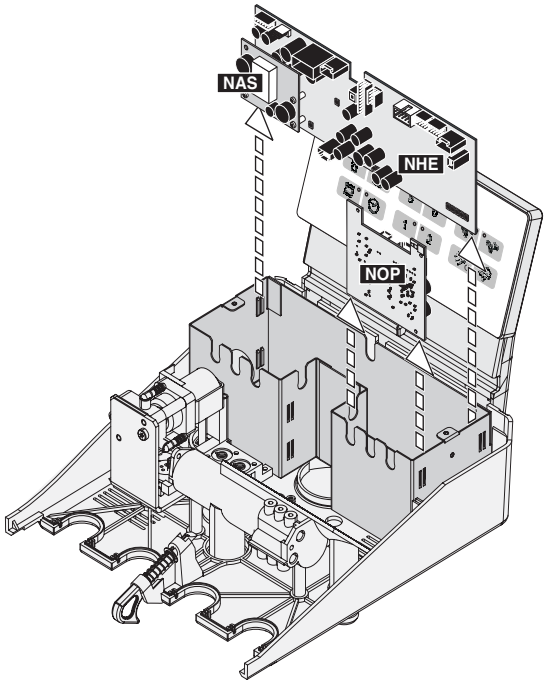

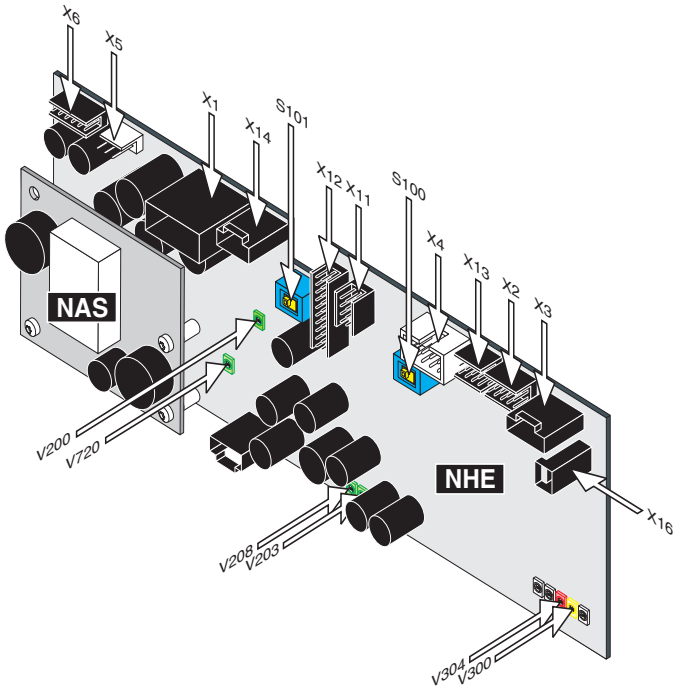

Board		Components on the board	
NHE	ASE control	V200 - 36 V	(Green)
		V203 - 3V3	(Green)
		V208 - 5V	(Green)
		V300 - Heart	(Yellow) Flashes once per second in normal operation
		V304 - Error	(Red) Flash code
		V720 - P5V	(Green) ON > Sprayvit removed Sprayvit supply ON
		X1 > L323 > X2 (SDI) AK	
		X2 > MV31/32, MV36/38/39 KL1-4	
		X3 > L236 > X3 NOP (Option Mini LED)	
		X4 > L231 > X2 (SDI) AK	
		X5 > L237 > KL2 (Sprayvit / Light)	
		X6 > L237 > KL2 (Sprayvit / Light)	
		X12 > L233 > X12 NHT	
		X16 > L216 > MV44 (Hydrocolloid)	

Function of the NHE board

- The NHE board controls all TENEO assistant element functions that are installed as standard in the dental treatment center. In addition, the optional mini-LED can also be connected to this board. A further interface for a future option such as a new polylight is likewise provided.
- Activation and analysis of the
  - ASE keyboard
  - Light barriers on the instrument holder (control of IR light barrier for the holder)
  - Solenoid valve (Mv power stage)
  - Sprayvit (Sprayvit CTRL and supply)
- Communication with other components (communication part)

2.6.2 NHT board - ASE user interface

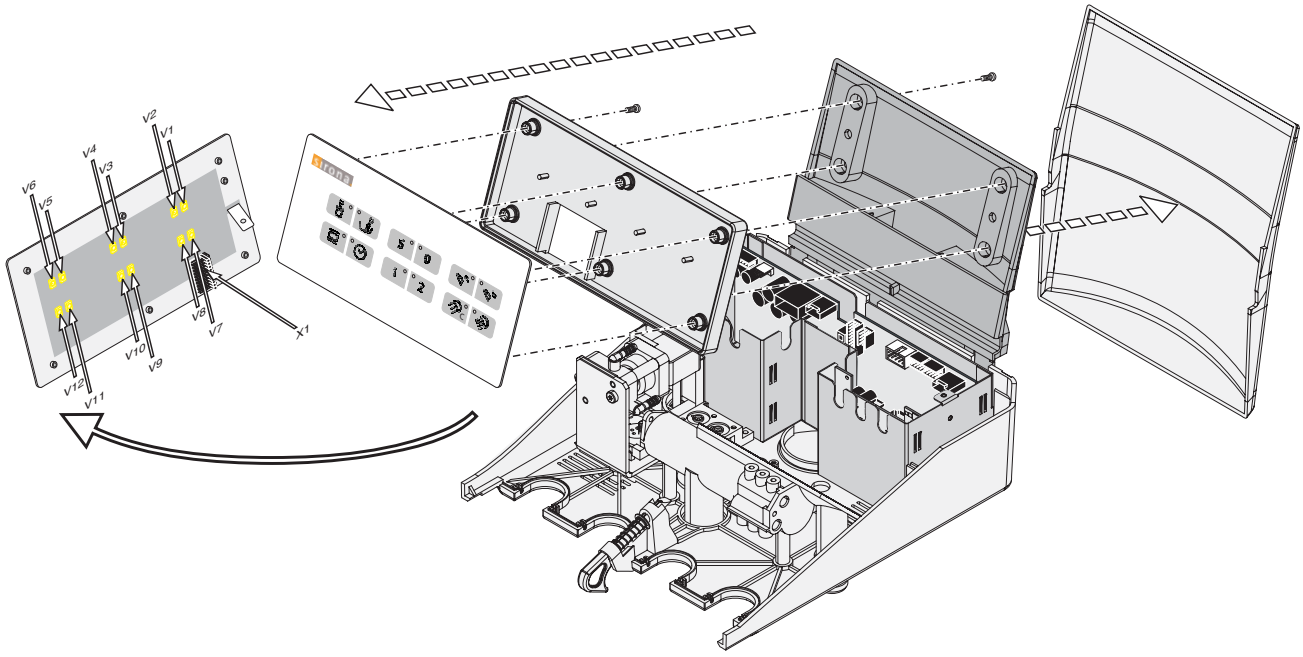

Board		Components on the board	
NHT	ASE user interface	V1 - Glass filling	(Yellow)
		V2 - Flushing	(Yellow)
		V3 - S-key	(Yellow)
		V4 - 0-key	(Yellow)
		V5 - Headrest UP	(Yellow)
		V6 - Headrest DOWN	(Yellow)
		V7 - X-ray viewer	(Yellow)
		V8 - Timer	(Yellow)
		V9 - Program 1	(Yellow)
		V10 - Program 2	(Yellow)
		V11 - Composite	(Yellow)
		V12 - Sirolux	(Yellow)
		X1 > L233 > X12 NHE	

Function of the NHT board

- The NHT board is controlled by the NHE board. The keyboard is evaluated with a key matrix and the LEDs are activated directly.
- The LEDs are always switched on by the NHE software when they receive the acknowledgment from the corresponding component that the function has been activated.
- There is no acoustic feedback when the key is activated.

2.6.3 NOP board - 5 V power supply

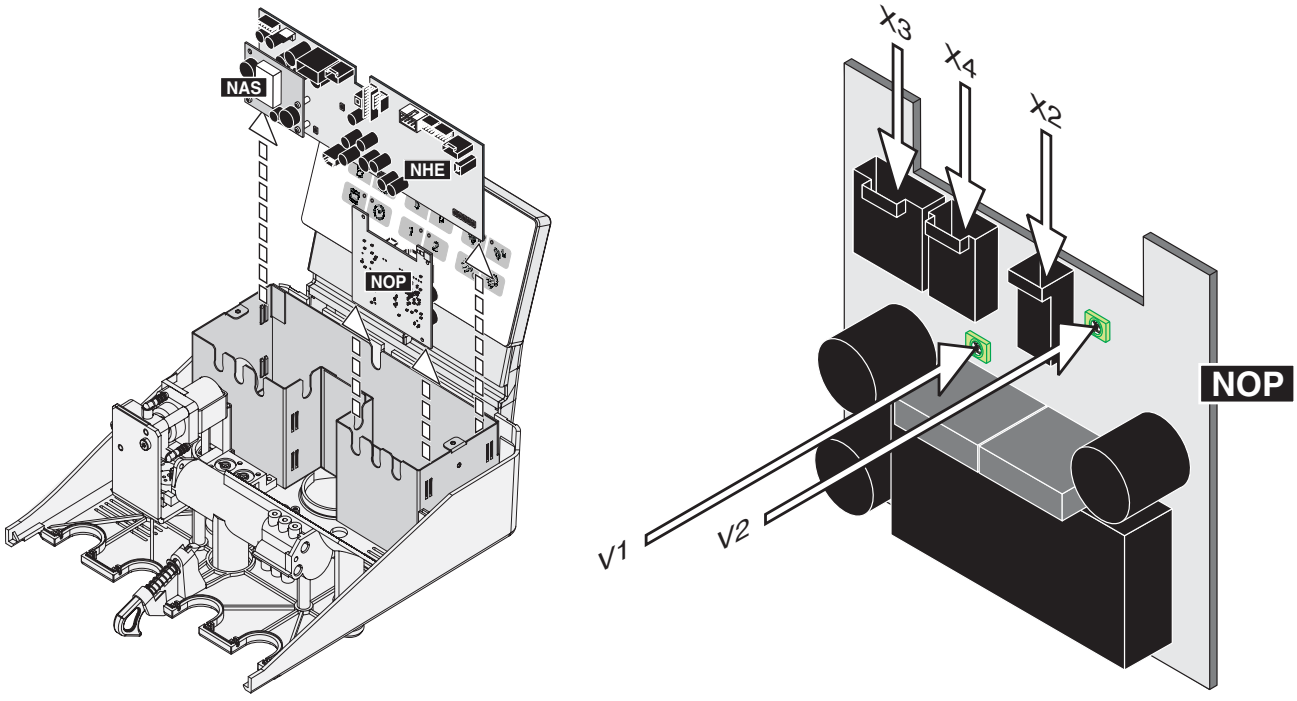

Board		Components on the board	
NOP	5 V power supply	V1 - +33V	(Green)
		V2 - +5V	(Green)
		X2 > L238 > Mini LED	
		X3 > L236 > X3 NOP (Option Mini LED)	
		X4 > L238 > Mini LED	

Function of the NHT board

- Universal 5V power supply (e.g. for the mini-LED

2.7 ... in the water unit

2.7.1 NWE board - Water unit control

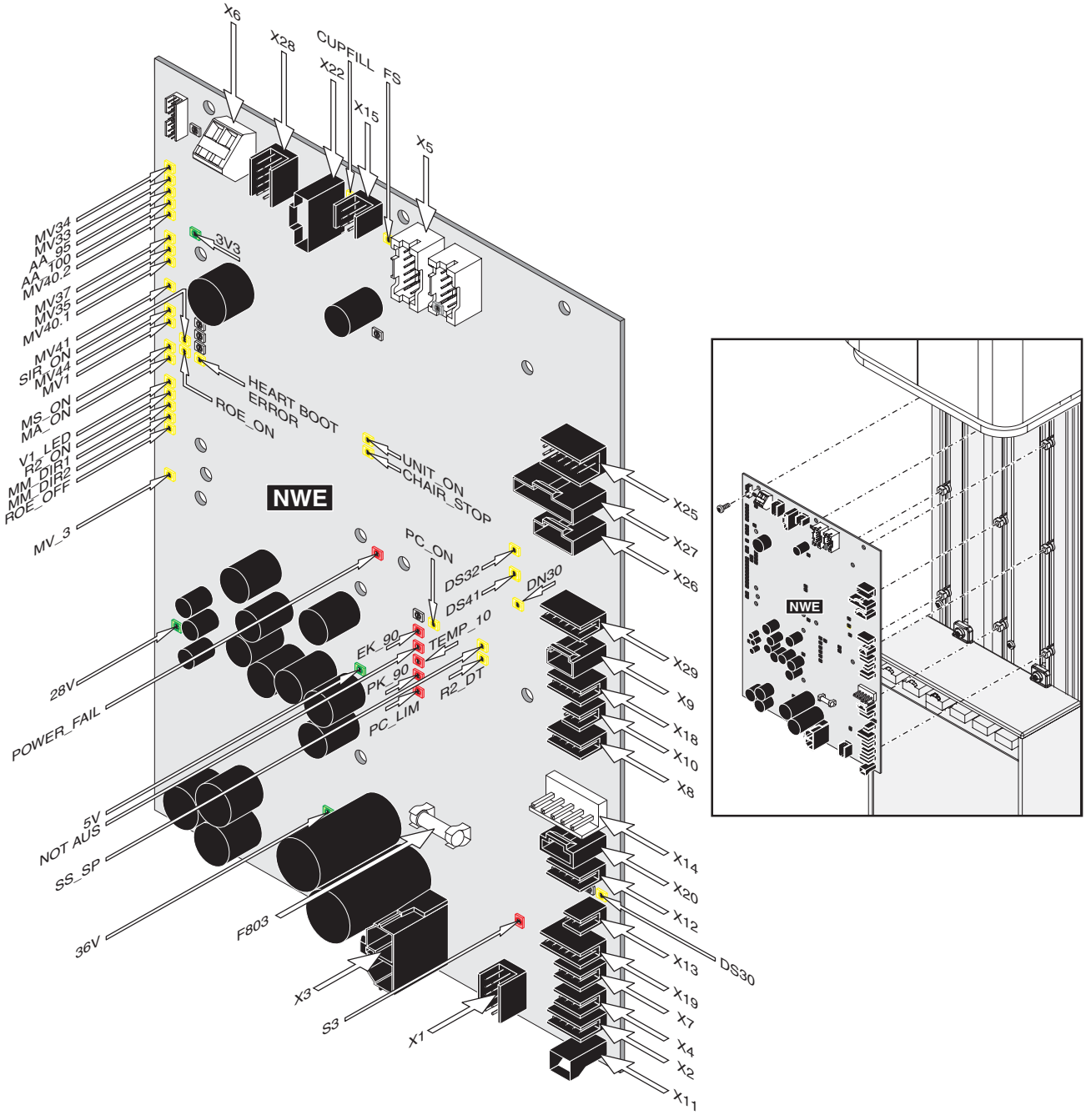

Board		Components on the board	
NWE	Water unit control	F803 - 10AT - Main fuse for the water unit	
		LED 3V3-	(Green)
		LED 5 V -	(Green)
		LED 28 V -	(Green)
		LED 36 V -	(Green)
		LED BOOT -	(Yellow) Lights up briefly while booting Permanently ON > Connection to NSA board not present or NAJ board is defective

Board	Components on the board	
	LED DS30 -	(Yellow) ON > Filling level of Sepa tank OK OFF > Suction will be switched off
	LED DS32 -	(Yellow) ON > Disinfectant tank at lower filling level
	LED DS41 -	(Yellow) ON > Flushing tank at lower filling level
	LED DN30 -	(Yellow) ON > Waste water from cuspidor
	LED FS -	(Yellow) foot control active
	LED HEART-	(Yellow) Flashes once per second during normal operation
	LED ERROR-	(Yellow) Flash code
	LED POWER_FAIL-	(rot) ON > 36 V Operating voltage under 34V
	LED R2_DT -	(Yellow) ON > Tumbler heater present and ready for operation OFF > Heater active when LED_R2ON (Yellow) = ON
	LED R2_ON -	(Yellow) ON > heater switched on
	LED S3 -	(rot) Safety switch AA S3
	LED SS_SP-	(Yellow) Safety switch cuspidor.
	Power pack signal:	
	LED EK_90-	(Red) ON > Power supply unit load > 90% in input circuit
	LED TEMP_10-	(Red) ON > Power supply unit overheating shutdown in 10 seconds
	LED EMERGENCY OFF-	(Red) Power supply unit switches off
	LED PK_90-	(Red) ON > Power supply unit load > 90% in patient circuit
	LED PC_LIM-	(Red) ON > PC video circuit in current limitation
	LED PC_ON-	(Yellow) ON > Video circuit switched on OFF > Video circuit switched off (Sirotom removed)
	LED UNIT_ON-	(Yellow) ON > ON / OFF pressed on the dentist element user interface
	LED CUPFILL-	(Yellow) ON > Morita > Switch on MV34 (tumbler filling)
	LED CHAIR_STOP	(Yellow) ON > Motion lock via active instrument
	LED MM_DIR1-	(Yellow) ON > Cuspidor motor rotary direction 1
	LED MM_DIR2-	(Yellow) ON > Cuspidor motor rotary direction 2
	LED MV3-	(Yellow) ON > Disinfectant dosage valve switched on
	LED SIR_ON-	(Yellow) ON > Sirolux switched on
	LED ROE_ON-	(Yellow) ON > X-ray viewer switch-on signal
	LED ROE_OFF-	(Yellow) ON > X-ray viewer switch-off signal
	LED MS_ON-	(Yellow) ON > Sepa motor switched on
	LED MA_ON-	(Yellow) ON > Amalgam separator switched on
	LED V1_LED-	(Yellow) ON > Light barrier signal when amalgam separator is running
	LED MV40.1-	(Yellow) ON > Right chamber of the water pump is active
	LED MV40.2-	(Yellow) ON > Left chamber of the water pump is active. If water is removed, then the LED MV40.1 and MV40.2 flash alternately
	LED MV41-	(Yellow) ON > Filling valve for rinsing tank is switched on
	LED MV44-	(Yellow) ON > Hydrocolloid valve switched on
	LED MV1-	(Yellow) ON > Filling valve for mixing tank is switched on
	LED MV34-	(Yellow) ON > Filling valve for tumbler is switched on
	LED MV33-	(Yellow) ON > Location selection valve for suction is switched on
	LED AA95-	(Yellow) ON > Filling level of amalgam rotor is > 95%
	LED AA100-	(Yellow) ON > Filling level of amalgam rotor is 100%
	LED MV 37-	(Yellow) ON > Water cover of drain to amalgam separator is open
	LED MV35-	(Yellow) ON > Flushing is switched on
	X1 > L207 > X1 Power supply	

Board		Components on the board
		X2 > Centrifuge_motor amalgam separator
		X3 > L206 > X3 Power supply
		X4 > Amalgam separator
		X5 > L205 > X6 > L305 > X2 NSA
		X6 > Sirolux F
		X7 > S3 Amalgam separator
		X8 > L217 > Water detector - MV37 and DN30
		X9 > L219 > MV35 Flushing
		X10 > DNA float switch
		X11 > L221 > MV34 Cup fill
		X12 > MV33 Automatic separator
		X13 > DS30 Automatic separator
		X14 > Heater
		X15 > L215 > X-ray viewer
		X18 > DNA Cuspidor valve
		X19 > M8 Automatic separator
		X20 > L18 > M9 Motor / S13 Cuspidor
		X22 > L220 > CN1 / CN3 Morita PCB
		X25 > L208 > Sensor1 HS1 / Sensor2 HS2 Pump > MV40.1 / MV40.2 Pump
		X26 > L224 > MV3 Disinfection > DS32 Disinfection
		X27 > L223 > MV1 Disinfection > DS31.1 / DS31.2 Disinfection
		X29 > L201 > MV41 Flushing vessel > DS41 Flushing vessel

Function of the NWE board

The NWE board controls all functions listed below

- Cleaning system
- Chemical disinfection system
- Hydropneumatic pump
- Standard tumbler filling with heater
- Automatic tumbler filling
- Swivel unit for cuspidor
- Automatic separation
- Amalgam separator with water alarm
- Wet suction with cleaning button
- Flushing
- X-ray viewer on the tray
- Hydrocolloid solenoid valve
- Sirolux examination light
- Communication with other components of the dental treatment center
- Central power supply
- Acoustic signal sensor for amalgam alarm, programming confirmation, etc.
- Filling level detection via magnetically closing reed contacts:
  - Mixing tank with upper (DS31.1) and lower (DS31.2) filling level sensor
  - Disinfection tank only with lower filling level sensor (DS41)
  The position of the pistons of the water pump is recorded magnetically analog via Hall sensors.

2.7.2 NWM board - Automatic tumbler filling

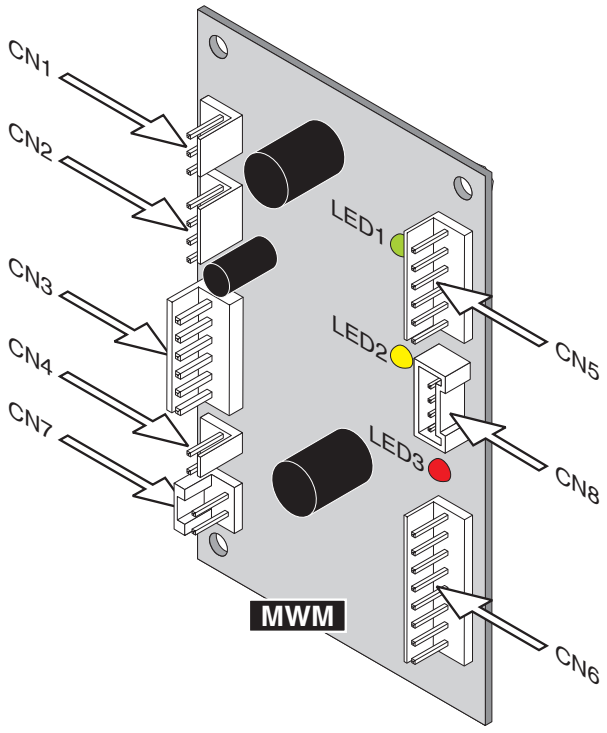

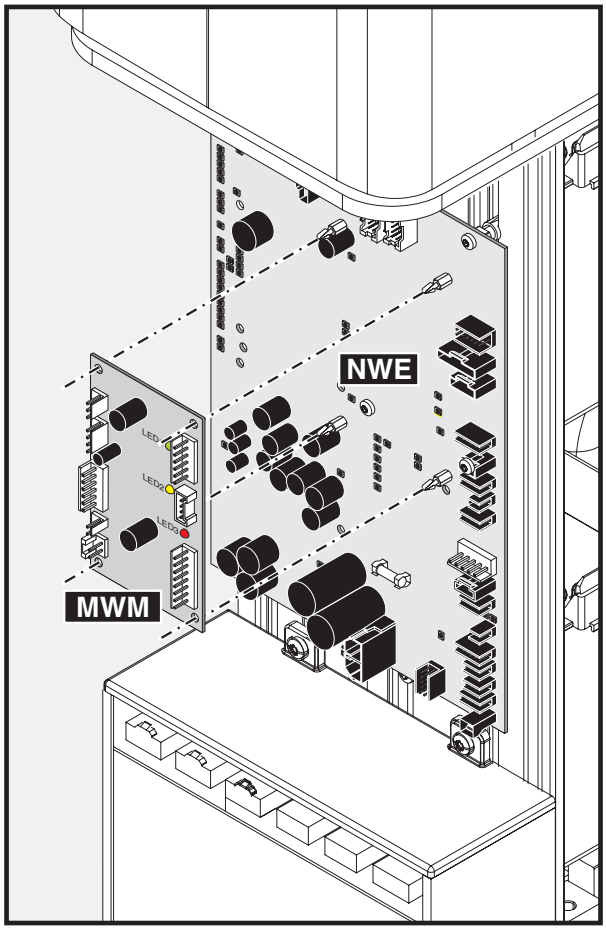

Board		Components on the board	
NWM	Automatic tumbler filling	LED1 - +15 V - Operating voltage	(Green)
		LED2 - Cup - Cup recognized	(Yellow)
		LED3 - Water level - Filling level achieved	(Red)
		CN1 > L220 > X22 NWE (Power supply)	
		CN3 > L220 > X22 NWE (Relay output)	
		CN4 > Potential filling level	
		CN5 > Light barrier	
		CN6 > Filling sensors	
		CN4 >	
		CN5 > Photo IC / IR LED	
		CN6 >	

Function of the NWM board

- Automatic tumbler filling (option only for Japan)

sirona.
The Dental Company

3 Important information

TENEO

3.1 Switching the dental treatment center ON/OFF

After switching on the operating power supply, the boot loader is started on all boards. The software of the NSA board checks all components to see whether they are up-to-date.
If they are not, an update is started (this can be done after a board is replaced).
If the software is up-to-date, it will be given approval to start, the corresponding booting LEDs go out and the application software is loaded.

The green LED on the user interface is electronically coupled directly to the 36 V operating voltage.

If the dental treatment center is switched off at the user interface, the water unit emits a short beep to confirm the shutdown. If the DNA option is installed, the DNA tank is emptied before the dental treatment center is really switched off. In rare cases this may take up to 15 seconds. After the unit is switched off via the user interface, the treatment center can switched on again via the user interface if it has not been switched off at the main power switch.

3.1.1 What happens when it is switched on?

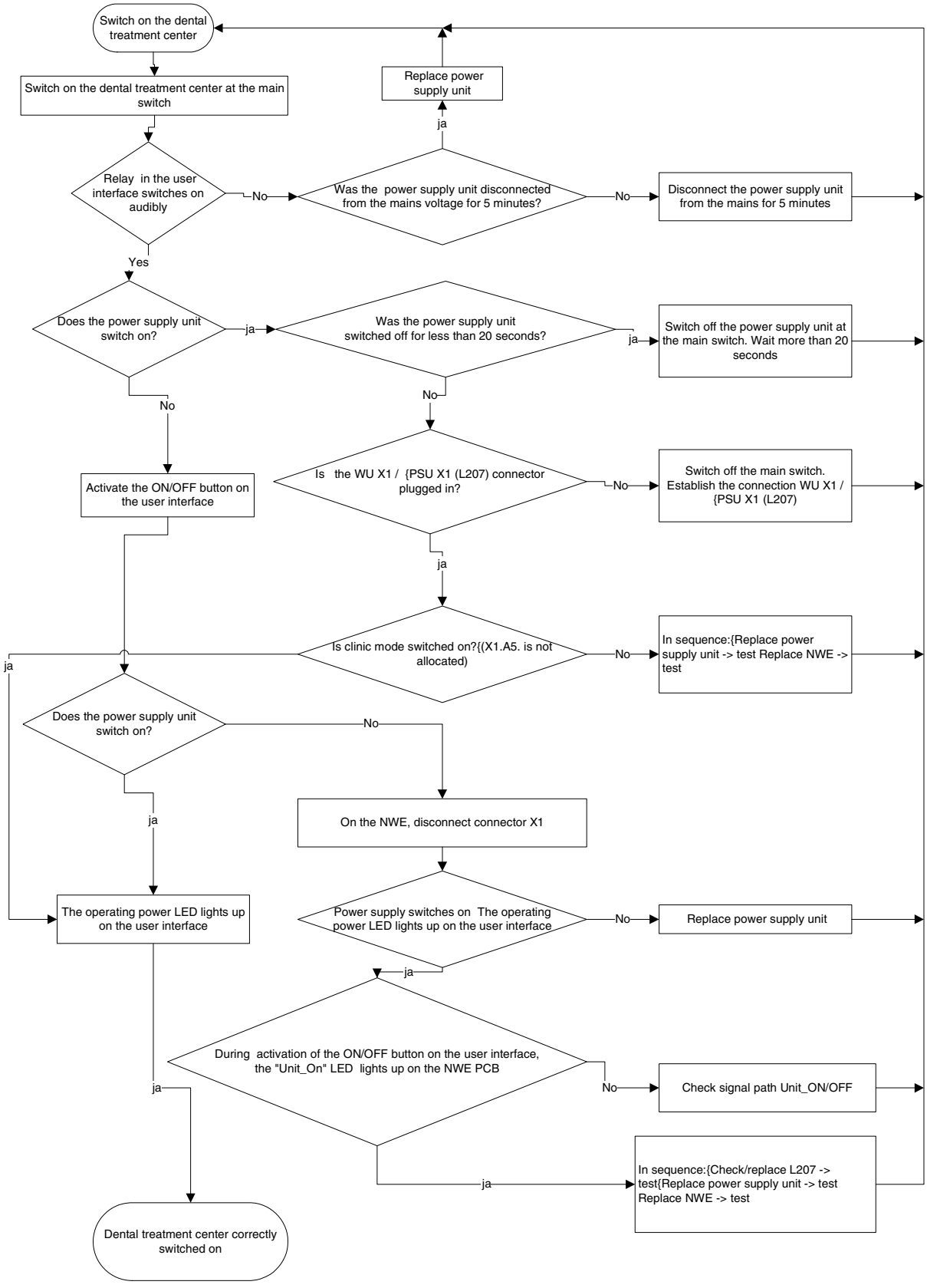

3.1.2 What happens when it is switched off?

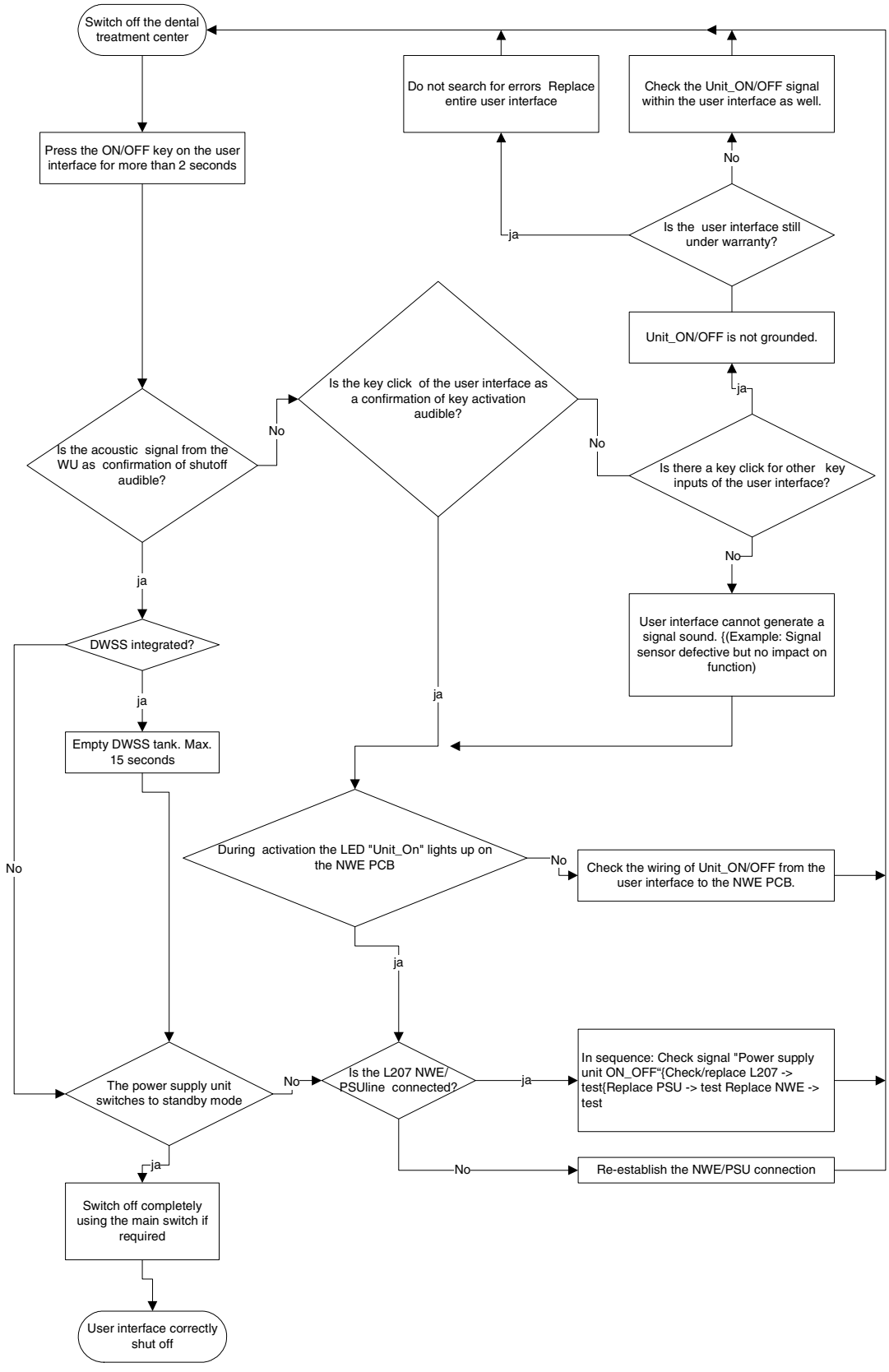

3.1.3 Signal path of the ON/OFF signal

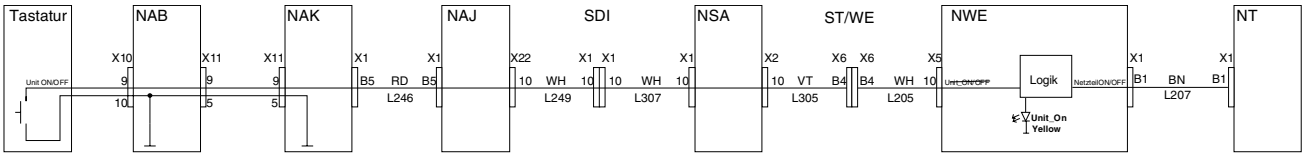

	Unit_ON/OFF: (keyboard to NWE)	Power supply unit_ON/OFF: (NWE to NT)
Switching on	Approx. 8-10 V when ON/OFF key is not pressed 0 V when the ON/OFF key is pressed	Approx. 8-10 V when the ON/OFF key is not pressed Approx. 0.5 V when the ON/OFF key is pressed
Switching off	Approx. 28 V when the ON/OFF key is not pressed Approx. 0.1 V when the ON/OFF key is pressed	Approx. 8-10 V when the ON/OFF key is not pressed Approx. 0.5 V when the ON/OFF key is pressed

3.2 CAN BUS

In the treatment center there are several **CAN** networks.
The**standard CAN** runs all of the control units for the treatment center, software updates and service support.

The **S CAN** runs only PC software functions for the **user interface**.
The **motor CAN** runs all commands for controlling the motors**M1** / **M2** / **M3** from the**NSA board** to the three **DCFU** boards.

After the treatment center is switched on, all components and software are queried and displayed in the set-up dialog. If the connection fails during operation, the unit must be switched on again.

SET-UP key

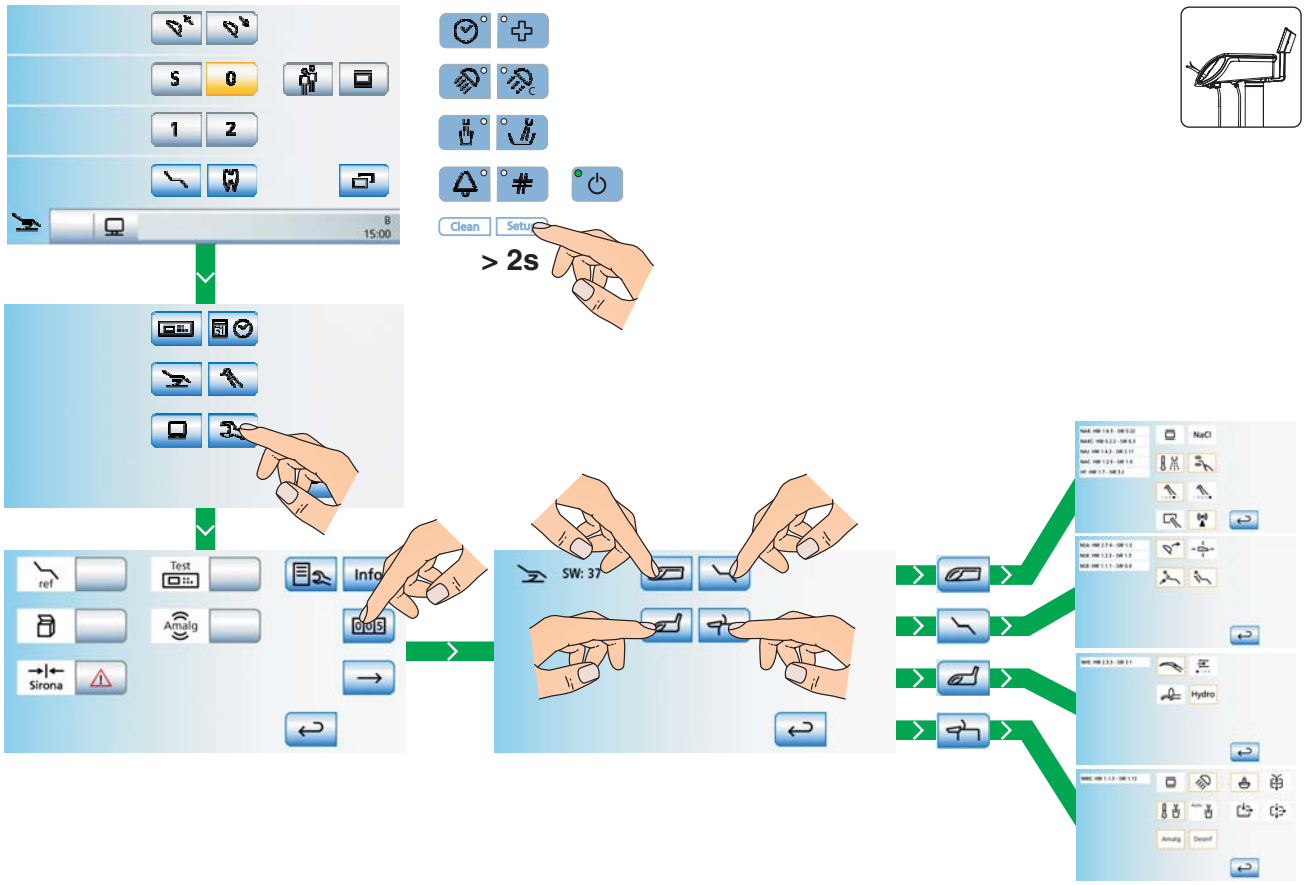

If an installed component is missing here, this board and the CAN connection to the user interface (**NAK**board) must be checked.

Each node that loses its **standard CAN connection** to the central error memory in the **NSA** board flashes cyclically 2x at its **error LED**. -> Check the CAN bus.

In each CAN network there are 2x 120-Ohm resistors, that, measured in parallel on the CAN line, result in 60 Ohms. If you measure 120 Ohms on the CAN line with an Ohm meter (when the dental treatment unit is switched off), there is a disruption in the line.

In the case of a disruption, measure the connections between the connectors.

For example:
Check CAN^{+}: NSA **board**, X1.5 to NAJ**board** X22.5:

0 - 3 Ohm = OK
00 Ohm = line disruption
240 Ohm = line disruption CAN+ but CAN- is OK

3.3 CAN BUS wiring diagram

Standard CAN

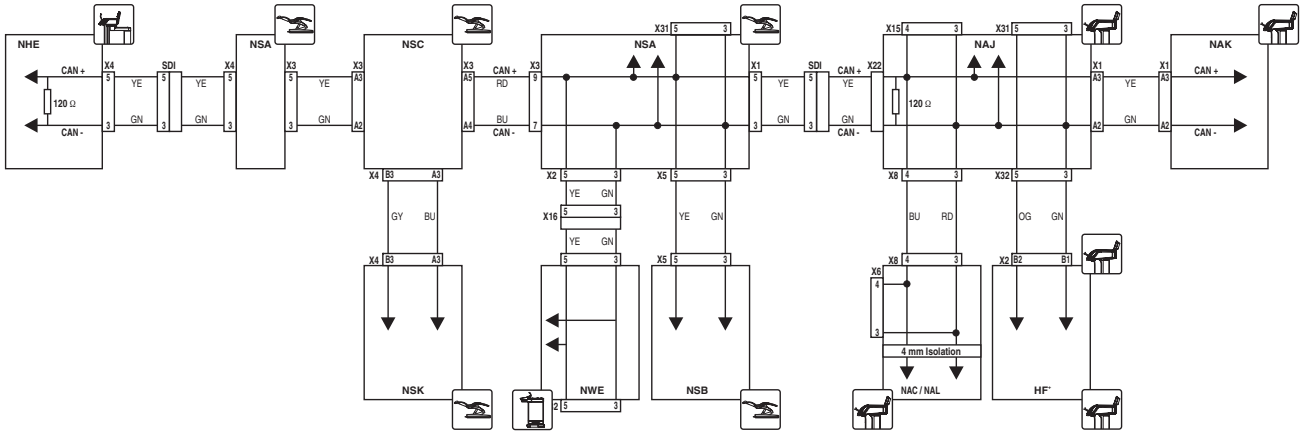

Speed CAN

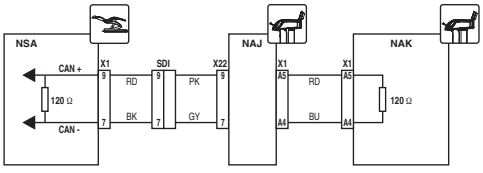

Motor CAN

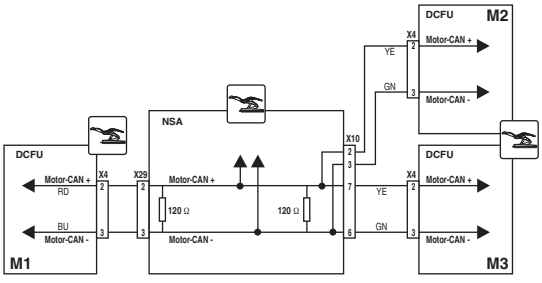

3.4 Patient chair

3.4.1 Stand-alone installation function

To operate the chair in stand-alone mode, the installation connector must be connected to the SDI connector of the assistant element (on the chair). This connector closes off the CAN, simulates the safety switch in the assistant element and a bridge lets the NSA board detect the connector.

If the patient chair does not find any NAJ board while booting, the four-way switch functions on the foot control like a four-way foot switch. If the four-way foot switch and/or tilt component switch are present as options, these will function to support the set-up phase and operate the patient chair without the dentist element/assistant element.
Once the NAJ board is detected, patient chair travel will be carried out only with "approval of the NAK board".
During movement of the patient chair communication between the NSA and NAK boards will be monitored. If the communication is disrupted, the patient chair travel will also be disrupted or not started at all.

3.4.2 DCFU motor control

In the DCFU board, the motor parameters and motor allocation/addressing are stored for the motor to be activated.
There are two types of motor: one large motor (lifting motor) and 2 small motors (for inclination and backrest).
After the replacement of a DCFU board, the NSA board determines via the "reference travel" function which DCFU board is connected to which motor and will transmit the corresponding motor parameters.
During the reference travel, the motors are moved slowly to the end positions and the software of the NSA board stores those positions.
During operation, whenever a reference point is crossed via a light barrier at X5, the calculated position is compared with the actual position and corrected.

3.4.3 Safety switches (For the locations of the safety switches see Section 1.6, Safety switches)

- **Safety switch Backrest**
- SS_RL: S10 > L332 > NSA X14.B4 (A4 = SS-GND)
  LED: NSA / V402 (Yellow) / SS code / Flashes 8x

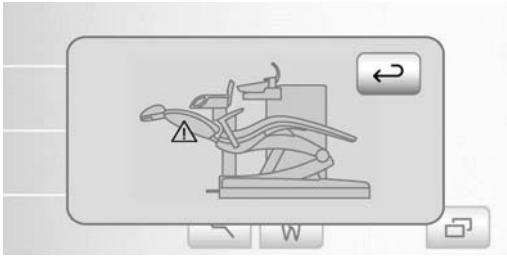

- **Safety switch, footrest**

SS_FA: S9 > L334 > NSA X14.B3 (A3 = SS_GND)
LED: NSA / V402 (Yellow) / SS code / Flashes 7x

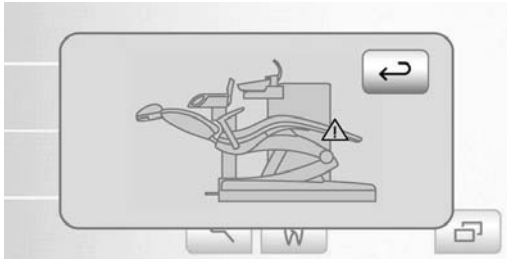

- **Safety switch, rear cover panels, right/left**
  Elevation frame rear, right/left
  Elevation frame front, right/left
- SS_HR: S1, S2, S3, S4 > L317 > NSA X12.2 (X12.1 = SS-GND)
  LED: NSA / V402 (Yellow) / SS code / Flashes 4x

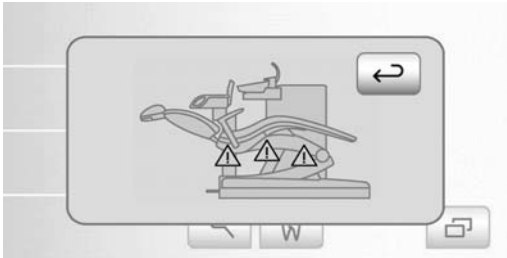

- **Safety switches on manual switch bar rear/front, right/left**
- SS_HL: S5, S6, S7, S8 > L331 > NSA X14.B2 (A2 = SS-GND)
  LED: NSA / V402 (Yellow) / SS code / Flashes 6x

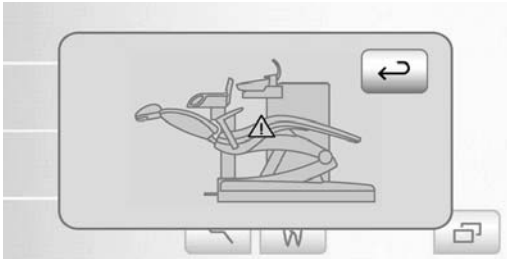

- **Safety switch, armrest**
- SS_AL: S11 > L342 > X13 > L335 > NSA X14.B6 (A6 = SS-GND)
  LED: NSA / V402 (Yellow) / SS code / Flashes 9x

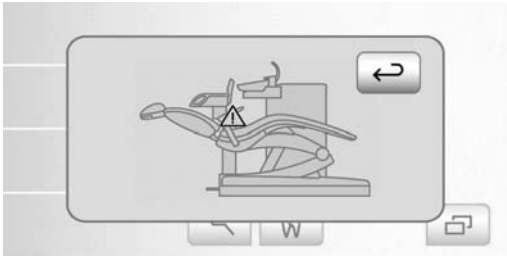

- **Safety switch, assistant element**

SS_HE: S14 > L235 > X2-SDI > L333 > NSA X13.2 (X13.1 = SS-GND)

- **Safety switch, cuspidor**
- SS_MB: S13 > L218 > NWE X20.2 (X20.1 = SS-GND)
  LED: NWE / SS_SP (Yellow) / ON
  LED: NSA / V402 (Yellow) / SS code / Flashes 3x

sirona.
The Dental Company

4 Service area

TENEO

4.1 Service area of the user interface

Entering the service area:

1. Hold down the "Setup" fixed key (>2 seconds). Six set-up programs will be offered for your selection.
2. To open one, touch the "Service Area" key. The service area will appear.
3. Touch the arrow key to get to the next screen.

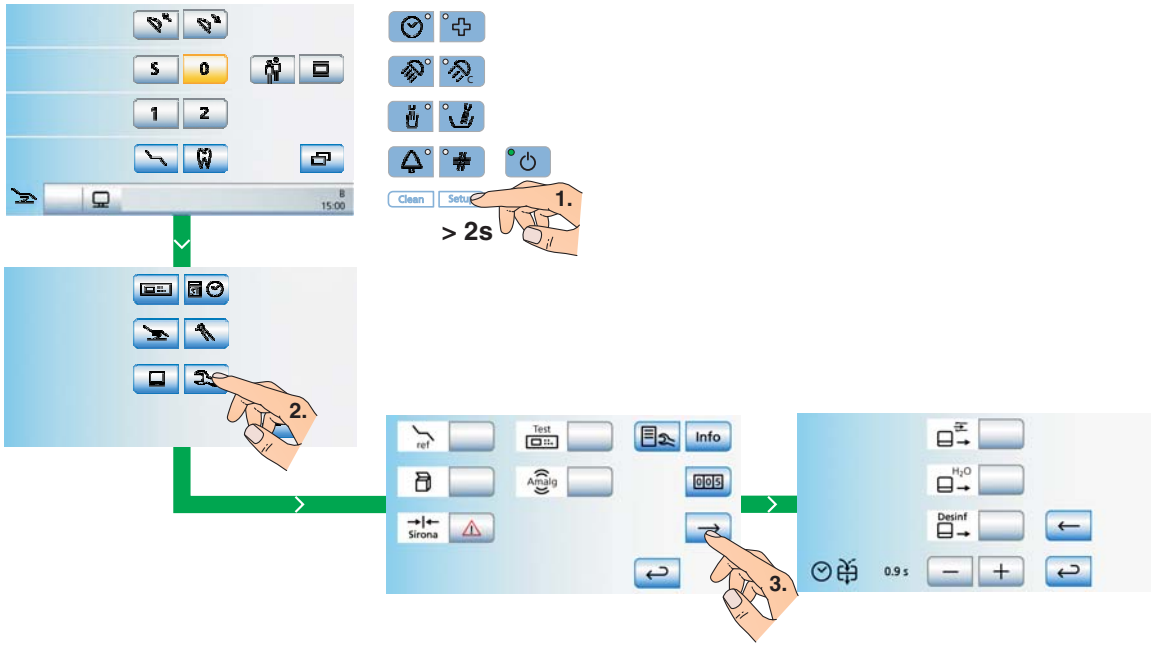

Meaning of the individual keys

Test	Start LED and keyboard test on the user interface. By pressing the keys on the discrete keyboard, the corresponding function LEDs can be switched on and off. When you press "Clean", the 4 cursor LEDs are also activated.
H_2O	Emptying of the mixing tank
ref	Chair reference path
Sirona	Restoration of the factory settings
Amalg	Amalgam test key for the alarm tone and amalgam indicator
Desinf	Emptying of the disinfectant tank
	Emptying of the flushing tank
	Approach packaging position
	Service info / Service code lists
	Maintenance interval display and reset
Info	Dental treatment center information on design versions and installed options
	Back
2.75 s	Set opening time for cuspidor valve

4.2 Dental treatment center information

After you press the "Info" key, the configuration screen will appear.

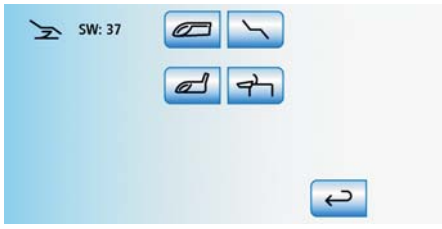

4.2.1 Dentist element configuration INFO

Press the "Dentist Element" key.
The option is available if there is an orange frame around the option.

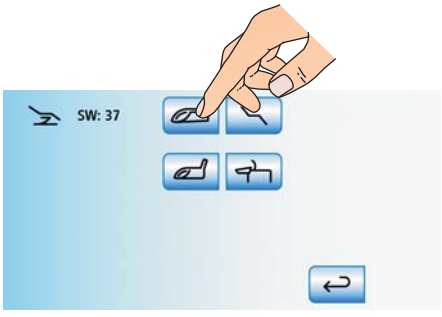

NAK: HW 0.0.0 - SW 0.5	Hardware and software version for the NAK board
NAKC:	Operating system NAK version, HW version NAK processor module
NAJ: HW 0.0.0 - SW 0.0	Hardware and software version of the NAJ board
NAC: HW 0.0.0 - SW 0.0	Hardware and software version of the NAC board
HF: HW 0.0 - SW 0.0	Hardware and software version of the HF board
NAL: HW 0.0 - SW 0.0	Hardware and software version of the NAL board
	X-ray image viewer
	Spray water heater
	3. Burr drive
	4. Burr drive
	Intraoral camera
NaCl	NaCl pump
	Ultrasound
	Sirotom

4.2.2 Assistant element configuration INFO

Press the "Assistant Element" key.
The option is available if there is an orange frame around the option.

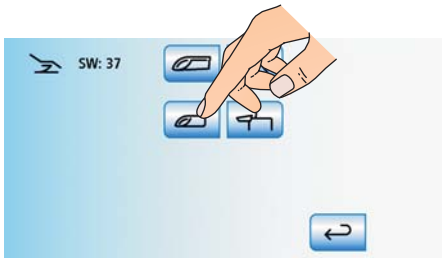

NHE: HW 0.0.0 - SW 0.0	Hardware and software version of the NHE board
	Sprayvit
	Curing light
	3. Suction hose
Hydro	Hydrocolloid connection

4.2.3 Patient chair configuration INFO

Press the "Patient Chair" key.
The option is available if there is an orange frame around the option.

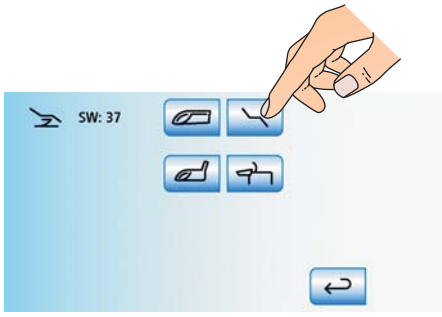

NSA: HW 0.0.0 - SW 0.0	Hardware and software version of the NSA board
NSK: HW 0.0.0 - SW 0.0	Hardware and software version of the NSK board
NSB: HW 0.0.0 - SW 0.0	Hardware and software version of the NSB board
	Motor-driven headrest
	Active lumbar support function
	Massage function
	Four-way foot switch

4.2.4 Water unit configuration INFO

Press the "Water Unit" key.

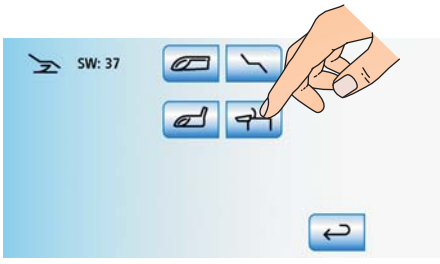

The option is available if there is an orange frame around the option.

NWE: HW 0.0.0 - SW 0.0	Hardware and software version of the NWE board
	X-ray image viewer
	Tumbler water heater
Amalg	Amalgam separator
	Operating light
Auto	Automatic tumbler filling
Disinf.	Disinfection system
	Motor-driven cuspidor Without frame: No cuspidor Without frame: Cuspidor without motor available
MV33	Air/water separation
	Dürr wet suction system
	Automatic separator

4.3 Reading out service codes

1. Hold down the "Setup" fixed key (>2 seconds). Six set-up programs will be offered for your selection.
2. To open one, touch the "Service Area" key. The service area will appear.
3. After you press the error storage key, the service code lists will appear..

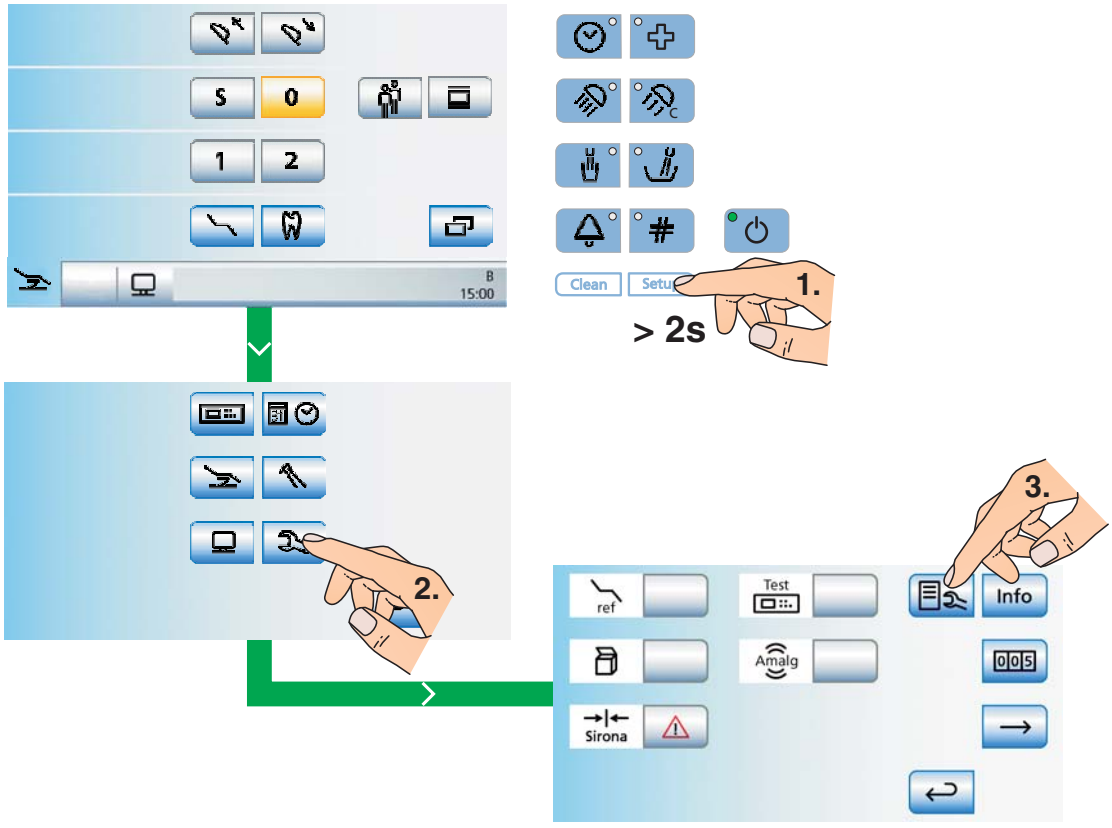

4.4 Maintenance display

After you press the operating data key, the screen for the maintenance intervals appears.

- This displays the number of days until maintenance must be performed.

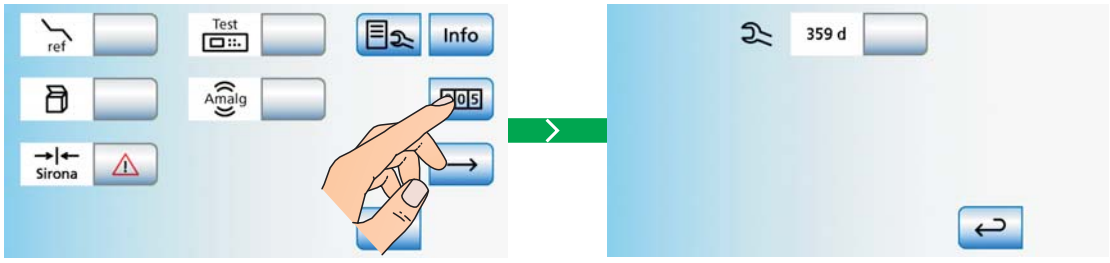

4.5 Service support with the PC

The program "Sirona **D**ental **U**nit **M**anagement **C**onsole" (Sirona **DUMC**) is available to support the service engineers. This program provides the following services:

- **Service management**
  (Readout and storage of service information)
- **Data management**
  (readout, storage, reloading of data in the treatment station, if for example boards must be replaced or if user-specific settings are to be transferred from one dental treatment center to another)
- **Firmware download**
  (Determine the version of a dental treatment center, download the new firmware, synchronize the firmware to a valid release, e.g. after individual boards have been replaced).

For more information about this program, please refer to the DUMC user manual: 61 94 489 D3509

sirona.
The Dental Company

5 Points to observe when replacing ...

TENEO

5.1 ... Boards

Before replacing the **NAJ**, **NSA**, **NWE**, **NHE** and**NAK** boards, you must back up the data with the **DUMC** program.

1. Back up data (all of it)
2. Replace board
3. Download firmware
4. Restore data if necessary

CAUTION

*Before any boards are replaced, the treatment center must be switched **OFF**!*

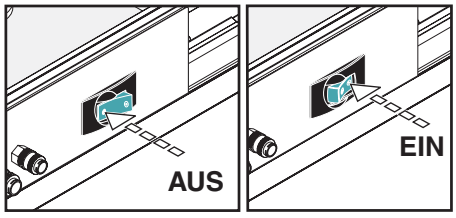

5.1.1 ... DCFU board in the patient chair

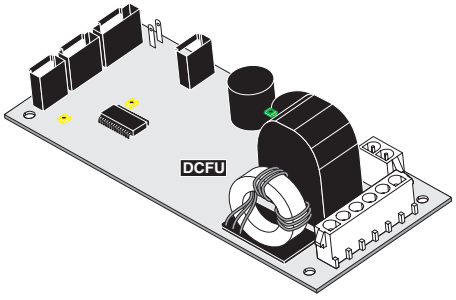

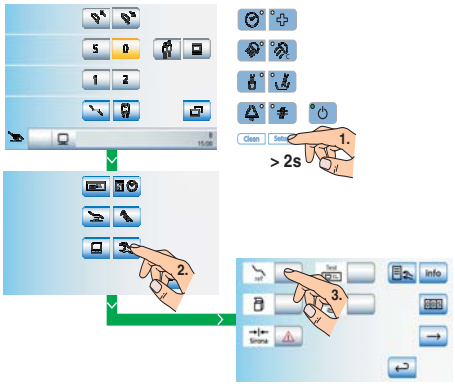

- After the **DCFU** board is replaced, a reference run must be carried out. To do this, push the key in the service area of the user interface on the dentist element 

.

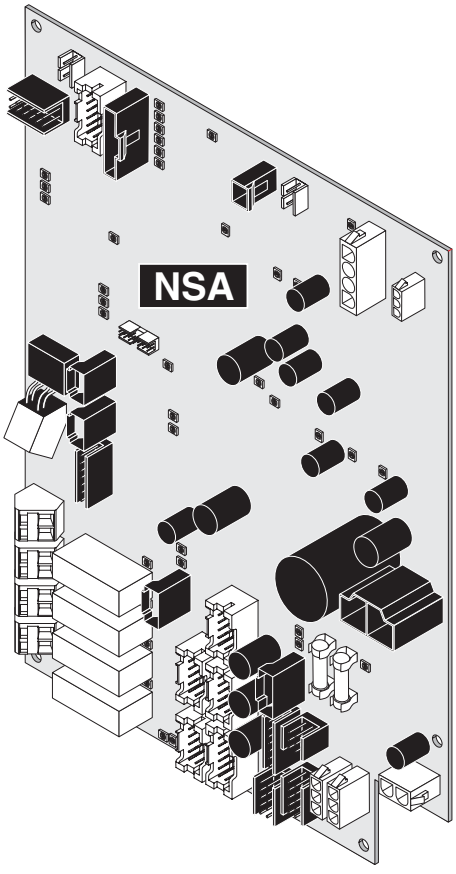

5.1.2 ... NSA board in the patient chair

- After the **NSA** board is replaced, a reference run must be carried out, as the reference for the travel track is stored here.
- To do this, press the ref key in the service area of the user interface on the dentist element.
- Check the date and time in the Set-up program.

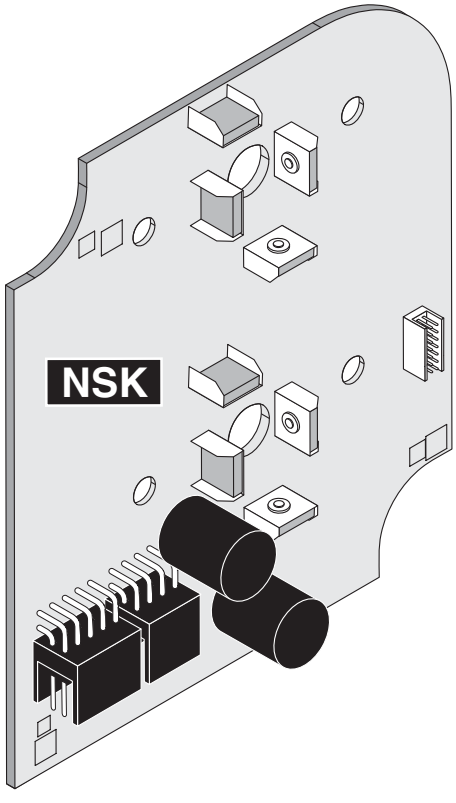

5.1.3 ... NSK board in the patient chair

- After the **NSK** board is replaced, a reference run must be carried out, as the reference for the headrest is stored here.
- To do this, press the ref key in the service area of the user interface on the dentist element.

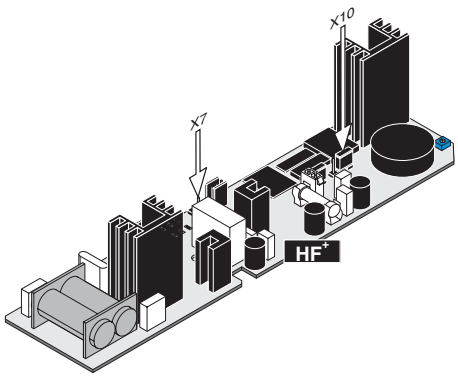

5.1.4 ... HF+ board in the dentist element

- The jumper setting of **X10** on the new **HF+** module must be at C1.
- Check whether the bridge to **X7.2 / X7.3** is present.

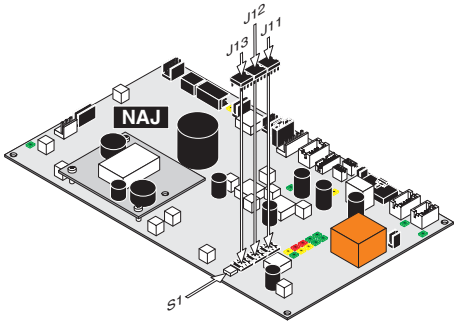

5.1.5 ... NAJ board in the dentist element

- When replacing an **NAJ** board, the dongles (J11, J12, J13) of the defective board must be reconnected to the new board.
- The jumper setting of **S1** on the discarded board must be used.

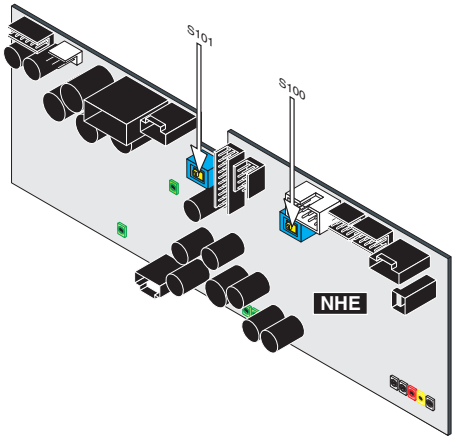

5.1.6 ... NHE board in the assistant element

The switch setting of **S100** (S-CAN) and **S101** (supplementary holder) must be transferred from the discarded **NHE** to the new **NHE**board.

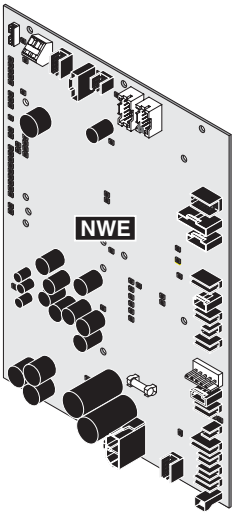

5.1.7 ... NWE board in the water unit

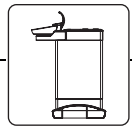

NOTE

When replacing the board, cover the ventilation slits over the power supply unit so that no screws fall into it.

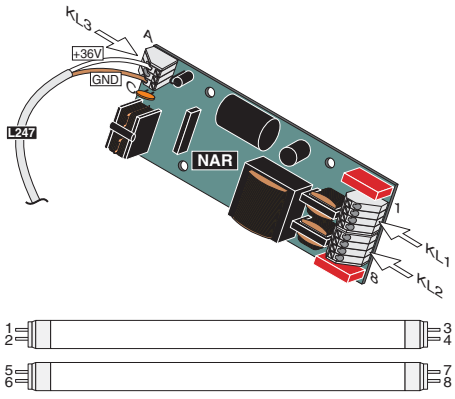

5.1.8 ... NAR board in the RÖBI

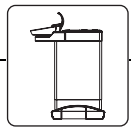

CAUTION

*During the replacement of the **NAR** board, reconnect the lines from the old to the new board directly so that none of the lines are incorrectly connected.*

sirona
The Dental Company

6 PC connection / Networking

TENEO

6.1 Connection of a dental treatment center to the practice network

You'll find further information on connecting the dental treatment center to a practice network in:
"User Manual - DUMC" SN: 6194489
Section: For components in a network
and
configuration with regard to the network address, please see
"Operating Instructions -TENEO" SN: 6193549
Section: Operation and> configuration of the dental treatment center -> Configuring network connections.

6.2 PC control via SIUCOM plus

6.2.1 Control of PC programs via the treatment center

SIUCOM plus enables you to control PC programs via the Sirona treatment center TENEO. The PC functions can be operated via the user interface of the treatment center (touch screen) or the system foot control.

6.2.2 Ethernet connection is required.

This is achieved through communication of the treatment center with the PC via the Ethernet interface and the practice network. The function codes generated by specific operations in the treatment center are assigned to the desired PC functions in the SIUCOM program. Under certain circumstances it is therefore possible to start, terminate and control PC applications.

6.2.3 Third-party programs can also be controlled in this manner.

The SIUCOM plus PC program provides the Sirona SIUCOM plus interface for operating functions inside PC programs of other manufacturers.
The operating functions provided by the manufacturer of the SIUCOM plus-capable PC application can thus be triggered from the treatment center.

For further information, please see "Installation and Configuration - SIUCOM plus" SN: 6084367.

We reserve the right to make any alterations which may be required due to technical improvements.

D 3509.076.01.01.02 07.2008

Language: English
Ä.-Nr.: 000 000

Printed in Germany
Imprimé en Allemagne

Sirona Dental Systems GmbH

Fabrikstrasse 31
64625 Bensheim
Germany
www.sirona.com

Order No. **61 94 448 D 3509**