Go To Table Of Contents

Dental Chair

Midmark *Ultra***Comfort®** & *Ultra***Trim®** Dental Chair

Service and Parts Manual

To purchase a printed copy of this manual, click on the "Place Order" button below.

Place Order

Serial Number Prefixes:
NT, NZ & V

(*Ultra***Comfort** shown)

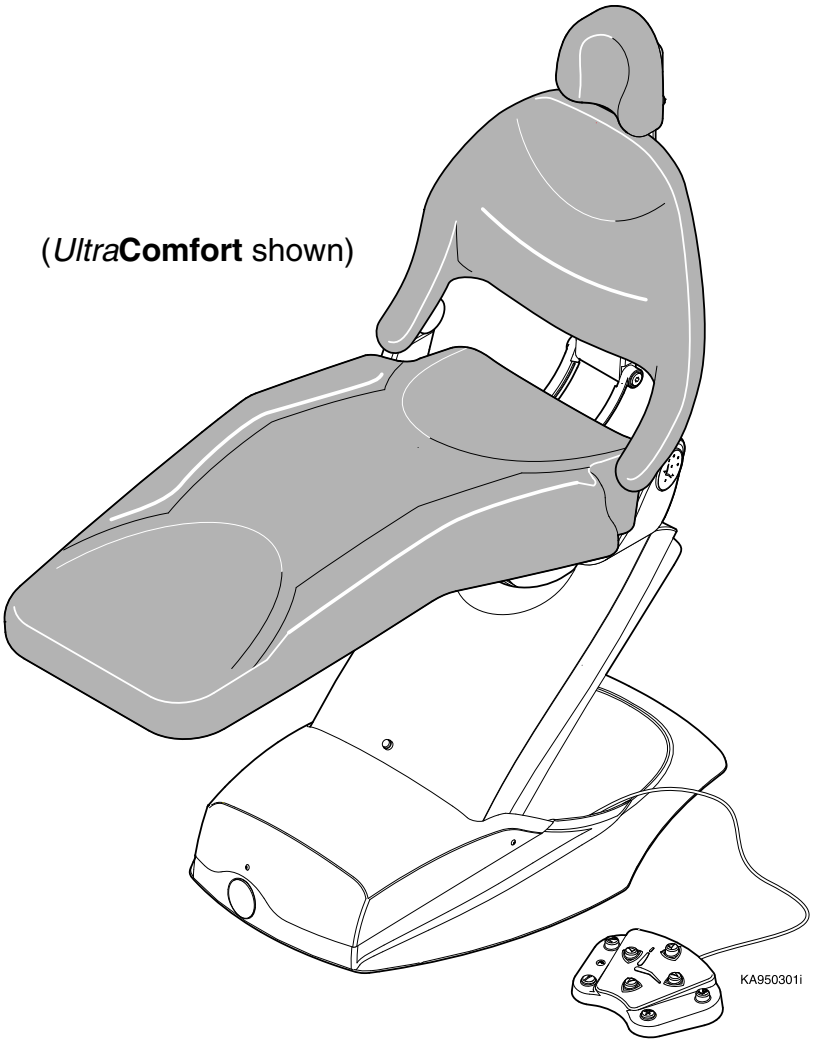

FOR USE BY MIDMARK
TRAINED TECHNICIANS ONLY

SF-1620

Part No. 004-0287-00 (7/14/15)

Style B

Go To Table Of Contents

TABLE OF CONTENTS

Section/Paragraph ..... Page

IMPORTANT INSTRUCTIONS
General Safety Instructions iii
Safety Alert Symbols iii
Warranty Instructions iii

SECTION I GENERAL INFORMATION
1.1 Scope of Manual 1-1
1.2 How to Use Manual 1-1
1.3 Description Of Midmark Dental Chair 1-1
1.4 Standard Torque Specifications 1-7
1.5 Specifications 1-7
1.6 Parts Replacement Ordering 1-9
1.7 Special Tools 1-9

SECTION II TESTING AND TROUBLESHOOTING
2.1 Operational Test 2-1
2.2 Testing Positioning Potentiometer 2-4
2.3 Troubleshooting Procedures 2-6

SECTION III SCHEDULED MAINTENANCE
3.1 Scheduled Maintenance 3-1

SECTION IV MAINTENANCE/SERVICE INSTRUCTIONS
4.1 Introduction 4-1
4.2 Upholstery
Removal 4-1
Installation 4-1
4.3 Covers
Removal 4-2
Installation 4-2
4.4 Headrest
Adjustment 4-3
4.5 Rotational Brake
Removal 4-4
Installation 4-4
4.6 Membrane Touchpad
Removal 4-5
Installation 4-5
4.7 Hydraulic Back Cylinder
Removal 4-5
Installation 4-6
4.8 Hydraulic Base Cylinder
Removal 4-7
Installation 4-9
4.9 Hydraulic Pump
Removal 4-10
Installation 4-12
4.10 Capacitor, Motor Pump
Removal 4-12
Installation 4-13

Section/Paragraph ..... Page

4.11 Hydraulic Reservoir
Removal 4-13
Installation 4-14
4.12 Hydraulic Fluid Level
Checking / Adding 4-14
4.13 Hydraulic Solenoid Valve Assembly
Removal 4-15
Installation 4-18
Adjustments 4-18
4.14 Printed Circuit (P.C.) Board
Removal 4-19
Installation 4-19
4.15 Fuses (P.C. Board)
Replacement 4-19
4.16 Base Potentiometer
Removal 4-20
Installation 4-21
Adjustment 4-21
4.17 Back Potentiometer ***(SN NT1000 - NT1598)*** ***(SN NZ1000 - NZ1019)***
Removal 4-22
Installation 4-23
Adjustment 4-24
4.18 Back Potentiometer ***(SN NT1599 to Present)*** ***(SN NZ1019 to Present)***
Removal 4-25
Installation / Adjustment 4-26
4.19 Safety Bail Limit Switch
Removal 4-26
Installation 4-26
4.20 Hydroglide Assembly
Removal 4-27
Installation 4-28
4.21 Foot Switch Control
Removal 4-28
Installation 4-28
4.22 Using Manual Override Function
Operation 4-30

SECTION V SCHEMATICS / DIAGRAMS
5.1 Electrical / Hydraulic Diagrams
P.C. Board / Related Circuitry (115 VAC) . 5-1
P.C. Board / Related Circuitry (230 VAC) .. 5-4
SW1 Switch Settings 5-7
J1 thru J5 Pendants 5-8
J-Box Wiring Diagram 5-9
Console / Accessory Wiring Diagram 5-10
Base Up Hydraulic Function 5-11
Base Down Hydraulic Function 5-12
Back Up Hydraulic Function 5-13
Back Down Hydraulic Function 5-14

(*) Indicates that there has been a serial number break for the illustration and that there are additional point page(s) following the original page.

TABLE OF CONTENTS

SECTION VI PARTS LIST
6.1 Introduction 6-1
6.2 Description Of Columns 6-1
6.3 Torque Specifications And Important Assembly Notes 6-1
Pictorial Index (*Ultra***Comfort ®**) 6-2
Pictorial Index (*Ultra***Trim**) 6-3
Silhouette Upholstery (*Ultra***Comfort ®**) 6-4
Ultraleather Upholstery (*Ultra***Comfort ®**) 6-5
Silhouette Upholstery (*Ultra***Trim**)..... 6-6
Ultraleather Upholstery (*Ultra***Trim**) 6-7
Double Articulating Headrest 6-8*
Magnetic Headrest 6-9
Covers 6-10*
Base Components 6-11
Seat Components 6-12*
Brake Components 6-13
Back Components (*Ultra***Comfort ®**) 6-14
Back Components (*Ultra***Trim**) 6-15
Hydraulic Components.....6-16*
Hoses and Fittings 6-17
Electrical Components 6-18*
Foot Control 6-19
L/R and Console Components.....6-20*
Remote Mounted Chair Control 6-21*

COMMENTS 7-1
FAX ORDER FORM..... 7-2

(*) Indicates that there has been a serial number break for the illustration and that there are additional point page(s) following the original page.

General Safety Instructions

Safety First: The primary concern of Midmark Corporation is that this chair is maintained with the safety of the patient and staff in mind. To assure that services and repairs are completed safely and correctly, proceed as follows:

(1) Read this entire manual before performing any services or repairs on this chair.

(2) Be sure you understand instructions contained in this manual before attempting to service or repair chair.

Safety Alert Symbols

Throughout this manual are safety alert symbols that call attention to particular procedures. These items are used as follows:

DANGER
A DANGER is used for an imminently hazardous operating procedure, practice, or condition which, if not correctly followed, will result in loss of life or serious personal injury.

WARNING
A WARNING is used for a potentially hazardous operating procedure, practice, or condition which, if not correctly followed, could result in loss of life or serious personal injury.

CAUTION
A CAUTION is used for a potentially hazardous operating procedure, practice, or condition which, if not correctly followed, could result in minor or moderate injury. It may also be used to alert against unsafe practices.

EQUIPMENT ALERT
An EQUIPMENT ALERT is used for an imminently or potentially hazardous operating procedure, practice, or condition which, if not correctly followed, will or could result in serious, moderate, or minor damage to unit.

NOTE
A NOTE is used to amplify an operating procedure, practice or condition.

Warranty Instructions

Refer to Midmark “Limited Warranty” printed in the Installation and Operation Manual for warranty information. Failure to follow guidelines listed below will void the warranty and/or render the Dental Chair unsafe for operation.

- In event of a malfunction, **do not** attempt to use dental chair until necessary repairs have been made.
- **Do not** attempt to disassemble chair, replace malfunctioning or damaged components, or perform adjustments unless you are one of Midmark’s authorized service technicians.
- **Do not** substitute parts of another manufacturer when replacing inoperative or damaged components. Use only Midmark replacement parts.

Printed in U.S.A.

Go To Table Of Contents

SECTION I
GENERAL INFORMATION

1.1 Scope of Manual

This manual contains detailed troubleshooting, scheduled maintenance, maintenance, and service instructions for the Midmark Dental Chair. This manual is intended to be used by Midmark's authorized service technicians.

1.2 How to Use Manual

A. Manual Use When Performing Scheduled Maintenance.

(1) Perform inspections and services listed in Scheduled Maintenance Chart (Refer to para 3.1).

(2) If a component is discovered to be faulty or out of adjustment, replace or adjust component in accordance with maintenance / service instructions (Refer to para 4.1).

B. Manual Use When Unit Is Malfunctioning And Cause Is Unknown.

(1) Perform an operational test on chair (Refer to para 2.1).

(2) Perform troubleshooting procedures listed in Troubleshooting Guide (Refer to para 2.2).

(3) If a component is discovered to be faulty or out of adjustment, replace or adjust component in accordance with maintenance / service instructions (Refer to para 4.1).

C. Manual Use When Damaged Component Is Known.

(1) Replace or adjust component in accordance with maintenance / service instructions (Refer to para 4.1).

1.3 Description Of Midmark Dental Chair

A. General Description (See Figure 1-1).

The Midmark Chair is a dental operating chair designed for the general dentistry market. The chair is hydraulically positioned using a hydraulic pump, back, base cylinders and solenoid valve unit that are activated by depressing either the desired membrane or foot switch.

B. Major Serviceable Components (See Figure 1-1).

Hydraulic Motor Pump (1, Figure 1-1)

Motor Pump provides hydraulic pressure to system and works with the solenoid valves, check valves, and throttle valves to operate Back and Base cylinders.
A capacitor, mounted near the reservoir, provides start and run power.
Motor is for *intermittent* operation. Continuous operation will cause motor to overheat, causing internal thermal overload to open, removing power from motor. Normal cool off period for thermal overload to reset is approximately 10 minutes.

Solenoid Valve Unit (2, Figure 1-1)

Solenoid Valve Unit consist of Back Up, Back Down, Base Up, and Base Down Solenoid valves.
Four manually set Throttle Valves (TV1, TV2, TV3, and TV4) control flow of hydraulic fluid during various functions.
Two Check Valves (CV1 and CV2) prevent fluid from back flowing through Base Up and Back Up Solenoid Valves.
A Pressure Relief Valve protects the system should higher then normal pressure occur during operation.

Back Hydraulic Cylinder (3, Figure 1-1)

Back Hydraulic Cylinder is a single-acting cylinder. During Back Up operation the Motor Pump is operating to create hydraulic pressure required to raise the cylinder. During Back Down function Motor is not running and the cylinder operates by pressure created by equipment and patient weight to lower Back section.

Base Hydraulic Cylinder (4, Figure 1-1)

Base Hydraulic Cylinder is a single-acting cylinder. During Base Up operation the Motor Pump is operating to create hydraulic pressure required to raise the cylinder. During Base Down function Motor is not running and cylinder operates by pressure due to equipment and patient weight to lower Base section.

Printed in U.S.A.

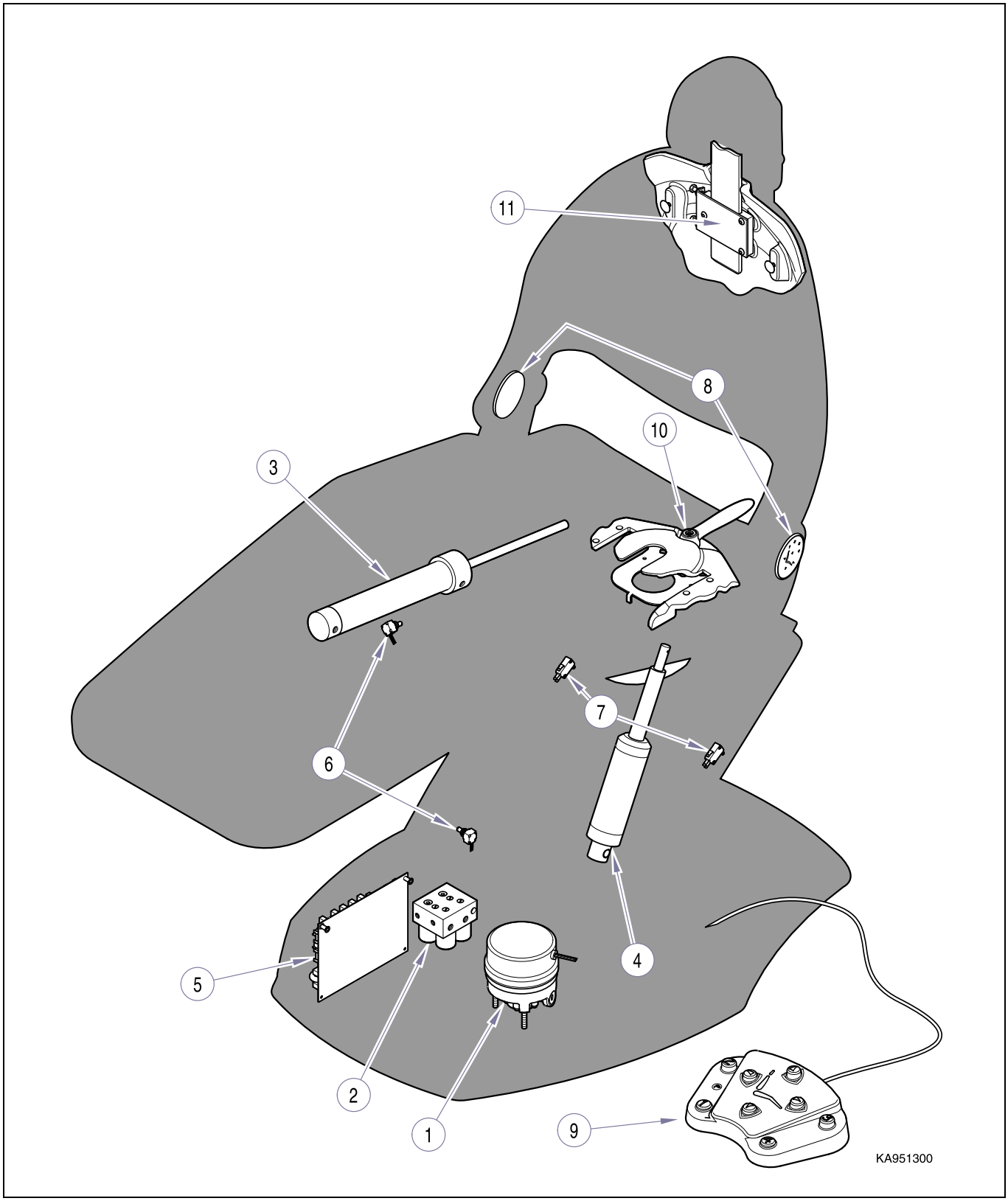

Figure 1-1. Component Location

P.C. Board w/ Fuses (5, Figure 1-1)

Printed Circuit Board contains 115 VAC or 230 VAC line voltage, 12 VDC, and 5 VDC plug connectors, 12 VDC supply transformer for control circuitry, Pump, Base and Back control relays, two 6.5 amp (115 VAC) or 3.15 amp (230 VAC) line input fuses, one 100 mA fuse for 115 VAC Input to P.C. Board Transformer,
RV1 Surge Protector for over-voltage spikes, Program switch (SW1), Calibration Button (SW2), and main Microprocessor (U6).

Back and Base Positioning Potentiometers (6, Figure 1-1)

Positioning Potentiometers provide P.C. board with information, thru voltage change, on the positions of Base and Back sections during operation.
P.C. board, during calibration mode, uses the potentiometers to determine where end of travel points are for Base and Back. It stores this information and, while monitoring voltage output of potentiometers, prevents chair from reaching extreme ends of travel.
Output voltage from potentiometers allows P.C. board, thru use of program and positioning buttons, to store desired chair positions in P.C. board memory.
After a position has been programmed, depressing that programmed button (1 thru 4) will automatically move the chair to the position.

Safety Bail Limit Switches (7, Figure 1-1)

Two Safety Bail Limit Switches are normally closed (N.C.) switches located on *patient's* right and left side parallel arms.
During chair's descent, if bottom lift arm cover contacts an obstruction, cover will depress switch actuator(s) of Safety Bail Limit Switch(es). The normally closed contacts open, removing power from Base Down and Back Down solenoid coils at plug connectors J17 (4 & 5) and J18 (4 & 5) on PC board. Base Up and Back Up will continue to work.
When the obstruction is removed, the switch(es) return to the N.C. position. To continue a function, depressing that function button allows chair to continue its operation.

Membrane Touch Pads (8, Figure 1-1)

Membrane touch pads are located on both sides of the chair or on consoles of the delivery systems. Operate the chair by depressing one of four directional arrow buttons that corresponds to back or seat graphic.
Depressing one of the four program buttons (1 thru 4) allows for chair movement to a predetermined setting.
The functions can be stopped by momentarily depressing any switch on the touch pads or foot control.
A hidden switch, located in the center of the directional arrows on the pad, is for setting programmed positions.

Foot Switch (9, Figure 1-1)

Foot Switch consist of four directional arrow buttons, four numbered program position buttons and a button, designated by the letter "P", for programming.
Depressing one of the four directional arrow buttons that corresponds to the back or seat graphic moves chair in that direction.
Depressing one of the four program buttons (1 thru 4) allows for chair movement to a predetermined setting.
Functions can be stopped by momentarily depressing any switch on the touch pads or foot control.
The button, with the letter "P", is for setting programmed positions.

Rotational Seat Lock (10, Figure 1-1)

The chair seat will rotate 30° each way from center-line for a stand-alone and console chair. For a L / R chair it will rotate 15°. To release the rotational lock, rotate the handle toward the patient's right side.
To engage the rotational lock, rotate the handle toward the patient's left side.

Headrest Locking Assembly (11, Figure 1-1)

Headrest height can be changed by pulling out or pushing in on headrest. Tension of headrest locking assembly is pre-set at factory but can be adjusted if required.

C. Theory of Operation (Refer to Figure 1-4 and Section V for wiring diagram, electrical schematics and hydraulic layouts).

Electrical Power:

Line voltage is supplied to chair's Main PC Board thru power cord.
F1, F2, and F3 replaceable fuses, protect P.C. Board from excessive current draw.
RV1 Surge Suppressor, protects P.C. board from voltage spikes by partially blocking electrical flow until supply voltage returns to a normal value.
A transformer along with voltage regulators on PC circuit board reduces line voltage to 12 and 5 VDC. This provides power to operate the circuitry on PC circuit board, limit switches, membrane switch panel, and foot control.
Relays K1 thru K5 on P.C. board are for line voltage operation of Solenoid Valves and Motor Pump.
LED's, next to the specific relay, lights when that relay is operated.

Operation of Membrane Switch Panels (Figure 1-2):

PC circuit board supplies 5 VDC to one side of each normally open (N.O.) switches in membrane switch panel. Pressing a membrane switch, closes contacts, completing a circuit, allowing a signal to return to PC circuit board, activating the function selected. Functions available are Back Up and Down, Base Up and Down, Programmed settings, 1 thru 4, and a Programming button "P".

Program Function (Figure 1-2):

Using the Directional buttons, place chair in a desired position. Press Program (P) button, unmarked button in middle of Directional buttons. There is a short audible beep after which you have three (3) seconds to depress the desired Program Position button (1,2, 3, or 4). When the Position button is depressed, three audible beeps are sounded indicating the position has been stored. Pressing the Position button will bring the chair to the position that was programmed.

Manual Override Function (Figure 1-2):

Pressing and holding the Program (P) button while pressing a Directional button by-passes the feedback coming from the back and base potentiometers. This allows for operation of the chair should a potentiometer malfunction. This should only be used should a patient be on the chair to allow for safe exit. Service should be called to repair malfunction.

Operation of Foot Control (Figure 1-3):

PC circuit board supplies 5 VDC to one side of each of

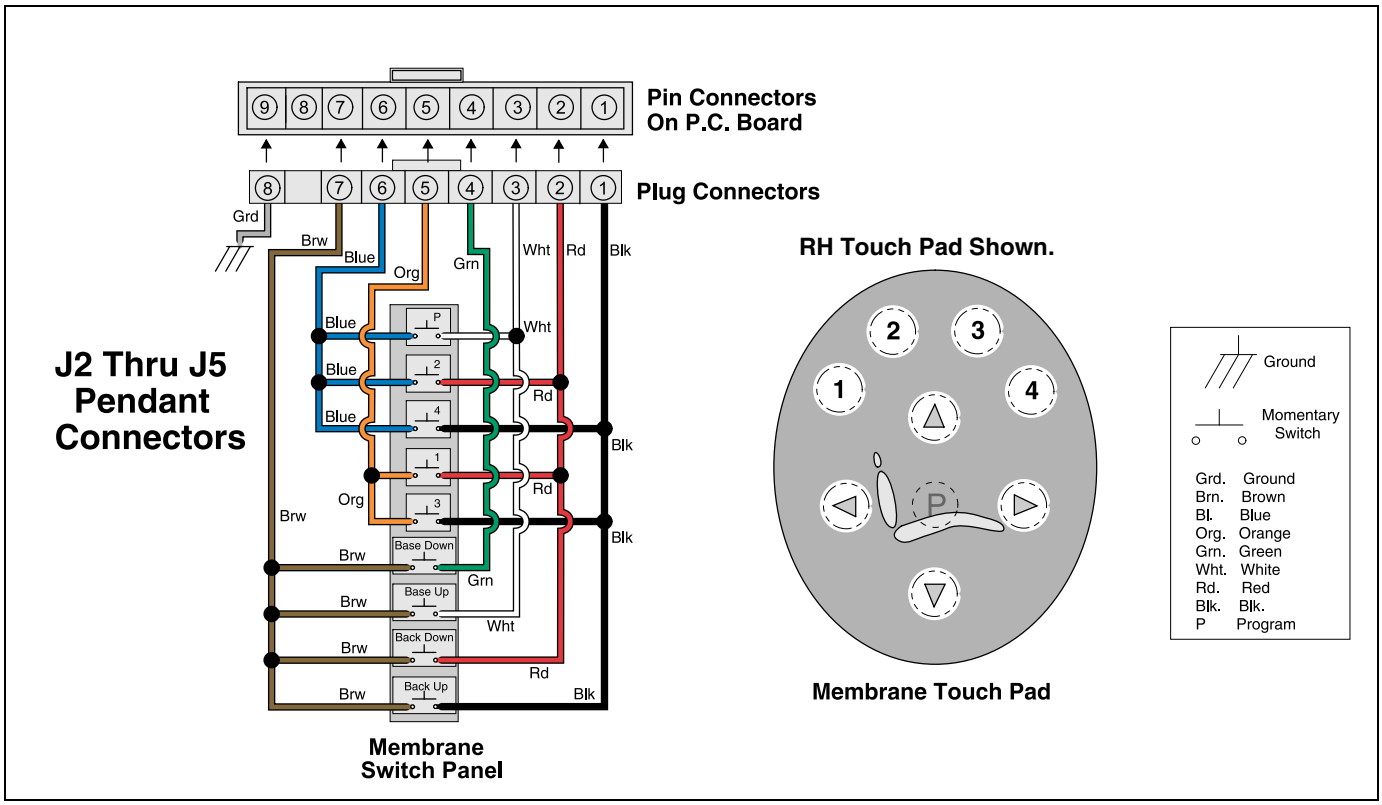

Figure 1-2. Membrane Touch Pads.

the normally open (N.O.) switches in foot switch. Pressing one of the switches, closes the contacts, completing a circuit, allowing a signal to return to PC circuit board, activating the function selected.
Functions available are Back Up and Down, Base Up and Down, Programmed settings 1 thru 4, and a Programming button "P". Should a malfunction occur the Manual Override function can be used.

Program Function (Figure 1-3):

Using the Directional buttons, place chair in a desired position. Press Program (P) button. There is a short audible beep after which you have three (3) seconds to depress the desired Program Position button (1,2, 3, or 4). When a Position button is depressed, three audible beeps are sounded indicating the position has been stored.
Pressing the Position button will bring the chair to the position that was programmed.

Manual Override Function (Figure 1-3):

Pressing and holding the Program (P) button while pressing a Directional button by-passes the feedback coming from the back and base potentiometers. This allows for operation of the chair should a potentiometer malfunction. This should only be used should a patient be on the chair to allow for safe exit. Service should be called to repair malfunction.

Back Up Function Operation (Figure 1-4):

Depressing and holding one of the Back Up directional button completes a circuit to the PC board.
On the PC board, K4 contacts close supplying line voltage to connector J18, pins 2 and 3, to the Back Up solenoid coil, energizing the coil, opening the hydraulic valve.
At the same time, K1 contacts close supplying line voltage to connector J16, pins 2 and 3, to the hydraulic motor pump, energizing the pump.
During the Back Up function, the Back Potentiometer, connected to J9 connector, signals movement of the Back section.
During normal operation, when the potentiometer reaches the calibrated position, just before the extreme end of travel, the signal it sends back to the PC board tells the board to open K1 and K4 contacts removing power from the Back Up solenoid valve and hydraulic pump motor.

Back Down Function Operation (Figure 1-4):

Depressing and holding one of the Back Down directional button completes a circuit to the PC board.
On the PC board, K5 contacts close supplying line voltage to connector J18, pins 4 and 5, to the Back Up solenoid coil, energizing the coil, opening the hydraulic valve.

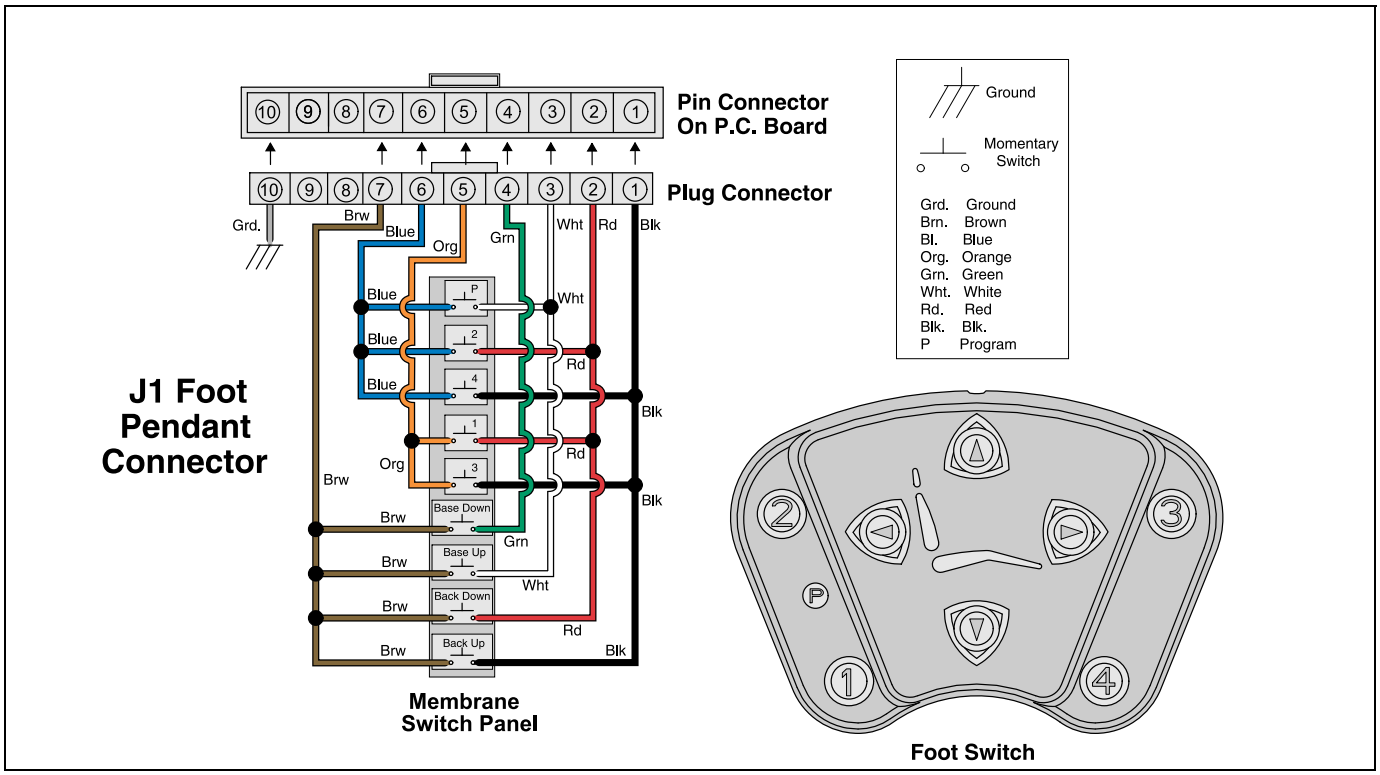

Figure 1-3. Foot Control

During the Back Down function, the Back Potentiometer, connected to J9 connector, signals movement of the Back section. During normal operation, when the potentiometer reaches the calibrated position, just before the extreme end of travel, the signal it sends back to the PC board tells the board to open K5 contacts and remove power to the Back Down solenoid valve.

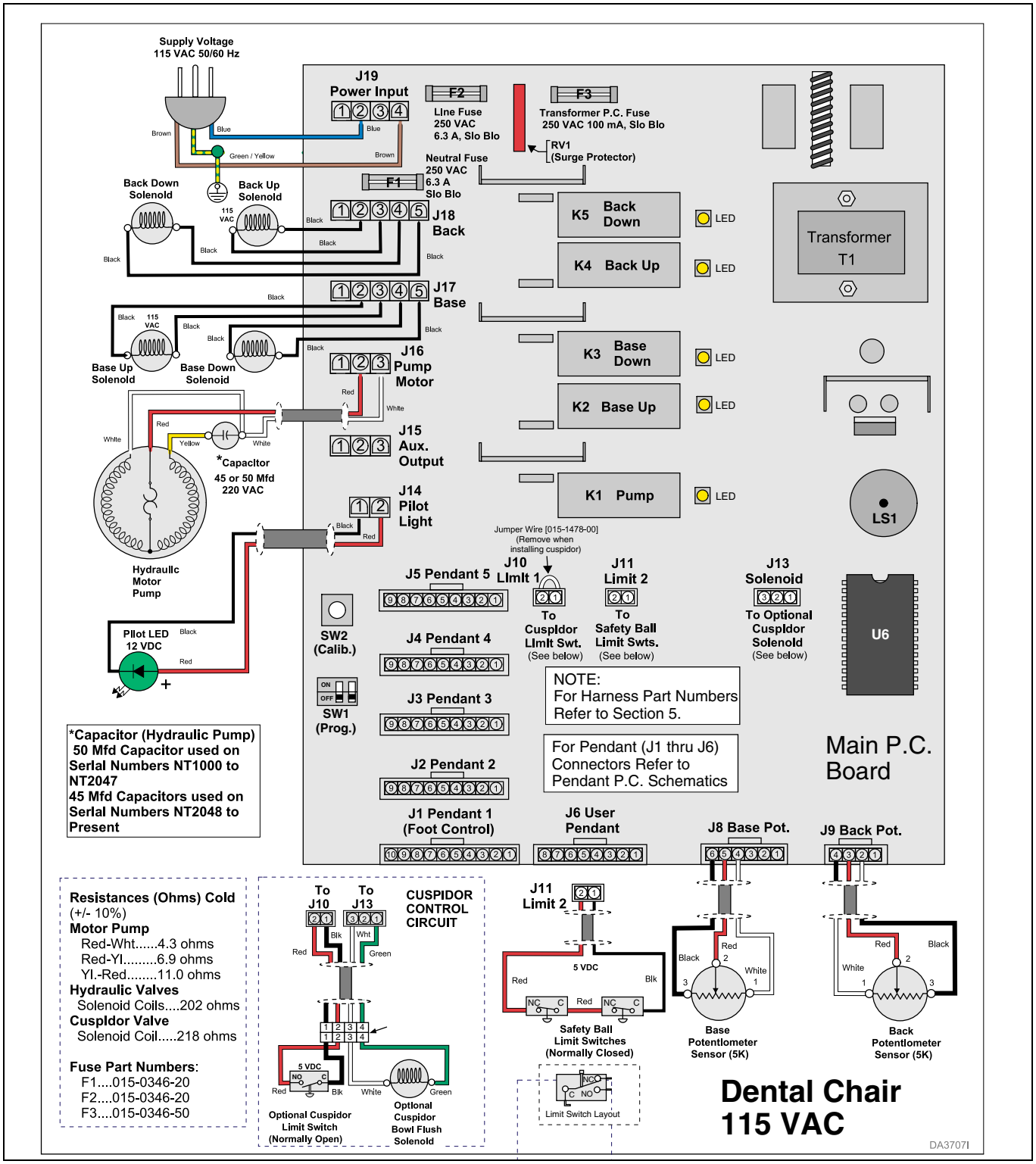

Figure 1-4. Main P.C. Board and Related Components

Base Up Function Operation (Figure 1-4):

Depressing and holding one of the Base Up directional button completes a circuit to the PC board.
On the PC board, K2 contacts close supplying line voltage to connector J17, pins 2 and 3, to the Base Up solenoid coil, energizing the coil, opening the hydraulic valve.
At the same time, K1 contacts close supplying line voltage to connector J16, pins 2 and 3, to the hydraulic motor pump, energizing the pump.
During the Base Up function, the Base Potentiometer, connected to J8 connector, signals movement of the Base section. During normal operation, when the potentiometer reaches the calibrated position, just before the extreme end of travel, the signal it sends back to the PC board tells the board to open K1 and K2 removing power to Base Up solenoid valve and hydraulic pump motor.

Base Down Function Operation (Figure 1-4):

Depressing and holding one of the Base Down directional button completes a circuit to the PC board.
On the PC board, K3 contacts close supplying line voltage to connector J17, pins 4 and 5, to the Base Down solenoid coil, energizing the coil, opening the valve.
During the Base Down function, the Base Potentiometer, connected to J8 connector, signals movement of the Base section. During normal operation, when the potentiometer reaches the calibrated position, just before the extreme end of travel, the signal it sends back to the PC board tells the board to open K3 contacts and remove power to the Base Down solenoid valve.

Safety Bail Limit Switches (Figure 1-4):

During Base or Back Down operations, as chair is descending, should bottom lift arm cover contact an obstruction, one or both normally closed (N.C.) Safety Bail Limit Switches, located beneath cover, will open. Power is removed from Base and Back solenoid valves, closing the valves, stopping descent of both base and back. Base Up and Back Up functions will continue to work.
Removing the obstacle, returns switch contacts to closed position.
Press the desired directional or program button to resume operation.

1.4 Standard Torque Specifications

The following standard torque specifications in Table 1-1 apply to the hardware used on the unit unless otherwise listed elsewhere in the service procedures or parts illustrations.

Table 1-1. Torque Specifications

Hardware Size*	Torque Values
#6	11 to 21 inch-lbs. (1.2 to 2.3 N•M)
#8	20 to 30 inch-lbs. (2.2 to 3.3 N•M)
#10	32 to 42 inch-lbs. (3.6 to 4.8 N•M)
1/4 inch	75 to 85 inch-lbs. (8.5 to 9.6 N•M)
5/16 inch	18 to 22 ft.-lbs. (24.4 to 29.8 N•M)
3/8 inch	31 to 35 ft.-lbs. (42.0 to 47.5 N•M)
1/2 inch	50 to 60 ft.-lbs. (67.8 to 81.4 N•M)

*** All hardware should be grade 5 or above.**

1.5 Specifications

Factual data for the Midmark Dental Chair is provided in Table 1-2. Also, see Figure 1-5.

Table 1-2. Specifications

Description	Data
Maximum Patient Weight	300 lbs (136 kg)
Weight of a Unit:	
Without Shipping Carton	
Chair Only	290 lbs (132 kg)
Chair (L / R or Console)	310 lbs (141 kg)
With Shipping Carton	
Chair Only	350 lbs (159 kg)
Chair (L / R or Console)l	370 lbs (168 kg)
Hydraulic Fluid Requirements	
System Capacity	1 Quart (950 ml)
Type of Hydraulic Fluid	ISO VG 32
Electrical Requirements:	115 VAC +/-10%, 5A, 60 HZ, single phase or 230 VAC +/-10%, 2.5A, 50/60 HZ, single phase
Fuse Rating*:	
F1 Line Fuse, **115 VAC**	T6.3 AL, 250 VAC 5 x 20mm, Type Slo-Blo or

SECTION I
GENERAL INFORMATION

F1 Line Fuse, **230 VAC**.....T3.15 AL, 250 VAC
5 x 20mm, Type Slo-Blo
F2 Line Fuse, **115 VAC** .....T6.3 AL, 250 VAC
5 x 20mm, Type Slo- Blo
or
F2 Line Fuse, **230 VAC**.....T3.15 AL, 250 VAC
5 x 20mm, Type Slo-Blo
F3 Transformer Fuse
115 VAC / 230 VAC ...T0.10 AL / T0.05 AL, 250 VAC
5 x 20mm, Type Slo-Blo

(*Fuses are located on P.C. Board.)

Duty Cycle..... Intermittent Operation
(30 seconds on / 5 minutes off,
motor run time)

WARNING
Should it be necessary to transport the chair, its position is critical to ensure safety. Before attempting to move / transport chair, it must be lowered to its minimum height and locked in place at 0° rotation (install shipping bolt - refer to step 7 on page A-1 of the Installation Guide, Module A). ***NOTE: Midmark strongly recommends disassembling any accessory arms (unit, light, etc.) from chair before attempting to move / transport an entire operatory.***

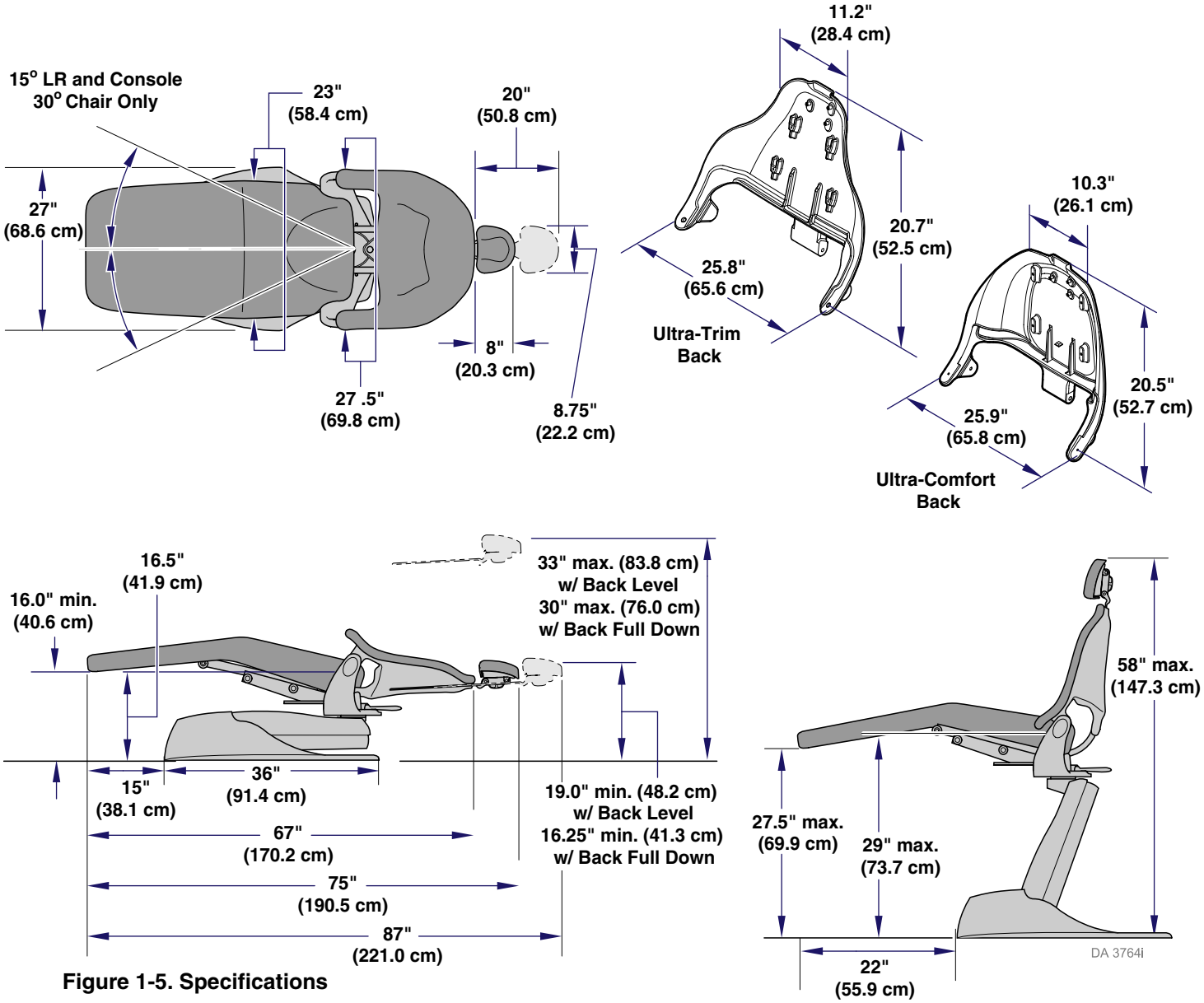

Figure 1-5. Specifications

1.6 Parts Replacement Ordering

If replacement part(s) are required, order part(s) directly from factory as follows:

(1) Refer to Figure 1-6 to determine location of model number and serial number of chair and record this data.
Refer to Parts List to determine item numbers of parts, part numbers, descriptions, and quantities needed and record this data (Refer to para 6.1).

NOTE
To assure expedient service and correct parts you must have correct *Model and Serial Number* of chair.

(2) Determine installation date of chair and record this data. Call Midmark (1-800 643-6275) and ask for Technical Service Department. Please have ***Model and Serial Number*** of chair.

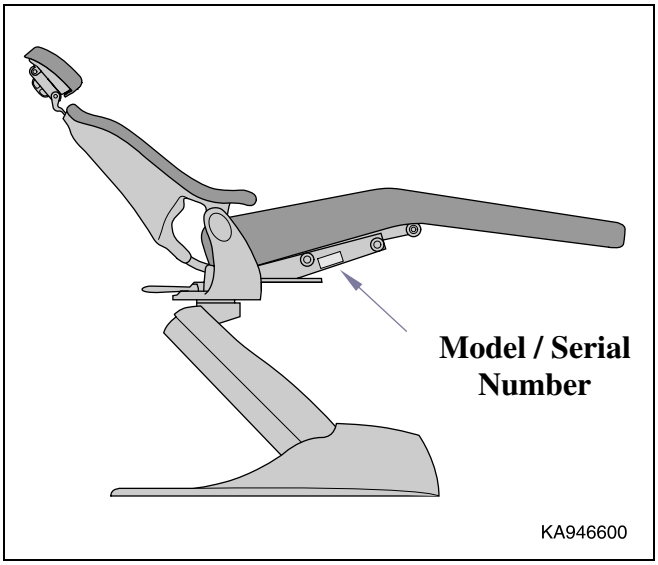

Figure 1-6. Model Number / Serial Number Location

Table 1-3. Special Tool List

Description of Special Tool	Manufacturer's Name / Address / Phone	Manufacturer's Part Number	Purpose of Special Tool
Multimeter *	Commercially Available	Any Type	Used to perform continuity and voltage checks.
Scissor Jack (capable of lifting a minimum of 1000 lbs. [454 kg])	Commercially Available	Any Type	Used to elevate Back section when hydraulic Base cylinder or motor pump is malfunctioning.
Jack Stands (Qty. 2) (capable of supporting 1000 lbs. [454 kg])	Commercially Available	Any Type	Used to support chair top when hydraulic base cylinder or motor pump is being worked on.
Jumper wire with insulated clips	Made up by technician	N/A	For jumpering various test points during troubleshooting.
Torque Wrench *	Commercially Available	Any Type	Used to tighten nuts or screws to specified values.
** Tool should be calibrated annually to ensure proper specifications are met.*			

SECTION II
TESTING AND TROUBLESHOOTING

2.1 Operational Test

In order to effectively diagnose a malfunction of chair, it may be necessary to perform an operational test as follows:

WARNING
Refer to the Operator's Manual for complete instructions on operating the chair. Failure to do so could result in personal injury.

NOTE
The Operational Test, for the most part, only describes what ***should*** happen when chair is operated. If the chair does something other than described, a problem has been discovered. Refer to Troubleshooting Guide to determine cause of problem and its correction.

WARNING
When performing various checks with chair plugged in and covers off use extreme care to prevent accidental electrical shock. Failure to comply could cause severe injury.

(1) Plug chair power cord into a grounded, non-isolated, correctly polarized outlet, that has proper voltage for chair.

(2) Depress Back Up, Back Down, Base Up, and Base Down buttons on membrane switch panel (Refer to Figure 2-1).

Observe. Chair should move in direction corresponding to button being depressed. Hydraulic motor pump and cylinders should run quietly. Movement should be smooth and match speed and range of motions listed below:

Chair Speeds (±1 second w/ 180 lbs [82 kg] load on chair)
Back Up to Back Down.....15 seconds
Back Down to Back Up.....15 seconds
Base Up to Base Down .....15 seconds
Base Down to Base Up .....15 seconds
See Figure 1-5 for max. and min. heights.

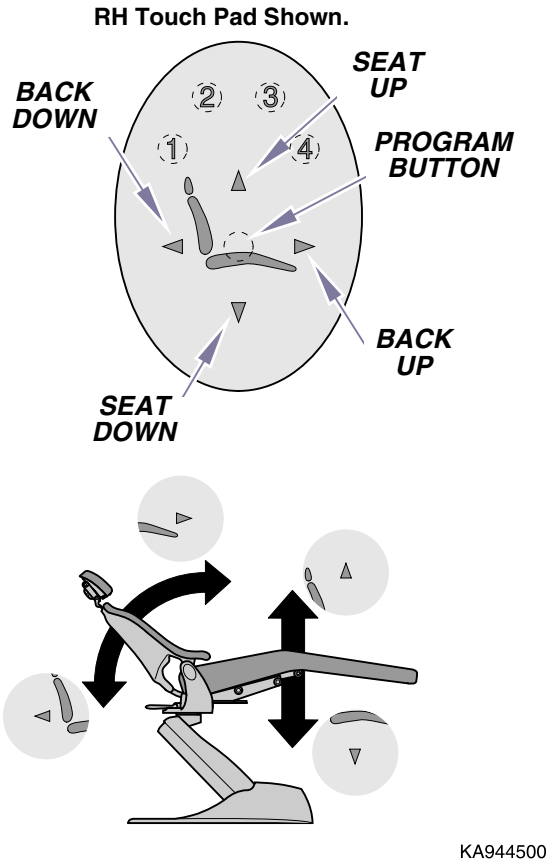

Figure 2-1. Operational Test

(3) Place a 300 lbs (136 kgs) weight on center of seat section of chair.

Observe. Seat section should not drift downward under weight.

(4) Depress Base Up and Base Down buttons on membrane switch panel.

Observe. Chair base should lift weight steadily and without excessive noise.

(5) Remove weights from chair. Then, place a 100 lbs (45.4 kgs) weight on center of back section of chair (with back section at approximately 45º above horizontal).

(6) Depress Back Up and Back Down buttons on membrane switch panel.

Observe. Back should lift weight steadily and without excessive noise.

(7) Remove weights from chair.

(8) Run Back Up function all the way up and Base Down function all the way down.

(9) Slide headrest in and out stopping at different positions. Push gently against headrest at each position (Refer to Figure 2-2).

Observe. Headrest should not require excessive force to position. When in a position, headrest should not move when a slight pressure is applied.

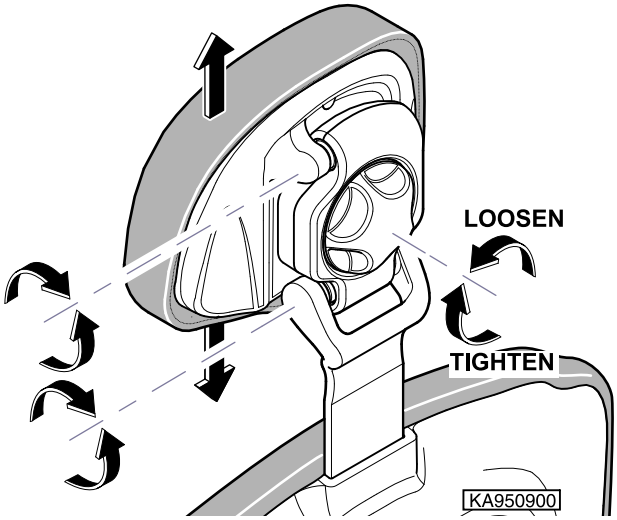

Figure 2-2. Headrest

(10) If chair has Articulating Headrest, loosen knob, move headrest to different positions.

Observe. Headrest should move smoothly without requiring excessive force.

(11) Tighten knob.

Observe. Headrest should remain in position when force is applied.

(12) Loosen Rotation Lock lever and rotate chair top until it hits a stop. Then rotate chair top in opposite direction until it hits a stop. (Refer to Fig. 2-3).

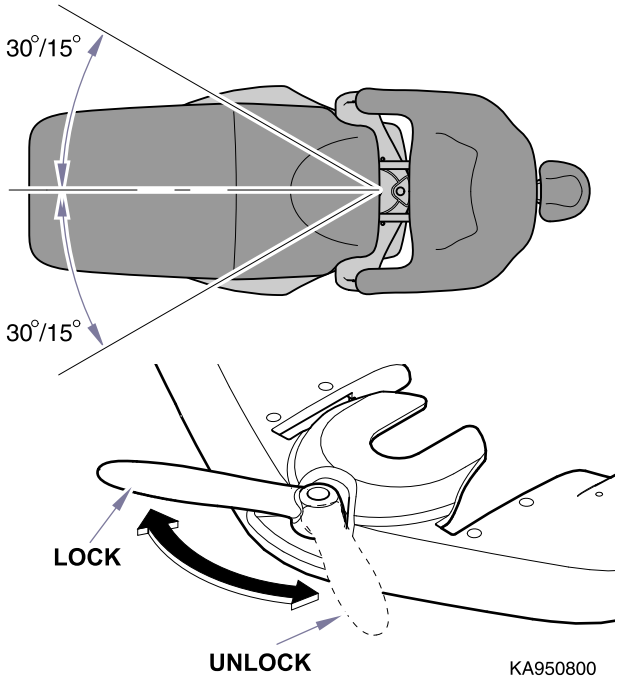

Figure 2-3. Rotational Lock

Observe. Chair top should rotate smoothly and easily; not requiring excessive force. The chair top should be able to be rotated from stop to stop which is 60° or 30° in each direction from centerline of chair. L / R and console chairs will rotate 30° and 15°.

(13) Tighten Rotation Lock lever to locked position. Attempt to rotate chair top.

Observe. Chair top should not be able to be rotated when Rotation Lock lever is engaged.

(14) Depress Back Up, Back Down, Base Up, Base Down buttons on foot control (Refer to Figure 2-4).

Observe. When each of the buttons on foot control are depressed, appropriate function should activate.

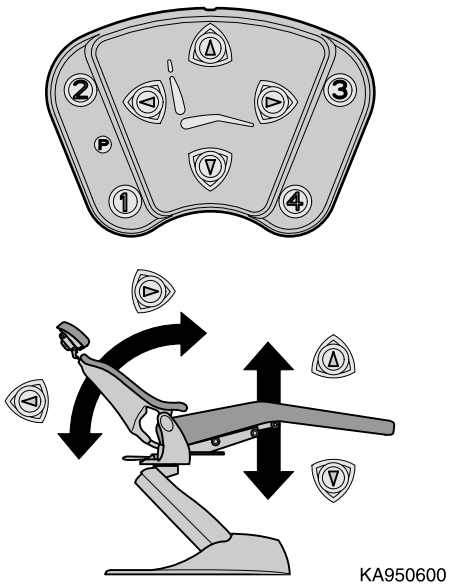

Figure 2-4. Foot Control

(15) Depress Base Down membrane or foot switch. As chair descends, push upward on bottom lift arm cover until one or both of the Safety Bail Limit switches operate (Refer to Figure 2-5).

Observe. When bottom lift arm cover contacts and operates Safety Bail Limit switch(es) chair should immediately stop its descent.

Releasing bottom lift arm cover, returns Safety Bail Limit switch(es) to normally closed position. Operating Base Down membrane or foot switch will cause chair to descend again.

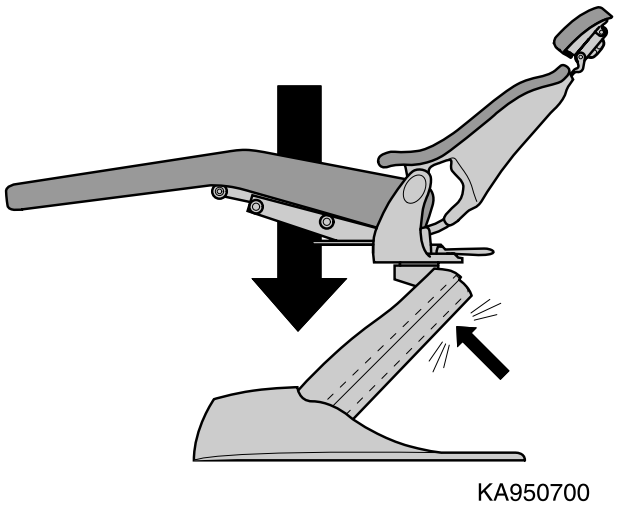

Figure 2-5. Safety Bail Limit Switches.

(16) Check Manual Override using touchpad membrane switch or foot control. Depress and hold Program (P) button and then depress desired Manual positioning button(s) (Refer to Figure 2-6).

NOTE
The Program button on Membrane Touchpads is located directly above Seat graphic. On Foot Control it is located on left side and designated with the letter "P".

Observe. Chair should move to desired position as long as buttons are being depressed.

CAUTION
This procedure should be used by the operator only in case of a chair malfunction should a patient be on chair. This permits positioning the chair to allow a patient to safely exit chair.

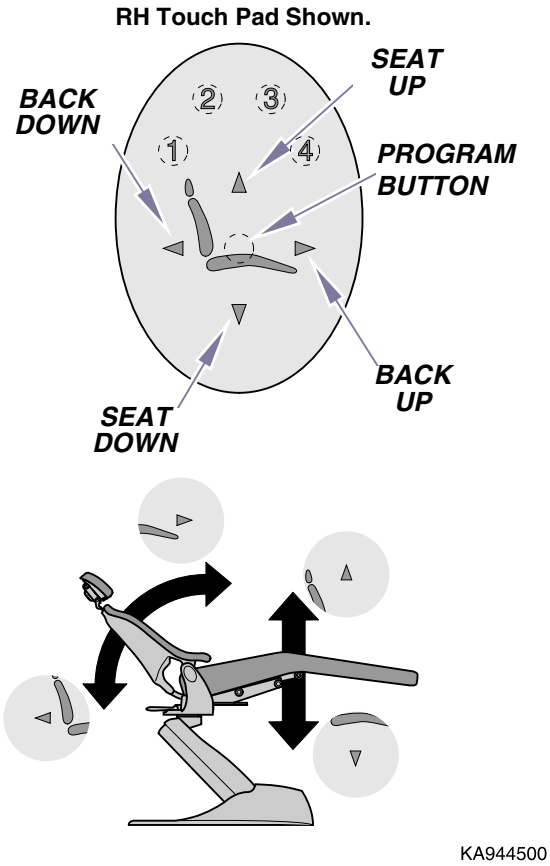

Figure 2-6. Manual Override

(17) Check Programmed Positions using touchpads or foot control. Depress one of the Programmed recall buttons. The chair should advance to the position programmed by the user (Refer to Figure 2-7).

NOTE
Do not attempt to change a programmed position unless requested by personnel at the Dental office.

(18) Press a Programmed Position again, while chair is moving to position, press any button on touchpad or foot control. Chair should stop all movement.

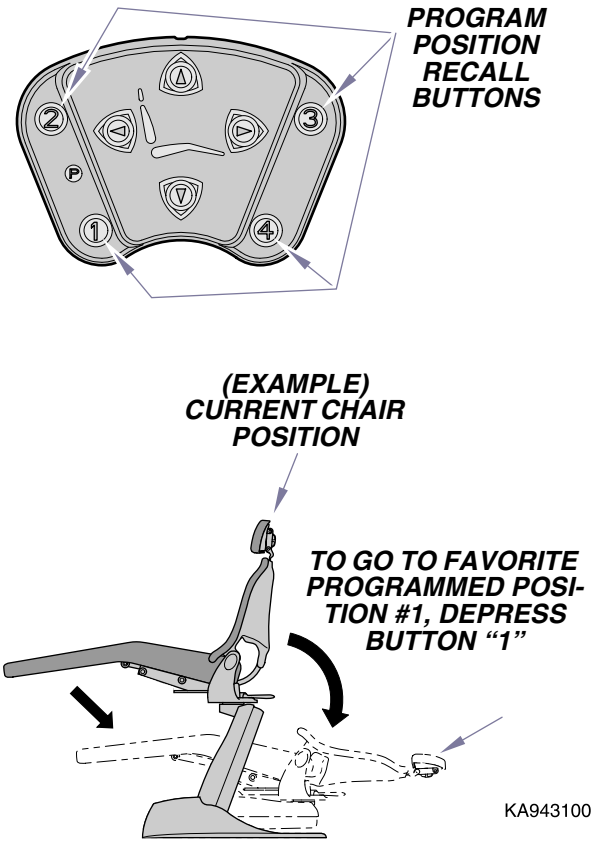

Figure 2-7. Programmed Positions

2.2 Testing Positioning Potentionmeter

A. Check Continuity (Ohms)

WARNING
Unplug chair power cord before removing covers or working on chair. Failure to comply could result in personal injury.

(1) Disconnect power to chair and remove upholstery or covers whichever is applicable to access potentiometer (refer to para 4.16 or 4.17).

(2) Set VOM on resistance (ohms) for a scale that can read up to 6K ohms.

(3) After removing plug connector, place meter probes (1, Fig. 2-8) on outside leads (A) of potentiometer (2) for total resistance. Reading should be 4K to 6K (ohms). Any reading outside this or if no continuity reading is present, replace potentiometer.

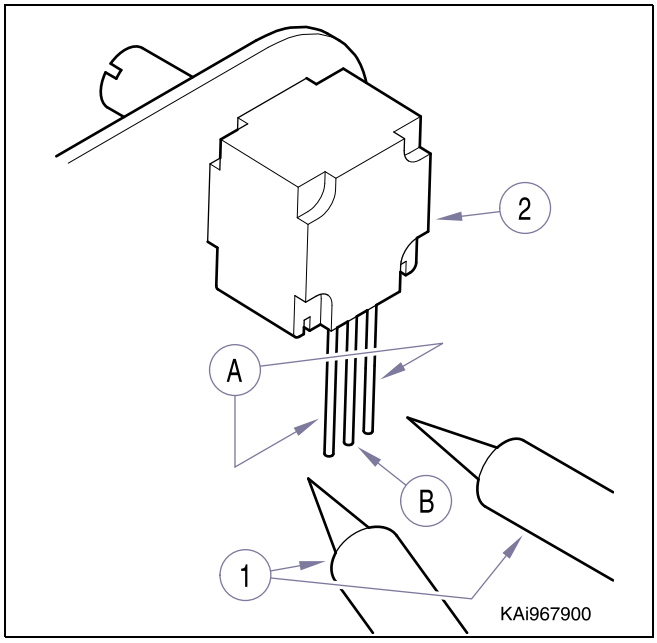

Figure 2-8. Testing Potentiometer.

(4) Move one meter probe to middle lead (B) on potentiometer.

(5) Slowly rotate potentiometer shaft fully one direction and then back the other.
Meter should show a smooth increase or decrease in resistance. If reading becomes erratic replace potentiometer (refer to para 4.16 or 4.17).

B. Check Voltage (VDC)

(1) Remove seat upholstery or appropriate covers to access back or base potentiometer (refer to para 4.16 or 4.17).

WARNING
Use caution to prevent electrical shock with chair plugged into outlet. Electrical components and connections are exposed.

(2) Plug chair into outlet.

(3) Set meter to read voltage DC on scale appropriate to read approximately 5 VDC.

(4) Place meter probes (1, Fig. 2-9) on two outside leads (A) of potentiometer (2).
Reading should be approximately 5 VDC (±1 VDC).
If voltage reading is zero (0), leads are broken in wire harness between potentiometer and P.C. board or P.C. is not working correctly (Refer to Troubleshooting Guide, Table 2-1).

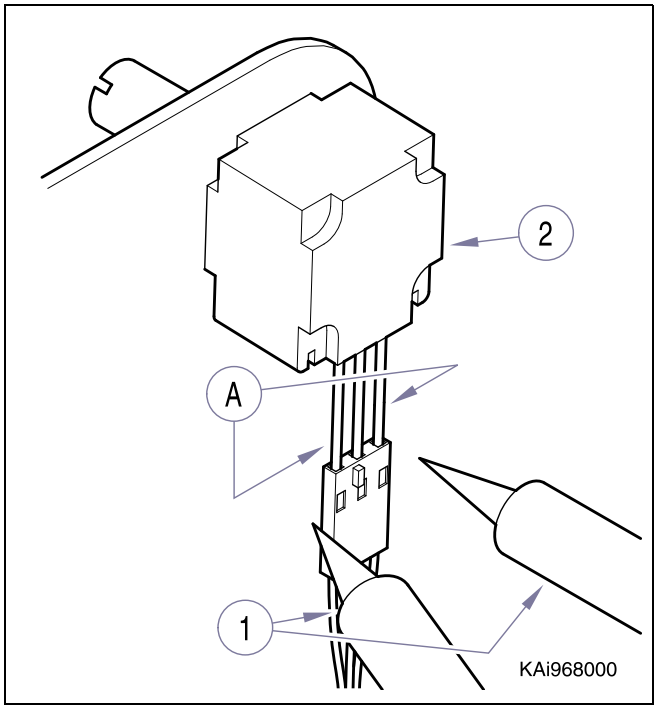

Figure 2-9. Testing Potentiometers

2.3 Troubleshooting Procedures

Table 2-1 is a Troubleshooting Guide which is used to determine causes of malfunctions. Refer to diagrams in Section V to assist in troubleshooting procedures.

WARNING
Use extreme caution when testing components with chair plugged into outlet. Line voltage is present. Failure to comply could result in personal injury.

Problem	Symptom	Probable Cause	Check	Correction
Chair will not operate when *any* function is selected (from any of the membrane switch panels or foot control switches).	When a membrane touchpad or foot control switch is pressed, nothing happens and relays cannot be heard energizing).	Power cord is not plugged into facility wall outlet.	Check to see if power cord is plugged in.	Plug power cord into facility wall outlet.
		Facility circuit breaker providing power to chair is tripped.	Check to see if facility circuit breaker is tripped. Plug a lamp into wall outlet that chair was plugged into and see if it operates.	If facility circuit breaker is tripped, determine what caused circuit breaker to trip, correct problem, and then reset / replace circuit breaker.
		Wire connections are loose.	Check all wiring connections from power cord to PC circuit board. Use a multimeter to perform continuity checks on wires. Check for line voltage at plug J19 (line power input) on pins 2 (blue) & 4 (brown).	Clean any dirty connections. Tighten any loose connections. Replace any damaged connections. Refer to Section V for Schematics.
		Fuse blown.	Remove fuse, F1, F2, and F3 from PC board and check fuses for continuity.	Replace blown fuse with fuse of same rating. Refer to Section V for Schematics.
		PC circuit board is malfunctioning. (**Note:** Incoming Line voltage is present at Power Input, J19, pins 2 [Blue] & 4 [Brown].)	Check for 12 VDC on pins 1 & 2 of J14. Check the LED's next to related relay when the specific function is being operated. Check visually for damage components and broken traces on PC board.	If no 12 VDC is present on J14 replace board. If LED's do not light during function, replace board. If damage is visible replace board. Refer to para 4.14.
	Chair has power, but no functions can be initiated from membrane touchpad and foot control.	Plug connector(s) loose or wire harnesses broken.	Check all plug connectors and harnesses.	Repair or replace malfunctioning plug connector(s) or wire harnesses. Refer to Section V for Schematics.
		SW1 Switch on PC Board is set in Calibration Mode (both switches 1 & 2 are ON)	Check settings on SW1 Switch.	Place SW1 switch settings in proper position for user's application. Refer to Section V, SW1 Switch Settings.

Problem	Symptom	Probable Cause	Check	Correction
Chair will not operate when *any* function is selected (from any of the membrane touchpads or foot control switches). (continued)	Chair has power, but no functions can be initiated from membrane touchpad and foot control. (continued)	PC Board malfunctioning. (**Note:** Incoming Line voltage is present at Power Input, J19, pins 2 [Blue] & 4 [Brown].)	Check for 12 VDC on pins 1 & 2 of J14. Check the LED's next to related relay when the specific function is being operated. Check visually for damage components and broken traces on PC board.	If no 12 VDC is present on J14 replace board. If LED's do not light during function, replace board. If damage is visible replace board. Refer to para 4.14.
One or more functions cannot be initiated from membrane touchpad or foot control.	Some functions can be initiated with membrane touchpad or foot control, but at least one cannot.	Switch on Membrane Touchpad or Foot Control is malfunctioning.	Perform a continuity check on each N.O. control switch in control (when switch is pressed, switch circuit should be closed) Refer to Section V for Schematics.	If control switch does not pass continuity check, replace control. Refer to para 4.6 or 4.21.
		Wires Broken or connections loose .	Check all wiring and related connections between control switches and PC circuit board.	Clean any dirty connections. Tighten or repair any loose or damaged connections. Refer to Section V for schematics.
		Capacitor for hydraulic pump motor weak or bad. (Up functions would not work)	Replace capacitor with a known good capacitor and check operation.	Replace capacitor. Refer to para 4.10.
		PC Board malfunctioning. (**Note:** Incoming Line voltage is present at Power Input, J19, pins 2 [Blue] & 4 [Brown].)	Check for 12 VDC on pins 1 & 2 of J14. Check the LED's next to related relay when the specific function is being operated. Check visually for damage components and broken traces on PC board.	If no 12 VDC is present on J14 replace board. If LED's do not light during function, replace board. If damage is visible replace board. Refer to para 4.14.
		BACK or BASE potentiometer plug is loose from specific potentiometer or wire leads are broken.	Check conditions of plug connectors and wire leads to potentiometers.	Connect plug to potentiometer or repair broken leads. Refer to Section V for schematic.
		BACK or BASE potentiometer is out of adjustment.	Check adjustment of BASE and/or BACK potentiometer(s).	Adjust potentiometer. Refer to para(s) 4.16, 4.17 or 4.18.
		BACK and / or BASE Potentiometer is damaged.	Check potentiometer(s). Refer to para 2.2.	Replace potentiometer(s). Refer to para(s) 4.16, 4.17 or 4.18.
BACK UP function does not work.	When any BACK UP button is depressed, chair will not move (all other functions work).	BACK UP solenoid coil has an open winding, disconnected or broken lead.	Check all wires to BACK UP Solenoid and connections at P.C. Board, pins 2 & 3 on J18. Check solenoid for an "open" coil. Refer to Section V for Schematics.	Repair wires and / or connections. Replace Hydraulic Solenoid Valve Assembly. Refer to para 4.13.
		BACK UP solenoid valve stuck in closed position .	After checking solenoid coil , connections, and wires, assure coil is energized when depressing BACK UP.	Replace Hydraulic Solenoid Valve Assembly. Refer to para 4.13.

Problem	Symptom	Probable Cause	Check	Correction
BACK UP function does not work. (continued)	When any BACK UP button is depressed, chair will not move (all other functions work). (continued)	Throttle Valve (TV3) on Hydraulic Solenoid Valve Assembly turned in too far or completely closed.	Check position of TV3 Throttle Valve. Refer to para 4.13 and BACK UP hydraulic schematic in Sect. V.	Adjust Throttle Valve (TV3). Refer to para 4.13.
		Hydraulic BACK cylinder leaking.	Check for leakage around hydraulic cylinder and fittings. Check for excessive fluid returning to reservoir from Vent line.	Replace Hydraulic Back Cylinder. Refer to para 4.7.
		Hydraulic Solenoid Valve Assembly is clogged preventing fluid flow.	Check for hydraulic fluid flow to Back Cylinder during operation. Refer to Section V for Schematics.	Replace Hydraulic Solenoid Valve Assembly. Refer to para 4.13.
		BACK potentiometer plug is loose from potentiometer or wire leads are broken.	Check conditions of plug connectors and wire leads to potentiometer.	Connect plug to potentiometer or repair broken leads. Refer to Section V for schematic.
		BACK potentiometer is out of adjustment.	Check adjustment of BACK potentiometer.	Adjust potentiometer. Refer to para 4.17 or 4.18.
		BACK Potentiometer is damaged.	Check potentiometer. Refer to para 2.2.	Replace potentiometer. Refer to para 4.17 or 4.18.
		PC Board malfunctioning.	When BACK UP is depressed, check LED next to K4 contacts to assure it is lit. Check for line voltage at J18, terminals 2 & 3. Refer to Section V for Schematics.	If no voltage is present at J18, terminals 2 & 3, when BACK UP is depressed, replace PC Board. Refer to para 4.14.
BACK DOWN function does not work.	When any BACK DOWN button is depressed, chair will not move (all other functions work).	Safety Bail Limit Switch(es) harness not installed correctly (loose).	Check both harness to assure they are connected tightly.	Connect harness correctly.
		Safety Bail Limit Switch(es) contacts open due to an obstruction hitting cover or Switch(es) malfunctioning, stuck open	Safety Bail cover depressing safety bail limit switch(es) actuator, opening contacts on switch. Check continuity on unoperated switch to assure normally closed (NC) contacts are closed.	Remove obstruction that causes cover to actuate limit switch(es). Replace Safety Bail Limit Switch(es). Refer to para 4.19.
		BACK DOWN solenoid coil has an open winding, disconnected or broken lead.	Check all wires to BACK DOWN Solenoid and connections at P.C. Board, pins 4 & 5 on J18. Check solenoid for an “open” coil. Refer to Section V for Schematics.	Repair wires and / or connections. Replace Hydraulic Solenoid Valve Assembly. Refer to para 4.13.
		BACK DOWN solenoid valve stuck in closed position .	After checking solenoid coil , connections, and wires, assure coil is energizes when depressing BACK DOWN.	Replace Hydraulic Solenoid Valve Assembly. Refer to para 4.13.

Problem	Symptom	Probable Cause	Check	Correction
BACK DOWN function does not work. (continued)	When any BACK DOWN button is depressed, chair will not move (all other functions work). (continued)	Throttle Valve (TV4) on Hydraulic Solenoid Valve Assembly turned in too far or completely closed.	Check position of TV4 Throttle Valve. Refer to para 4.13 and BACK DOWN hydraulic schematic in Sect. V.	Adjust Throttle Valve (TV4). Refer to para 4.13.
		Hydraulic Solenoid Valve Assembly is clogged preventing fluid flow.	Check for hydraulic fluid flow from Cylinder to Reservoir during operation. Refer to Section V for Schematics.	Replace Hydraulic Solenoid Valve Assembly. Refer to para 4.13.
		Cuspidor Limit Switch contacts open due to cuspidor hitting obstruction or malfunction.	Check if cuspidor is hitting obstruction and/or if limit switch contacts are open.	Remove obstruction. Replace Cuspidor limit switch. Refer to ProCenter® Delivery System Service & Parts.
		Cuspidor not installed and Jumper wire on J10 plug connector missing.	Check for a jumper wire on P.C. Board plug connector J10.	Install a jumper wire on terminals 1 & 2, plug connector J10. Refer to Section V for Schematics.
		BACK potentiometer plug is loose from potentiometer or wire leads are broken.	Check conditions of plug connectors and wire leads to potentiometer.	Connect plug to potentiometer or repair broken leads. Refer to Section V for schematic.
		BACK potentiometer is out of adjustment.	Check adjustment of BACK potentiometer.	Adjust potentiometer. Refer to para 4.17 or 4.18.
		BACK Potentiometer is damaged.	Check potentiometer. Refer to para 2.2.	Replace potentiometer. Refer to para 4.17 or 4.18..
		PC Board malfunctioning.	When BACK DOWN is depressed, check LED next to K5 contacts to assure it is lit. Check for line voltage at J18, terminals 4 & 5. Refer to Section V for Schematics.	If no voltage is present at J18, terminals 4 & 5, when BACK DOWN is depressed, replace PC Board. Refer to para 4.1.
BASE UP function does not work.	When any BASE UP button is depressed, chair will not move (all other functions work).	BASE UP solenoid coil has an open winding, disconnected or broken lead.	Check all wires to BASE UP Solenoid and connections at P.C. Board, pins 2 & 3 on J17. Check solenoid for an “open” coil. Refer to Section V for Schematics.	Repair wires and / or connections. Replace Hydraulic Solenoid Valve Assembly. Refer to para 4.13.
		BASE UP solenoid valve stuck in closed position .	After checking solenoid coil , connections, and wires, assure coil is energized when depressing BASE UP.	Replace Hydraulic Solenoid Valve Assembly. Refer to para 4.13.
		Throttle Valve (TV1) on Hydraulic Solenoid Valve Assembly turned in too far or completely closed.	Check position of TV1 Throttle Valve. Refer to para 4.13 and BASE UP hydraulic schematic in Section V.	Adjust Throttle Valve (TV1). Refer to para 4.13.
		Hydraulic BASE cylinder leaking.	Check for leakage around hydraulic cylinder and fittings. Check for excessive fluid returning to reservoir from Vent line.	Replace Hydraulic Base Cylinder. Refer to para 4.7.

Problem	Symptom	Probable Cause	Check	Correction
BASE UP function does not work. (continued)	When any BASE UP button is depressed, chair will not move (all other functions work). (continued).	Hydraulic Solenoid Valve Assembly is clogged preventing fluid flow.	Check for hydraulic fluid flow to Back Cylinder during operation. Refer to Section V for Schematics.	Replace Hydraulic Solenoid Valve Assembly. Refer to para 4.13.
		PC Board malfunctioning.	When BASE UP is depressed, check LED next to K2 contacts to assure it is lit. Check for line voltage at J17, terminals 2 & 3. Refer to Section V for Schematics.	If no voltage is present at J17, terminals 2 & 3, when BASE UP is depressed, replace PC Board. Refer to para 4.1.
BASE DOWN function does not work.	When any BASE DOWN button is depressed, chair will not move (all other functions work).	Safety Bail Limit Switch(es) harness not installed correctly (loose).	Check both harness to assure they are connected tightly.	Connect harness correctly.
		Safety Bail Limit Switch(es) contacts open due to an obstruction hitting cover or Switch(es) malfunctioning, stuck open	Safety Bail cover depressing safety bail limit switch(es) actuator, opening contacts on switch. Check continuity on unoperated switch to assure normally closed (NC) contacts are closed.	Remove obstruction that causes cover to actuate limit switch(es). Replace Safety Bail Limit Switch(es). Refer to para 4.19.
		BASE DOWN solenoid coil has an open winding, disconnected or broken lead.	Check all wires to BASE DOWN Solenoid and connections at P.C. Board, pins 4 & 5 on J17. Check solenoid for an “open” coil. Refer to Section V for Schematics.	Repair wires and / or connections. Replace Hydraulic Solenoid Valve Assembly. Refer to para 4.13.
		BASE DOWN solenoid valve stuck in closed position.	After checking solenoid coil , connections, and wires, assure coil is energizes when depressing BASE DOWN.	Replace Hydraulic Solenoid Valve Assembly. Refer to para 4.13.
		Throttle Valve (TV2) on Hydraulic Solenoid Valve Assembly turned in too far or completely closed.	Check position of TV2 Throttle Valve. Refer to para 4.13 and BASE DOWN hydraulic schematic in Sect. V.	Adjust Throttle Valve (TV2). Refer to para 4.13.
		Hydraulic Solenoid Valve Assembly is clogged preventing fluid flow.	Check for hydraulic fluid flow from Cylinder to Reservoir during operation. Refer to Section V for Schematics.	Replace Hydraulic Solenoid Valve Assembly. Refer to para 4.13.
		Cuspidor Limit Switch contacts open due to cuspidor hitting obstruction or malfunction.	Check if cuspidor is hitting obstruction and/or if limit switch contacts are open.	Remove obstruction. Replace Cuspidor limit switch. Refer to ProCenter® Delivery System Service & Parts.
		Cuspidor not installed and Jumper wire on J10 plug connector missing.	Check for a jumper wire on P.C. Board plug connector J10.	Install a jumper wire on terminals 1 & 2, plug connector J10. Refer to Section V for schematic.
		BASE potentiometer plug is loose from potentiometer or wire leads are broken.	Check conditions of plug connectors and wire leads to potentiometer.	Connect plug to potentiometer or repair broken leads. Refer to Section V for schematic.

Problem	Symptom	Probable Cause	Check	Correction
BASE DOWN function does not work. (continued)	When any BASE DOWN button is depressed, chair will not move (all other functions work). (continued)	BASE potentiometer is out of adjustment.	Check adjustment of BASE potentiometer.	Adjust potentiometer. Refer to para 4.16.
		BASE Potentiometer is damaged.	Check potentiometer. Refer to para 2.2.	Replace potentiometer. Refer to para 4.16.
		PC Board malfunctioning.	When BASE DOWN is depressed, check LED next to K3 contacts to assure it is lit. Check for line voltage at J17, terminals 4 & 5. Refer to Section V for schematic.	If no voltage is present at J17, terminals 4 & 5, when BASE DOWN is depressed, replace PC Board. Refer to para 4.1.
BASE DOWN *and* BACK DOWN functions do not work.	When BASE DOWN and BACK DOWN buttons are pressed, chair will not move. BASE UP and BACK UP functions work.	Safety Bail Limit Switch(es) harness not installed correctly (loose).	Check both harness to assure they are connected tightly.	Connect harness correctly.
		Safety Bail Limit Switch(es) contacts open due to an obstruction hitting cover or Switch(es) malfunctioning, stuck open	Safety Bail cover depressing safety bail limit switch(es) actuator, opening contacts on switch. Check continuity on unoperated switch to assure normally closed (NC) contacts are closed.	Remove obstruction that causes cover to actuate limit switch(es). Replace Safety Bail Limit Switch(es). Refer to para 4.19.
		Cuspidor Limit Switch contacts open due to cuspidor hitting obstruction or malfunction.	Check if cuspidor is hitting obstruction and/or if limit switch contacts are open.	Remove obstruction. Replace Cuspidor limit switch. Refer to ProCenter® Delivery System Service & Parts.
		Cuspidor not installed and Jumper wire on J10 plug connector missing.	Check for a jumper wire on P.C. Board plug connector J10.	Install a jumper wire on terminals 1 & 2, plug connector J10. Refer to Section V for schematic.
BASE UP *and* BACK UP functions do not work.	When BASE UP and BACK UP buttons are depressed, chair will not move. BASE DOWN and BACK DOWN functions work.	Internal thermal overload on hydraulic motor pump open due to running continuously or weak or malfunctioning overload.	Check continuity between white & red motor leads and yellow and red leads. Refer to Section V schematics.	Allow motor to cool for 10 minutes and recheck continuity. If overload resets inform operator that motor is for intermittent operation Running continuously for a 30 second period will cause overload to open. If overload does not reset replace hydraulic motor pump. Refer to para 4.9.
		Hydraulic Fluid in reservoir low.	Check reservoir for hydraulic fluid level.	Fill reservoir to correct level.. Refer to para 4.12.
		Capacitor on motor pump weak or inoperative.	Replace capacitor with known good capacitor of same rating.	Replace capacitor. Refer to para 4.10.
		Low voltage is being supplied to chair.	Check voltage at wall receptacle - should be between 110.0 to 126.0 VAC on 115 VAC units or 220 to 252 VAC on 230 VAC units.	Correct low voltage situation at wall receptacle.

Go To Table Of Contents

Problem	Symptom	Probable Cause	Check	Correction
BASE UP *and* BACK UP functions do not work. (continued)	When BASE UP and BACK UP buttons are depressed, chair will not move. BASE DOWN and BACK DOWN functions work. (continued)	Hydraulic motor pump electrical leads disconnected.	Check electrical connections on PC Board at J16, terminals 2 & 3.	Reconnect electrical leads to J16 on PC Board. Refer to Section V Schematics.
		Hydraulic motor pump has open winding(s).	Check resistance values of motor windings. Refer to Section V for schematic.	Replace Hydraulic Motor pump. Refer to para 4.9.
		Pressure relief valve open or leaking	Check if fluid is returning to reservoir when BASE UP and / or BACK UP functions are activated with no or normal load on chair.	Replace Solenoid Valve Assembly. Refer to para 4.13.
BASE drifts down.	BASE drifts down from elevated position.	BASE Hydraulic cylinder leaking past piston seals.	Check for excessive fluid returning to reservoir thru vent tubing of BASE cylinder.	Replace BASE hydraulic cylinder. Refer to para 4.8.
BACK drifts down.	BACK drifts down from elevated position.	BACK Hydraulic cylinder leaking past piston seals.	Check for excessive fluid returning to reservoir thru vent tubing of BACK cylinder.	Replace BACK hydraulic cylinder. Refer to para 4.7.
Hydraulic Motor Pump continues to run.	Depressing specific function button, hydraulic motor pump continues to run when chair reaches top or bottom limitations.	BACK or BASE potentiometer plug is loose from specific potentiometer or wire leads are broken.	Check conditions of plug connectors and wire leads to potentiometers.	Connect plug to potentiometer or repair broken leads. Refer to Section V for schematic.
		BACK or BASE potentiometer is out of adjustment.	Check adjustment of BASE and/or BACK potentiometer(s).	Adjust potentiometer. Refer to para(s) 4.16, 4.17 or 4.18.
		Potentiometer is damaged.	Check potentiometer(s). Refer to para 2.2.	Replace potentiometer(s). Refer to para(s) 4.16, 4.17 or 4.18.
Chair doesn't operate correctly under heavier loads.	Chair moves slowly or not at all under heavier loads.	Capacitor for Hydraulic Motor Pump is weak.	Replace capacitor with known good capacitor of same rating.	Replace capacitor. Refer to para 4.10.
		Low voltage is being supplied to chair.	Check voltage at wall receptacle - should be between 110.0 to 126.0 VAC on 115 VAC units or 220 to 252 VAC on 230 VAC units.	Correct low voltage situation at wall receptacle.
		Leakage past pressure relief valve.	Check for excessive fluid flowing back to reservoir.	Replace Hydraulic Solenoid Valve Assembly. Refer to para 4.13.
		Hydraulic cylinder(s) leaking past piston seals.	Check for excessive fluid returning to reservoir thru vent tubing of cylinder(s).	Replace hydraulic cylinder(s). Refer to para 4.7 and / or 4.8.
BASE DOWN travel is too slow.	Chair exceeds *normal* 15 second descent time from top position to bottom position w/ 180 lbs (82 kg) load on it.	Throttle Valve (TV2) is turned in too far restricting hydraulic fluid flow back to reservoir.	Check setting of Throttle Valve (TV2)	Adjust Throttle Valve (TV2). Refer to para 4.13 (Adjustments).

Go To Table Of Contents

Problem	Symptom	Probable Cause	Check	Correction
BASE DOWN travel is too fast.	Chair descends faster then *normal* 15 second descent time from top position to bottom position w/ 180 lbs (82 kg) load on it.	Throttle Valve (TV2) is open too far.	Check setting of Throttle Valve (TV2).	Adjust Throttle Valve (TV2). Refer to para 4.13 (Adjustments).
BACK DOWN travel is too slow.	Chair exceeds *normal* 15 second descent time from top position to bottom position w/ 180 lbs (82 kg) load on it.	Throttle Valve (TV4) is turned in too far restricting hydraulic fluid flow back to reservoir.	Check setting of Throttle Valve (TV4)	Adjust Throttle Valve (TV4). Refer to para 4.13 (Adjustments)
		BACK lift spring(s) detached or broken.	Check conditions of BACK lift spring(s).	Connect or replace BACK lift spring(s).
BACK DOWN travel is too fast.	Chair descends faster then *normal* 15 second descent time from top position to bottom position w/ 180 lbs (82 kg) load on it.	Throttle Valve (TV4) is open too far.	Check setting of Throttle Valve (TV4).	Adjust Throttle Valve (TV4). Refer to para 4.13 (Adjustments).
Hydraulic Pump is exceedingly noisy.	Noisy motor pump during BACK UP or BASE UP.	Restriction in Suction line from reservoir causing negative pressure.	Check for kinks in tubing and / or restrictions in suction line.	Repair or replace tubing.
		Internal parts failure in motor pump.	Check for noise or vibrations from motor pump during operation.	Replace motor pump. Refer to para 4.9.
Headrest difficult to adjust or does not stay in position.	Excessive force is required to position the headrest.	Headrest slide is too tight and needs adjusted.	Check adjustment of headrest slide.	Adjust the headrest slide assembly. Refer to para 4.4.
	Headrest does not lock into a position or slides downward on own.	Headrest slide is too loose and needs adjusted.	Check adjustment of headrest slide.	Adjust the headrest slide assembly. Refer to para 4.4.
Rotational Brake not working.	Brake is off, but chair top is binding when rotated.	Brake is out of adjustment (needs loosened).	Check adjustment of brake.	Adjust brake. Refer to para 4.5.
	Brake lever is difficult to engage.	Brake is out of adjustment (needs loosened).	Check adjustment of brake.	Adjust brake. Refer to para 4.5.
	Chair top rotates when BRAKE lever is in locked position.	Brake is out of adjustment (needs tightened).	Check adjustment of brake.	Adjust brake. Refer to para 4.5.

SECTION III
SCHEDULED MAINTENANCE

3.1 Scheduled Maintenance

Table 3-1 is a Scheduled Maintenance Chart which lists inspections and services that should be performed periodically on the chair. These inspections and services should be performed as often as indicated in the chart.

Interval	Inspection or Service	What to Do
Semi-annually	Obvious damage	Visually check condition of chair for obvious damage such as: cracks in components, missing components, dents in components, frayed or damaged cords, or any other visible damage which would cause chair to be unsafe to operate or would compromise its performance. Repair chair as necessary.
	Fasteners / hardware	Check chair for missing or loose fasteners / hardware. Replace any missing hardware and tighten any loose hardware as necessary.
	Warning and instructional decals	Check for missing or illegible decals. Replace decals as necessary.
	Pivot points / moving parts / accessories	Lubricate all exposed pivot points, moving parts, and accessories with silicone based lubricant.
	Membrane switch panels	Check each switch on each membrane switch panel for proper operation. Depress each membrane switch to make sure selected function operates. If any switch does not work, refer to Troubleshooting Guide in Section 2.
	Foot control	Check each switch on foot control for proper operation. Depress each foot control switch to make sure selected function operates when its button is depressed. If any switch does not work, refer to Troubleshooting Guide in Section 2.
	Base and Back Hydraulic Cylinders	Check Base and Back hydraulic cylinders and related fittings . If cylinders or fittings will not operate properly due to external or internal hydraulic fluid leakage, repair or replace cylinder or fitting(s). Refer to para(s) 4.7 and / or 4.8.
	Hydraulic Motor Pump and Capacitor	Check hydraulic motor pump operation per instructions in Operational Test, para 2.1. If motor does not lift properly refer to Troubleshooting, para 2.3 and repair or replace malfunctioning component(s).
	Hydraulic Reservoir	Check condition of reservoir, related fittings and fluid level. If necessary, correct any problem and / or add fluid. Refer to para(s) 4.11 and 4.12.
	Headrest	Check headrest for proper operation by sliding headrest up and down. Headrest should not take excessive force to move but should require a slight force to begin movement. If necessary, adjust headrest. Refer to para 4.4.
	Rotation	Check rotation for proper operation. Unlock brake and rotate chair top. Chair top should rotate smoothly and easily 30° (15° for L / R Models) in each direction from centerline of chair. If binding occurs, adjust or repair brake. Refer to para 4.5. Move brake release lever to brake position and attempt to rotate chair top. Chair top should <u>not</u> be able to be moved. If necessary, adjust or repair brake. Refer to para 4.5.
	Safety Bail Limit Switches	Test both Safety Bail Limit switches to assure they function, stopping the chair's. Press upward on the bottom lift arm cover during the descent. If descent continues adjust or replace malfunctioning limit switch(es). Refer to para 4.18.
	Upholstery	Check all upholstery for rips, tears, or excessive wear.
	Accessories	Check that all accessories have all of their components and that they function properly.
	Operational Test	Perform an Operational Test to determine if the chair is operating within its specifications (Refer to para 2.1). Replace or adjust any malfunctioning components.

SECTION IV
MAINTENANCE / SERVICE INSTRUCTIONS

4.1 Introduction

WARNING
Refer to Operator Manual for complete instructions on operating the dental chair. Failure to do so could result in personal injury.

NOTE
Perform an operational test on the dental chair after repair is completed to confirm repair was properly made and that all malfunctions were repaired.

The following paragraphs contain removal, installation, repair, and adjustment procedures for the dental chair.

4.2 Upholstery

A. Removal

(1) Move headrest (1, Fig. 4-1) assembly upward.

(2) Remove two screws (2) that secure arms of back cushion (3) to back casting.

(3) Pull upward on chair back cushion (3) to remove it from back mounting studs (4).

(4) Loosen six threaded knobs (5) and remove seat upholstery (6).

(5) Remove three screws (7) and headrest upholstery (8).

B. Installation

(1) Install headrest upholstery (8, Fig. 4-1) and secure with three screws (7).

(2) Install seat upholstery (6, Fig. 4-1) and secure with six threaded knobs (5).

(3) Place back cushion (3) in position on mounting studs (4) and push downward to lock in place.

(4) Secure arms of back cushion (3) to back casting with two screws (2).

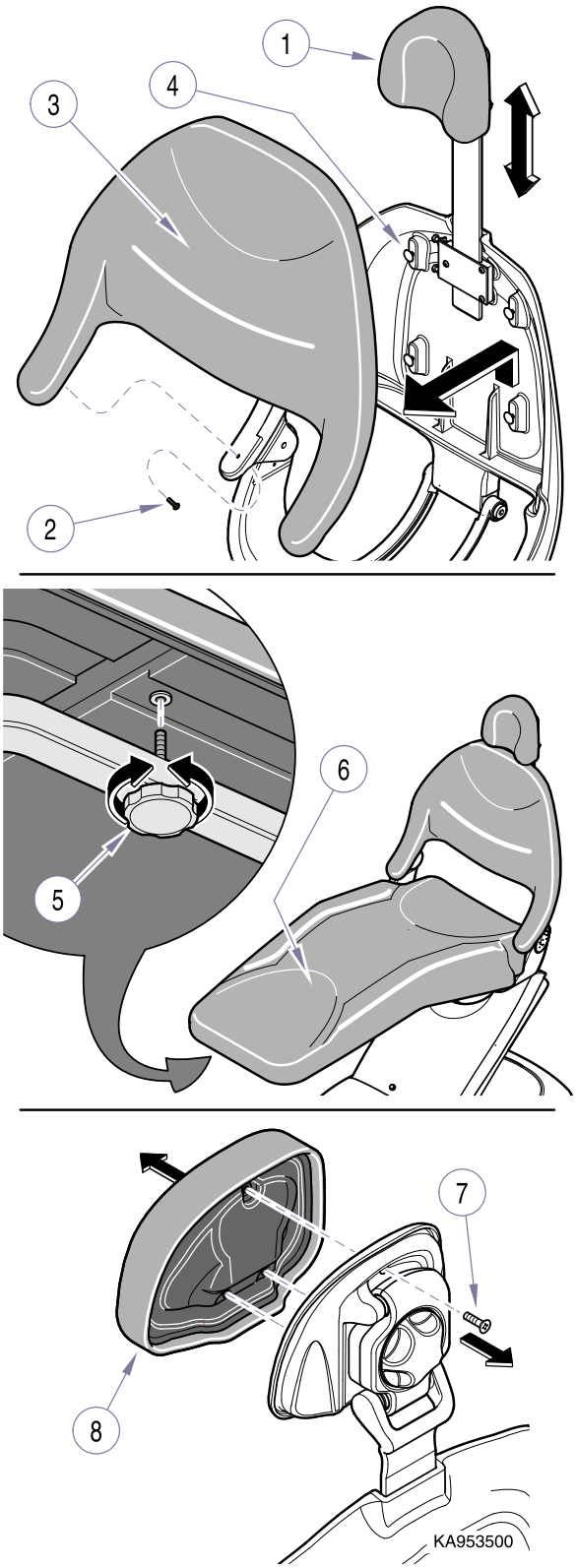

Figure 4-1. Upholstery

4.3 Covers

A. Removal

WARNING
Unplug chair power cord before removing covers or working on chair. Failure to comply could result in personal injury.

(1) Unplug chair power cord.

(2) Remove hydraulic cover (1, Fig. 4-2), three screws.

(3) Remove safety bail cover (2):

a.) Pushing inward on top of cover while pulling down to unhook top brackets (4).

b.) Rotate cover down and pull away from chair to remove.

(4) Remove end cover (5), two screws.

EQUIPMENT ALERT
Use care when removing top lift arm cover to prevent damaging pilot light.

(5) Remove four screws that secure lift arm cover (6) to frame. Carefully swing cover away from frame, and disconnect leads to pilot light (7).

B. Installation

(1) Install pilot light (7, Fig. 4-2) on lift arm cover (6).

(2) Connect red lead to + terminal (A) of pilot light (7), plug chair in and check operation. If light does not glow, unplug chair and reverse leads.

(3) Install lift arm cover (6) on chair and secure with four screws.

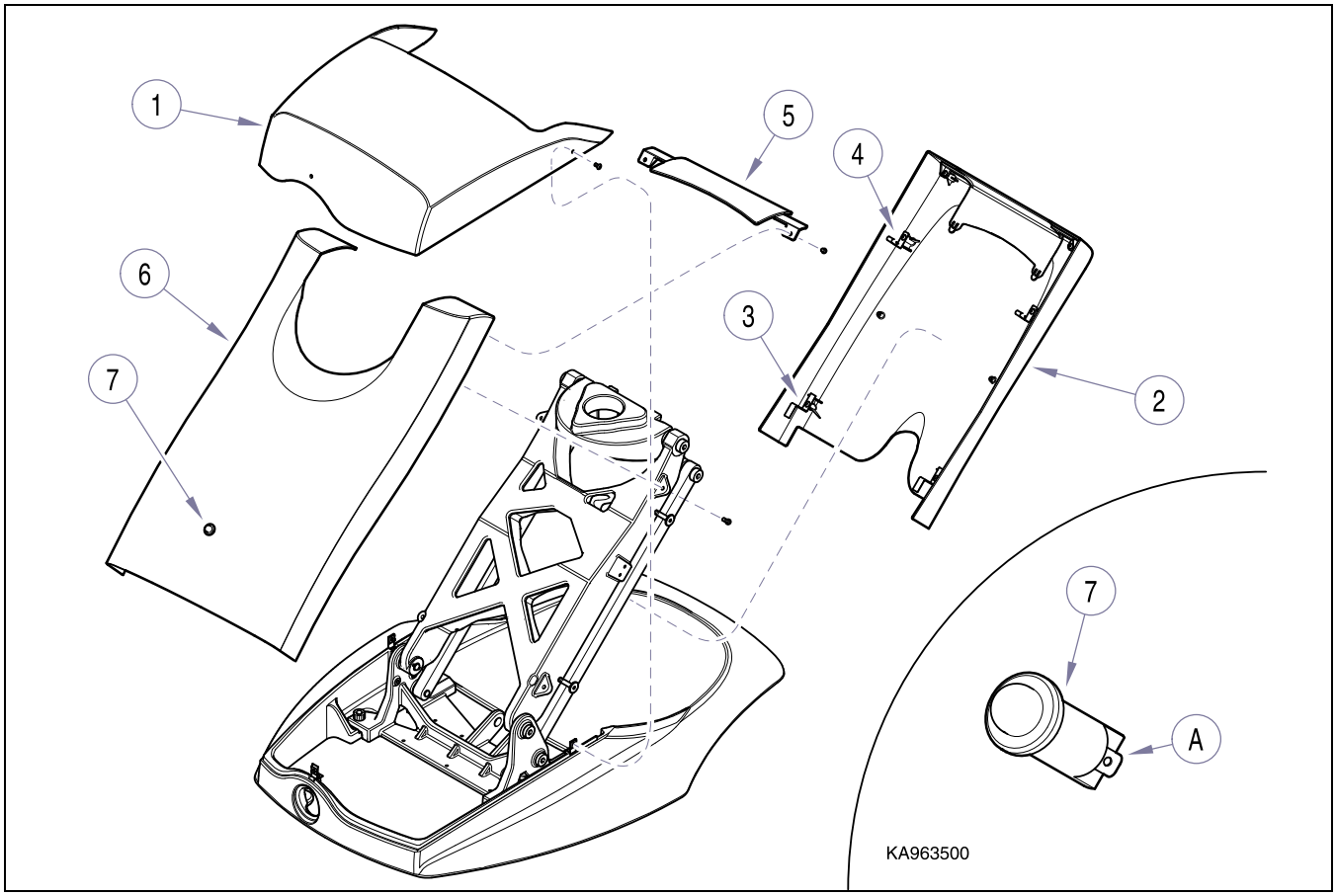

Figure 4-2. Covers

(4) Install end cover (5), two screws.

(5) Install safety bail cover (2):

a.) Hook lower brackets (3) onto lower mounting posts.

b.) Swing cover up and hook top brackets (4) onto top mounting posts.

(6) Install hydraulic cover (1), three screws.

EQUIPMENT ALERT
Plug table into wall outlet and check operation. During base down, if safety bail cover is pressed inward until bail safety switch(es) operate (open), base down travel should stop.

(7) Check operation of chair and safety bail limit switches.

4.4 Headrest

A. Adjustment

(1) Raise Back Up function all the way up.

(2) Remove back upholstery (refer to para 4.2).

(3) Loosen two jam nuts (1, Figure 4-3).

EQUIPMENT ALERT
Tighten or loosen two adjustment screws (2) evenly to allow for full and even surface contact of friction tangs. Failure to do so could result in uneven friction braking or abnormal wearing of parts.

(4) If headrest assembly (A) slides down by itself or moves too easily, tighten two adjustment screws (2).

If headrest assembly (A) requires excessive force to position, loosen two adjustment screws (2).

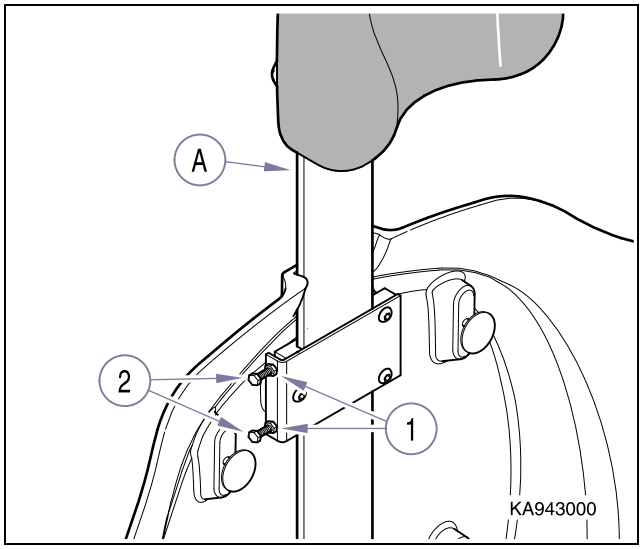

Figure 4-3. Headrest

(5) Test friction setting by sliding headrest assembly (A) in and out. Repeat step (4) until desired friction setting is achieved.

(6) While holding adjustment screws (2) with a wrench, tighten jam nuts (1).

4.5 Rotational Brake

A. Removal

(1) Raise chair to highest position.

WARNING
Unplug chair power cord before removing covers or working on chair. Failure to comply could result in personal injury.

(2) Unplug chair power cord, remove safety bail and end covers (refer to para 4.3).

(3) Remove allen screw (1, Fig. 4-4) and handle (2) using a 5/32" allen wrench.

(4) Remove spacer nut (3), lower thrust bearing (4), and rotation stop weldment (5) using a 9/16" wrench.

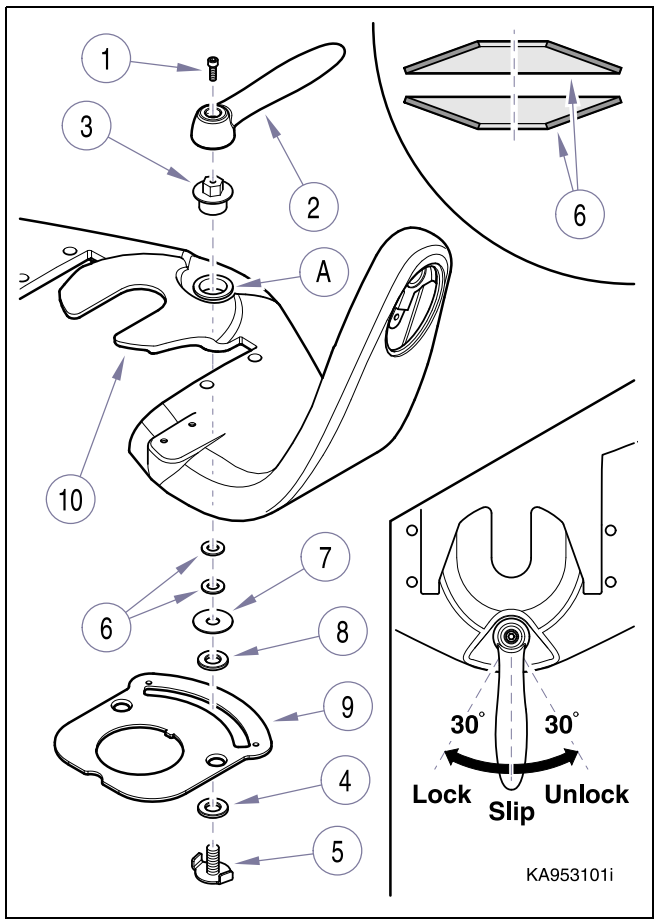

Figure 4-4. Rotational Brake

(5) Slide two belleville washers (6), flat washer (7), and upper thrust bearing (8) out from top of brake plate (9).

(6) Inspect both thrust bearings (4 & 8) and replace if necessary.

B. Installation

(1) Place flat washer (7), upper thrust bearing (8), and belleville washers (6) in position on brake plate (9). Center them beneath hole (A) in yoke plate (11).

(2) Install lower thrust bearing (4) on rotation stop weldment (5).

NOTE
The tabs on the rotation stop weldment must match the radius of the brake plate cut-out in order to fit properly.

(3) Hold rotation stop weldment (5) in position on bottom side of brake plate (9) and screw in brake spacer nut (3) until snug.

(4) Using handle (2), adjust brake spacer nut (3) until a solid brake condition is observed when handle (2) is rotated to Brake position.

(5) Install screw (1) to secure handle (2).

(6) Check operation. Readjust if necessary:

a.) Center, “Slip” position, Chair should rotate but have resistance against brake.

a.) From center, move handle 30° toward patient’s left side of chair or “Lock” position. Chair should not move when pressure is applied.

b.) From center, move handle 30° toward patient’s right side of chair or “Unlock” position. Chair should move freely approximately 30° from center each way.

4.6 Membrane Touchpad

A. Removal

WARNING
Unplug chair power cord before removing covers or working on chair. Failure to comply could result in personal injury.

(1) Unplug chair power cord.

(2) Remove mounting screw (1, Fig. 4-5) using a 7/64" allen wrench.

EQUIPMENT ALERT
Note orientation of plug connector to touchpad pin connector to assure they are correctly attached during installation.

(3) After noting orientation of plug connector (2) to pin connector (3), detach and remove touchpad assembly (4).

B. Installation

(1) Attach plug connector (2) to touchpad pin connector (3) in the correct orientation.

(2) Install the mounting screw (1) and check operation.

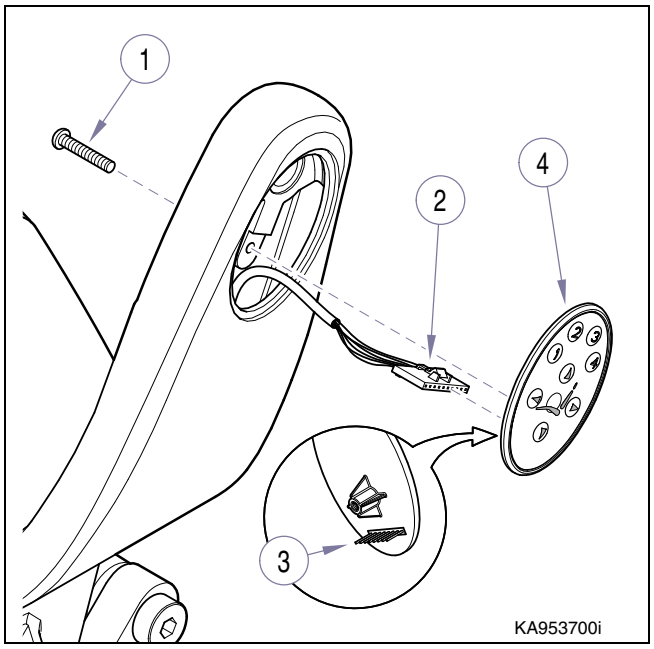

Figure 4-5. Membrane Touchpad

4.7 Hydraulic Back Cylinder.

A. Removal

(1) Remove the seat upholstery (refer to para 4.2).

(2) Place back (1, Fig. 4-6) in complete down position to remove pressure from cylinder and lines.

WARNING
Unplug chair power cord before removing covers or working on chair. Failure to comply could result in personal injury.

(3) Unplug chair power cord..

NOTE
The following Equipment Alert and step (4) pertains **only** to chairs with serial numbers **NT1000 thru NT1598, and NZ1000 thru NZ1019**.

EQUIPMENT ALERT
Do **not** manually rotate back potentiometer sensor shaft (2) when replacing parts in chassis. After lowering back to complete down position, place a location mark on top of auger shaft for later reference.

(4) Place location mark (A) on top of back potentiometer sensor shaft (2).

(5) Unhook back springs (3) from foot end of chassis and remove springs.

(6) While lifting up back section (1), place a 6" (15 cm) block (4) between face plate (5) and yoke block weldment (6).

(7) Place towels beneath hydraulic cylinder (7) to absorb excess fluid, cut cable tie (8), disconnect pressure (9) and vent hoses (10).

(8) Remove four screws (11) and hydraulic cylinder (7).

(9) Remove fittings (12) from hydraulic cylinder (7).

B. Installation

EQUIPMENT ALERT
Failure to use hydraulic sealant on fittings may result in leakage.

EQUIPMENT ALERT
Fittings on cylinder must be installed so openings face each other. Rod end fitting, must be turned inward until approximately two threads are visible or springs may rub against fitting.

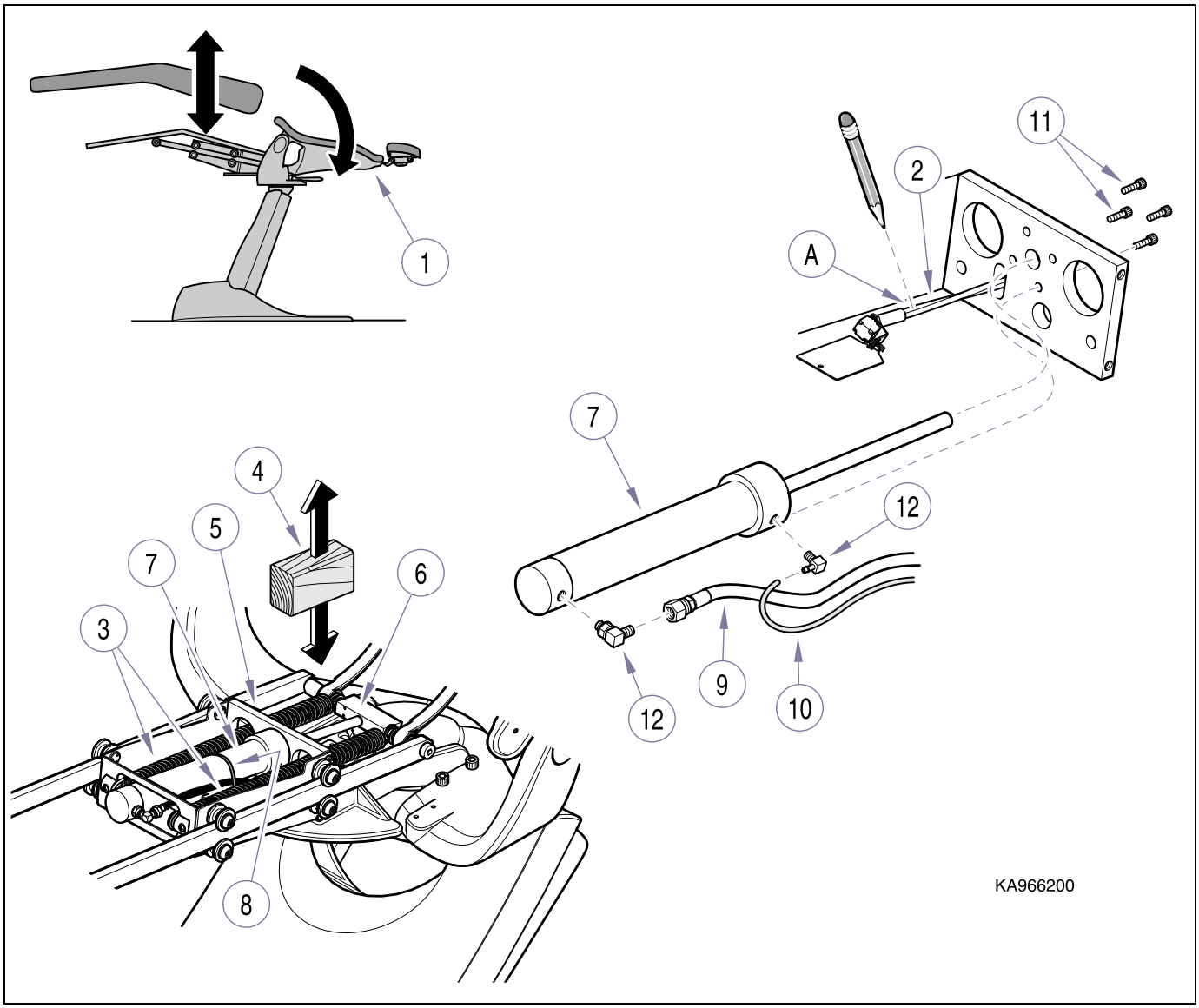

Figure 4-6. Back Hydraulic Cylinder

(1) After removing shipping plugs from hydraulic cylinder (7, Fig. 4-6), install fittings (12).

(2) Install hydraulic cylinder (7), four mounting screws (11), connect pressure (9), vent (10) hoses, and secure with cable tie (8).

EQUIPMENT ALERT
On chairs with serial number **N1000 thru NT1598, and NZ1000 thru NZ1019** assure location mark (A) on potentiometer sensor shaft (2) is in same position before hydraulic cylinder was removed.

(3) Supporting Back Section (1), remove block (4).

NOTE
For ease of installation connect springs (3) to Back Section first and then to Seat Section. Assure nylon washers (13) are positioned on both sides of spring hooks when connecting springs to Back Section (1).

(4) Connect springs (3).

(5) Check hydraulic fluid level (refer to Hydraulic Fluid Level, para 4.12), then run chair through several functions and check for leaks.

(6) Plug chair into outlet, run back section up and down while checking for leaks.

(7) Install seat upholstery.

4.8 Hydraulic Base Cylinder

A. Removal

(1) Remove the seat and back upholstery (refer to para 4.2) and rotate seat to one side.

WARNING
Unplug chair power cord before removing covers or working on chair. Failure to comply could result in personal injury.

(2) Unplug chair power cord.

(3) Remove covers (refer to para. 4.3).

(4) If base hydraulic cylinder is **operable**:

WARNING
Use caution to prevent electrical shock with chair plugged into outlet. Electrical components and connections are exposed.

a.) Plug chair power cord into outlet.

NOTE
On chairs that contain delivery head assembly, cuspidor and / or assistant's console it may be necessary to locate the jack stand(s) in some other location. Assure the stands are positioned to securely support the load without damage to the chair or accessories.

b.) Raise Base Up function a minimum of 9" (23 cm) to get jack stand(s) (1, Fig. 4-7) beneath upper lift casting (2).

c.) Lower Base Down function until chair rest securely on jack stand(s) (1).

DANGER
Make sure chair top is securely supported before starting to remove base hydraulic cylinder. Failure to comply could result in chair top collapsing causing serious personal injury or death.

d.) Unplug chair from outlet.

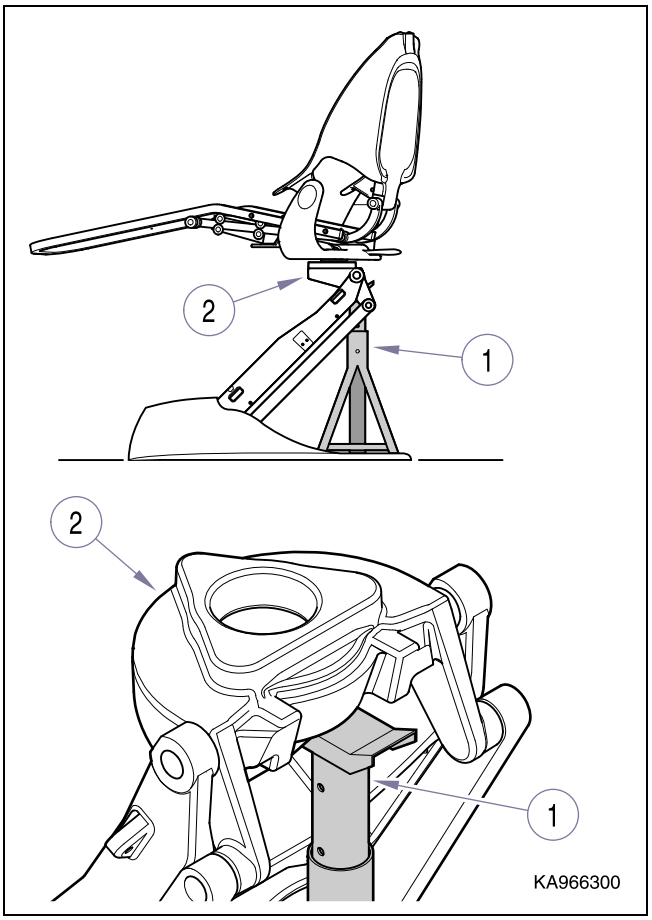

Figure 4-7. Hydraulic Base Cylinder

(5) If base hydraulic cylinder is **not operable**:

a.) Unplug chair power cord from outlet.

EQUIPMENT ALERT
Use care to prevent damage to the electrical leads and hydraulic lines when locating the scissor jack.

b.) Place a scissor jack (1, Fig. 4-8) or equivalent beneath upper lift casting (2) and raise chair a minimum of 9" (23 cm).

NOTE
On chairs that contain delivery head assembly, cuspidor and / or assistant's console it may be necessary to locate the jack stand(s) in some other location. Assure the stands are positioned to securely support the load without damage to the chair or accessories.

a.) Place jack stand(s) (3) beneath upper lift casting (2) and lower chair until it rest securely on jack stand(s) (3).

DANGER
Make sure chair top is securely supported before starting to remove base hydraulic cylinder. Failure to comply could result in chair top collapsing causing serious personal injury or death.

WARNING
For personal safety, work on base hydraulic cylinder from front of chair. Do not place hands or arms beneath lift arm casting.

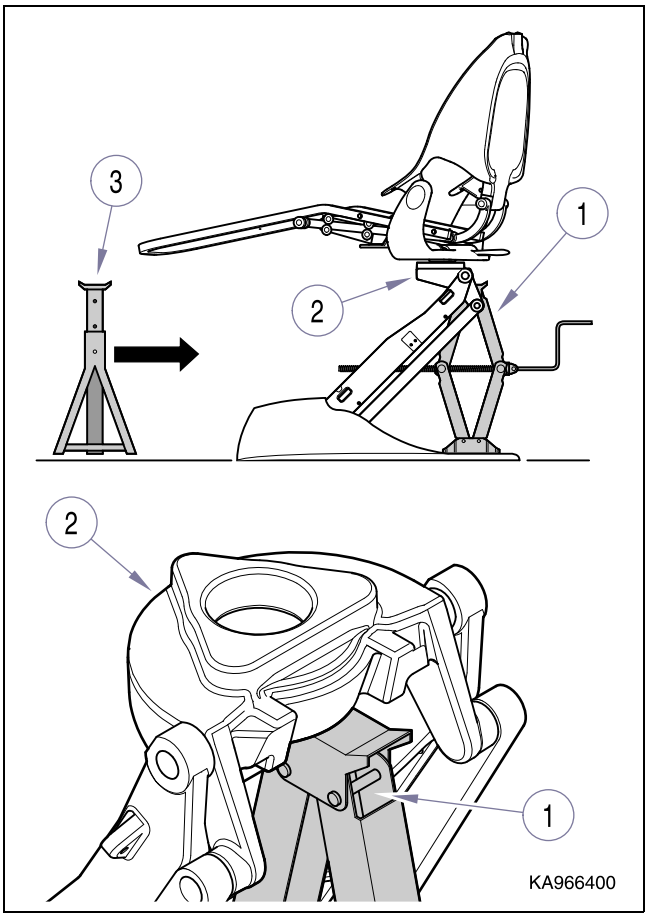

Figure 4-8. Hydraulic Base Cylinder

(6) Mark location of cable tie (1, Fig. 4-9) that secure base cylinder leak line (2) then remove tie (1).

(7) Place towels beneath valve block assembly (3) and reservoir (4) then disconnect hydraulic lines (2) from base cylinder (5).

(8) Remove hairpin cotter (6) from rod-end of cylinder.

(9) Remove hairpin cotter (6) from clevis pin (7) and extract clevis pin from lower lift casting (8).

(10) Remove hydraulic base cylinder (5).

(11) Remove two metal washers (9) and plastic washer (10) from rod-end of cylinder.

(12) Remove hydraulic lines (2) and fittings (11) from base cylinder (5).

B. Installation

WARNING
For personal safety, work on base hydraulic cylinder from front of chair. Do not place hands or arms beneath lift arm casting.

EQUIPMENT ALERT
Failure to use hydraulic sealant on fittings may result in leakage.

(1) After removing shipping plugs from base cylinder (5, Fig. 4-9), install fittings (11) and lines (2).

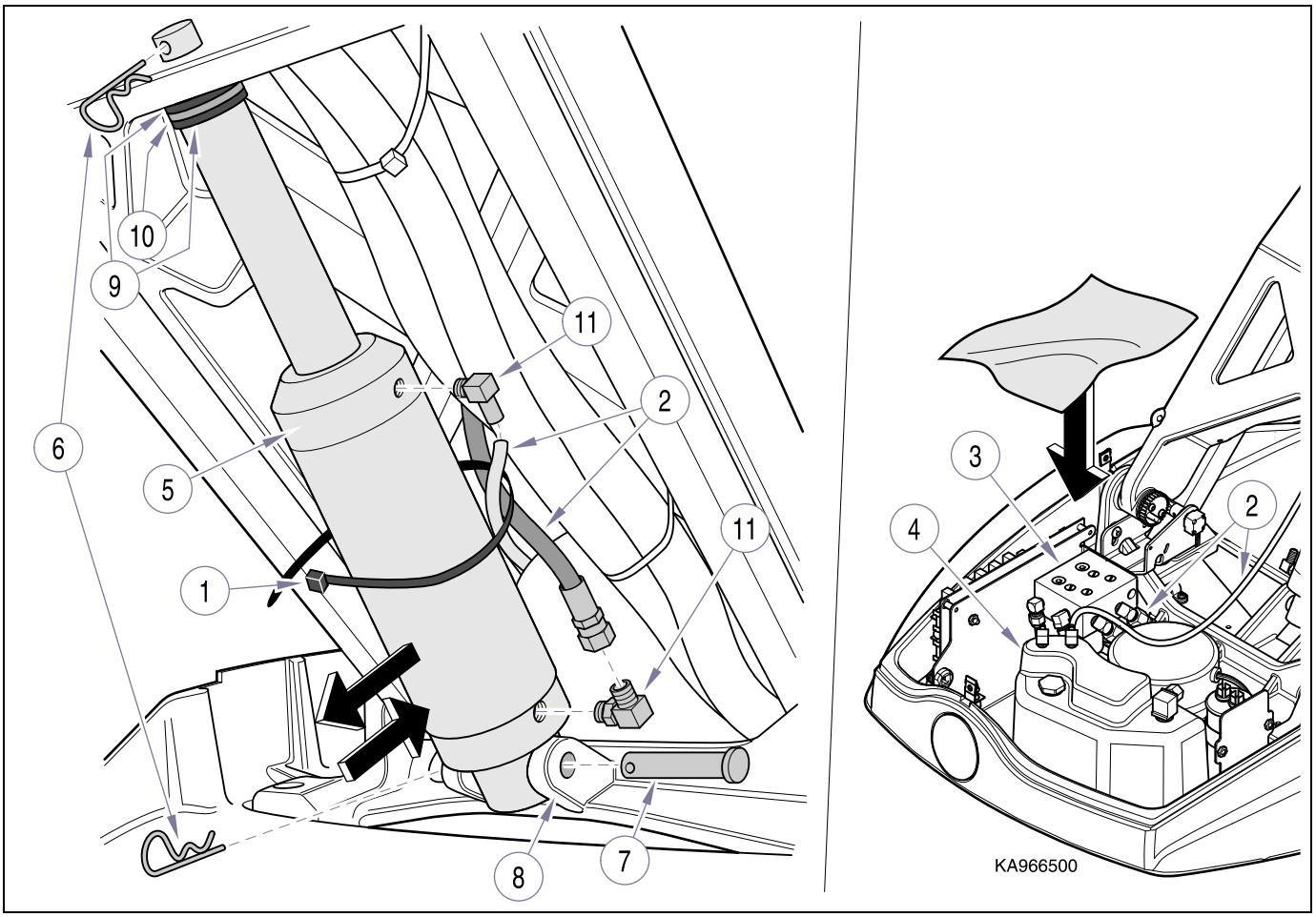

Figure 4-9. Hydraulic Base Cylinder

(2) Install two metal washers (9) and plastic washer (10) on rod-end of cylinder (5).

(3) Place base cylinder (5) in position, and install clevis pin (7) and hairpin cotter (6).

(4) Connect hydraulic lines (2) to valve block assembly (3) and reservoir (4).]

WARNING
Use caution to prevent electrical shock with chair plugged into outlet. Electrical components and connections are exposed.

(5) Plug chair into electrical outlet.

(6) ***Carefully*** jog Base Up until rod-end of base cylinder (5) is located in hole of upper lift casting.

(7) Install hairpin cotter (6).

(8) Install cable ties (1) at previously marked locations.

(9) Press Base Up to raise chair and remove jack stand(s) (3, Fig. 4-8).

(10) Check hydraulic fluid level (refer to Hydraulic Fluid Level, para 4.12), then run chair through several functions and check for hydraulic leaks.

(11) Unplug chair and install covers (refer to para 4.3) and upholstery (refer to para 4.2).

4.9 Hydraulic Pump

A. Removal

(1) Rotate seat to one side.

WARNING
Unplug chair power cord before removing covers or working on chair. Failure to comply could result in personal injury.

(2) Unplug chair power cord.

(3) Remove hydraulic cover (refer to para. 4.3).

(4) Tag, then disconnect motor pump electrical leads (1, Fig. 4-10)

NOTE
Place towel or equivalent beneath hydraulic lines and fittings to absorb any residual hydraulic fluid.

(5) Place towels beneath outlet (4) and inlet (5) fittings, then disconnect hydraulic lines.

(6) Remove seven mounting screws (three located on reservoir base) from hydraulic chassis (6).

NOTE
When removing motor pump mounting nuts (7) use a pliers to prevent rubber mounting grommets on motor pump (3) from turning.

(7) Carefully lift hydraulic chassis (6) near motor pump (3) to gain access to three mounting nuts (7). Remove mounting nuts (7) and washers (8) using a 13 mm wrench.

(8) Remove motor pump (3).

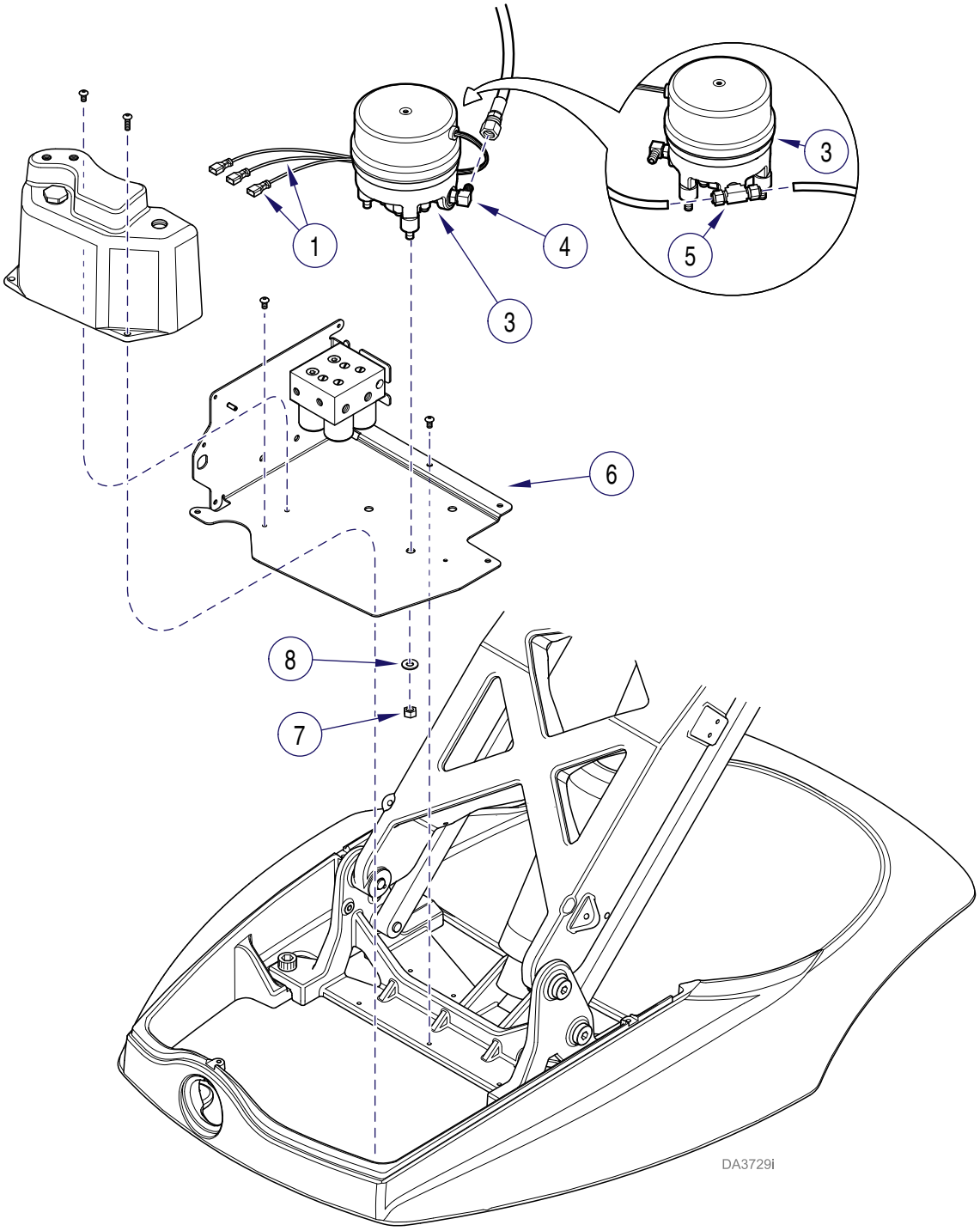

Figure 4-10. Hydraulic Motor Pump

B. Installation.

EQUIPMENT ALERT
Do not over-tighten mounting nuts. Snug up nuts and turn 1/2 turn.

(1) Place motor pump (3, Fig. 4-10) in position on hydraulic chassis (6) and secure with three washers (8) and mounting nuts (7).

(2) Secure hydraulic chassis (6) to base casting with seven mounting screws. Longer mounting screws are installed on reservoir base.

(3) Connect appropriate hydraulic lines to pump outlet fitting (4) and inlet fitting (5) (refer to para 5.1 for schematics).

(4) Connect electrical leads (1), (refer to para 5.1 for schematics).

EQUIPMENT ALERT
Using wrong length screw when connecting ground lead to motor pump could result in damage to motor pump. **Use only a M5 x 6 screw.**

(5) Connect ground lead (2) to motor pump (3) using a M5 x 6 screw.

(6) Check hydraulic fluid level (refer to para 4.12).

WARNING
Use caution to prevent electrical shock with chair plugged into outlet. Electrical components and connections are exposed.

(7) Plug chair into outlet and run operational test (refer to para 2.1). Check for hydraulic leakage.

(8) Unplug chair and install hydraulic cover.

4.10 Capacitor, Motor Pump

A. Removal

(1) Rotate seat to one side.

WARNING
Unplug chair power cord before removing covers or working on chair. Failure to comply could result in personal injury.

(2) Unplug chair power cord.

(3) Remove hydraulic cover (refer to para. 4.3)

WARNING
Before touching capacitor terminals discharge capacitor. Using an insulated handle screwdriver, jumper across terminals. Failure to comply could result in personal injury.

(4) Discharge capacitor (1, Fig. 4-11).

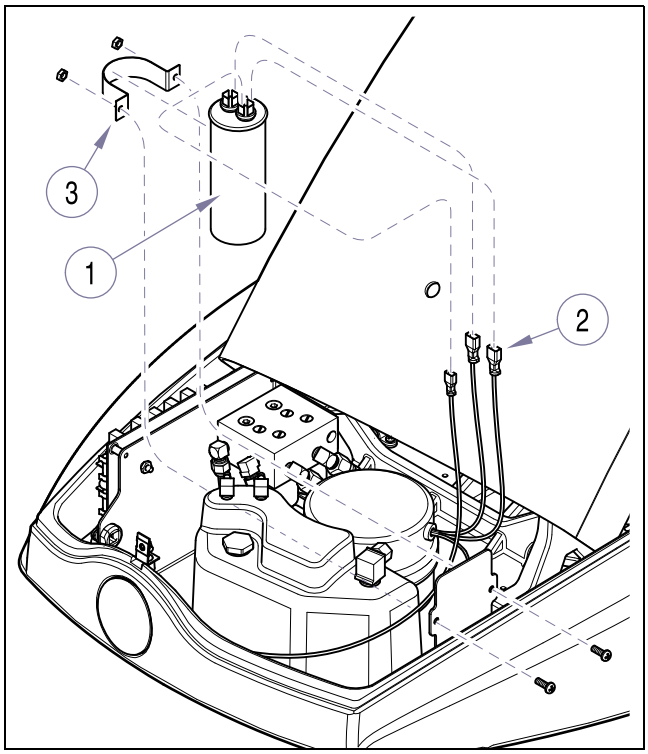

Figure 4-11. Capacitor, Motor Pump

(5) Tag and disconnect electrical leads (2).

NOTE
The capacitor may be of cylindrical shape (earlier units) and secured with a bracket. It could also be rectangular shape held in place with one mounting screw.

(6) Loosen mounting bracket (3) or mounting screw and remove capacitor (1).

B. Installation

EQUIPMENT ALERT
Assure new capacitor is of correct microfarad and voltage rating as required in electrical schematic of chair. Refer to schematics in Section V.

(1) Insert capacitor (1, Fig. 4-11) in mounting bracket (3) and tighten bracket or tighten mounting screw.

(2) Connect electrical leads (2).

(3) Install hydraulic cover, plug chair into outlet, and check operation.

4.11 Hydraulic Reservoir

A. Removal

WARNING
Assure chair base and back are both in the complete retracted (down) positions before disconnecting any hydraulic lines or components. Failure to comply could result in personal injury.

(1) Place chair base and back all the way down.

(2) Rotate seat to one side.

WARNING
Unplug chair power cord before removing covers or working on chair. Failure to comply could result in personal injury.

(3) Unplug chair power cord.

(4) Remove hydraulic cover (1, Fig. 4-12).

NOTE
Place towel or equivalent beneath hydraulic lines and fittings to absorb any residual hydraulic fluid.

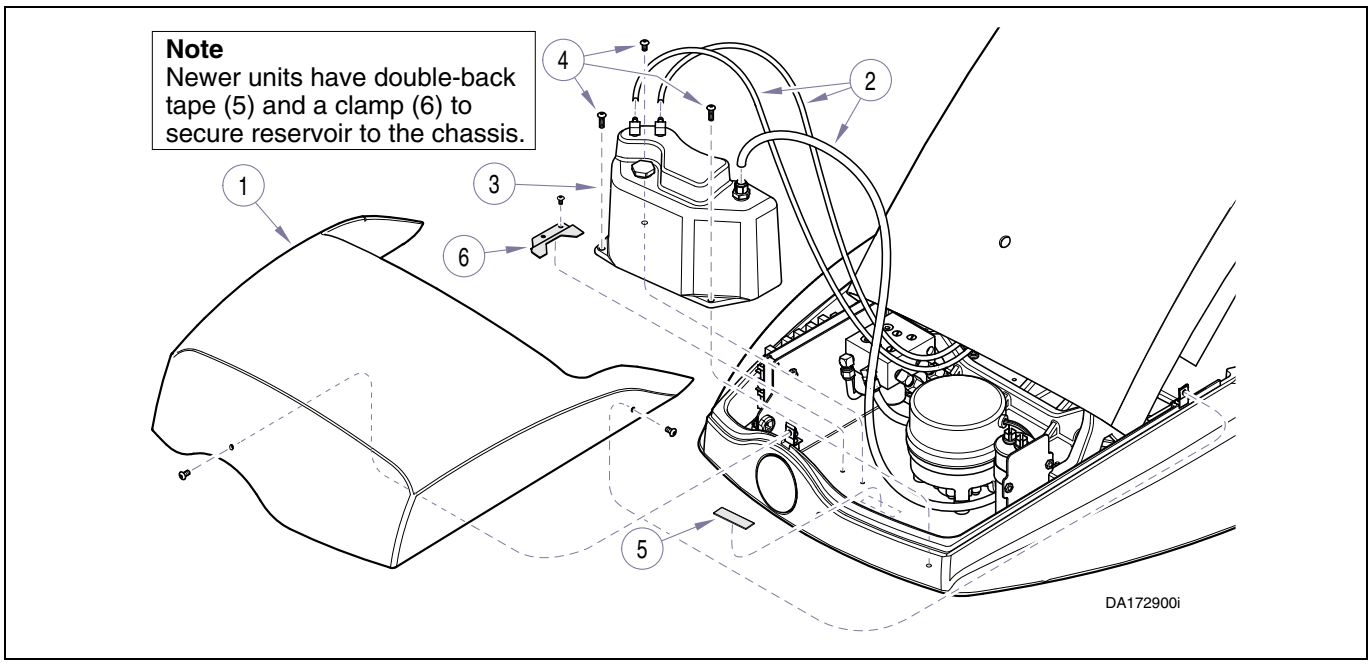

Figure 4-12. Hydraulic Reservoir

(5) Disconnect hydraulic lines (2) from reservoir (3).

NOTE
On newer units, the reservoir is held down by double-back tape (5) and a clamp (6).

(6) Remove mounting screws (4) and reservoir (3) or double-back tape (5) and clamp (6).

B. Installation.

NOTE
On newer units, place the double back tape (5, Fig. 4-12) on the bottom of the reservoir and position the reservoir on the chassis.

(1) Place reservoir (3, Fig. 4-12) in position and secure with mounting screws (4) or clamp (6).

(2) Connect hydraulic lines (2).

(3) Add hydraulic fluid to reservoir until at correct level (refer to para 4.12).

WARNING
Use caution to prevent electrical shock with chair plugged into outlet. Electrical components and connections are exposed.

(4) Plug chair into outlet and run operational test (refer to para 2.1). Check for hydraulic leakage.

(5) Unplug chair and install hydraulic cover.

4.12 Hydraulic Fluid Level

A. Checking / Adding Fluid.

EQUIPMENT ALERT
Use Hydraulic Oil with Viscosity **ISO VG 32**. Chair base and back must be in total down positions when checking reservoir capacity. Hydraulic system capacity is 1 quart (950 ml).

(1) Position chair with base and back completely down and back.

(2) Rotate seat toward patient's right side.

WARNING
Unplug chair power cord before removing covers or working on chair. Failure to comply could result in personal injury.

(3) Unplug chair power cord.

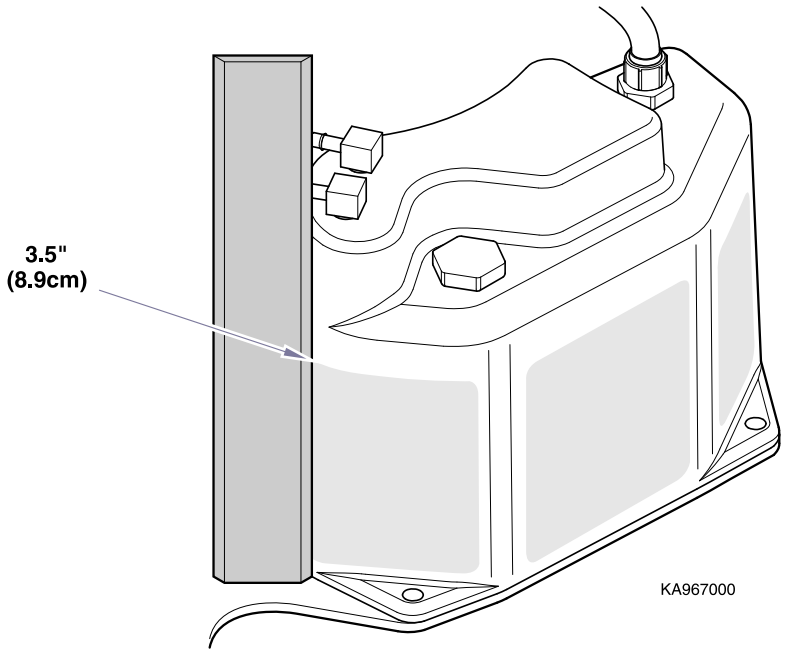

Figure 4-13. Hydraulic Fluid Level

(4) Remove hydraulic cover (refer to para 4.3).

NOTE
When base is completely down and back is totally reclined, hydraulic fluid level in reservoir (Fig. 4-14) should be 3 1/2" (8.9cm) from bottom of reservoir.

(5) Check condition of fluid level in reservoir (Fig. 4-13).

(6) If necessary, remove reservoir cap and fill reservoir to 3 1/2" (8.9cm) from bottom of reservoir, then install cap

WARNING
Use caution to prevent electrical shock with chair plugged into outlet. Electrical components and connections are exposed.

(7) Plug chair into outlet and run operational test (refer to para 2.1), then recheck fluid level.

(8) Unplug chair, install hydraulic cover, and plug chair into outlet.

4.13 Hydraulic Solenoid Valve Assembly.

A. Removal

(1) Rotate seat to one side.

WARNING
Unplug chair power cord before removing covers or working on chair. Failure to comply could result in personal injury.

(2) Unplug chair power cord.

(3) Remove covers (refer to para 4-3).

WARNING
If either or both Base and / or Back sections are elevated, hydraulic pressure will be present in the line(s) between the cylinder(s) and Solenoid Valve Assembly. Pressure must be relieved before working on hydraulic system.

WARNING
Use caution to prevent electrical shock with chair plugged into outlet. Electrical components and connections are exposed.

(4) Remove pressure from an ***operable*** base cylinder:

a.) Plug in chair power cord.

b.) Depress the Base Down directional button on foot or membrane switch until base cylinder is at its lowest level.

c.) Depress and hold down Program button while depressing Base Down directional button lowering base until it stops.

d.) Unplug power cord.

(5) Remove pressure from an ***inoperable*** base cylinder:

EQUIPMENT ALERT
Use care to prevent damage to electrical leads and hydraulic lines when locating jack.

a.) Lift up on chair slightly, using a jack, to take pressure off base cylinder.

NOTE
On chairs that contain delivery head assembly, cuspidor and / or assistant's console it may be necessary to locate the jack stand(s) in some other location. Assure the stands are positioned to securely support the load without damage to chair or accessories.

c.) Place jack stands (1, Fig. 4-14) beneath upper lift casting (2) and lower chair onto stands so no pressure or weight is on base cylinder.

WARNING
Make sure chair top is securely supported before starting to remove hydraulic solenoid valve. Failure to comply could result in chair top collapsing causing serious personal injury.

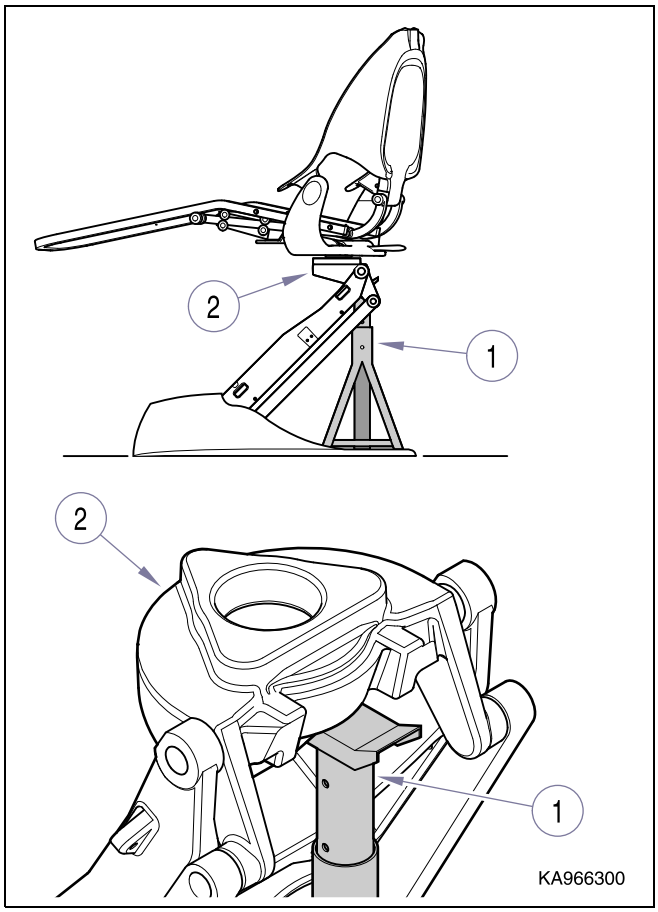

Figure 4-14. Hydraulic Solenoid Valve Assembly.

(6) Remove pressure from an ***operable*** back cylinder:

a.) Plug in chair power cord.

b.) Depress the Back Down directional button on foot or membrane switch until back is all the way down.

c.) Depress and hold down Program button while depressing Back Down directional button lowering back until it stops.

d.) Unplug power cord.

(7) Remove pressure from an ***inoperable*** back cylinder

NOTE
If a solenoid coil is not operable on a solenoid valve, substitute one of the other coils on the valve assembly to operate the valve. The function button for the substituted valve must be used to operate the coil.

a.) Remove solenoid valve assembly (1, Fig.4-15) from mounting bracket (2), two screws.

b.) Remove malfunctioning solenoid coil (3) and substitute known good coil (4).

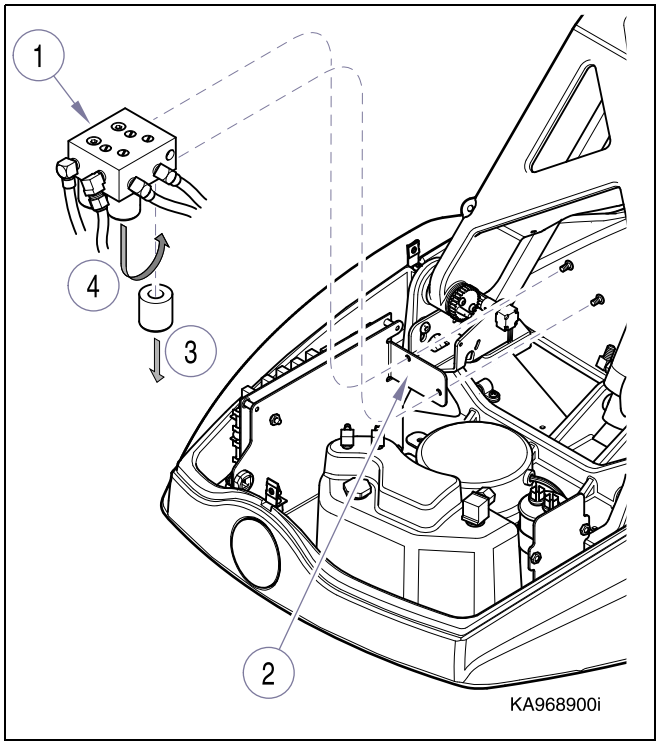

Figure 4-15. Hydraulic Solenoid Valve Assembly.

c.) Plug power cord in and operate function button that is connected to substitute coil and place Back section in lowest position.

d.) Unplug power cord.

NOTE
Place absorbent towel or equivalent beneath hydraulic fittings, valves and lines before disconnecting.

(8) Disconnect hydraulic lines from solenoid valve assembly (1, Fig. 4-16).

(9) Disconnect solenoid electrical leads from J17 and J18 plug connectors on PC board (refer to para 5.1, Schematics).

(10) Remove solenoid valve assembly (1) from hydraulic chassis (2), two screws.

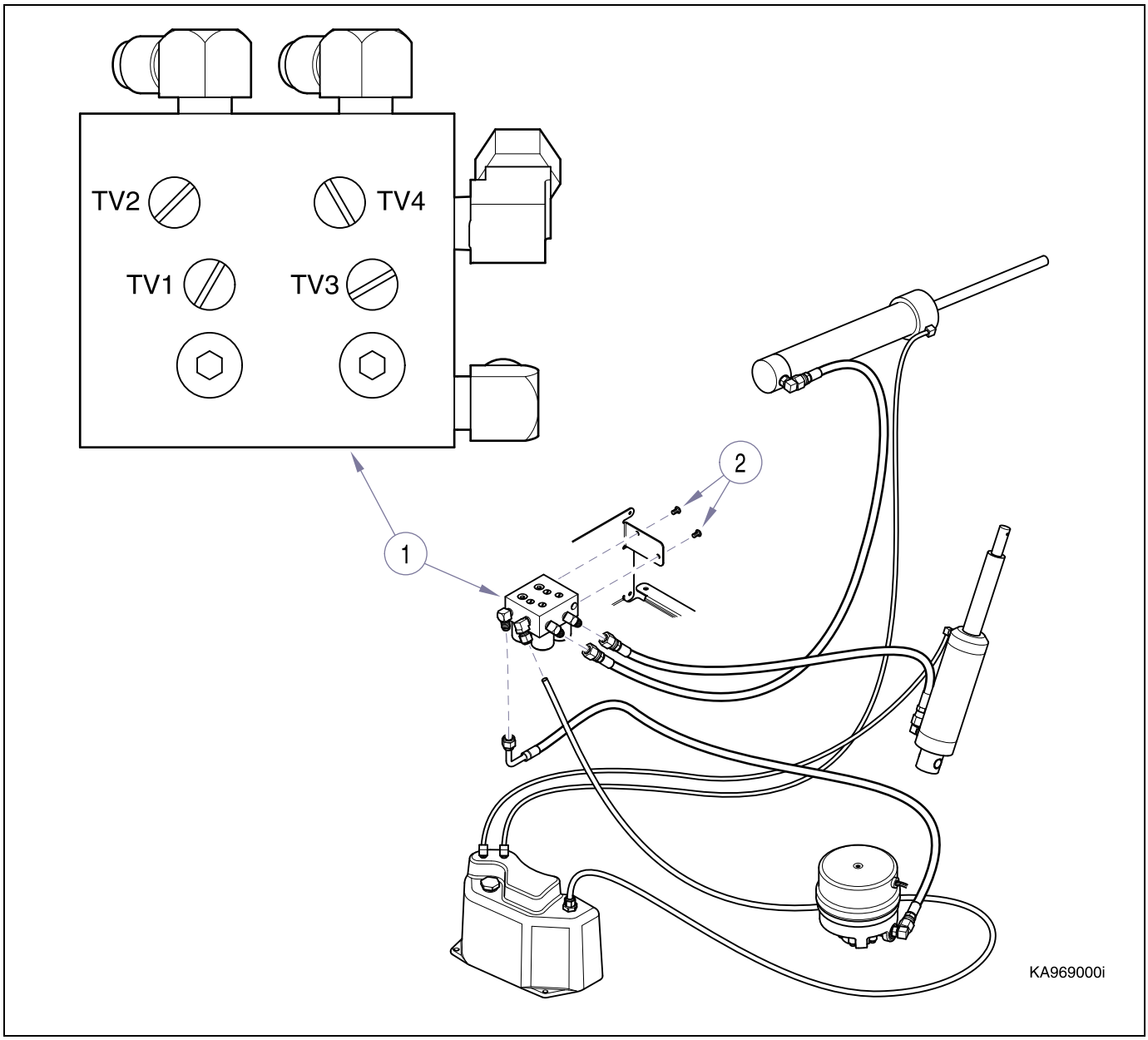

Figure 4-16. Hydraulic Solenoid Valve Assembly.

B. Installation

(1) Connect hydraulic hoses to the proper ports on the solenoid valve assembly (1, Fig. 4-16).

(2) Secure solenoid valve assembly (1) to hydraulic chassis (2), two screws.

NOTE
The plug connectors on the replacement hydraulic valve assembly are identified with the pin connector numbers on the P.C. Board.

(3) Connect the plug connectors to the appropriate pin connectors on the P.C. Board. Refer to para 5.1, Schematics.

WARNING
Use caution to prevent electrical shock with chair plugged into outlet. Electrical components and connections are exposed.

(4) Operate the chair and check for leaks.

(5) Place 180 lbs. (82 kg) on chair and check rate of travel. Travel time from end-point to end-point should be 15 seconds (+/- 1 second).

C. Adjustments

WARNING
Use caution to prevent electrical shock with chair plugged into outlet. Electrical components and connections are exposed.

NOTE
There are four Throttle Valves on the Solenoid Valve Assembly (1, Fig. 4-16) for adjusting travel time, BASE UP (TV1), BASE DOWN (TV2), BACK UP (TV3), BACK DOWN (TV4)

(1) With 180 lbs. (82 kg) on chair, check travel time on all four functions, BASE UP, BASE DOWN, BACK UP, and BACK DOWN.

NOTE
Travel time from end-point to end-point should be 15 seconds (+/- 1 second).

(2) If necessary to adjust the rate of travel of a function, turn that functions Throttle Valve screw all the way in and then back it out 1/2 to 1 turn.

(3) Recheck time and adjust accordingly.

NOTE
Check with customer to assure the rate of travel is acceptable for them.

(4) Unplug chair, install hydraulic cover, and plug chair into outlet.

4.14 Printed Circuit (P.C.) Board

A. Removal

(1) Rotate seat toward patient's left side.

WARNING
Unplug chair power cord before removing covers or working on chair. Failure to comply could result in personal injury.

(2) Unplug chair power cord.

(3) Remove hydraulic cover (refer to para 4.3).

EQUIPMENT ALERT
Before working on or handling printed circuit boards take precautions to prevent any static discharge that would damage board components.

(4) Tag then disconnect plug connectors from P.C. Board (1, Fig. 4-17).

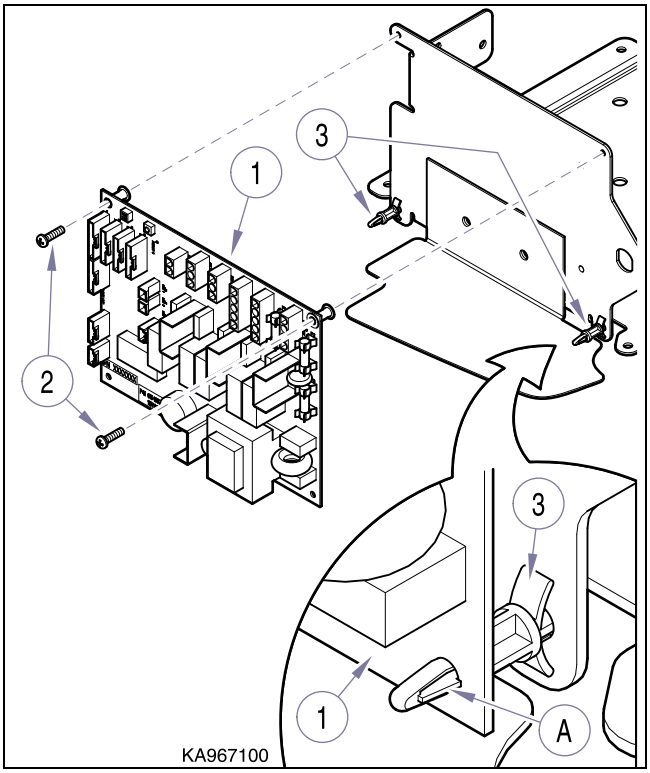

Figure 4-17. Printed Circuit Board.

(5) Remove two mounting screws (2) at top of p.c. board.

(6) While depressing ear (A) on lower mount(s) (3), pull outward on p.c. board to release it from mount(s) (3), and remove p.c. board (1).

NOTE
When sending P.C. Board back to factory, place in static bag that new P.C. Board was shipped in.

B. Installation

(1) Install p.c. board (1, Fig. 4-17) on lower mounts (3), pushing inward until it snaps in place.

(2) Install top mounting screws (3).

(3) Install plug connectors on p.c. board (refer to para 5.1 for connector layout).

WARNING
Use caution to prevent electrical shock with chair plugged into outlet. Electrical components and connections are exposed.

(4) Plug chair into outlet, place both switches on SW1 to *ON* position and run a Calibration Mode (refer to Section 5, SW1 Switch Settings).

(5) After Calibration is completed, place SW1 switches to previous settings and run various functions to check operation.

(6) Unplug chair and install cover, then plug chair back into outlet.

4.15 Fuses (P.C. Board)

A. Replacement

WARNING
Unplug chair power cord before removing covers or working on chair. Failure to comply could result in personal injury.

(1) Unplug chair power cord.

(2) Rotate seat toward patient's left side.

(3) Remove hydraulic cover (refer to para 4-3).

EQUIPMENT ALERT
Before working on or handling printed circuit boards take precautions to prevent any static discharge that would damage board components.

(4) Remove fuse(s) (1, Fig. 4-18) from the P.C. board (2).

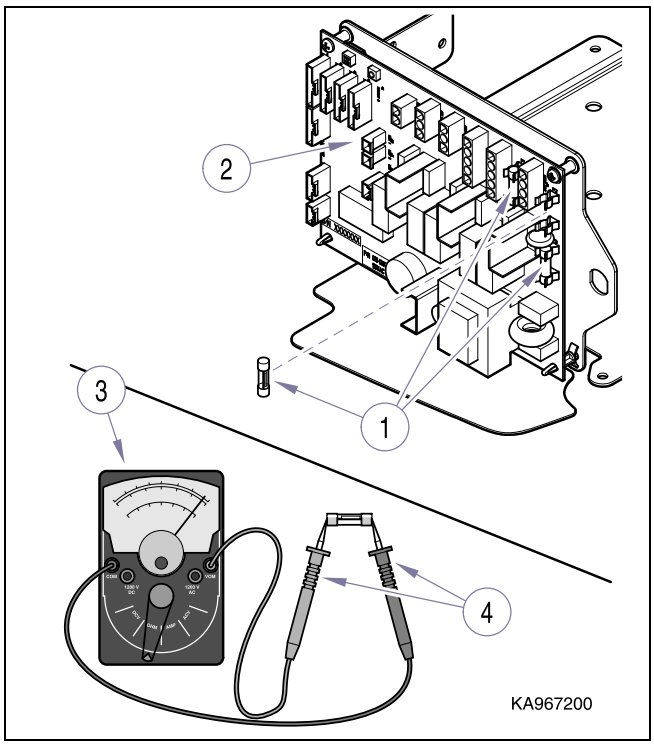

Figure 4-18. Fuse (P.C. Board)

(5) Place fuse(s) (1) on a non-conductive material and check fuse(s):

a.) Place VOM (3) on Resistance (R x 1) scale.

b.) Place meter leads (4) on each end of fuse.

c.) Meter should read "0" ohms. If meter reads "OL" or other then "0" replace fuse.

EQUIPMENT ALERT
Replace fuse(s) with same rating only or damage to the p.c. board and chair could occur. (refer to para 1.4 or 5.1 for fuse specifications).

(6) Install hydraulic cover.

(7) Plug chair into outlet and check operation.

4.16 Base Potentiometer

A. Removal.

NOTE
If necessary, base positioning potentiometer (1, Fig. 4-19) can be over-ridden in order to operate Base section.
While holding down ***Program*** button on membrane or foot switch, press desired ***Base*** directional button.

WARNING
Unplug chair power cord before removing covers or working on chair. Failure to comply could result in personal injury.

(1) After positioning chair, unplug chair power cord and remove covers (refer to para 4.3).

WARNING
Use caution to prevent electrical shock with chair plugged into outlet. Electrical components and connections are exposed.

(2) Disconnect plug connector (2, Fig. 4-19) from base positioning potentiometer (1).

(3) Remove lower sensor bracket (3) and potentiometer (1), two screws.

(4) Loosen screw, and remove pinion gear (4) from shaft of potentiometer (1).

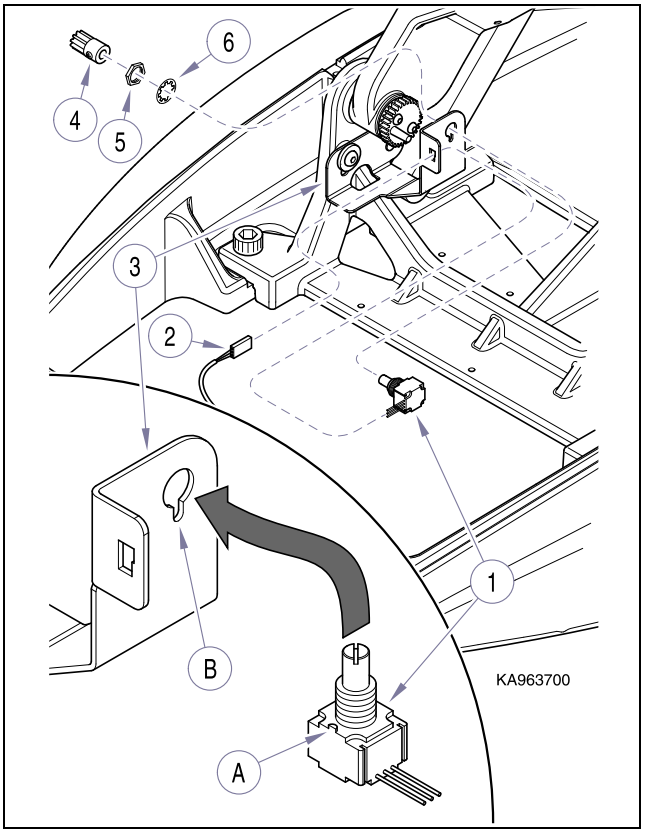

Figure 4-19. Base Potentiometer

(5) Remove mounting nut (5), lockwasher (6), and potentiometer (1) from lower sensor bracket (3).

B. Installation

> **EQUIPMENT ALERT**
> Do not over-tighten nut when mounting potentiometer to lower sensor bracket or potentiometer could be damaged.

> **NOTE**
> Locator notch (A) on potentiometer (1, Fig. 4-19) fits into cut-out (B) of lower sensor bracket (3).

(1) Secure potentiometer (1, Fig. 4-19) to lower sensor bracket (3) with lockwasher (6) and mounting nut (5).

(2) Install pinion gear (4) onto shaft of potentiometer (1) and secure with screw.

(3) Position bracket (3) and potentiometer (1) onto chair and secure with mounting screws.

(4) Connect plug connector (2) to potentiometer(1).

C. Adjustment

> **NOTE**
> Place chair at its **lowest position** before perfoming adjustment procedures.

(1) Loosen mounting screws on lower sensor bracket (1, Fig. 4-20) and rotate bracket so pinion gear (2) is disengaged from drive gear (3).

(2) Rotate pinion gear (2) on potentiometer shaft ***counter-clockwise*** (A), viewed from back of potentiometer, until it stops, aligning teeth on pinion with teeth on drive gear (3)

(3) Turn the pinion gear (2) ***back***, ***(clockwise)*** two teeth and align with drive gear (3).

(4) Tighten mounting screws.

(5) Place SW1 switches (4), on P.C. board, both in **ON** position.

(6) Press Calibration button (5).

> **NOTE**
> Chair automatically completes two cycles during Calibration.
> First cycle finds the extreme end of travel sensor settings.
> Second cycle checks to assure settings have been stored and can be recalled by software.

(7) Place SW1 switches (4) to OFF position and check Base Up and Base Down positions using directional buttons on foot or membrane switch.

> **NOTE**
> Base Up and Down positions should almost reach maximum travel. If necessary, readjust potentiometer.

(8) Place SW1 switches (4) to desired operating position (refer to para 5.1).

(9) Install cover (refer to para 4.3).

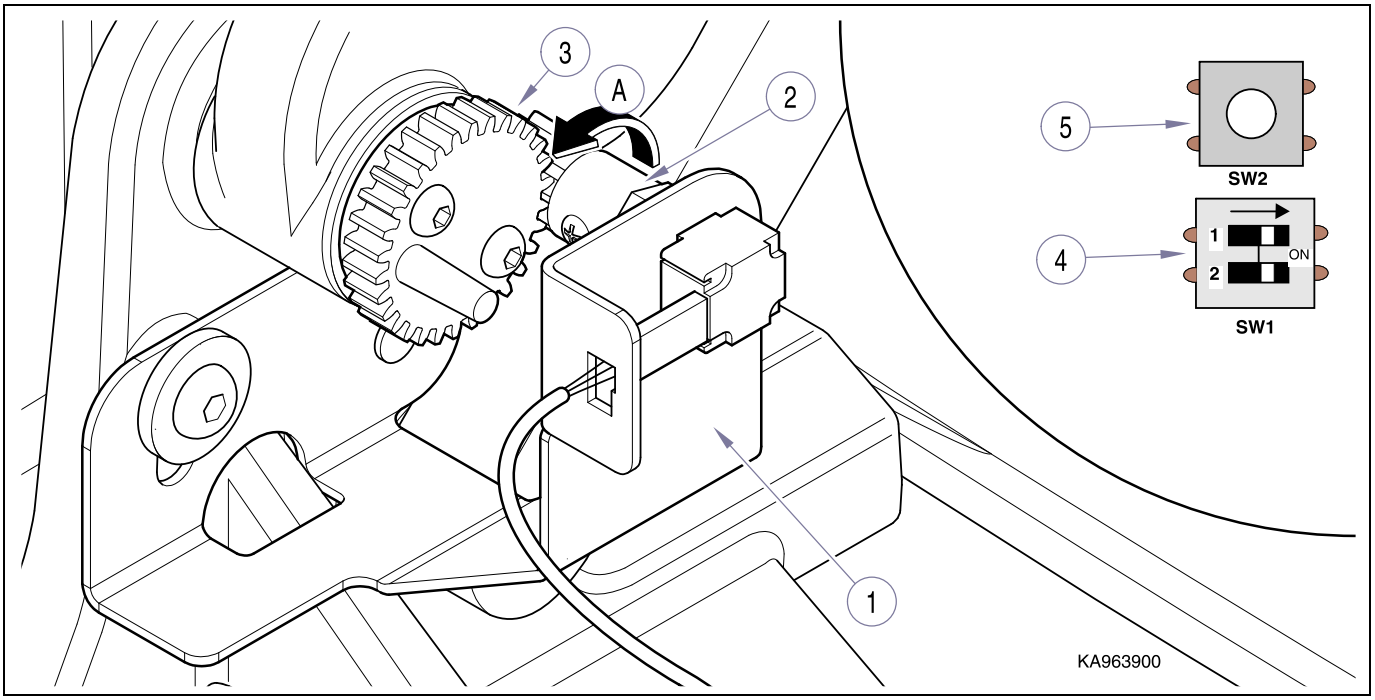

Figure 4-20. Base Potentiometer.

4.17 Back Potentiometer

(Pertains only to chairs with serial numbers NT1000 to NT1598, and NZ1000 to NZ1019).

A. Removal

(1) Remove seat upholstery (refer to para 4.2).

> **NOTE**
> If necessary, back positioning potentiometer (1, Fig. 4-21) can be over-ridden in order to operate Back section.
> While holding down ***Program*** button on membrane or foot switch, press ***Back Down*** directional button.

(2) Place chair back in full Back Down position and disconnect lift spring (2, Fig. 4-21) on patient's right side.

> **WARNING**
> **Unplug chair power cord before removing covers or working on chair. Failure to comply could result in personal injury.**

(3) Unplug chair power cord and remove hydraulic cover (refer to para 4.3).

(4) Remove sensor dog (3), two screws.

(5) Disconnect plug connector (4) from back positioning potentiometer (1).

(6) Remove back sensor bracket (5) with potentiometer (1) and sensor shaft (6).

(7) Disconnect sensor shaft (6) from rubber coupling (7) then remove coupling from potentiometer (1).

(8) Remove mounting nut (8), lockwasher (9), and potentiometer (1) from back sensor bracket (5).

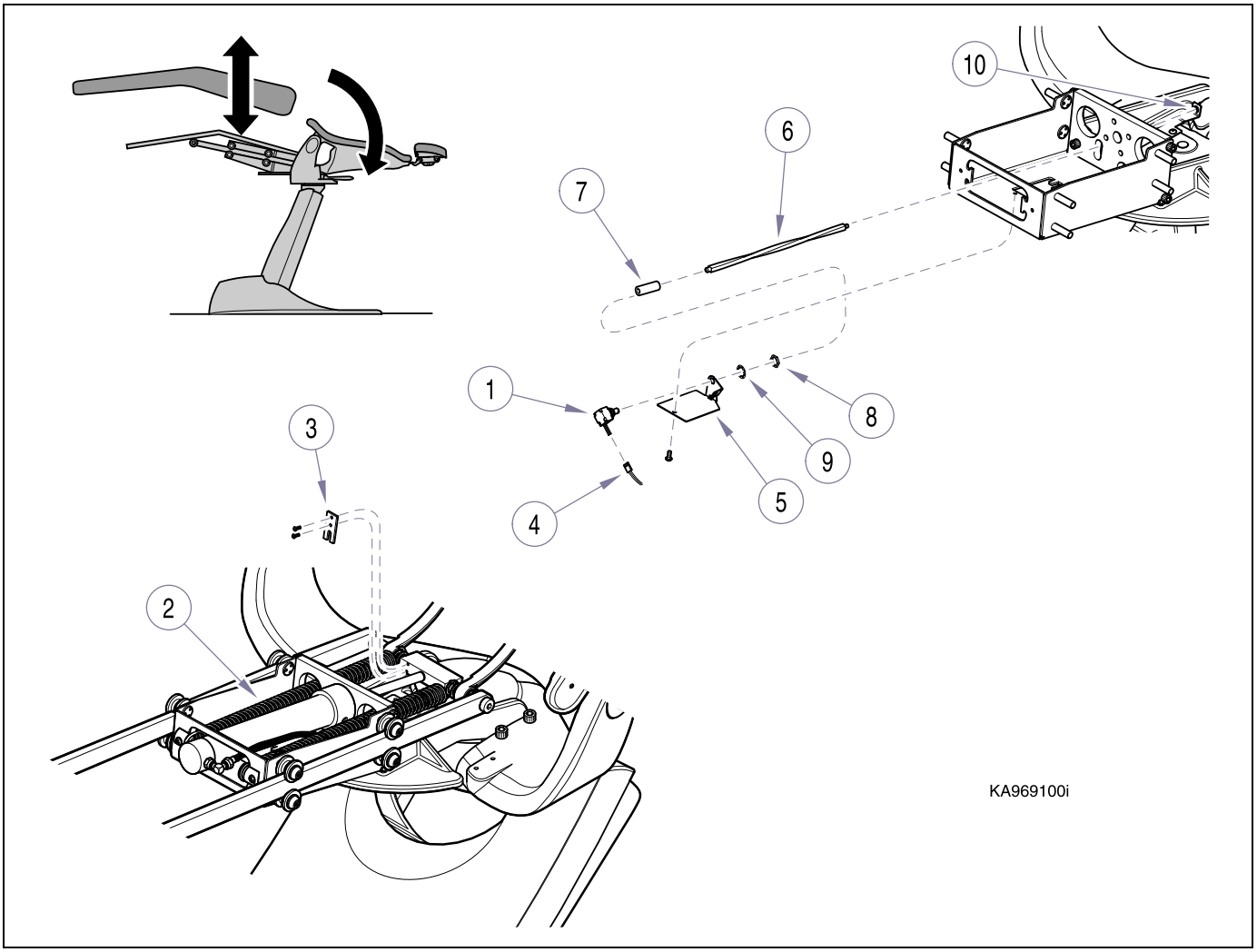

Figure 4-21. Back Potentiometer.

B. Installation

> **EQUIPMENT ALERT**
> Do not over-tighten nut when mounting potentiometer to back sensor bracket or potentiometer could be damaged.

(1) Secure potentiometer (1, Fig. 4-21) to back sensor bracket (5) with lockwasher (9) and mounting nut (8).

> **NOTE**
> Larger diameter end of sensor shaft (6) connects to rubber coupling (7).

(2) Insert rubber coupling (7) onto shaft of potentiometer (1) and connect sensor shaft (6).

(3) Install plug connector (4) to potentiometer (1).

(4) Install potentiometer (1) and sensor shaft (6) on chair, inserting small end of shaft into outboard bracket (10).

(5) Secure back sensor bracket (5) with screw and install lift spring (2).

C. Adjustment

WARNING
Use caution to prevent electrical shock with chair plugged into outlet. Electrical components and connections are exposed.

(1) Plug chair power cord into outlet.

(2) While holding down Program button on membrane or foot switch, press Back Up directional button, raising back to full up position.

(3) Rotate sensor shaft (1, Fig. 4-22) Fully Clockwise (A) until it stops, then continue to turn it until the corner (B) of the shaft is facing upward.

(4) Turn sensor shaft (1) counter-clockwise (C) to the first flat surface (D) and install sensor dog (2), two screws.

(5) Place SW1 switches (3) both in ON position.

(6) Press Calibration button (4).

NOTE
Chair automatically completes two cycles during Calibration.
First cycle finds the extreme end of travel sensor settings.
Second cycle checks to assure settings have been stored and can be recalled by software.

(7) Place SW1 switches (3) to OFF position and check Back Up and Back Down positions using directional buttons on foot or membrane switch.

NOTE
Back Up and Down positions should almost reach maximum travel. If necessary,readjust potentiometer.

(8) Place SW1 switches (3) to desired operating position (refer to para 5.1).

(9) Install hydraulic cover (refer to para 4.3).

(10) Install seat upholstery (refer to para 4.2)

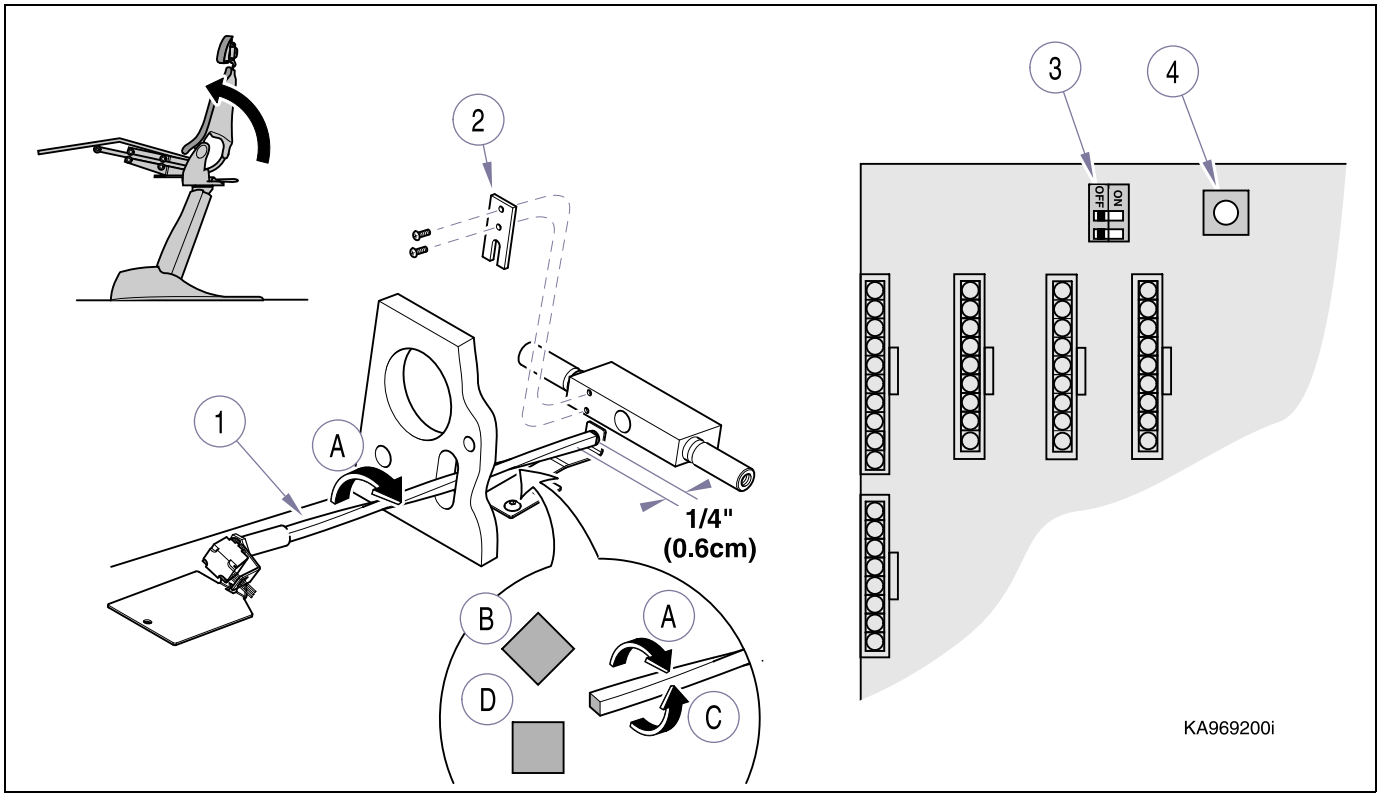

Figure 4-22. Back Potentiometer.

4.18 Back Potentiometer

(Pertains to chairs with serial numbers NT1599 to Present and NZ1020 to Present.)

A. Removal

(1) Remove seat upholstery (refer to para 4.2).

> **NOTE**
> If necessary, back positioning potentiometer (1, Fig. 4-23) can be over-ridden in order to operate Back section.
> While holding down ***Program*** button on membrane or foot switch, press ***Back Down*** directional button.

(2) Place chair back in full Back Down position.

> **WARNING**
> **Unplug chair power cord before removing covers or working on chair. Failure to comply could result in personal injury.**

(3) Unplug chair power cord, disconnect lift spring (2, Fig. 4-23) on patient's right side and remove hydraulic cover (refer to para 4.3).

(4) Remove gear rack (3), two screws.

(5) Cut wire tie (4) and disconnect wire harness plugs (5).

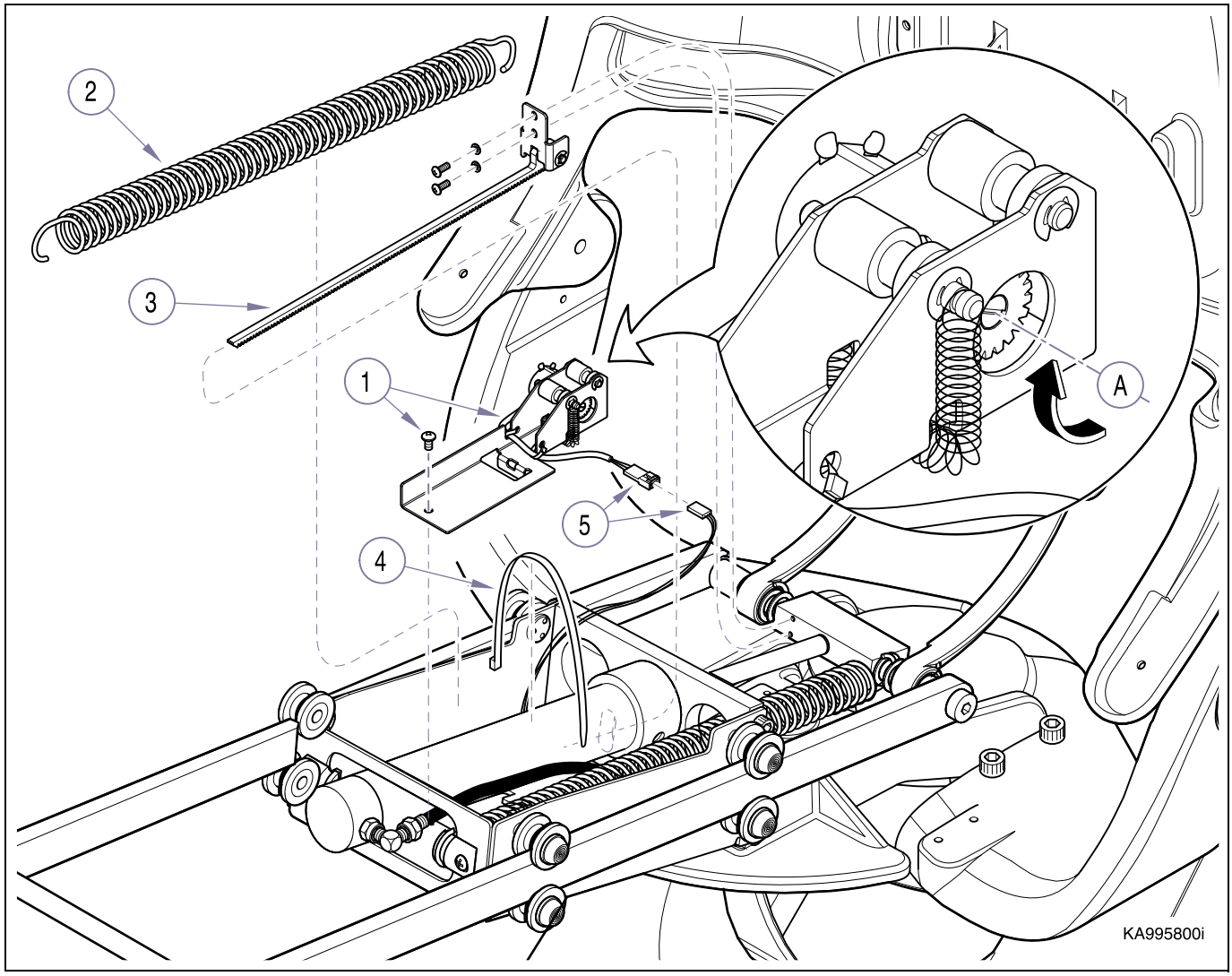

Figure 4-23. Back Potentiometer

(6) Remove potentiometer assembly (1), one screw.

B. Installation

(1) Connect chair to supply power. While holding down the ***Program*** button on membrane or foot switch press ***Back Up*** switch and raise back all the way Up to its mechanical stop position.

WARNING
Assure power is disconnected from chair before attempting to work on unit.

(2) Disconnect power supply to chair.

(3) Install potentiometer assembly (1, Figure 4-23).

(4) Connect wire harness plugs (5) and secure hydraulic hoses and wire to seat cylinder with wire tie (4).

(5) Rotate (A) potentiometer spur gear (see arrow) until it stops at end of travel.

NOTE
Assure chair back is positioned all the way *Up*, to *mechanical stop* position, before inserting gear rack. When gear rack is inserted potentiometer will be adjusted to correct travel.

(6) Insert gear rack (3) through access hole of face plate on hydro-glide assembly, engaging gears on rack with spur gear (A) on potentiometer assembly (1).

(7) Secure gear rack (3) to yoke block, two screws.

(8) Connect right hand (patient's) lift spring.

WARNING
Use caution to prevent electrical shock with chair plugged into outlet. Electrical components and connections are exposed.

(9) Plug chair into outlet, place both switches on SW1 to *ON* position and run a Calibration Mode (refer to Section 5, SW1 Switch Settings).

(10) After Calibration is completed, place SW1 switches to previous settings and run various functions to check operation.

(11) Unplug chair and install cover, then plug chair back into outlet.

4.19 Safety Bail Limit Switch

A. Removal

WARNING
Unplug chair power cord before removing covers or working on chair. Failure to comply could result in personal injury.

(1) Unplug chair power cord.

(2) Remove covers (refer to para. 4.3).

(3) Disconnect wire harness (1, Fig. 4-24).

(4) Remove two screws (1), plate (2), and safety bail limit switch (3) from mounting bracket (4).

B. Installation

(1) Place limit switch (4, Fig. 4-24) on mounting bracket (4) and secure with plate (2).

(2) Attach wire harness (5) as shown.

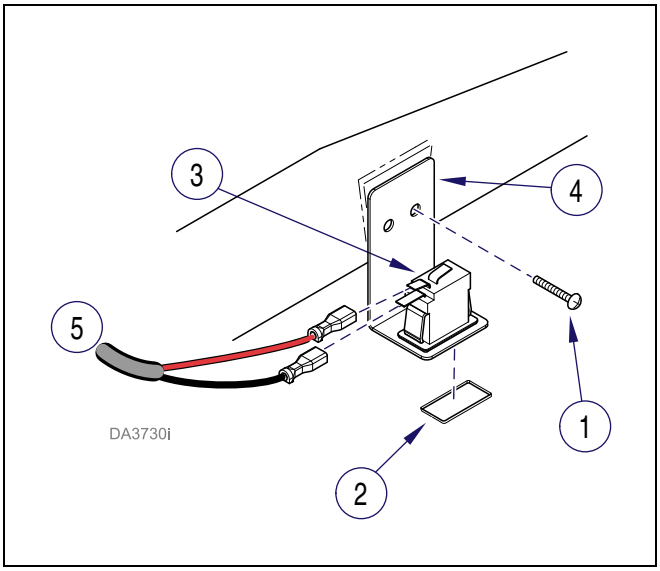

Figure 4-24. Safety Bail Limit Switch.

(3) Install covers (refer to para 4.3).

(4) Connect chair to power source and check operation.

WARNING
When bottom cover contacts an object, causing cover to operate limit switch(es), chair movement should stop. When obstacle is removed, and function button pressed, chair movement should continue.

4.20 Hydroglide Assembly

A. Removal.

(1) Place chair back in complete down position.

WARNING
Unplug chair power cord before removing covers or working on chair. Failure to comply could result in personal injury.

(2) Unplug chair power cord.

(3) Remove upholstery (refer to para 4.2).

(4) Swing chair seat frame (1, Fig. 4-25) up.

NOTE
Push nuts (2) will be damaged during removal requiring new ones. If chair seat rollers (3) are not damaged, it is not necessary to remove them in order to remove wheel halves. (Continue to Step 6.)

(5) Remove push nuts (2) and chair seat rollers (3) from roller shaft (4). Inspect and replace if necessary

(6) Disconnect back springs (5) from foot-end of chassis.

(7) Remove shoulder bolts (6) and pull lift bars and roller shaft assembly (7) from hydroglide frame assembly (8).

(8) Remove push nut (9) and wheel halves (10). Inspect and replace if necessary.

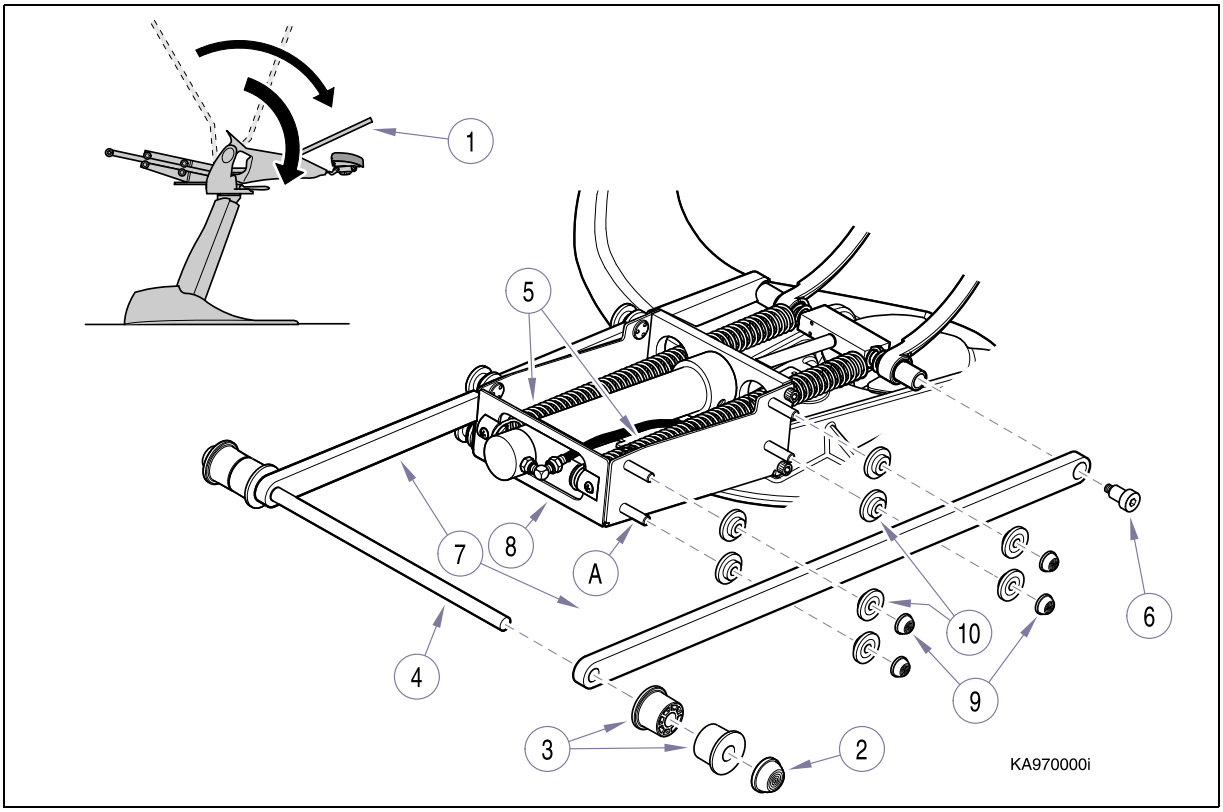

Figure 4-25. Hydroglide Assembly.

B. Installation

EQUIPMENT ALERT
Remove any nicks or burrs from roller shaft and pins on hydroglide frame assembly before installing rollers and wheel halves.

(1) Place a light coating of silicon on hydroglide pins (A, Fig. 4-24). Install wheel halves (10) and push nuts (9).

(2) Place a light coating of silicon on ends of roller shaft (4). Install chairseat rollers (3) and push nuts (2).

(3) Insert lift bars and roller shaft assembly (7) between wheel halves (10) of hydroglide frame assembly (8).

EQUIPMENT ALERT
Place a small drop of non-permanent thread-lock on threads of shoulder bolts before installation.

(4) Install shoulder bolts (6).

(5) Lower chairseat frame (1).

(6) Install seat upholstery (refer to para 4.3).

(7) Plug chair into outlet and check operation.

4.21 Foot Switch Control

NOTE
Only component on foot switch control that can be replaced is the cord.

A. Removal

(1) Using BASE UP button (A, Fig. 26) on touchpad (1), raise chair up.

WARNING
Unplug chair power cord before removing covers or working on chair. Failure to comply could result in personal injury.

(2) Unplug power cord then remove three screws (2) and hydraulic cover (3).

(3) Disconnect foot switch control cable (4) from J1 connector (B) on p.c. board (5).

NOTE
Mark position of strain relief bushing (6) before removing from cable (4) for later help in reassembly.

(4) Remove restraint bracket (7), from chair base and then remove cable (4) from bracket and strain relief bushing (6).

(5) Remove bottom plate (1, Fig. 4-27), on foot-switch control.

(6) Disconnect cable (2) from foot switch connector (3) and remove cable.

B. Installation

(1) Connect cable (2, Fig. 4-27) to foot switch connector (3).

EQUIPMENT ALERT
Cable must be routed in channel (A) of foot switch casting to prevent stress on connector during use.

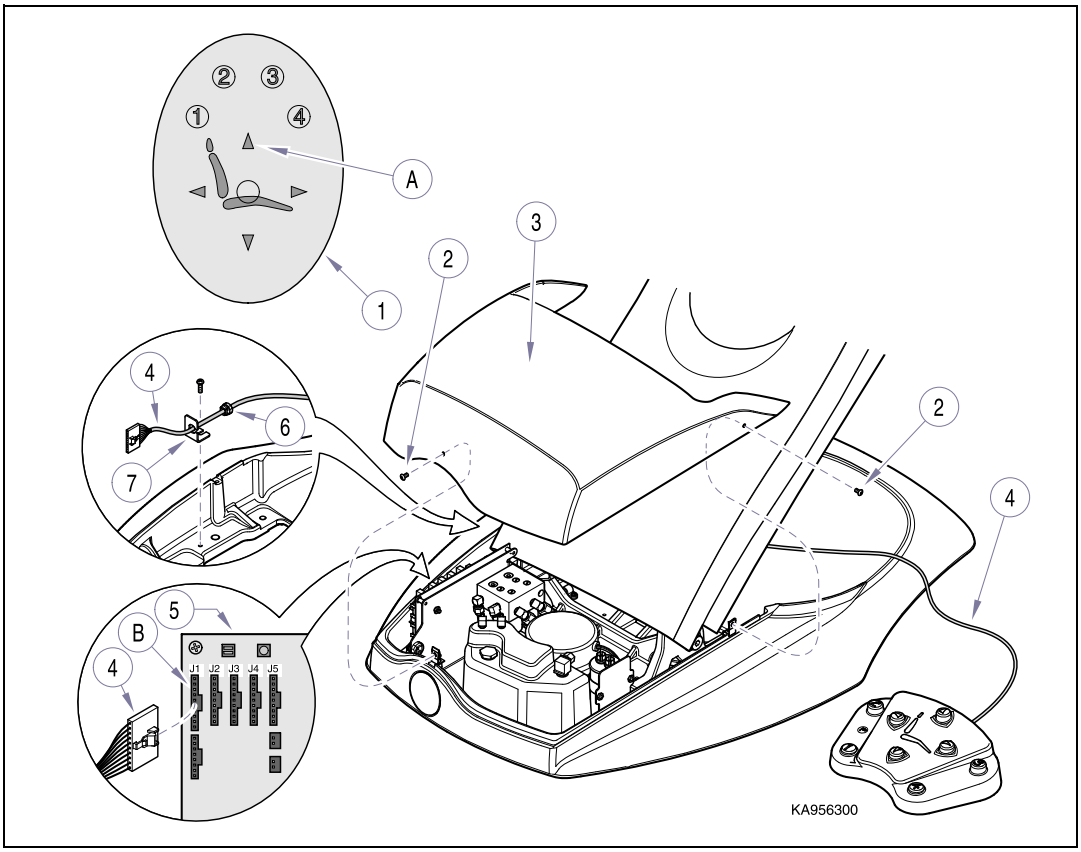

Figure 4-26. Foot Switch Control

(2) Route cable (2) in channel (A) of foot switch casting and install bottom plate (1).

> **NOTE**
> Using mark on old cable as measurement, place a mark on replacement cable to show location of strain relief bushing.

(3) Install strain relief bushing (6, Fig. 4-26) on to cable (4) and insert cable and strain relief bushing thru hole in restraint bracket (7).

(4) Install restraint bracket (7) on chair base.

(5) Plug cable (4) into J1 connector (2) on p.c. board.

(6) Install hydraulic cover (refer to para 4.3).

(7) Plug chair into outlet and check operation.

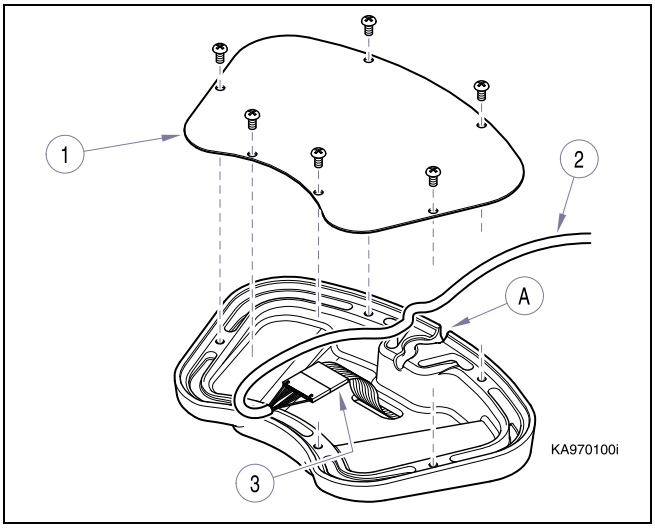

Figure 4-27. Foot Switch Control

4.22 Manual Override of Chair Positioning

CAUTION
This procedure is to be performed by the operator only if a chair malfunctions, with a patient still on chair in a raised or reclined position, to allow for safe patient exit from chair. After patient exit from chair, discontinue use of chair until chair has been properly repaired.

A. Operation

(1) Using touchpad (1, Figure 4-28) or foot control (2), depress and hold PROGRAM button (A) and then depress desired manual positioning button(s)(B)(CHAIR BACK DOWN, CHAIR BACK UP, CHAIR SEAT DOWN, or CHAIR BACK UP) until desired position is acheived.

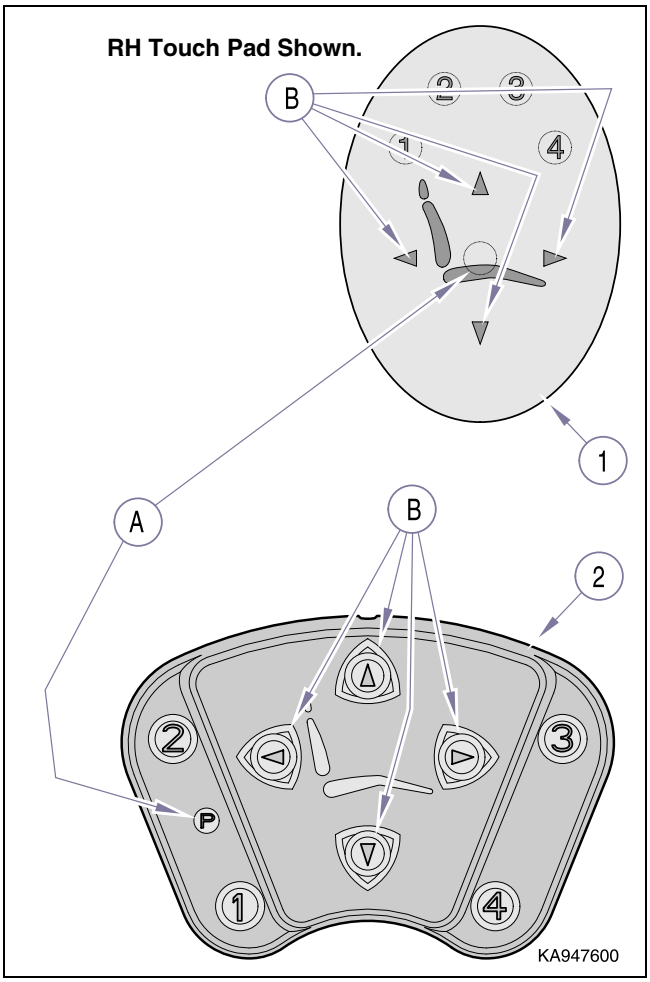

Figure 4-28. Manual Override

SECTION V
SCHEMATICS AND DIAGRAMS

5.1 Electrical Schematics / Wiring Diagrams / Hydraulic Flow Diagrams.

Figure 5-1, 5-2 (115 VAC) or 5-3, 5-4 (230 VAC) illustrates components of P.C. Board and related circuitry. Figure 5-5 thru 5-9 illustrates different settings for SW1 dip switch on P.C. Board.

Figure 5-10 shows circuitry of Foot and Membrane pendants and connectors. Figure 5-11 is wiring for J-box. Figure 5- 12 is wiring for Console and Accessories. Figure 5-13 thru 5-16 are flow diagrams of each hydraulic function.

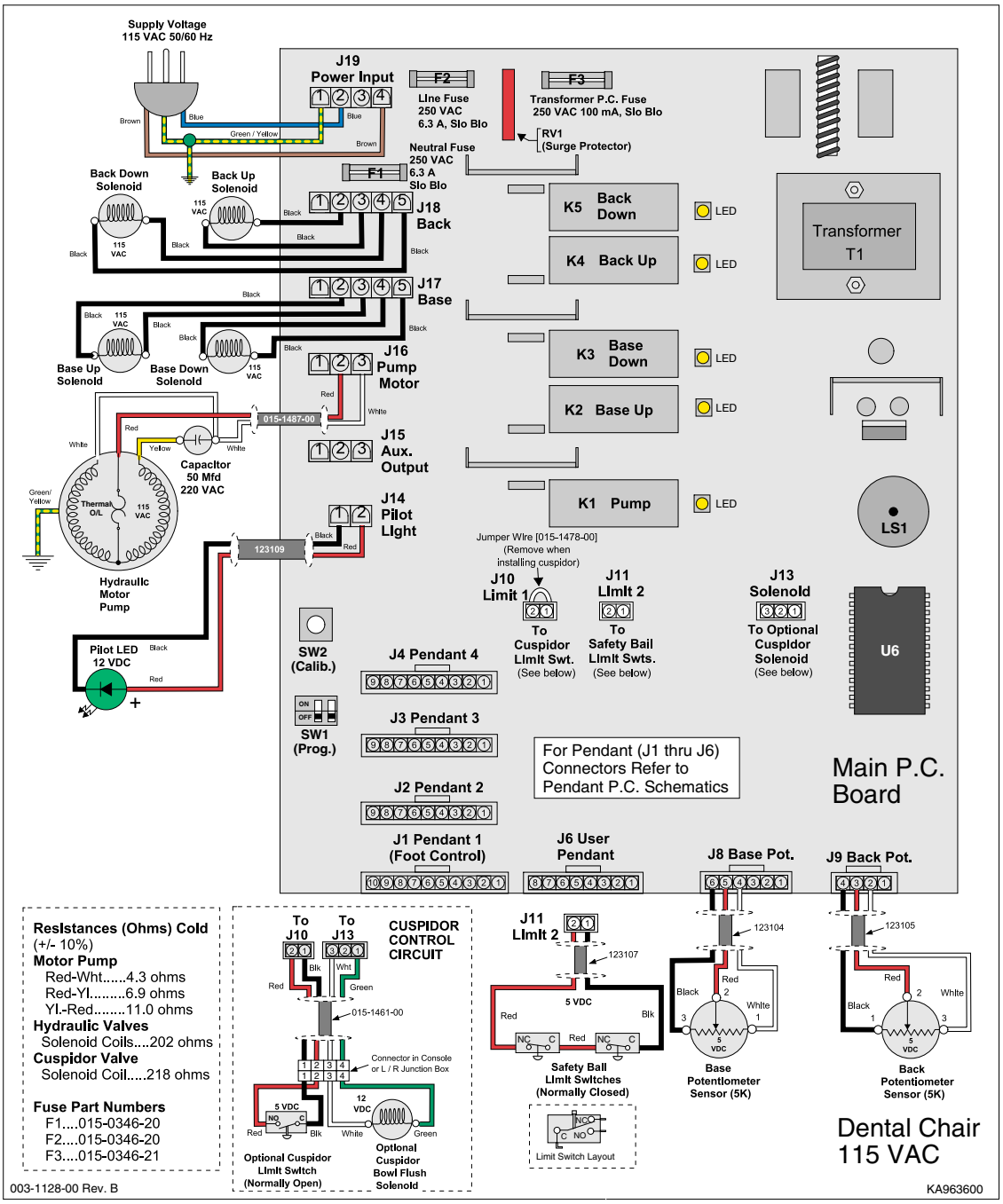

Fig. 5-1. 115 VAC PC Board and Related Circuitry (Used on Serial Numbers NT1000 thru NT1598).

SECTION V
SCHEMATICS AND DIAGRAMS

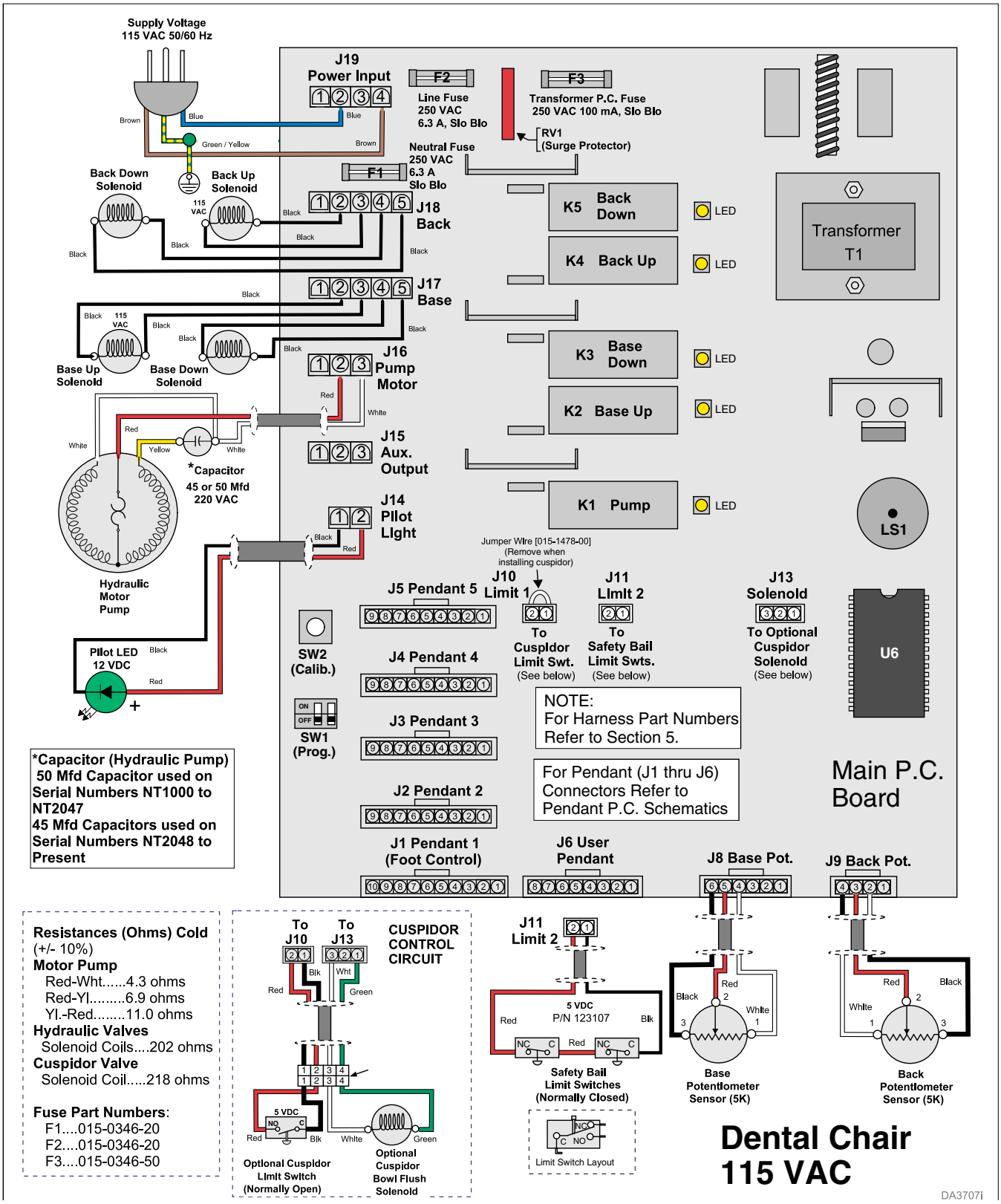

Fig. 5-2. 115 VAC PC Board and Related Circuitry (Used on Serial Numbers NT1599 thru V1314209

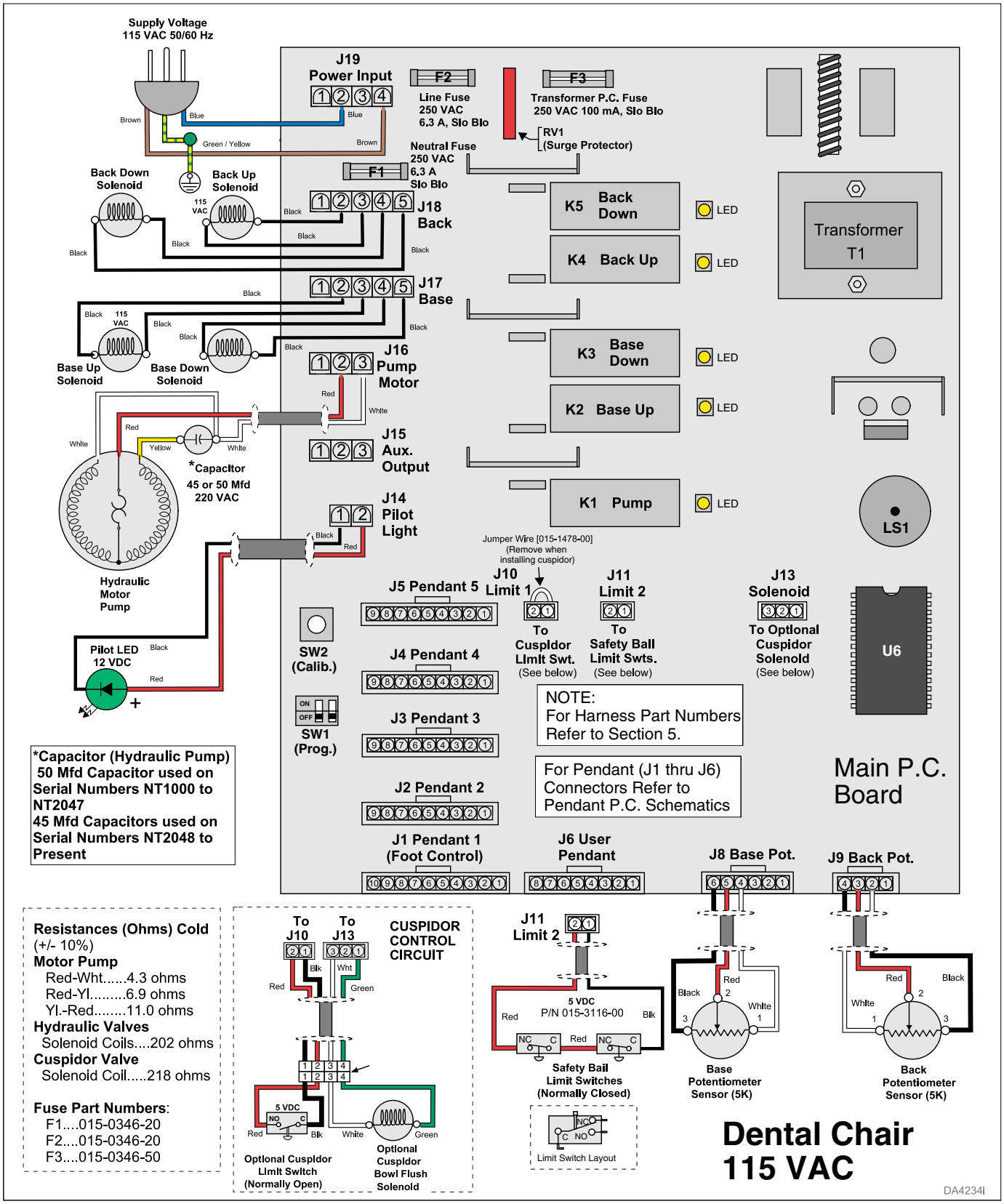

Fig. 5-3. 115 VAC PC Board and Related Circuitry (Used on Serial Numbers V1314210 to present

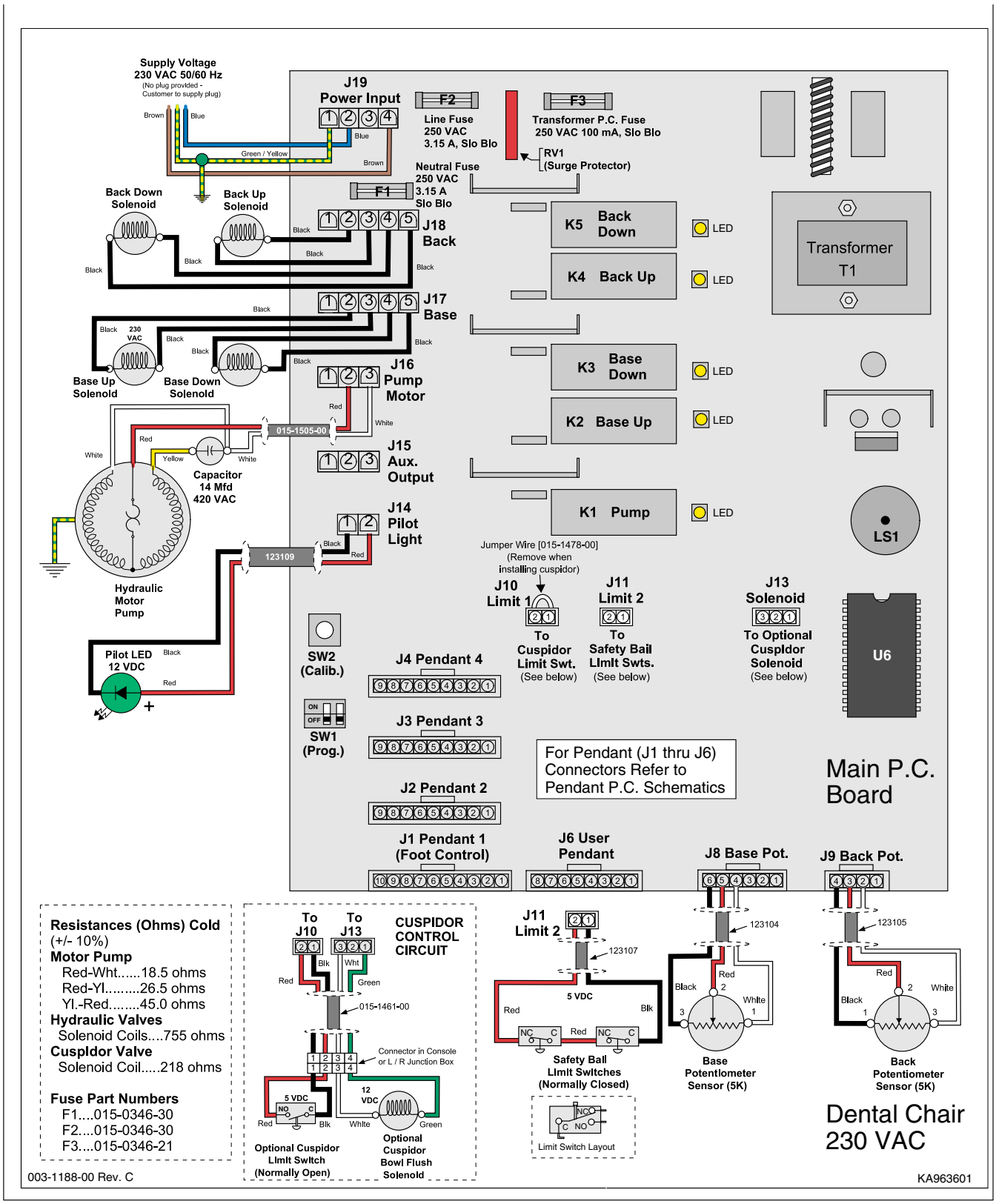

Fig. 5-4. 230 VAC PC Board and Related Circuitry (Used on Serial Numbers NZ1000 thru NZ1019)

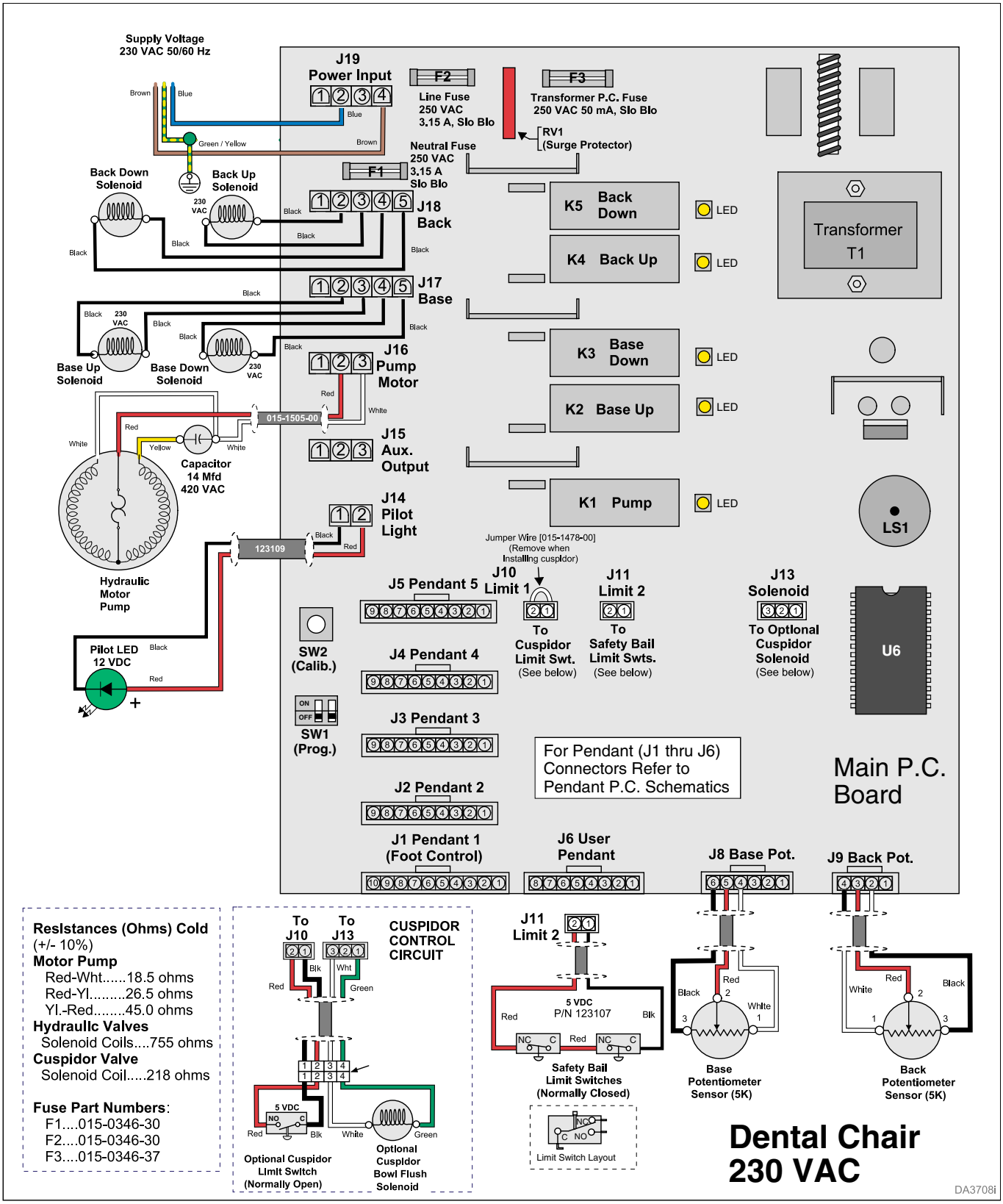

Fig. 5-5. 230 VAC PC Board and Related Circuitry (Used on Serial Numbers NZ1020 thru V1314209)

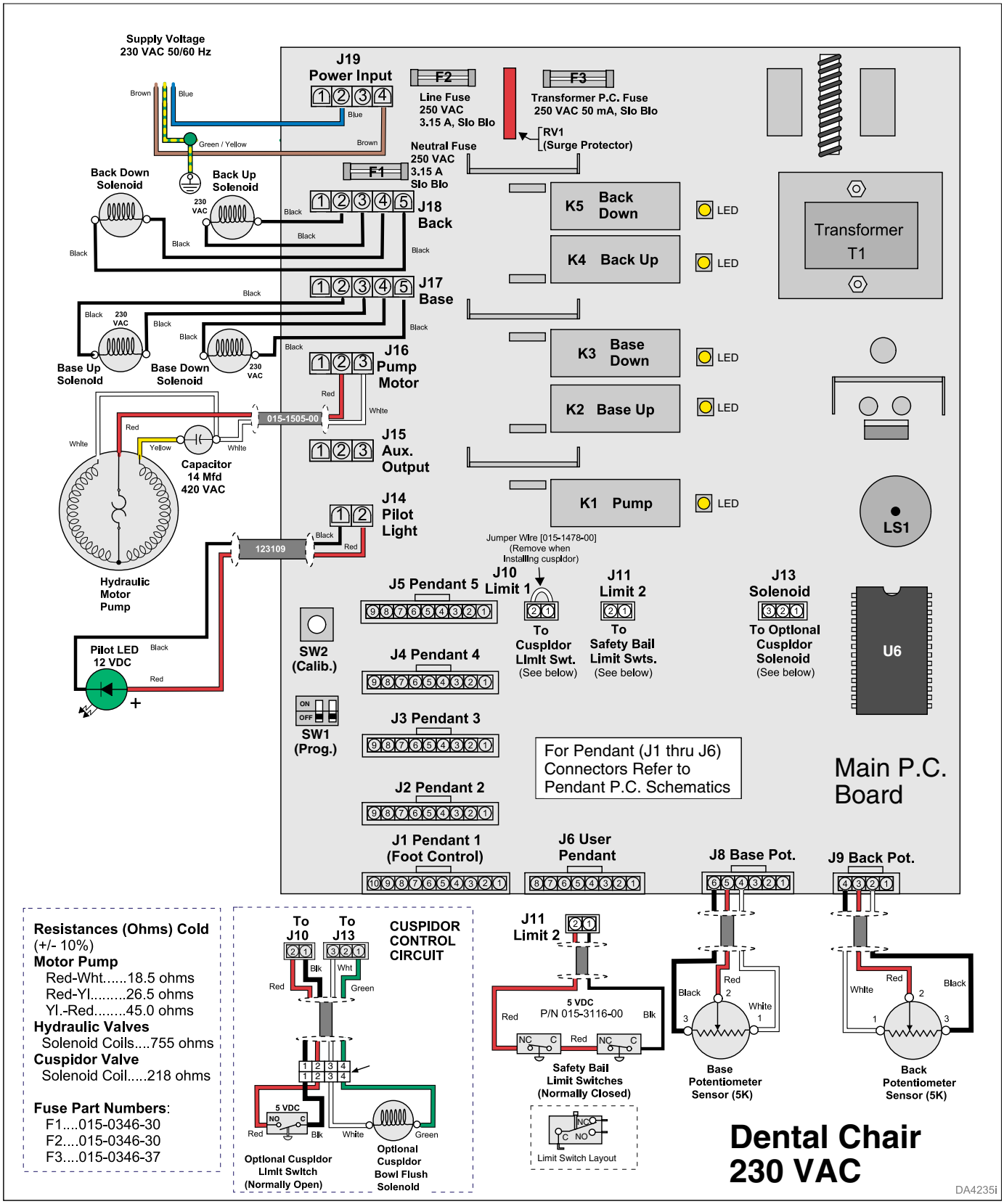

Fig. 5-6. 230 VAC PC Board and Related Circuitry
(Used on Serial Numbers V1314210 to present

SW1 Switch Settings

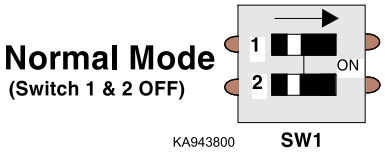

Figure 5-5. SW1 Switch (Normal)

In **Normal Mode** (Fig. 5-5) all directional buttons function normally. Programmable position buttons, 1 thru 4, (Fig. 5-6) can be programmed for four different positions.

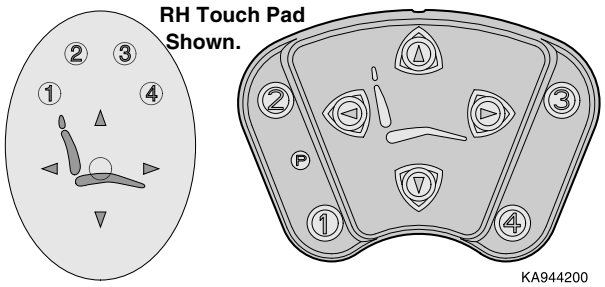

Figure 5-6. Operator Controls

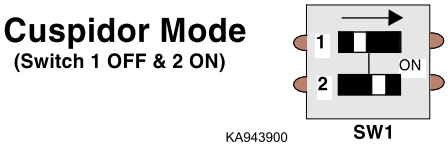

Figure 5-7. SW1 Switch (Cuspidor)

Cuspidor Position Return Mode (Fig. 5-7), allows operator to program a stored position on button 4 (Fig. 5-6) for a patient cuspidor position.
Pressing button 4 not only moves chair into position for patient to use cuspidor but also activates cuspidor solenoid output on chair p.c. board.
Output, (J13 on p.c. board), can be attached to an optional cuspidor solenoid for automatic bowl flush.
When button 4 is pressed and chair begins to move to cuspidor position, automatic bowl flush is activated.
When cuspidor position is reached, power is removed from cuspidor solenoid.
Pressing button 4 again, returns chair to last position used before cuspidor position.

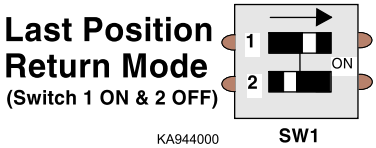

Figure 5-8. SW1 Switch (Last Position Return)

Last Position Return Mode (Fig. 5-8) allows user to move between two "Remembered" positions.
"Remembered Position" is a position stored by chair software anytime chair has set motionless for at least 1/2 second.
Pressing button 4 (Fig. 5-6) will move chair to last "remembered" position.
Pressing button 4 again toggles the chair between the last two "Remembered" positions..

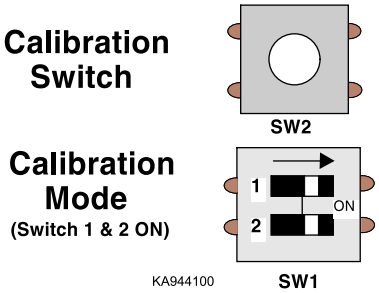

Figure 5-9. Calibration Mode

The purpose of **Calibration Mode** is to determine the end of travel potentiometer sensors settings, store them in the p.c. board software, and use this stored information to keep any movement slightly inside these settings or limits.

Calibration is an automatic routine. During calibration the chair completes two cycles.

The first cycle finds the extreme end of travel sensor settings.

The second cycle checks to assure the settings have been successfully stored and that they can be recalled by the software.

After placing both SW1 dip switches, 1 and 2, (Fig. 5-9) in the ON position, depress SW2 Calibration switch to initiate the Calibration Cycle.

NOTE
Program keys (1 thru 4) or Direction keys do not work when in Calibration Mode. The chair can be moved using Manual Override by pressing the program (P) key and the desired Directional key at the same time.

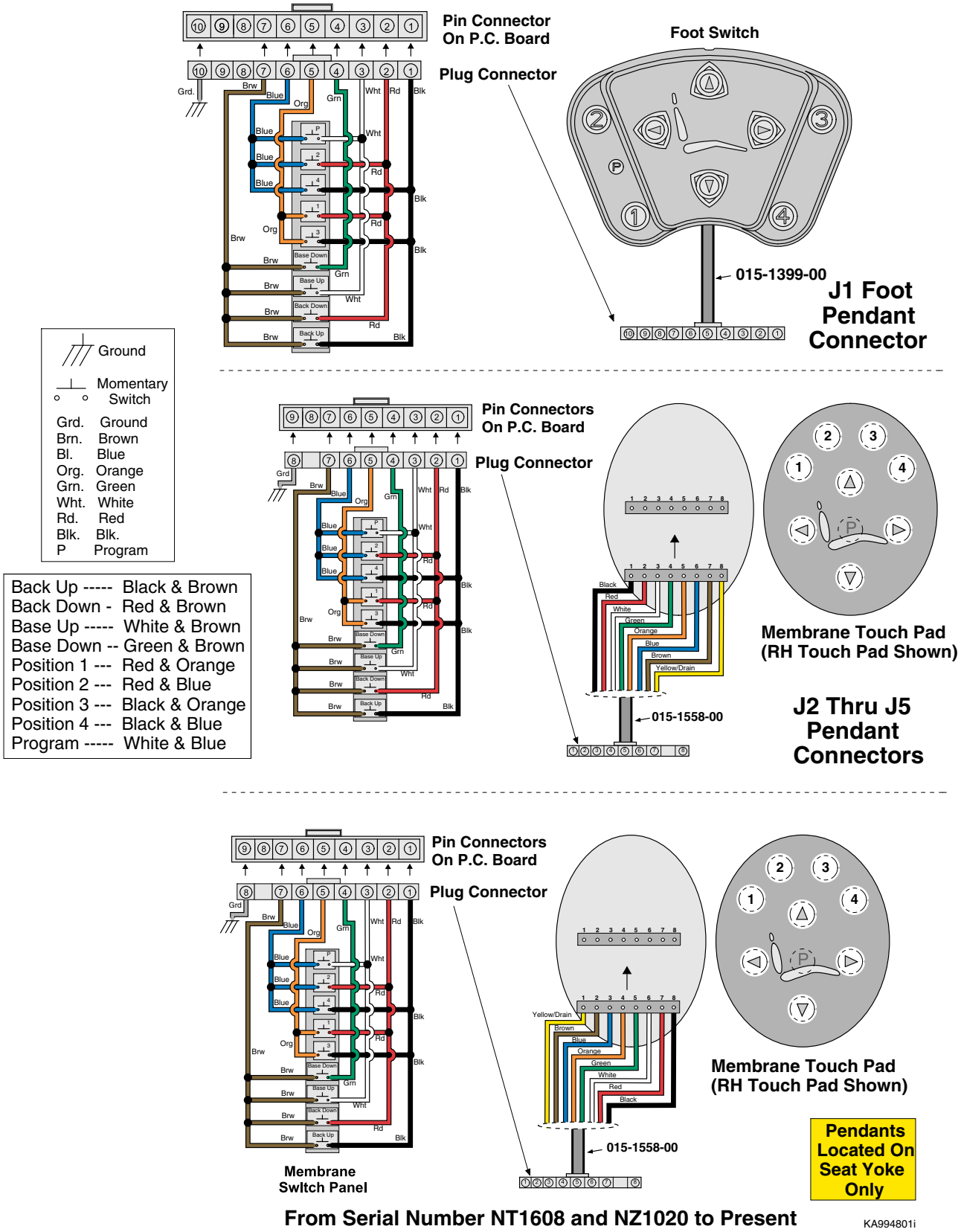

Figure 5-10. J1 thru J5 Pendant Connectors & Switches

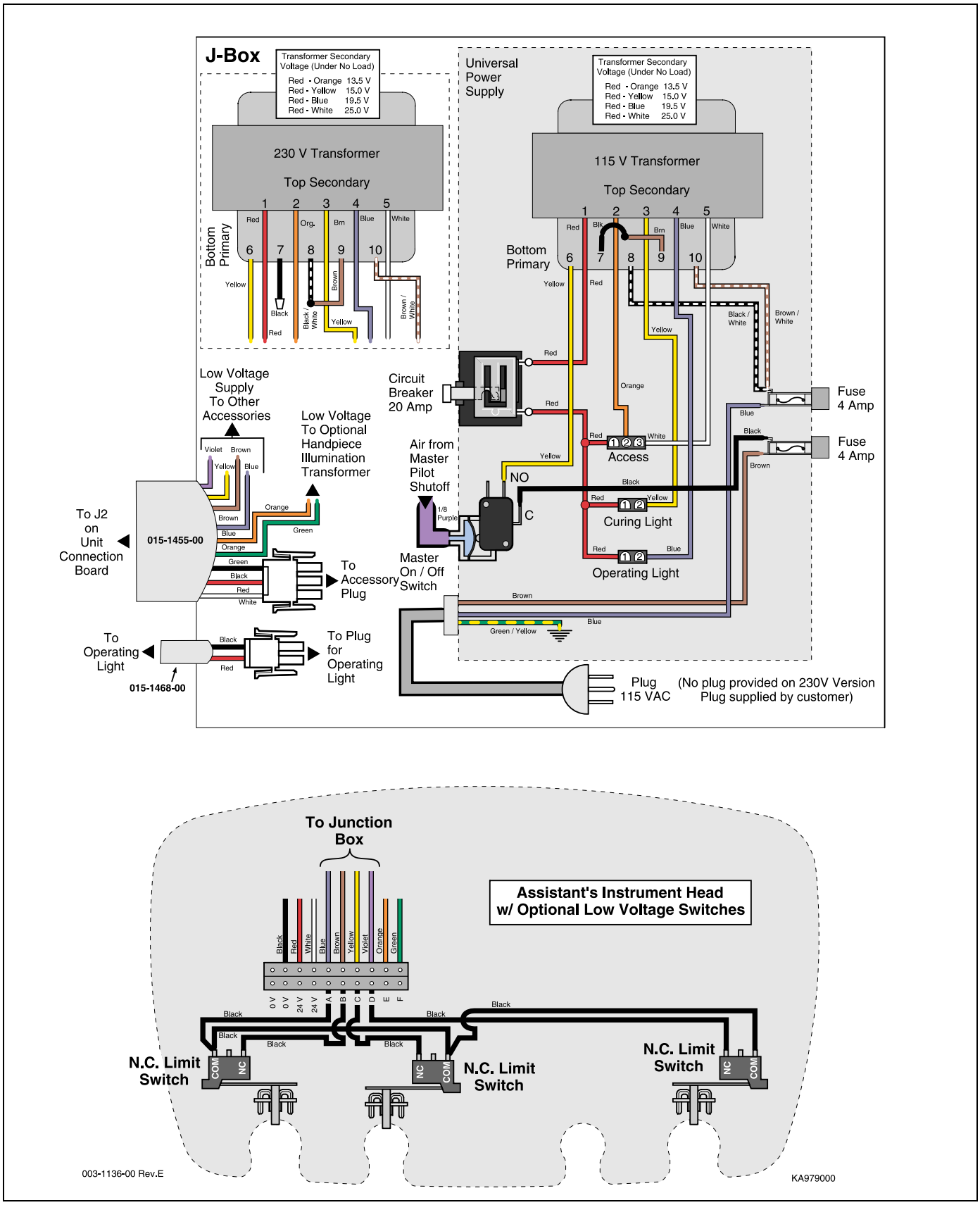

Figure 5-11. J-Box and Assistant's Instrument Head Diagram (115 or 230 VAC)

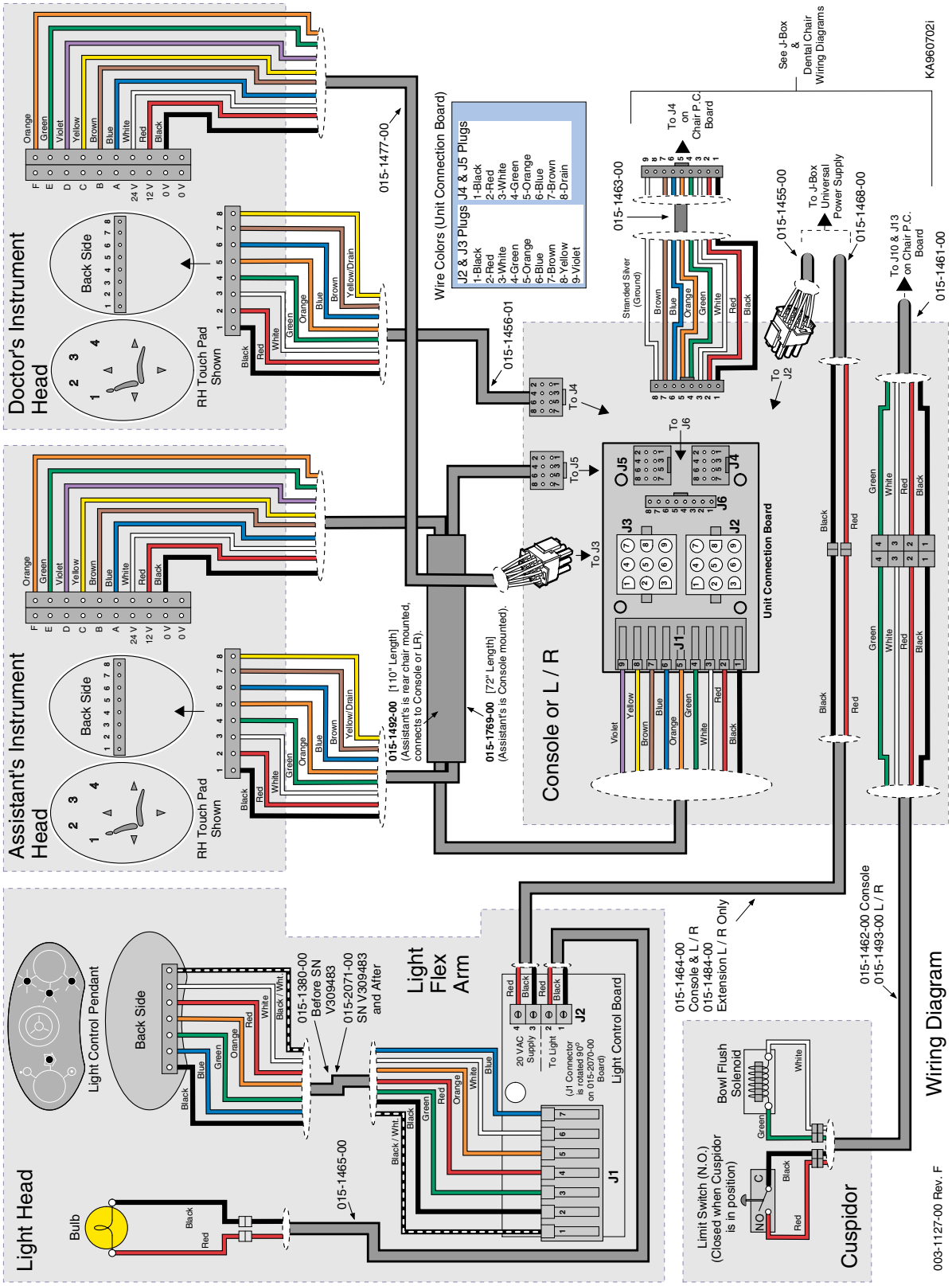

Figure 5-12. Console & Accessory Wiring Diagram

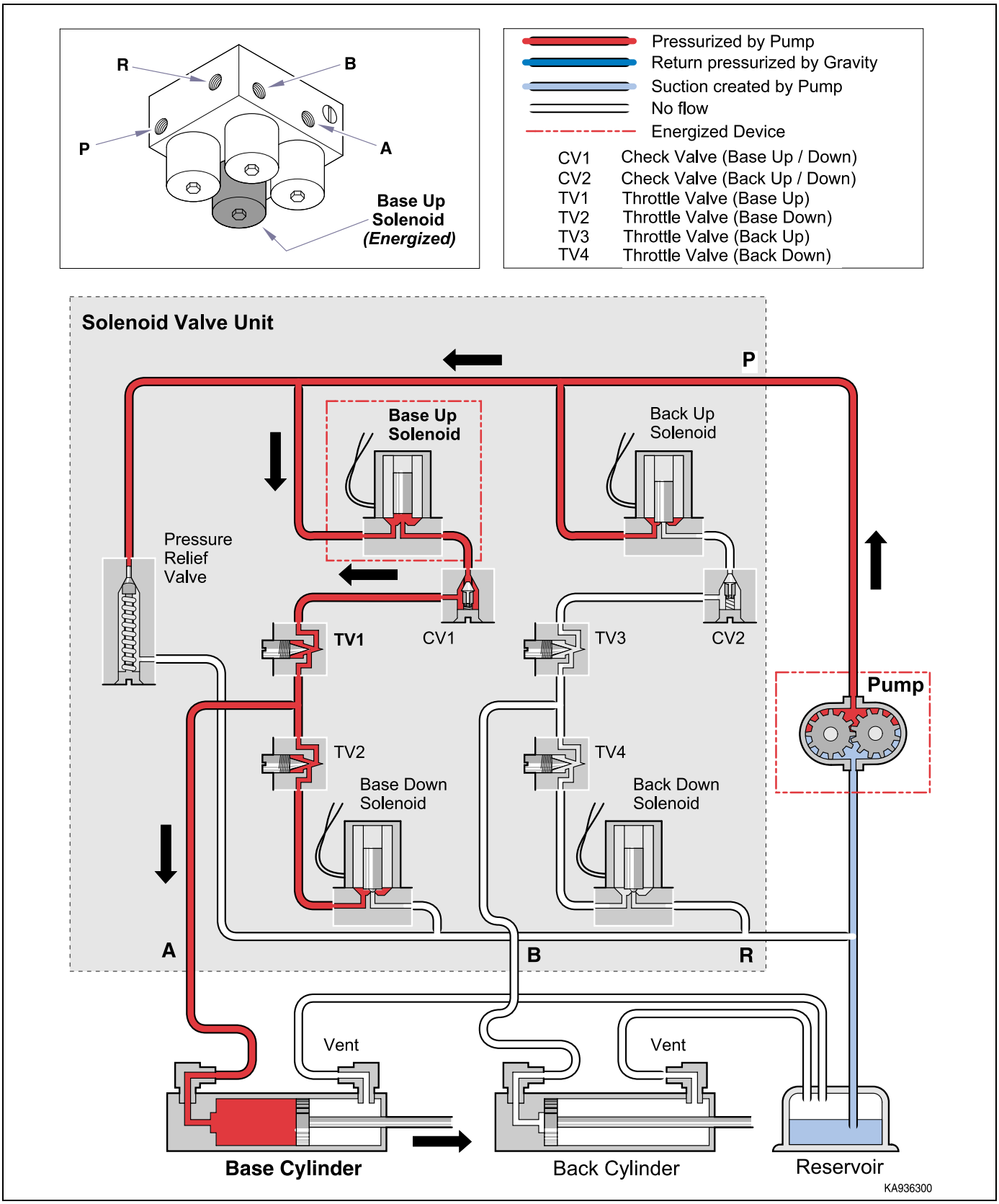

Figure 5-13. Base Up Hydraulic Function

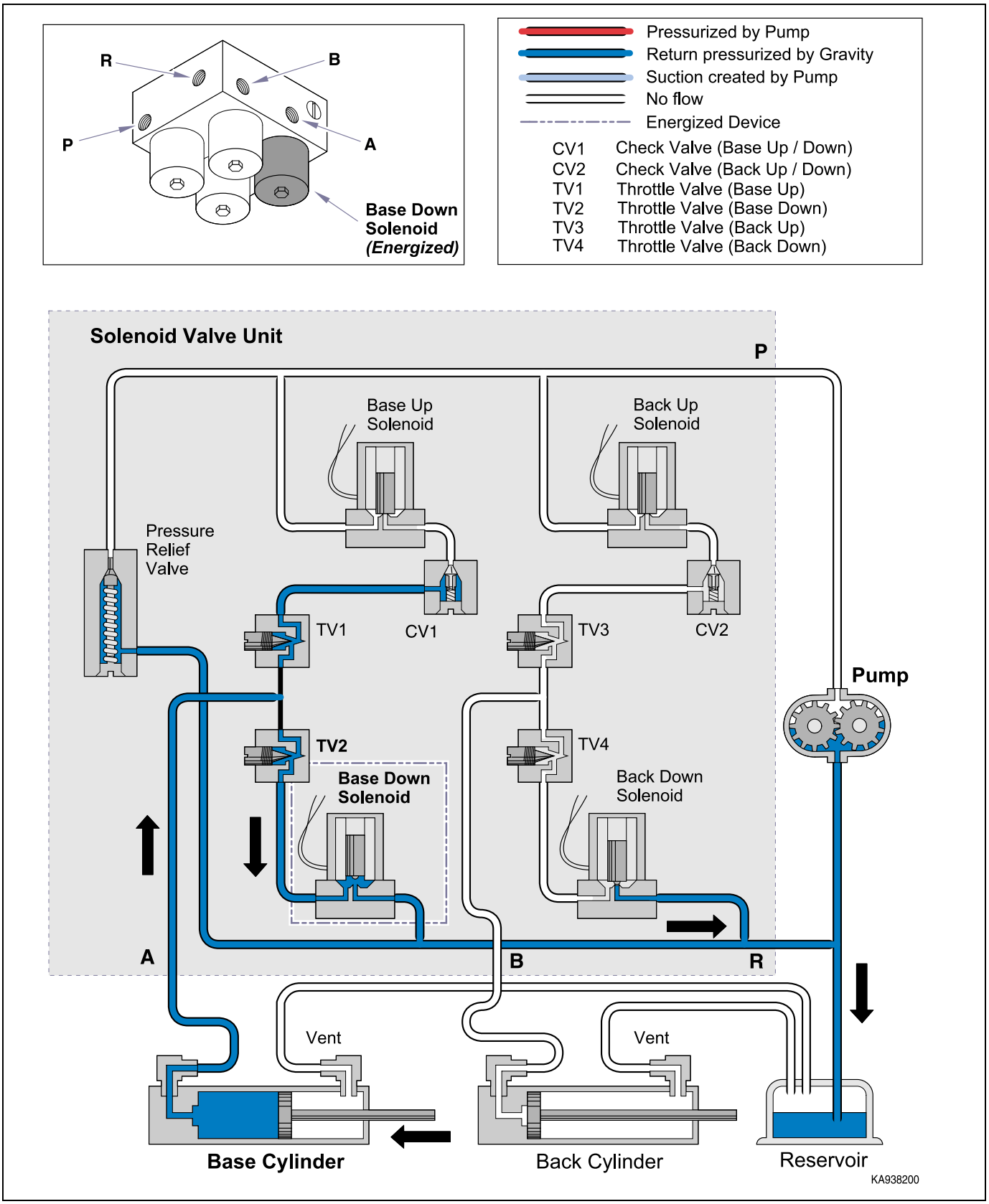

Figure 5-14. Base Down Hydraulic Function

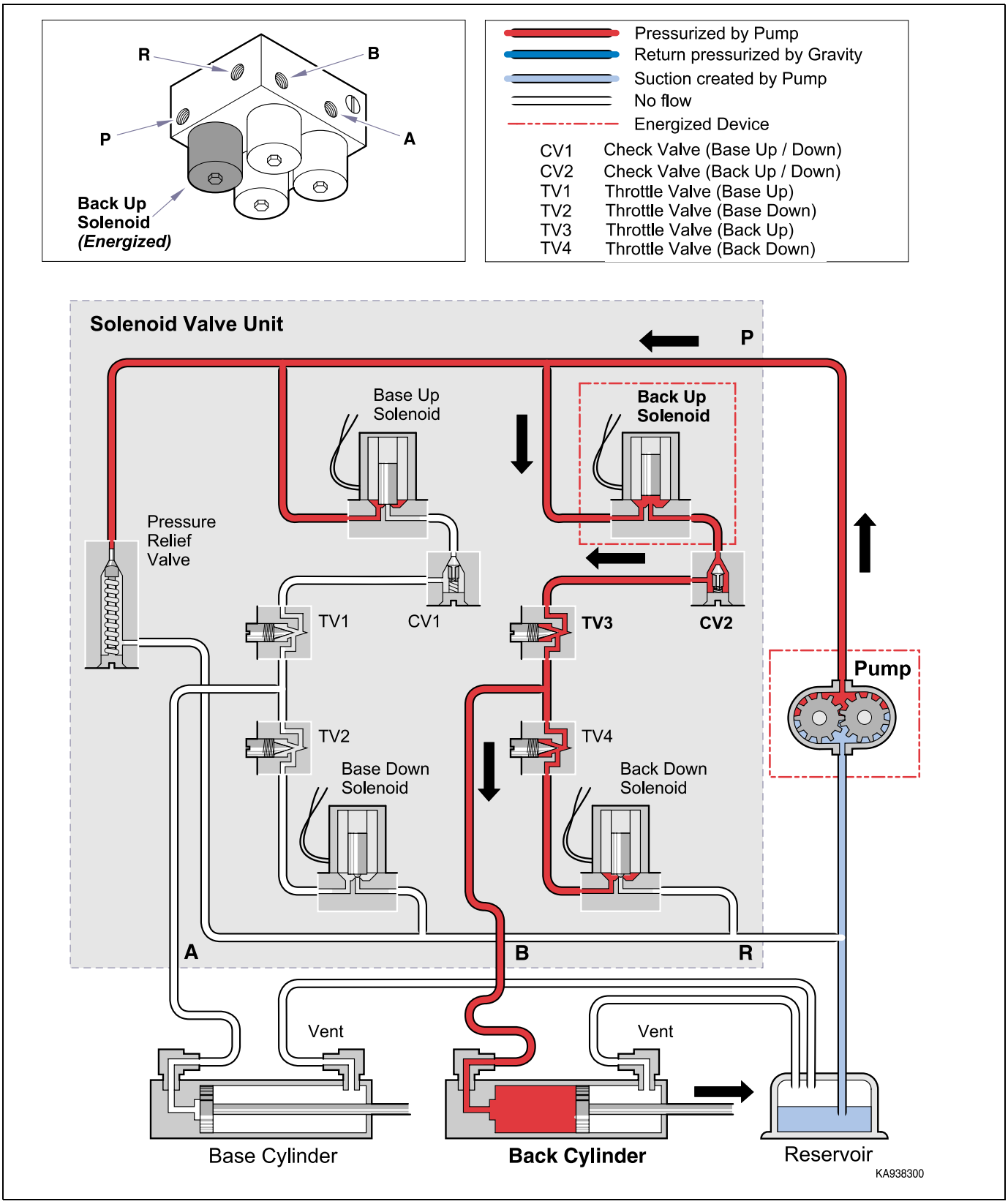

Figure 5-15. Back Up Hydraulic Function

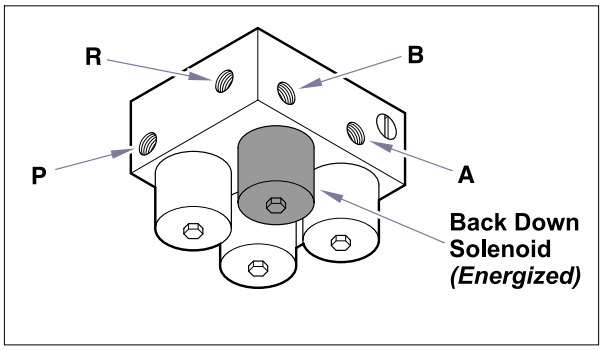

Pressurized by Pump
Return pressurized by Gravity
Suction created by Pump
No flow
Energized Device

CV1	Check Valve (Base Up / Down)
CV2	Check Valve (Back Up / Down)
TV1	Throttle Valve (Base Up)
TV2	Throttle Valve (Base Down)
TV3	Throttle Valve (Back Up)
TV4	Throttle Valve (Back Down)

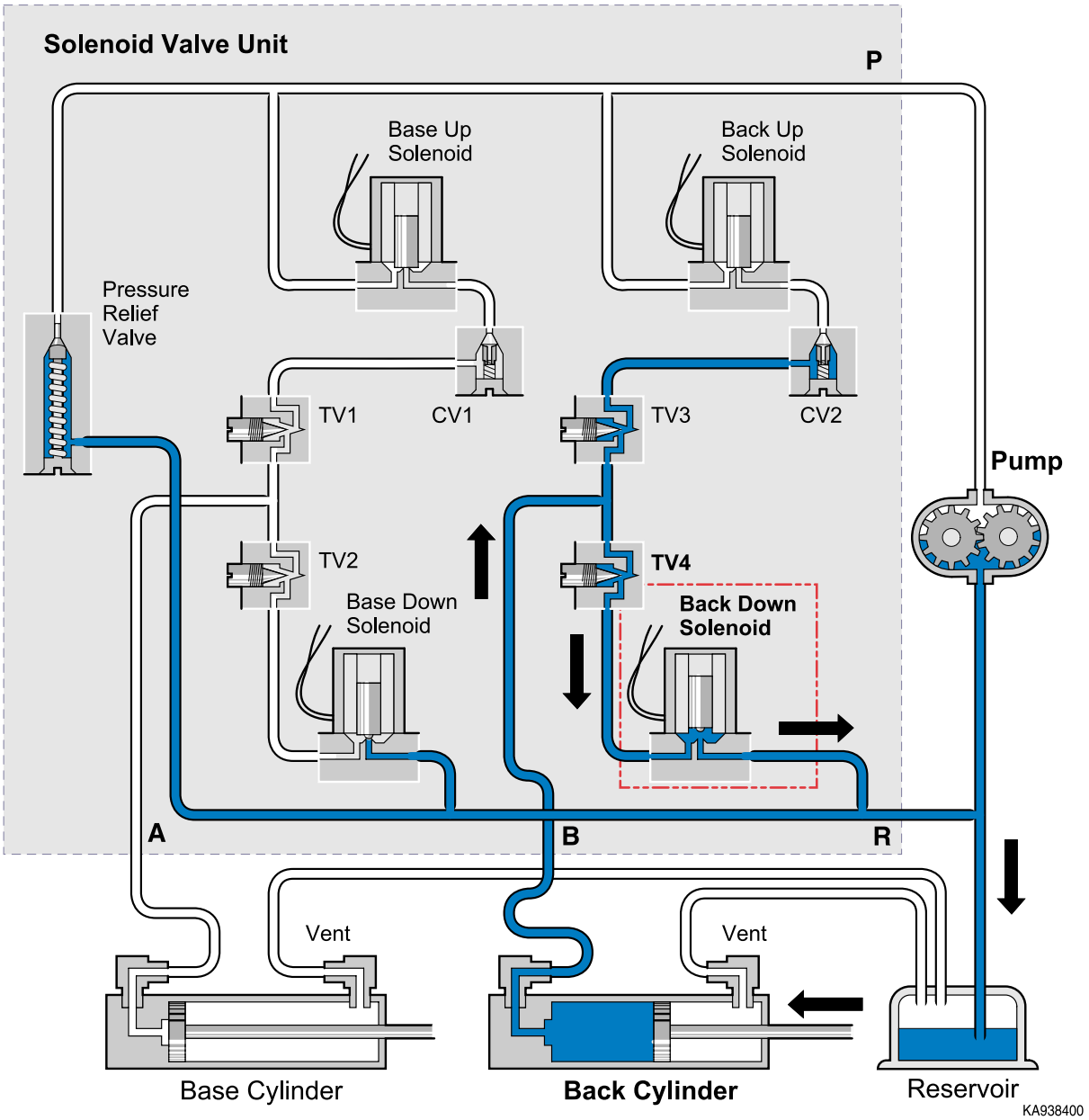

Figure 5-16. Back Down Hydraulic Function

SECTION VI
PARTS LIST

6.1 Introduction

The illustrated parts list provides information for identifying and ordering the parts necessary to maintain the unit in peak operating condition. Refer to paragraph 1.5 for parts ordering information.

6.2 Description of Columns

The Item column of the parts list gives a component its own unique number. The same number is given to the component in the parts illustration. This allows a part number of a component to be found if the technician can visually spot the part on the illustration. The technician simply finds the component in question on the illustration and notes the item number of that component. Then, he finds that item number in the parts list. The row corresponding to the item number gives the technician the part number, a description of the component, and quantity of parts per subassembly. Also, if a part number is known, the location of that component can be determined by looking for the item number of the component on the illustration.

The Part No. column lists the MIDMARK part number for that component.

The Description column provides a physical description of the component.

The Qty. column lists the number of units of a particular component required for the subassembly. The letters “AR” denote “as required” when quantities of a particular component cannot be determined, such as: adhesive.

Bullets { • } in the Part No. column and the Description column show the indenture level of a component. If a component does not have a bullet, it is a main component of that illustration. If a component has a bullet, it is a subcomponent of the next component listed higher in the parts list than itself that does not have a bullet. Likewise, if a component has two bullets, it is a subcomponent of the next component listed higher in the parts list than itself that has only one bullet.

6.3 Torque Specifications and Important Assembly Notes

When specific assembly torque specifications, measurements, or procedures have been identified, by our engineering department, as required to assure proper function of the unit, those torque specifications measurements, and procedures will be noted on the parts illustrations. Adherence to these requirements is essential.

Printed in U.S.A.

Go To Table Of Contents

Pictorial Index (*Ultra*Comfort ®)

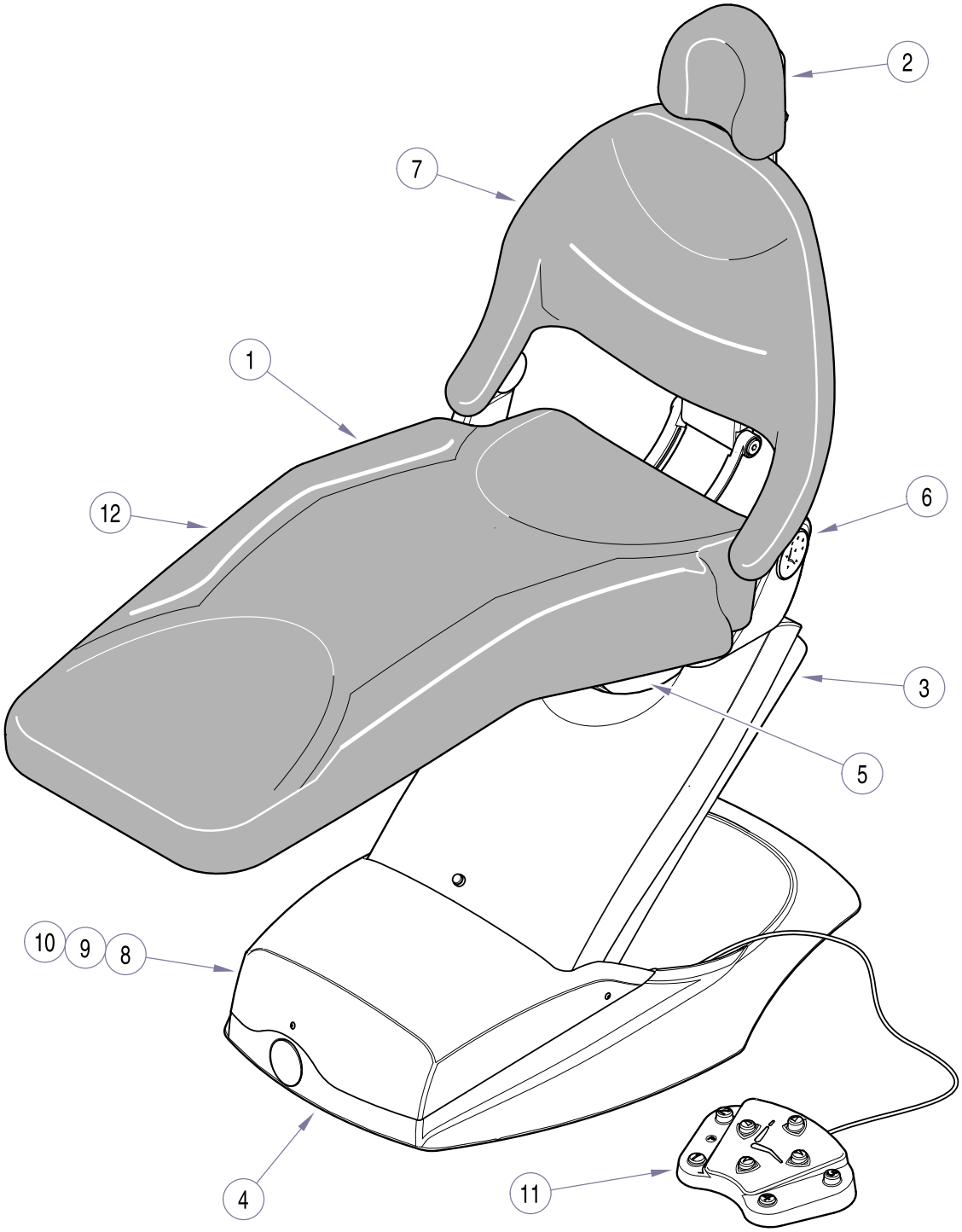

KA950300

Item	Part No.	Description	Page
	153592-001	Basic Dental Chair - 115V	
	153592-002	Console Dental Chair - 115V	
	153592-003	L/R Dental Chair - 115V	
	153592-004	Basic Dental Chair - 230V	
	153592-005	Console Dental Chair - 230V	
	153592-006	L/R Dental Chair - 230V	
1		Silhouette Uphol. (*Ultra***Comfort ®**)	6-4
		Ultraleather Uphol. (*Ultra***Comfort ®**	6-5
2		Double Articulating Headrest	6-8
		Magnetic Headrest	6-9

Item	Part No.	Description	Page
3		Covers	6-10
4		Base Components	6-11
5		Seat Components	6-12
6		Brake Components	6-13
7		Back Components (*Ultra***Comfort ®**)	6-14
8		Hydraulic Components	6-16
9		Hoses and Fittings	6-17
10		Electrical Components	6-18
11		Foot Control	6-19
12		L/R and Console Components	6-20

Always Specify Model & Serial Number

Printed in U.S.A.

Pictorial Index (*Ultra*Trim)

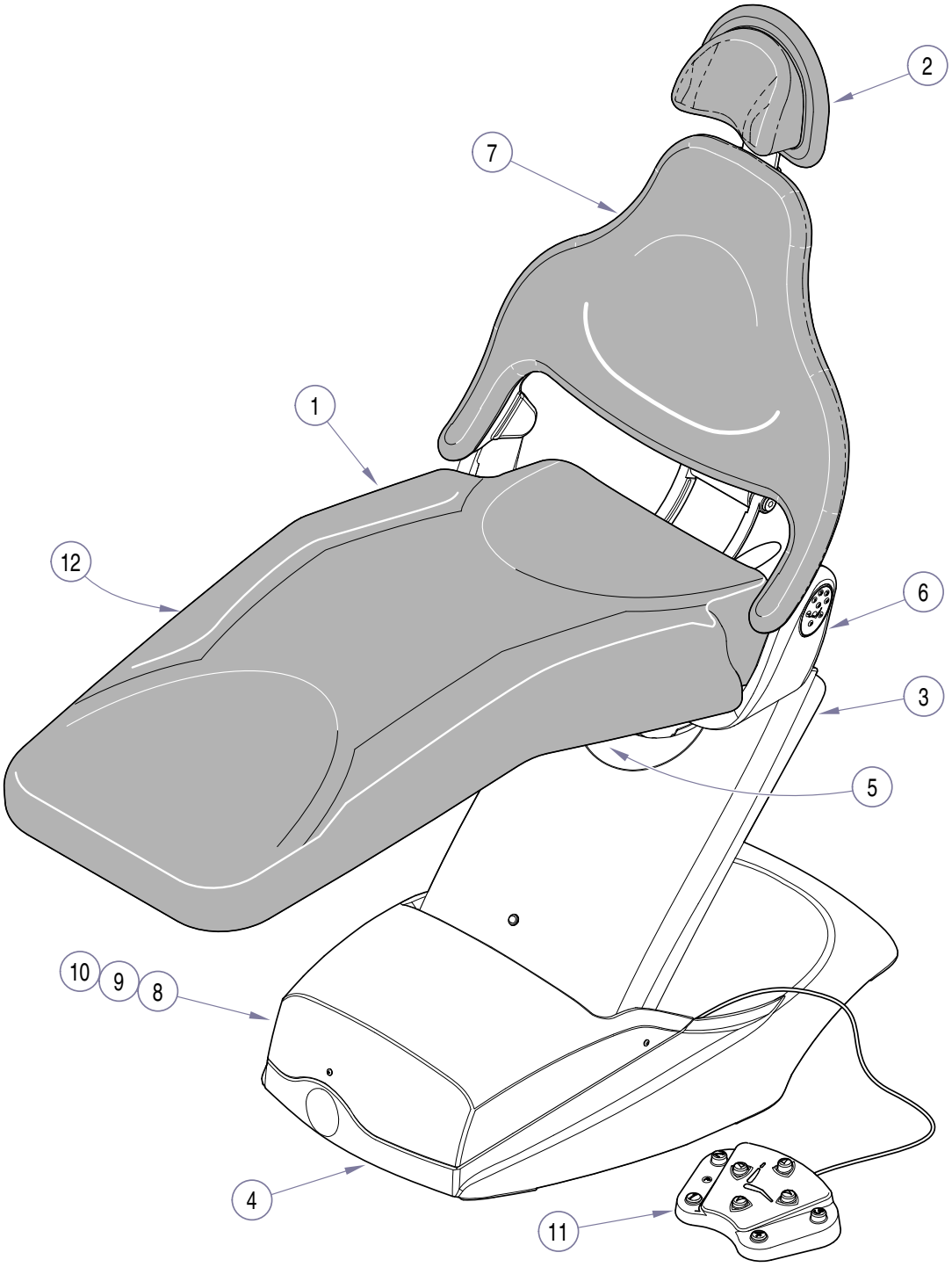

DA157500

Item	Part No.	Description	Page
	153758-001	Basic Dental Chair - 115V	
	153758-002	Console Dental Chair - 115V	
	153758-003	L/R Dental Chair - 115V	
	153758-004	Basic Dental Chair - 230V	
	153758-005	Console Dental Chair - 230V	
	153758-006	L/R Dental Chair - 230V	
1		Silhouette Upholstery (*Ultra***Trim**)	6-6
		Ultraleather Upholstery (*Ultra***Trim**)	6-7
2		Double Articulating Headrest	6-8
		Magnetic Headrest	6-9

Item	Part No.	Description	Page
3		Covers	6-10
4		Base Components	6-11
5		Seat Components	6-12
6		Brake Components	6-13
7		Back Components (*Ultra***Trim**)	6-15
8		Hydraulic Components	6-16
9		Hoses and Fittings	6-17
10		Electrical Components	6-18
11		Foot Control	6-19
12		L/R and Console Components	6-20

Always Specify Model & Serial Number

Printed in U.S.A.

Silhouette Upholstery (*Ultra*Comfort ®)

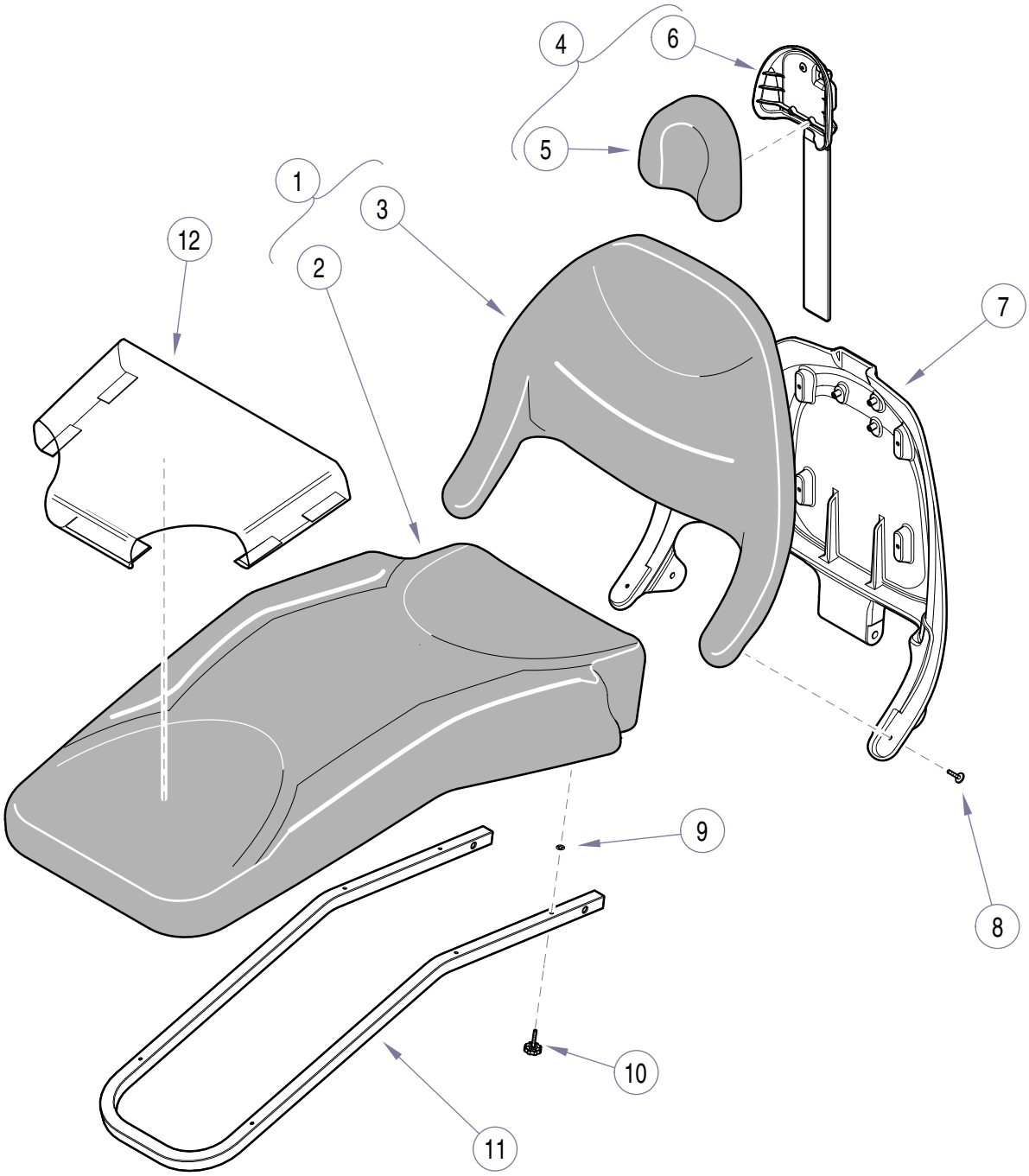

Color Selector.....www.midmark.com

KA948002

Item	Part No.	Description	Qty	Item	Part No.	Description	Qty
1	154070-xxx	Silhouette Upholstery (*Ultra***Comfort ®**) (Inclds Items 2 thru 3 [*Specify Color])	1	7		Back Casting (Ref. "Back Components")	Ref.
2	• 028-0504-xxx	• Seat Cushion (Includes Item 12)	1	8	042-0059-08	Bolt	2
3	• 028-0501-xxx	• Back Cushion	1	9	042-0201-00	Push Retainer (Early units only)	6
4	154074-xxx	Double Articulating Headrest w/uph. (inclds items 5 & 6 [*Specify Color])	1	10	002-1703-00	Knob Assembly	6
5	• 154071-xxx	• Headrest Cushion	1	11		Seat Frame (Ref. "Seat Components")	Ref
6	•	• Headrest (Ref. "Double Articulating Headrest")	Ref.	12	• • 029-2626-00	Footrest Cover (Standard)	1
				13	029-3834-00	Footrest Cover (Not Shown - Pediatric, 9" longer than Standard)	1

Always Specify Model & Serial Number

Printed in U.S.A.

Go To Table Of Contents

Ultraleather Upholstery (*Ultra*Comfort ®)

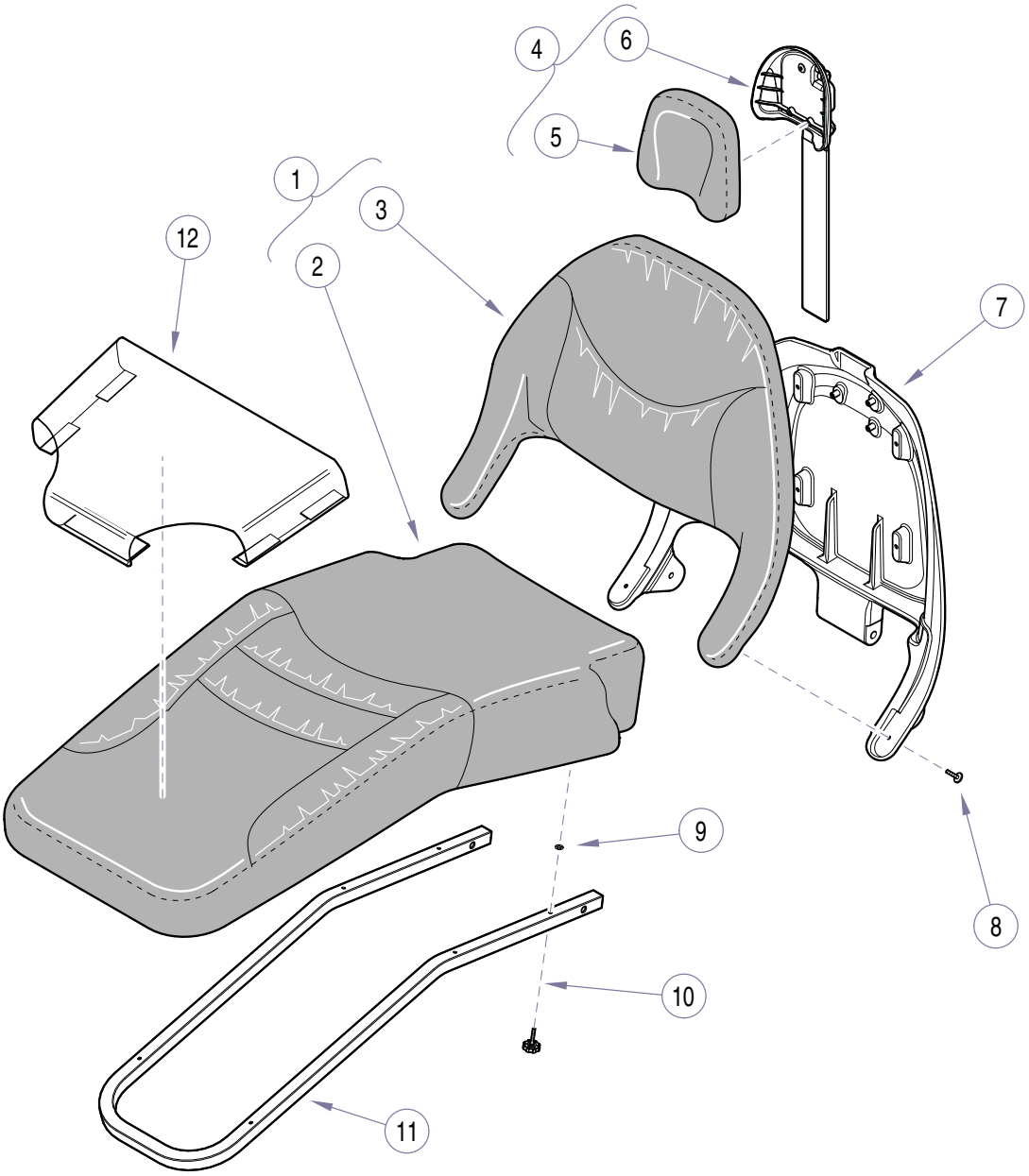

Color Selector.....www.midmark.com

KA948003

Item	Part No.	Description	Qty
1	154054-xxx	*Cut /Sewn Ultraleather Upholstery (Ultra**Comfort ®** [*Specify Color])*	1
	154103-xxx	*Seamless Ultraleather Upholstery (Ultra**Comfort ®** [*Specify Color])*	1
2	• 028-0505-xxx	• Cut/Sewn Seat Cush. (Includes Item 12) (*Ultra***Comfort ®** [*Specify Color])	1
	• 028-0536-xxx	• Seamless Seat Cush.(Includes Item 12) (*Ultra***Comfort ®** [*Specify Color])	1
3	• 028-0506-xxx	• Cut/Sewn Back Cushion (*Ultra***Comfort ®** [*Specify Color])	1
	• 028-0537-xxx	• Seamless Back Cushion (*Ultra***Comfort ®** [*Specify Color])	1
4	154051-xxx	Double Articulating Headrest w/uph. (*Ultra***Comfort ®** [*Specify Color])	1
5	• 154055-xxx	• Headrest Cushion (*Ultra***Comfort ®** [*Specify Color]	1
6	•	• Headrest (Refer to “Double Articulating Headrest”)	Ref.
7		Back Casting (Refer to “Back Components”)	Ref.
8	042-0059-08	Bolt	2
9	042-0201-00	Push Retainer (Early units only)	6
10	002-1703-00	Knob Assembly	6
11		Seat Frame (Refer to “”Seat Components”)	Ref.
12	029-2626-00	• • Footrest Cover (Standard)	1
13	029-3834-00	Footrest Cover (Not Shown - Pediatric, 9" longer than Standard)	1

Always Specify Model & Serial Number

Printed in U.S.A.

Go To Table Of Contents

Silhouette Upholstery (*Ultra*Trim)

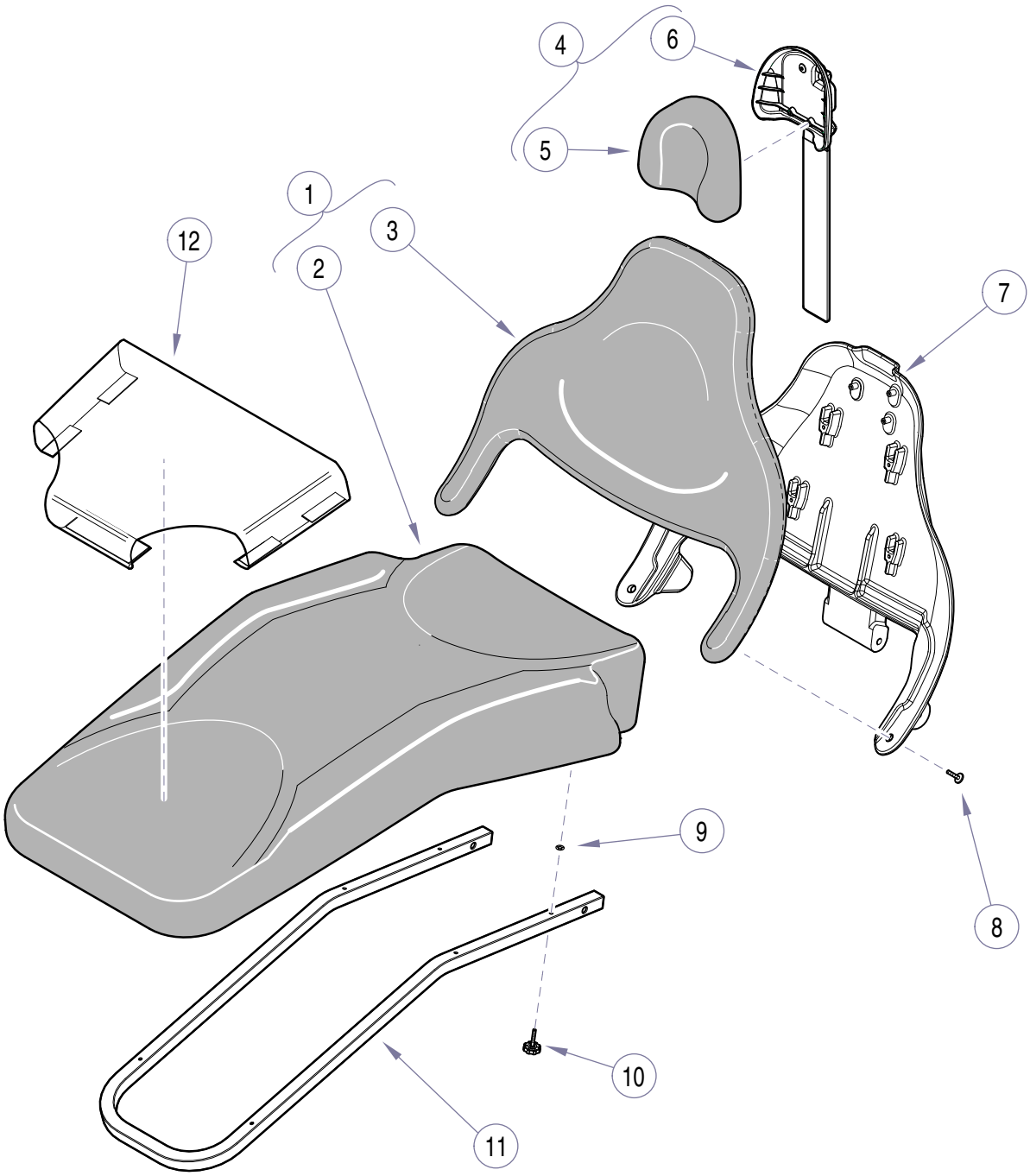

Color Selector.....www.midmark.com

DA157900i

Item	Part No.	Description	Qty
1	154109-xxx	Silhouette Upholstery (*Ultra***Trim**) (Inclds Items 2 thru 3 [*Specify Color])	1
2	• 028-0504-xxx	• Seat Cushion (*Specify Color)] (includes item 12)	1
3	• 028-0575-00-xxx	• Back Cushion (*Specify Color)	1
4	154074-xxx	Double Articulating Headrest w/uph. (includes items 5 & 6 [*Specify Color])	1
5	• 154071-xxx	• Headrest Cushion (*Specify Color)	1
6	•	• Headrest (Refer to "Double Articulating Headrest")	Ref.
7		Back Casting (Refer to "Back Components")	Ref.
8	042-0059-08	Bolt	2
9	042-0201-00	Push Retainer (Early units only)	6
10	002-1703-00	Knob Assembly	6
11		Seat Frame (Refer to "Seat Components")	Ref.
12	029-2626-00	• • Footrest Cover (Standard)	1
13	029-3834-00	Footrest Cover (Not Shown - Pediatric, 9" longer than Standard)	1

Always Specify Model & Serial Number

Printed in U.S.A.

Go To Table Of Contents

Ultraleather Upholstery (*Ultra*Trim)

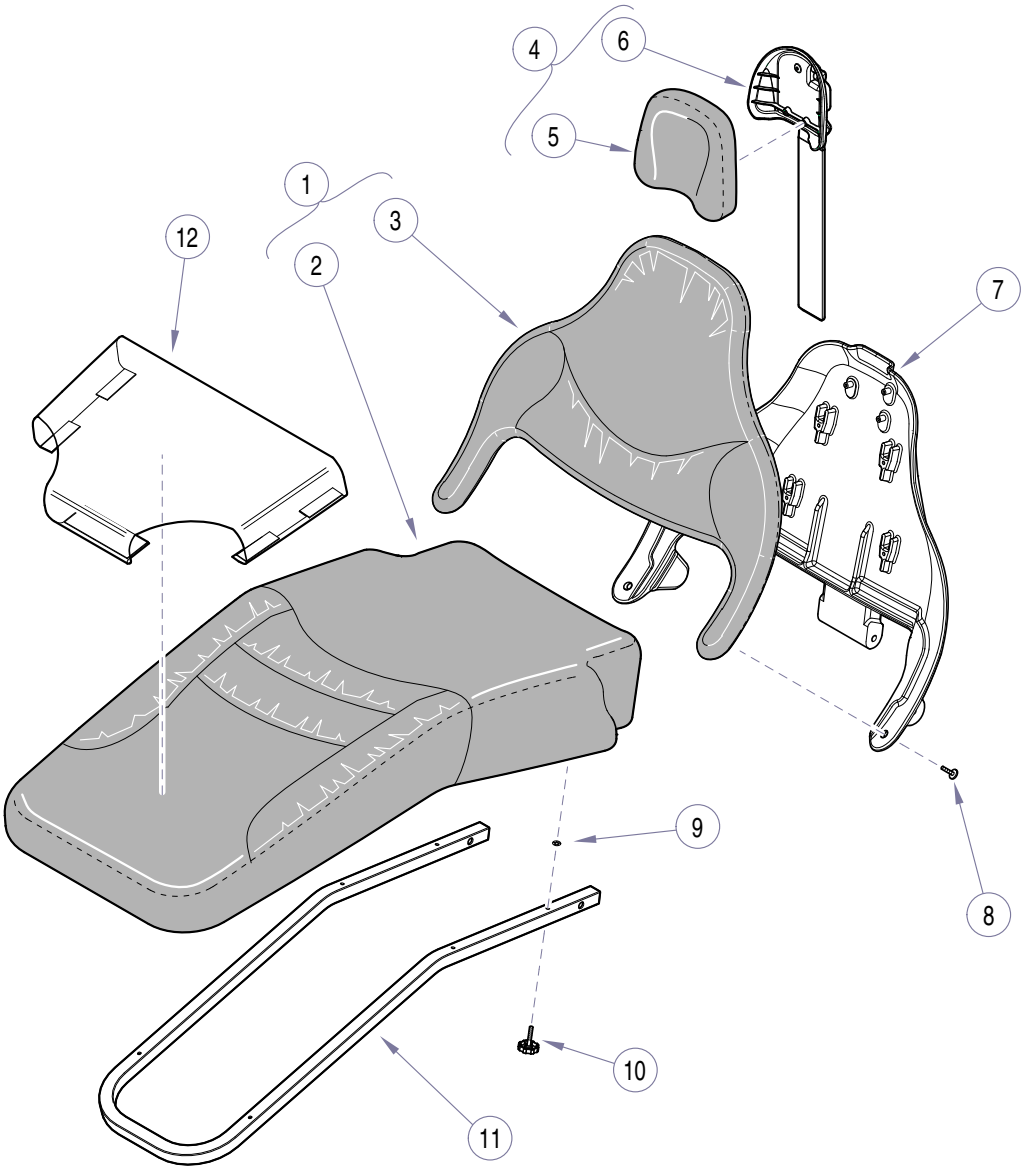

Color Selector.....www.midmark.com

DA158000i

Item	Part No.	Description	Qty
1	154110-xxx	Cut/Sewn Ultraleather Upholstery (*Ultra***Trim** [*Specify Color])	1
	154111-xxx	Seamless Ultraleather Upholstery (*Ultra***Trim** [*Specify Color])	1
	154112-xxx	Cut/Sewn Ultraleather Uph. / *Cal 133* (*Ultra***Trim** [*Specify Color]) (sold as complete set only)	1
2	• 028-0505-xxx	•Cut/Sewn Seat Cush (includes item 12 *Ultra***Trim** [*Specify Color])	1
	• 028-0536-xxx	•Seamless Seat Cush (Includes Item 12 (*Ultra***Trim** [*Specify Color])1	
3	• 028-0576-00-xxx	•Cut/Sewn Back Cushion (*Ultra***Trim** [*Specify Color])	1
	• 028-0577-00-xxx	•Seamless Back Cushion (*Ultra***Trim** [*Specify Color])	1
4	154051-xxx	Double Articulating Headrest w/uph. (incl items 5 & 6 [*Specify Color])	1
5	• 154055-xxx	•Headrest Cushion (*Ultra***Trim** [*Specify Color])	1
6	•	•Headrest (Refer to "Double Articulating Headrest")	Ref.
7		Back Casting (Refer to "BackComponents")	Ref.
8	042-0059-08	Bolt	2
9	042-0201-00	Push Retainer	6
10	002-1703-00	Knob Assembly	6
11		Seat Frame (Ref er to "Seat Components")	Ref.
12	029-2626-00	• • Footrest Cover (Standard)	1
13	029-3834-00	Footrest Cover (Not Shown - Pediatric, 9" longer than Standard)	1

Always Specify Model & Serial Number

Printed in U.S.A.

Double Articulating Headrest

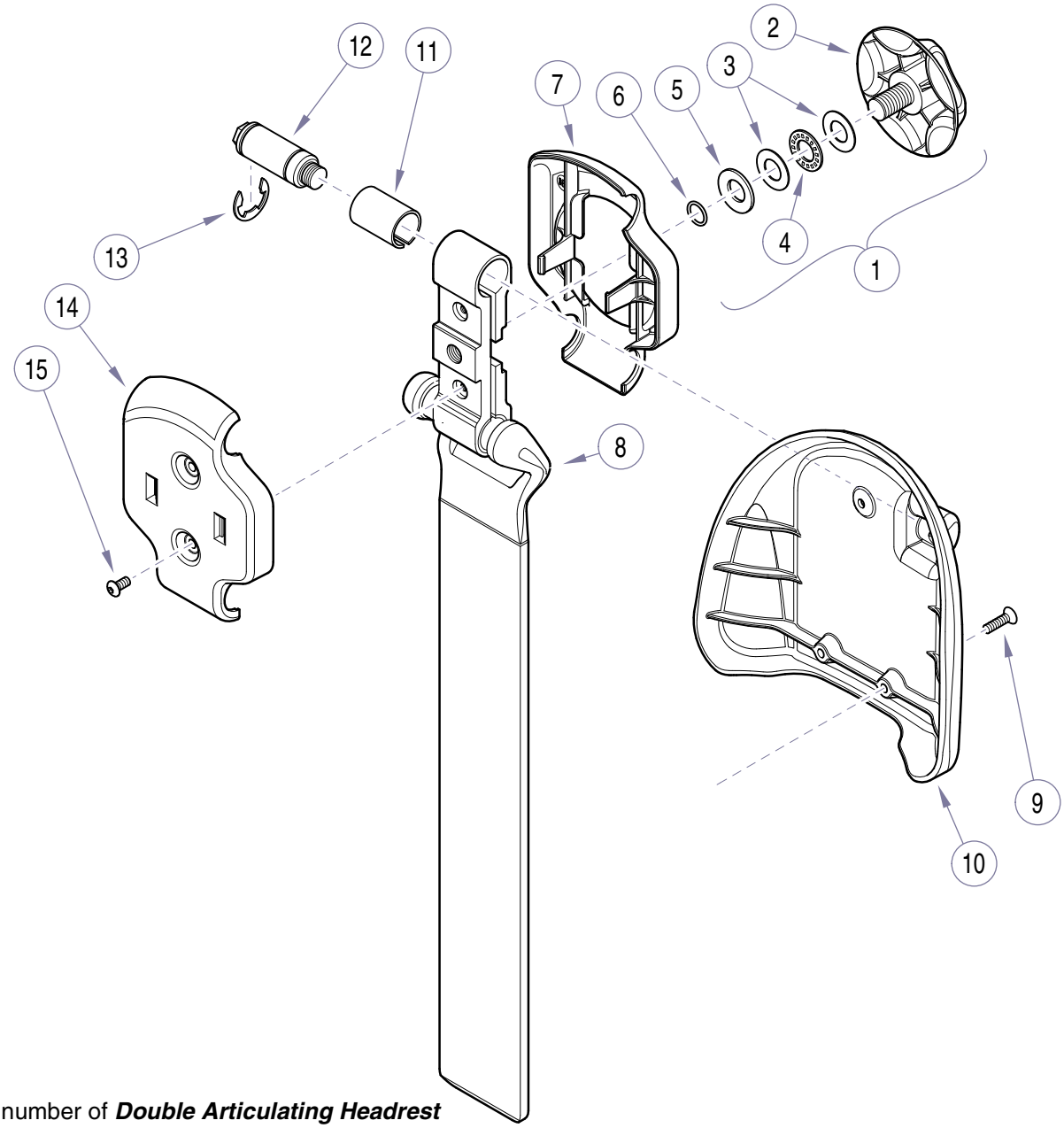

NOTE:
For part number of ***Double Articulating Headrest Assy w/upholstery***, refer to "Silhouette Upholstery" or "Ultraleather Upholstery" as appropriate.

KA942702i

Used on Units with Serial Number NT1000 thru NT4239, NZ1000 thru NZ1255

Item	Part No.	Description	Qty
	~~029-4195-00~~	Double Articulating Headrest (Includes Items 1 thru 15) ***(N.L.A)***	1
1	• 002-1479-00	• Dental Headrest Knob Kit (Includes Items 2 thru 6)	1
2	• • 029-2551-01	• • Knob	1
3	• • 120712	• • Thrust Washer	2
4	• • 110207	• • Thrust Bearing	1
5	• • 045-0001-126	• • Washer	1
6	• • 014-0176-06	• • O-Ring	1
7	• 053-1095-00	• Male Clamp Cover	1
8	• 030-1330-50	• Tang (w/clamp 021-0042-03)	1
9	• 040-0010-148	• Screw	3
10	• 002-1077-00	• Headrest Kit *(Incl 10, 11, 12 [LH thd])*	1
11	• • *N.S.P.*	• • Sleeve Bearing	1
12	• • *N.S.P.*	• • Short Pivot *(LH threads)*	1
13	• • *N.S.P.*	• • E-Ring	2
14	• 053-1094-00	• Female Clamp Cover	1
15	• 040-0010-141	• Screw	2

N.S.P. Denotes "Non Serviceable Part"
Always Specify Model & Serial Number

Double Articulating Headrest

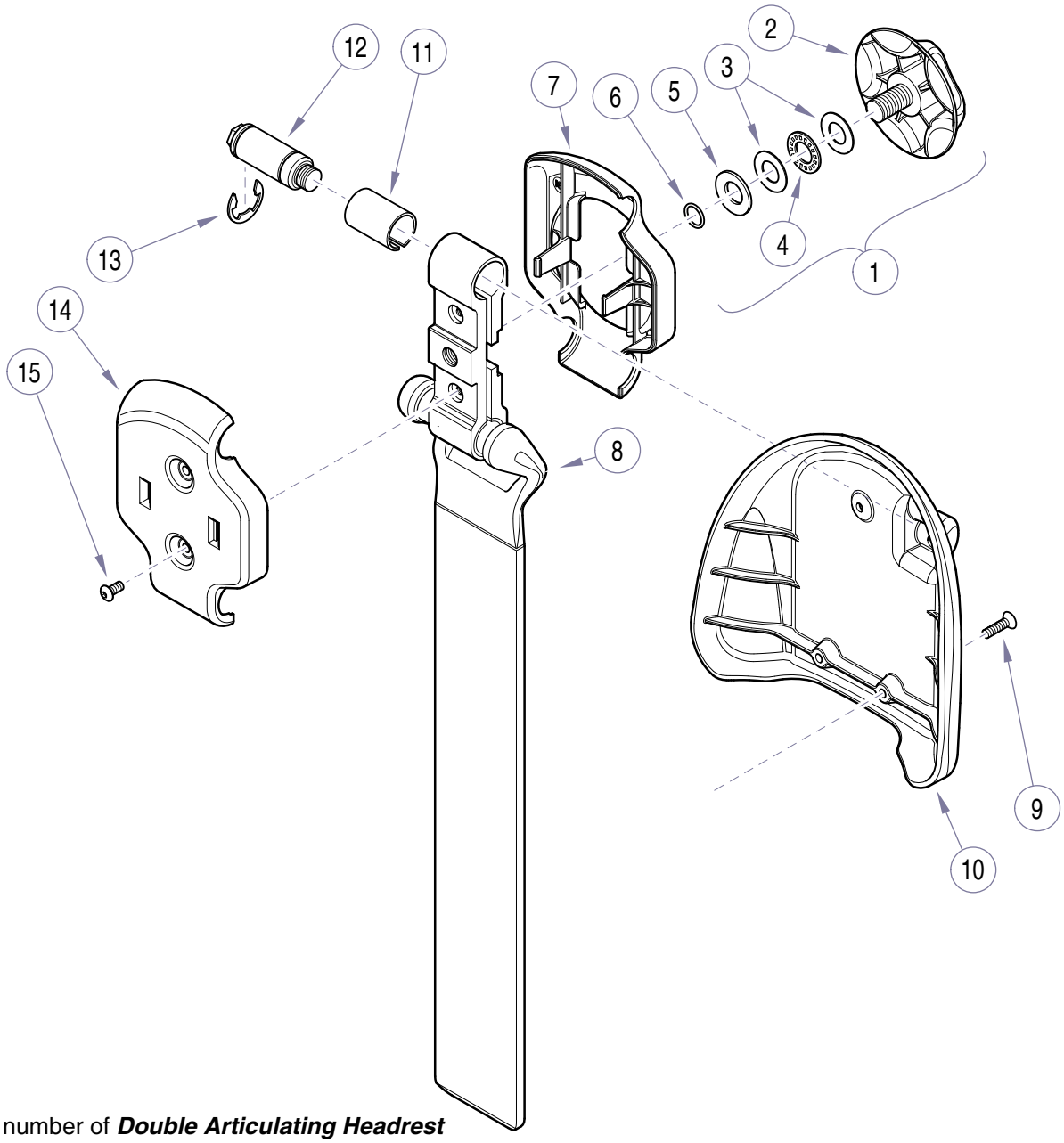

NOTE:
For part number of ***Double Articulating Headrest Assy w/upholstery***, refer to "Silhouette Upholstery" or "Ultraleather Upholstery" as appropriate.

KA942702i

Used on Units with Serial Number NT4240 and NZ1256 thru Present
Used on Units with Serial Number V2200 thru V462685

Item	Part No.	Description	Qty
	~~029-4195-00~~	Double Articulating Headrest (Includes Items 1 thru 15) ***(N.L.A)***	1
1	• 002-1479-00	• Dental Headrest Knob Kit (Includes Items 2 thru 6)	1
2	• • 029-2551-01	• • Knob	1
3	• • 120712	• • Thrust Washer	2
4	• • 110207	• • Thrust Bearing	1
5	• • 045-0001-126	• • Washer	1
6	• • 014-0176-06	• • O-Ring	1
7	• 053-1095-01	• Male Clamp Cover	1
8	• 030-1330-50	• Tang (w/clamp 021-0042-03)	1
9	• 040-0010-148	• Screw	3
10	• 002-1077-00	• Headrest Kit *(Incl 11, 12, 13 [LH thd])*	1
11	• • *N.S.P.*	• • Sleeve Bearing	1
12	• • *N.S.P.*	• • Short Pivot *(LH threads)*	1
13	• • *N.S.P.*	• • E-Ring	2
14	• 053-1094-01	• Female Clamp Cover	1
15	• 040-0010-141	• Screw	2

N.S.P. Denotes "Non Servicable Part"
Always Specify Model & Serial Number

Printed in U.S.A.

Double Articulating Headrest

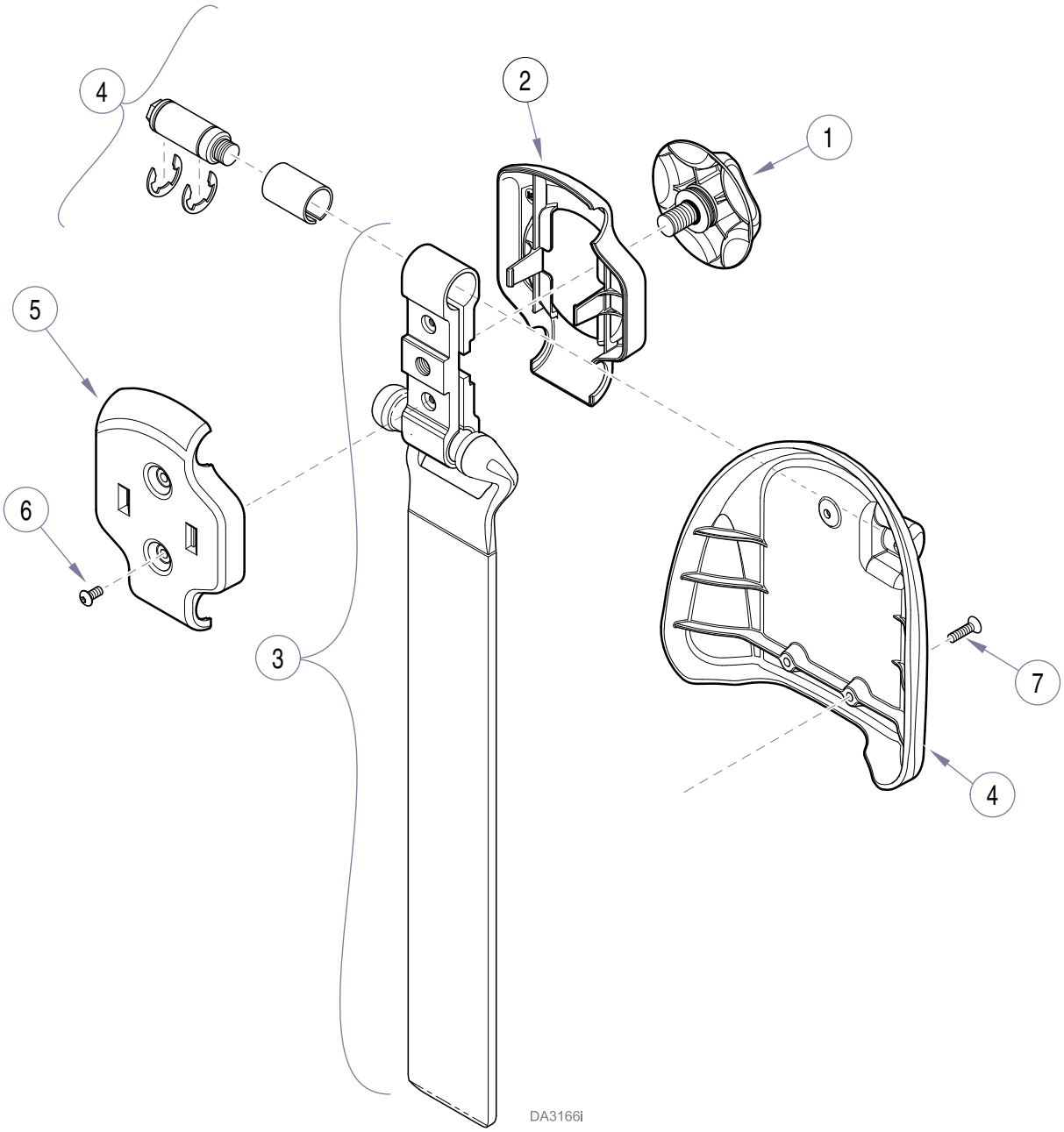

NOTE:
For part number of ***Double Articulating Headrest Assy w/upholstery***, refer to “Silhouette Upholstery” or “Ultraleather Upholstery” as appropriate.

Used on Units with Serial Number V462686 thru V1396879

Item	Part No.	Description	Qty
	~~029-4195-00~~	Double Articulating Headrest (Includes Items 1 thru 7) ***(N.L.A)***	1
1	002-1479-00	Dental Headrest Knob Kit	1
2	053-1095-01	Male Clamp Cover	1
3	030-1330-50	Tang (w/clamp 021-0042-03)	1
4	002-1077-00	Headrest Replacement Kit	1
5	053-1094-01	Female Clamp Cover	1
6	040-0010-148	Screw	3
7	040-0010-141	Screw	2

Always Specify Model & Serial Number

Printed in U.S.A.

Double Articulating Headrest

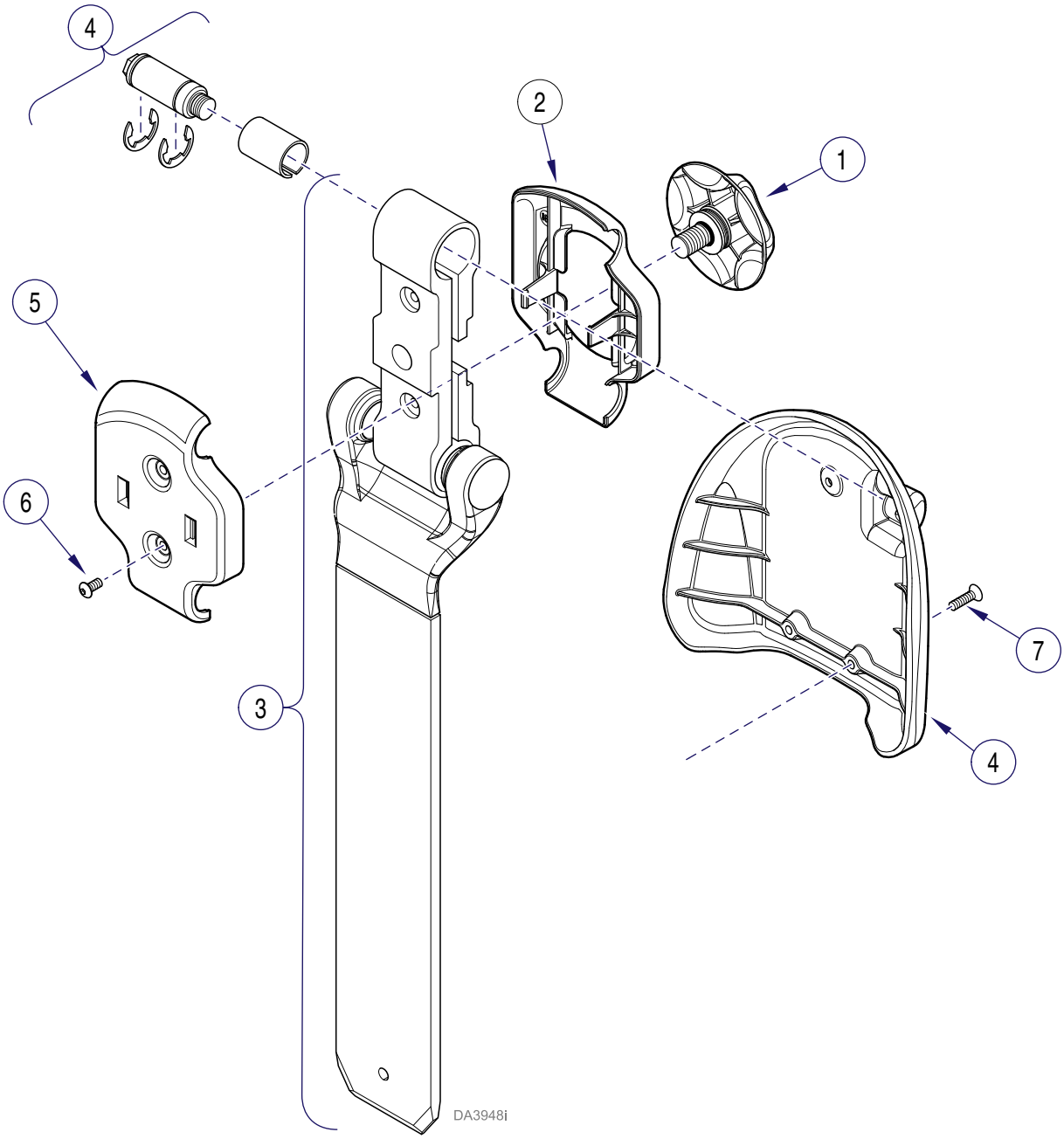

NOTE:
For part number of ***Double Articulating Headrest Assy w/upholstery***, refer to “Silhouette Upholstery” or “Ultraleather Upholstery” as appropriate.

Used on Units with Serial Number V1396880 thru Present

Item	Part No.	Description	Qty
	029-5730-00	Double Articulating Headrest (Includes Items 1 thru 7)	1
1	002-1479-00	Dental Headrest Knob Kit	1
2	053-1095-01	Male Clamp Cover	1
3	030-2109-00-216	Tang (used w/clamp 021-0042-03)	1
4	002-1077-00	Headrest Replacement Kit	1
5	053-1094-01	Female Clamp Cover	1
6	040-0010-148	Screw	3
7	040-0010-141	Screw	2

Always Specify Model & Serial Number

Printed in U.S.A.

Magnetic Headrest

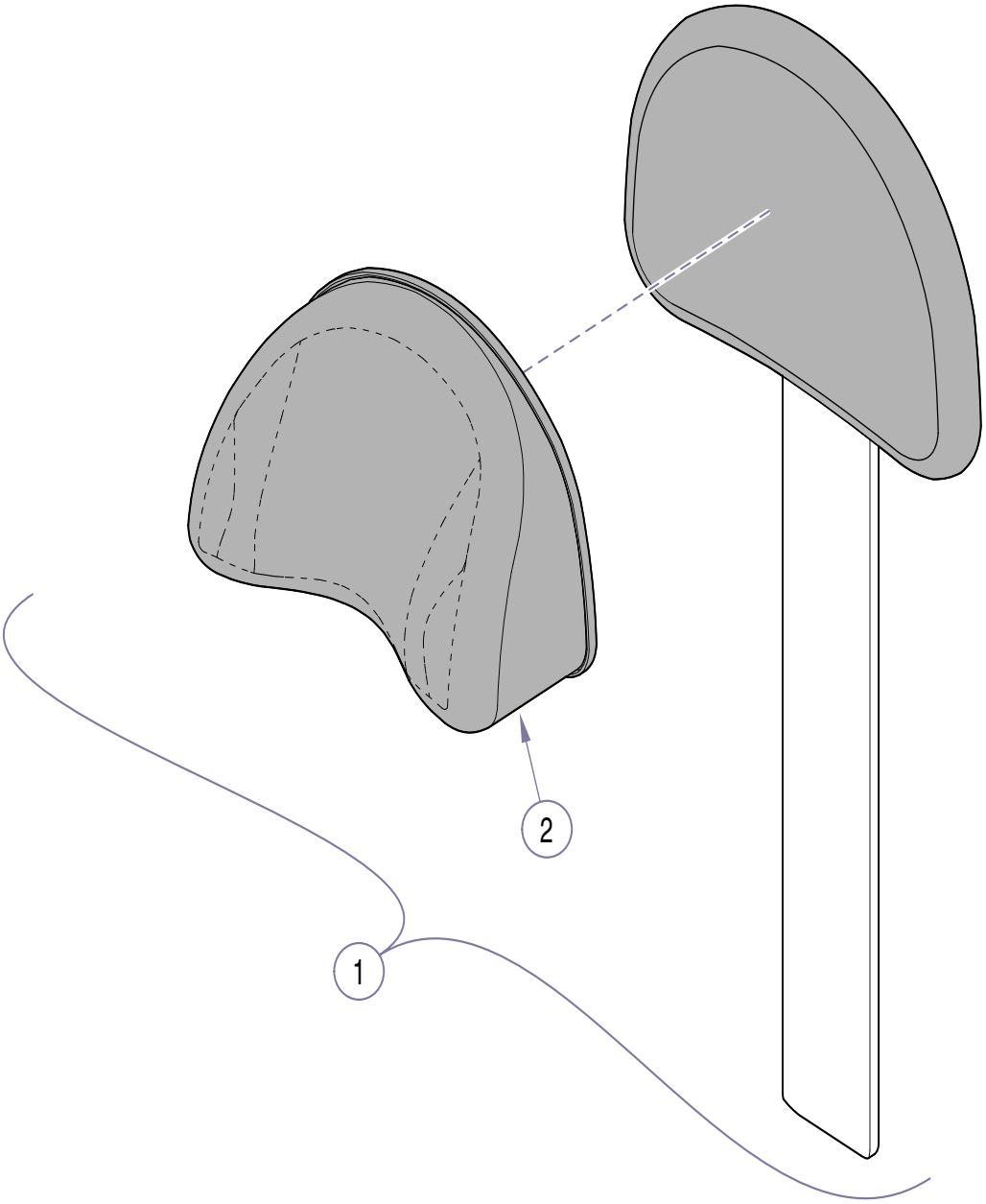

Color Selector.....www.midmark.com

KA958200

Item	Part No.	Description	Qty
1	154052-xxx	Magnetic Headrest (**Ultraleather** [*Specify color})	1
	154073-xxx	Magnetic Headrest (Silhouette) (Includes Item 2 [*Specify color}))	1
2	153636-xxx	Pillow (**Ultraleather** [*Specify color}))	1
	153577-xxx	Pillow (**Silhouette** [*Specify color}))	1

(N.L.A.- No Longer Available)

Always Specify Model & Serial Number

Covers

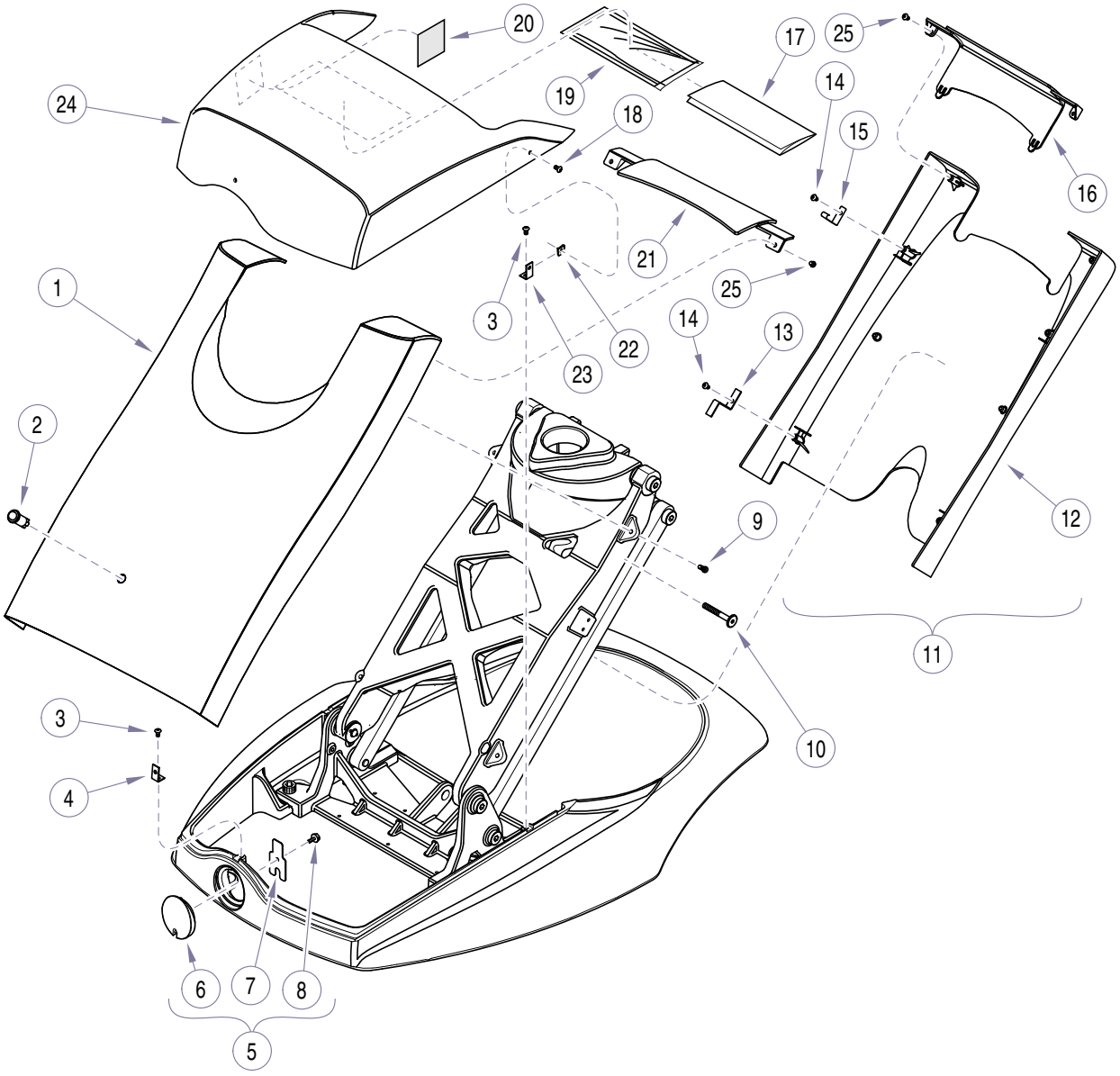

KA942901i

Used on Units with Serial Number NT1000 thru NT4239, NZ1000 thru NZ1255

Item	Part No.	Description	Qty
1	123052	Lift Arm Cover	1
2		Indicator Light (Refer to “Electrical Components”)	Ref
3	040-0010-109	Screw	3
4	123073	Front Hydraulic Cover Clip	1
5	029-2524-00	Umbilical Plug Assembly (Includes Items 6 thru 8 [Stand-alone Chair only])	1
6	• 123060-01	• Umbilical Plug	1
7	• 050-5394-00	• Umbilical Strap	1
8	• 042-0168-00	• Screw	1
9	116764	Screw	4
10	042-0059-03	Joint Connector Bolt	4
11	002-1711-00	Safety Bail (Includes Items 12 thru 15)	1
12	• 123059	• Safety Bail Cover	1
13	• 123087	• Support	2
14	• 040-0008-102	• Screw	4
13	• 123087	• Support	2
14	• 040-0008-102	• Screw	4
15	• 058-0010-00	• Hook Bracket	2
16	123054	Small Safety Bail Cover	1
17	003-1246-00	Wiring Diagram - 115V	1
	003-1247-00	Wiring Diagram - 230V	1
18	121980-5	Screw	3
19	016-0882-00	Pouch	1
20	061-0791-00	Fuse Location Label - 115V	1
	061-0807-00	Fuse Location Label - 230V	1
21	123055	End Cover	1
22	121972	Tinnerman Nut	3
23	123074	Side Hydraulic Cover Clip	2
24	123051	Hydraulic Cover	1
25	040-0008-102	Screw	4

Always Specify Model & Serial Number

Covers

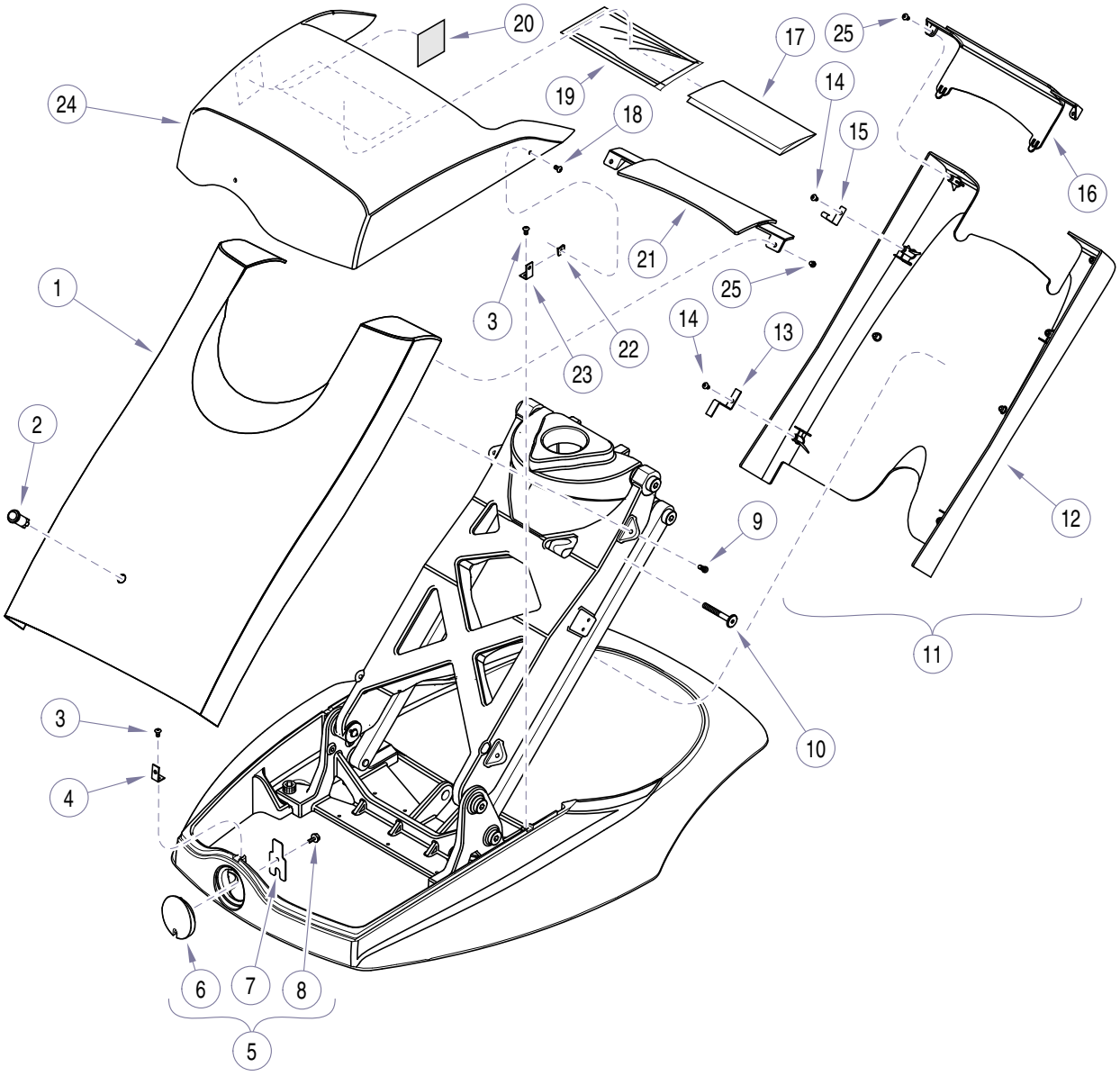

KA942901i

Used on Units with Serial Number NT4240 and NZ1256 thru Present
Used on Units with Serial Number V2200 thru Present

Item	Part No.	Description	Qty
1	123052-01	Lift Arm Cover	1
2		Indicator Light (Refer to “Electrical Components”)	Ref
3	040-0010-109	Screw	3
4	123073	Front Hydraulic Cover Clip	1
5	029-2524-00	Umbilical Plug Assembly (Includes Items 6 thru 8 [Stand-alone Chair only])	1
6	• 123060-03	• Umbilical Plug	1
7	• 050-5394-00	• Umbilical Strap	1
8	• 042-0168-00	• Screw	1
9	116764	Screw	4
10	042-0059-03	Joint Connector Bolt	4
11	002-1711-00	Safety Bail (Includes Items 12 thru 15)	1
12	• 123059-01	• Safety Bail Cover	1
13	• 123087	• Support	2
14	• 040-0008-102	• Screw	4
13	• 123087	• Support	2
14	• 040-0008-102	• Screw	4
15	• 058-0010-00	• Hook Bracket	2
16	123054-01	Small Safety Bail Cover	1
17	003-1246-00	Wiring Diagram - 115V	1
	003-1247-00	Wiring Diagram - 230V	1
18	121980-5	Screw	3
19	016-0882-00	Pouch	1
20	061-0791-00	Fuse Location Label - 115V	1
	061-0807-00	Fuse Location Label - 230V	1
21	123055-01	End Cover	1
22	121972	Tinnerman Nut	3
23	123074	Side Hydraulic Cover Clip	2
24	123051-01	Hydraulic Cover	1
25	040-0008-102	Screw	4

Always Specify Model & Serial Number

Printed in U.S.A.

Base Components

TORQUE LEGEND	
ITEM#	TORQUE
1	80 FT-LBS (108 N•M)
9	33 FT-LBS (45 N•M)
10, 13	55 FT-LBS (75 N•M)

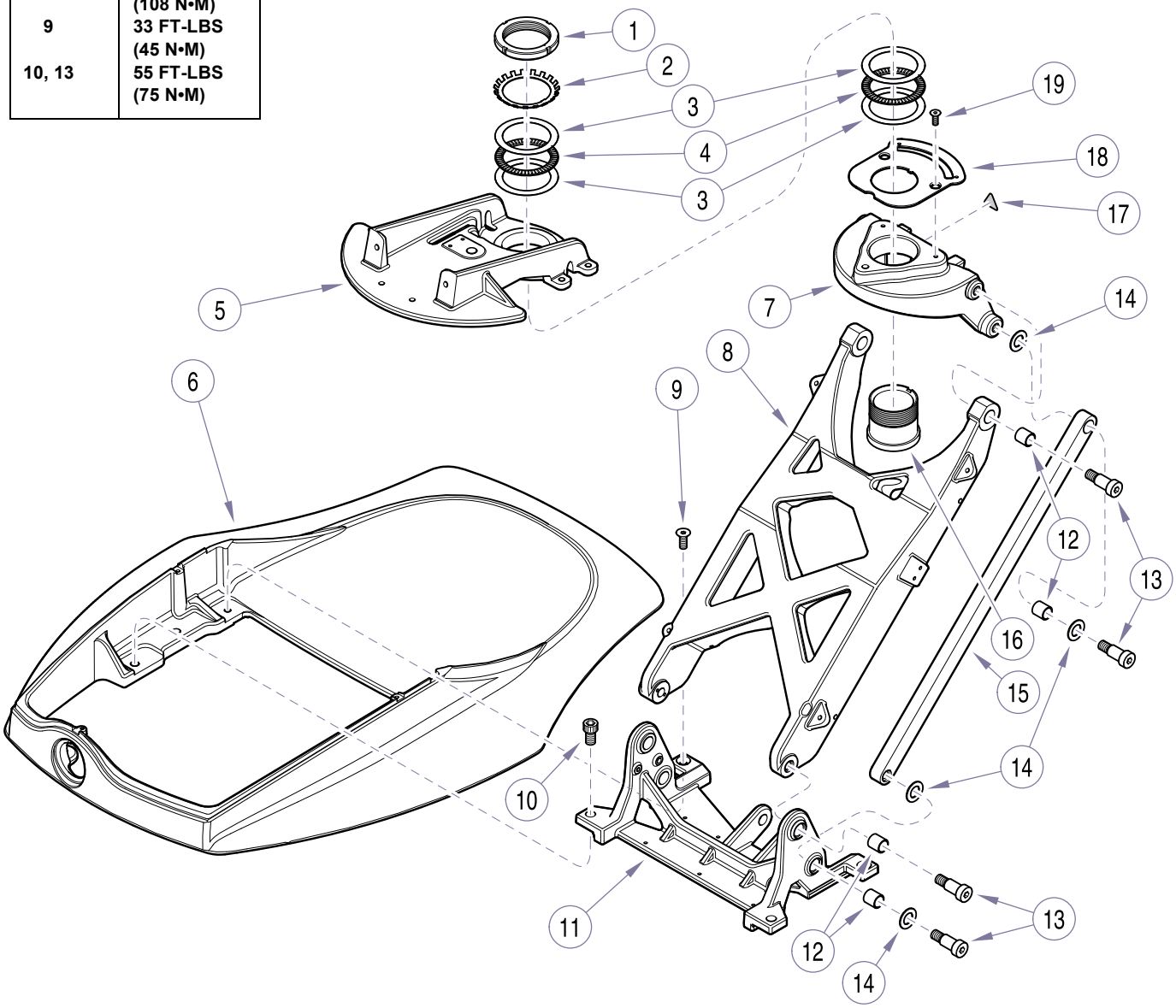

KA951200i

Used on Units with Serial Number NT1000 thru NT4549, NZ1000 thru NZ1261

Item	Part No.	Description	Qty
1	052-0592-00	Locknut w/ hole	1
2	119296	Lock Washer	1
3	119295	Bearing Race	4
4	119297	Bearing	2
5		Chairseat Casting (Refer to “Seat Components”)	Ref
6	*(N.L.A.)*	Base Casting	1
7	123042	Upper Lift Casting	1
8	123044	Lift Arm Casting	1
9	040-0375-45	Screw (apply Loctite #042-0024-00)	2
10	040-0500-27	Screw (apply Loctite #042-0024-00)	2
11	*(N.L.A.)*	Lower Lift Casting	1
12	122973	Bushing	8
13	042-0014-11	Shoulder Screw (apply Loctite #042-0024-00)	8
14	123078	Spacer	8
15	123065	Lower Link	2
16	122854	Rotation Hub	1
17	061-0654-00	Caution Label	1
18		Brake Plate (Refer to “Brake Components”)	1
19	040-0312-08	Screw	2

(N.L.A. denotes “No longer Available”.)

Always Specify Model & Serial Number

Printed in U.S.A.

Base Components

TORQUE LEGEND	
ITEM#	TORQUE
1	80 FT-LBS (108 N•M)
9, 12	55 FT-LBS (75 N•M)

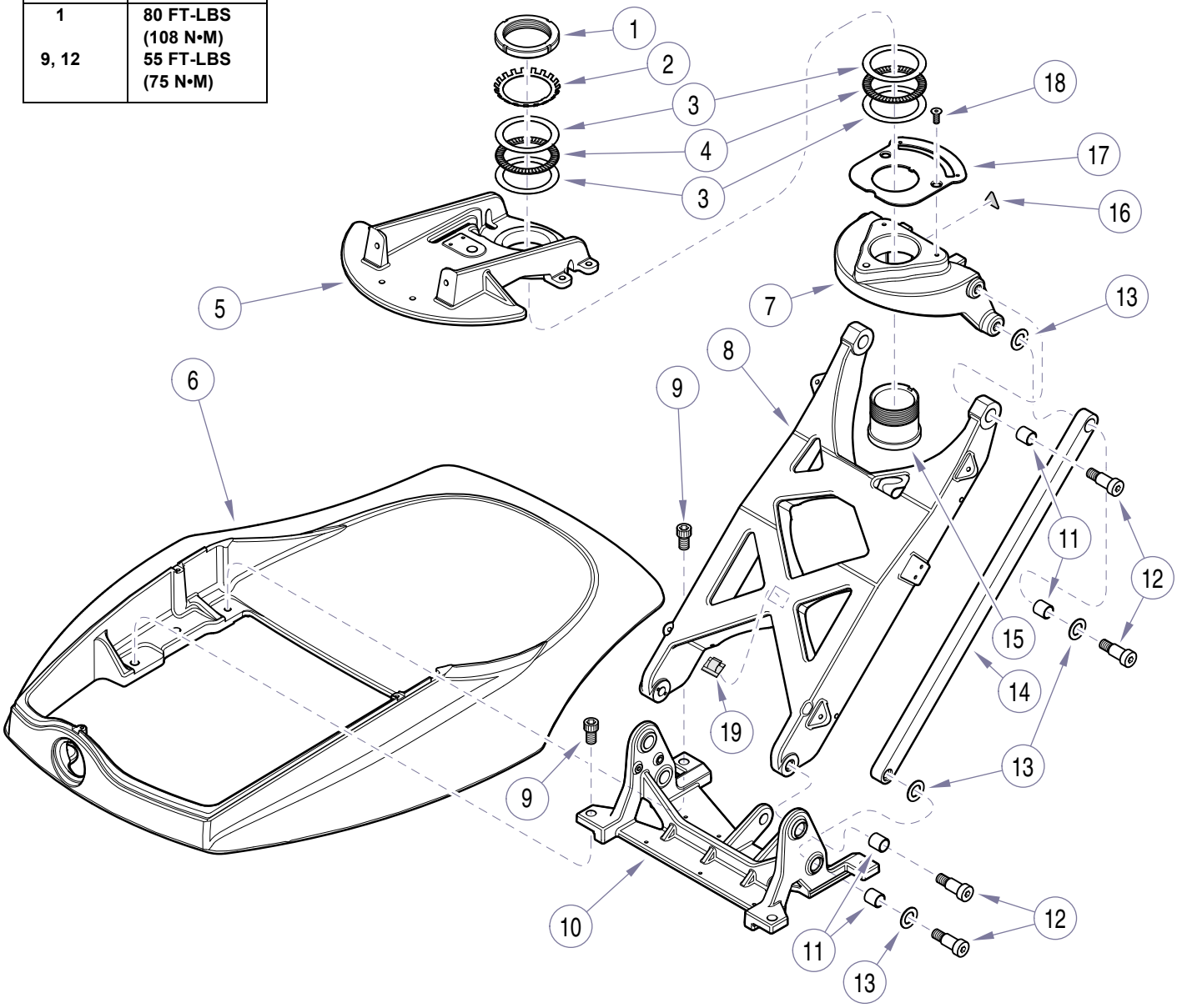

KA951202i

Used on Units with Serial Number NT2048 and NZ1262 thru Present
Used on Units with Serial Number V2200 thru Present

Item	Part No.	Description	Qty
1	052-0592-00	Locknut w/ hole	1
2	119296	Lock Washer	1
3	119295	Bearing Race	4
4	119297	Bearing	2
5		Chairseat Casting (Refer to “Seat Components”)	Ref
6	020-0220-00	Base Casting	1
7	123042	Upper Lift Casting	1
8	123044	Lift Arm Casting	1
9	040-0500-27	Screw (apply Loctite #042-0024-00)	4
10	123043	Lower Lift Casting	1
11	122973	Bushing	8
12	042-0014-11	Shoulder Screw (apply Loctite #042-0024-00)	8
13	123078	Spacer	8
14	123065	Lower Link	2
15	122854	Rotation Hub	1
16	061-0654-00	Caution Label	1
17		Brake Plate (Refer to “Brake Components”)	1
18	040-0312-08	Screw	2
19	109191	Clip, Cord	1

Always Specify Model & Serial Number

Printed in U.S.A.

Go To Table Of Contents

Seat Components

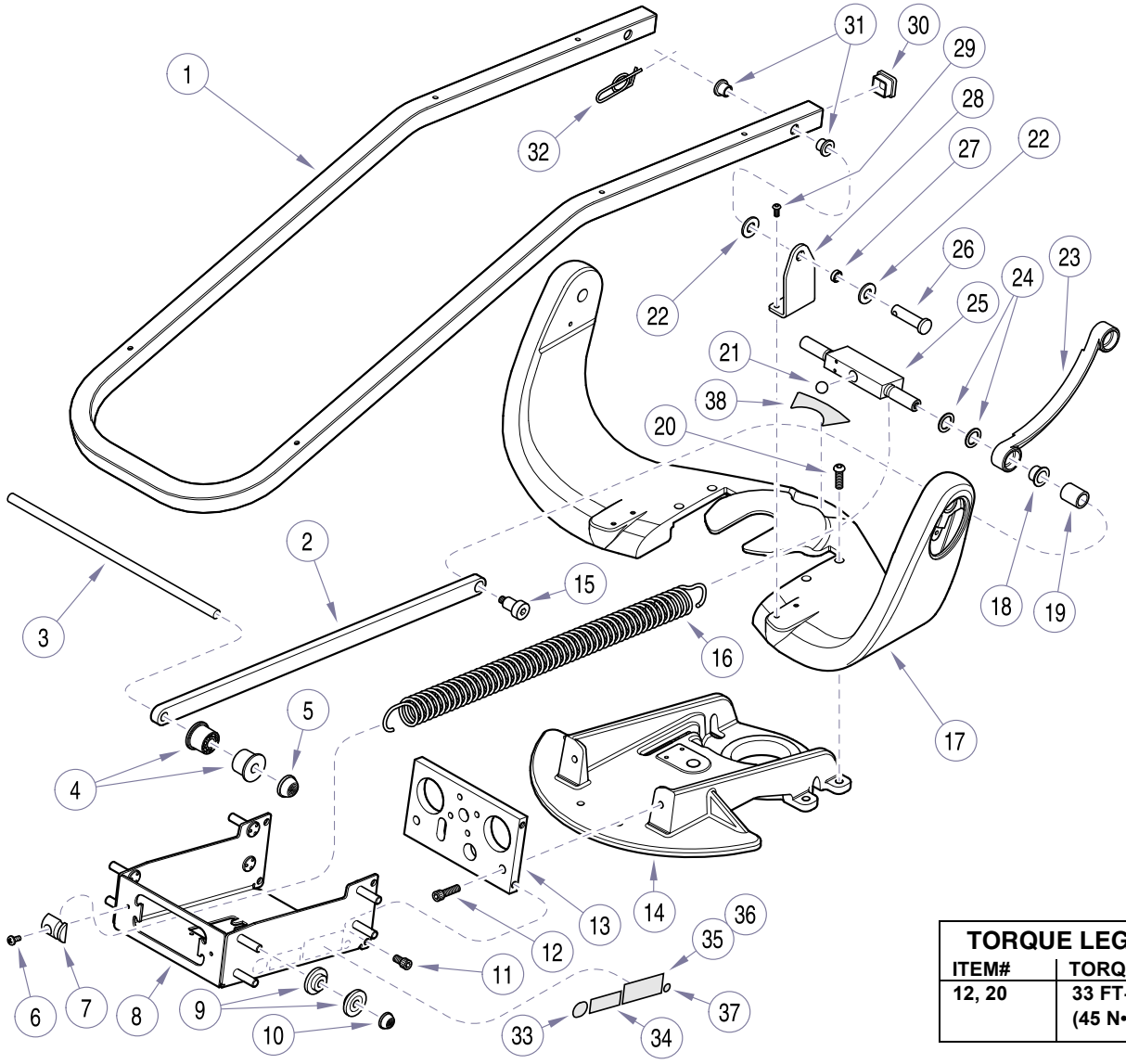

TORQUE LEGEND	
ITEM#	TORQUE)
12, 20	33 FT-LBS (45 N•M)

KA951100

Used on Units with Serial Number NT1000 thru NT2976, NZ1000 thru NZ1164

Item	Part No.	Description	Qty
1	123120	Seat Frame	1
2	123093	Lift Bar	2
3	123092-0	Roller Shaft	1
4	053-1136-00	Seat Roller	4
5	042-0132-01	Push Nut	2
6	040-0010-109	Screw	2
7	053-1128-00	Spring Spacer	2
8	153567	Hydroglide Frame	1
9	053-1137-00	Wheel Half	16
10	121967	Push Nut	8
11	042-0200-01	Screw	4
12	040-0375-17	Screw	2
13	123123	Face Plate	1
14	123045	Chairseat Casting	1
15	042-0200-05	Screw (apply Loctite #042-0024-00)	2
16	123091	Lift Spring	2
17	020-0194-51	Yoke Casting	1
18	123187	Bearing	2
19	123188	Yoke Spacer	2
20	040-0375-70	Screw	4
21	123132	Ball Bearing	1
22	045-0001-49	Washer	4
23	123070	Curved Link	2
24	123145	Bearing Spacer	4
25	030-1284-50	Yoke Block Weldment	1
26	042-0005-18	Clevis Pin	2
27	016-0076-27	Bearing	2
28	050-4896-50	Seat Frame Bracket	2
29	042-0200-08	Screw	4
30	053-1186-00	End Cap	2
31	016-0131-21	Flange Bearing	4
32	042-0063-00	Rue Ring Cotter	2
33	061-0789-00	Duty Cycle Label	1
34	061-0894-00	ETL Label (115 VAC Units Only)	1
35	061-0785-00	Serial Number Label	1
36	061-0666-00	Clear Laminate	1
37	061-0652-00	Type B Equipment Label	1
38	061-0790-00	Lock-Unlock Label	1

Always Specify Model & Serial Number

Go To Table Of Contents

Seat Components

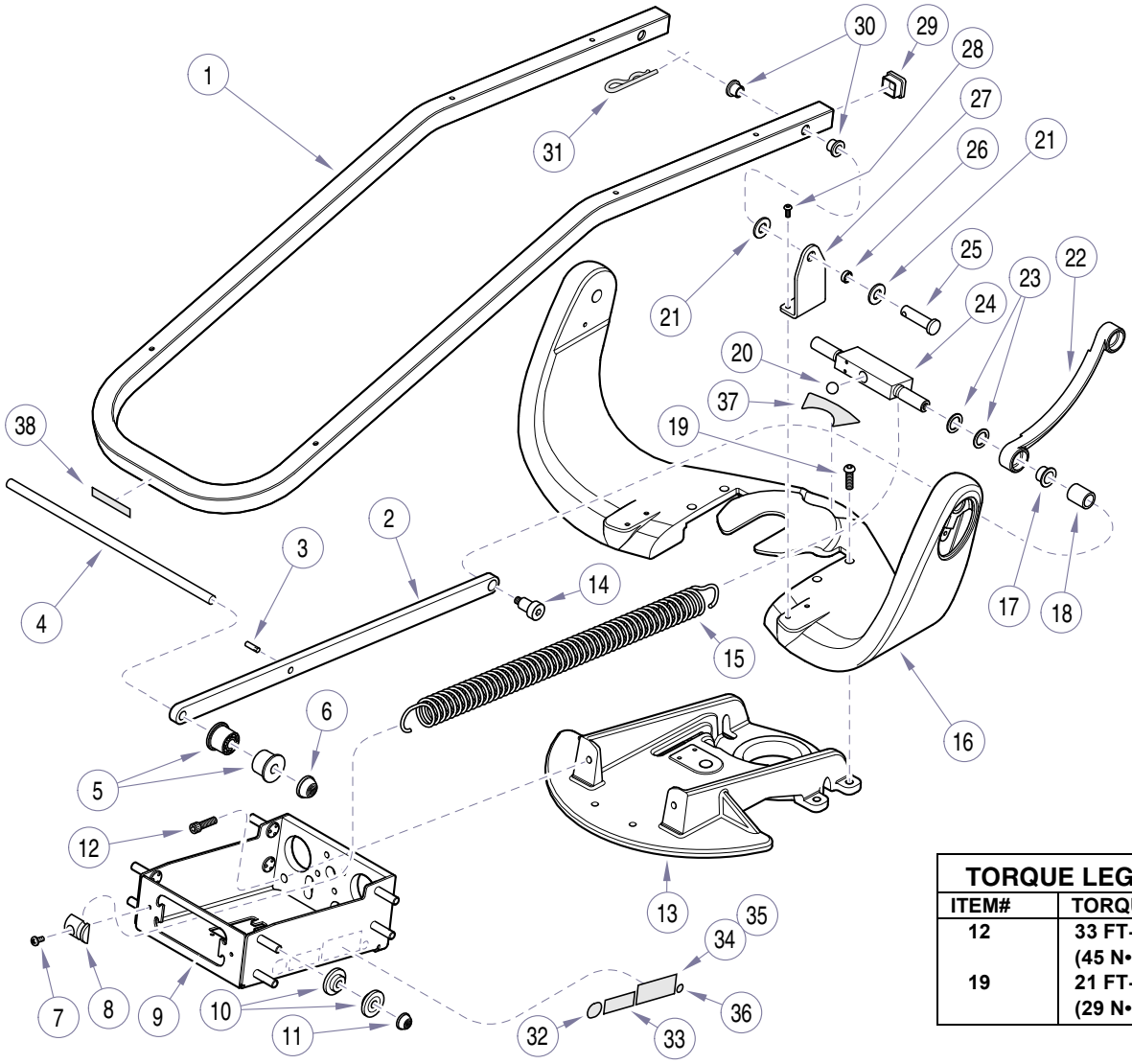

TORQUE LEGEND	
ITEM#	TORQUE)
12	33 FT-LBS (45 N•M)
19	21 FT-LBS (29 N•M)

KA951104i

Used on Units with Serial Number NT2977 and NZ1165 thru Present
Used on Units with Serial Number V2200 thru Present

Item	Part No.	Description	Qty
1	123120	Seat Frame	1
2	051-1013-50	Lift Bar	2
3	042-0067-07	Pin, Groove (1"L x 1/4" D)	1
4	123092-0	Roller Shaft	1
5	053-1136-00	Seat Roller	4
6	042-0132-01	Push Nut	2
7	040-0010-109	Screw	2
8	053-1128-00	Spring Spacer	2
9	030-1415-50	Hydroglide Frame	1
10	053-1137-00	Wheel Half	16
11	121967	Push Nut	8
12	040-0375-17	Screw	2
13	123045	Chairseat Casting	1
14	042-0200-05	Screw (apply Loctite #042-0024-00)	2
15	123091	Lift Spring	2
16	029-2619-00	Yoke Casting	1
17	123187	Bearing	2
18	123188	Yoke Spacer	2
19	040-0375-70	Screw	4
20	123132	Ball Bearing	1
21	045-0001-01	Washer	4
22	123070	Curved Link	2
23	123145	Bearing Spacer	4
24	030-1284-50	Yoke Block Weldment	1
25	042-0005-18	Clevis Pin	2
26	016-1569-13	Bearing	2
27	050-4896-50	Seat Frame Bracket	2
28	042-0200-08	Screw	4
29	053-1186-00	End Cap	2
30	016-0131-21	Flange Bearing	4
31	042-0004-00	Clip, Hitch Pin	2
32	061-0789-00	Duty Cycle Label	1
33	061-1116-00	ETL Label (115 VAC Units Only)	1
34	061-0785-00	Serial Number Label	1
35	061-0666-00	Clear Laminate	1
36	061-0652-00	Type B Equipment Label	1
37	061-0790-00	Lock-Unlock Label	1
38	061-0965-00	Lift Caution Label	1

Always Specify Model & Serial Number

Brake Components

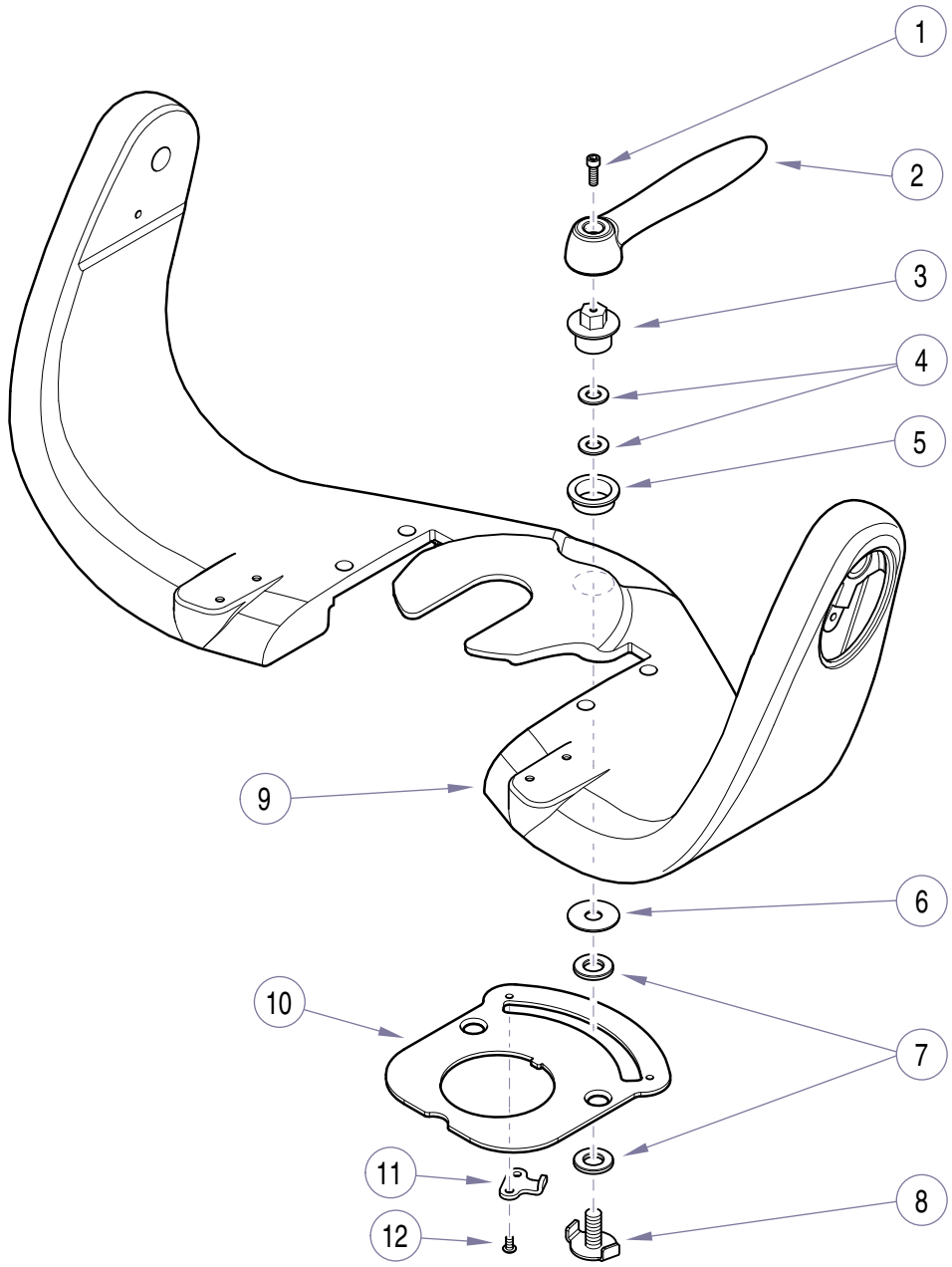

TORQUE LEGEND	
ITEM#	TORQUE)
3	20 FT-LBS (27.1 N•M)

KA948202i

Item	Part No.	Description	Qty
	029-2491-00	Dental Brake Handle Assembly (includes items 1 - 8)	
1	1 040-0010-108	Screw	1
2	123067-50	Rotation Handle	1
3	Only Avaliable by ordering Assembly (Spacer Nut)		
4	045-0001-73	Belleville Washer	2
5	016-0893-00	Flange Bearing	1
	002-0685-00	Bearing Replacement Kit (For units with Serial No. NT001000 thru NT001124)	1
6	045-0001-81	Washer	1
7	016-0886-00	Thrust Bearing	2
8	153579	Rotation Stop Weldment	1
9		Yoke (Refer to “Seat Components”)	1
10	050-4850-01	Brake Plate	1
11	050-4964-50	L/R Rotation Limiter (L/R Units Only)	2
12	040-0010-109	Screw (L/R Units Only)	2

Always Specify Model & Serial Number

Back Components (*Ultra*Comfort ®)

NOTE
To replace *Ultra***Comfort ®** Back Components with *Ultra***Trim** Back Components Kit order Part Number:

- Thermoform Back 002-0892-00-000-xxx
- Ultraleather Back 002-0892-01-000-xxx
- Ultraleather Back (*Seamless*) 002-0892-02-000-xxx

(Replace xxx with a Color Code Number from Color Options Link)

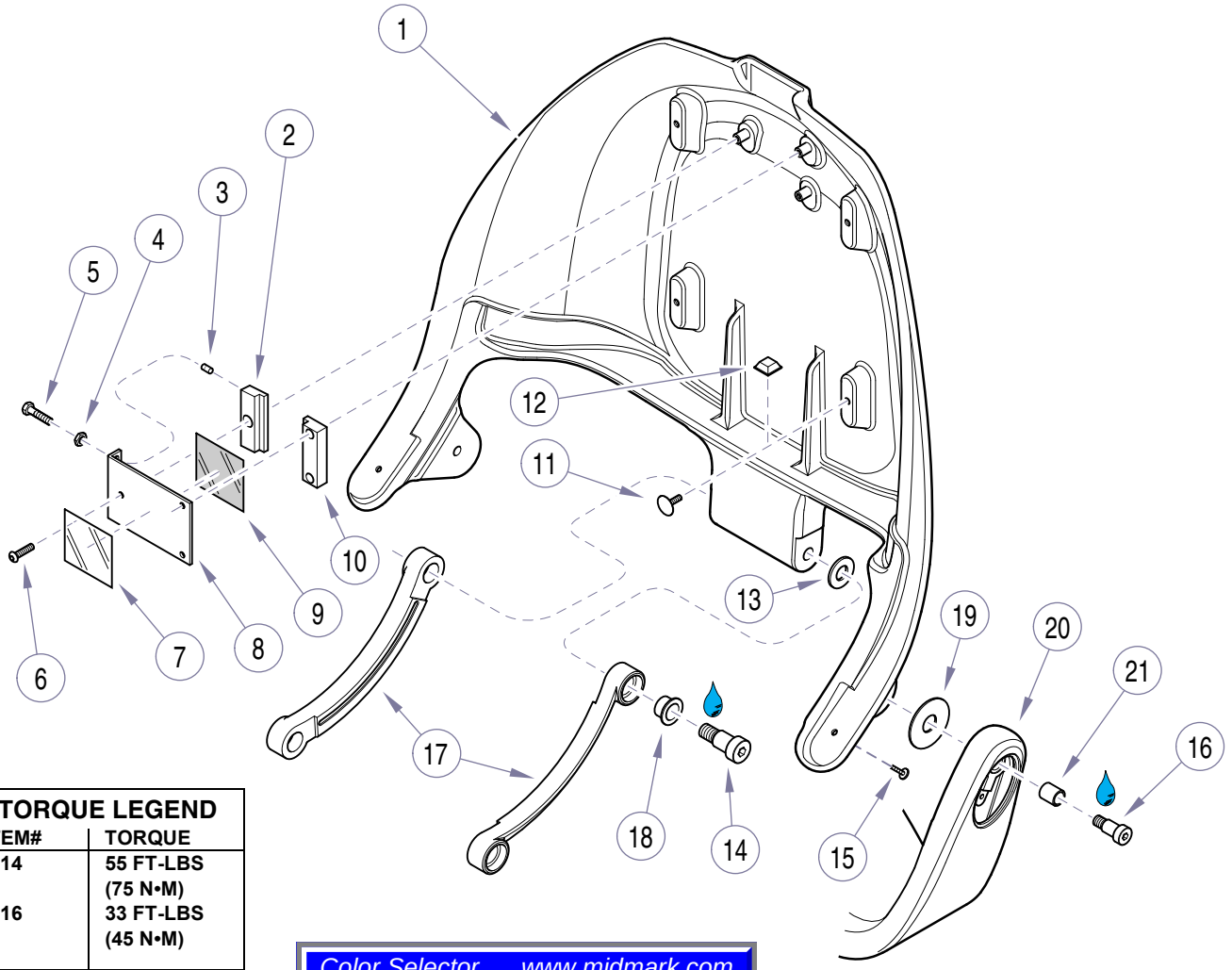

TORQUE LEGEND	
ITEM#	**TORQUE**
14	**55 FT-LBS (75 N•M)**
16	**33 FT-LBS (45 N•M)**

Color Selector.....www.midmark.com

KA947901i

Item	Part No.	Description	Qty
	002-1929-00	Chair Back Assy. Kit (*Ultra***Comfort ®**) Includes Items (1 thru 16)	1
1	•	• Back Casting	1
2	• 120975	• Floating Tang Guide	1
3	• 120976	• Tang Guide Compensator	2
4	• P1215	• Nut	2
5	• 108850	• Screw	2
6	• 040-0010-144	• Screw (#10-32 x 1/2")	3
7	• 121055	• Headrest Adjustment Label	1
8	• 120955-50	• Tang Guide Plate	1
9	• 120981	• Tang Bearing	1
10	• 121943	• Tang Guide Block	1
11	• 122021	• Elevator Bolt	4
12	• 108965	• Bumper *(Used on earlier units)*	1
13	• 123078	• Spacer	2
14	• 042-0200-06	• Shoulder Screw (apply non-permanent threadlock)	2
15	• 042-0059-08	• Bolt	2
16	• 042-0014-16	• Shoulder Screw (apply non-permanent threadlock)	2
17		Curved Link (Ref "Seat" Components)	2
18	123187	Igus Bearing	2
19	053-1121-00	Washer	2
20		Yoke Casting (Ref "Seat" Components)	1
21	016-0830-02	Bearing	2

Always Specify Model & Serial Number

Printed in U.S.A.

Go To Table Of Contents

Back Components (*Ultra*Trim)

NOTE

To replace *Ultra***Trim** Back Components with *Ultra***Comfort ®** Back Components Kit order Part Number:

- Thermoform Back 002-1930-00-000-xxx
- Ultraleather Back 002-1930-01-000-xxx
- Ultraleather Back (*Seamless*) 002-1930-02-000-xxx

(Replace xxx with a Color Code Number from Color Options Link)

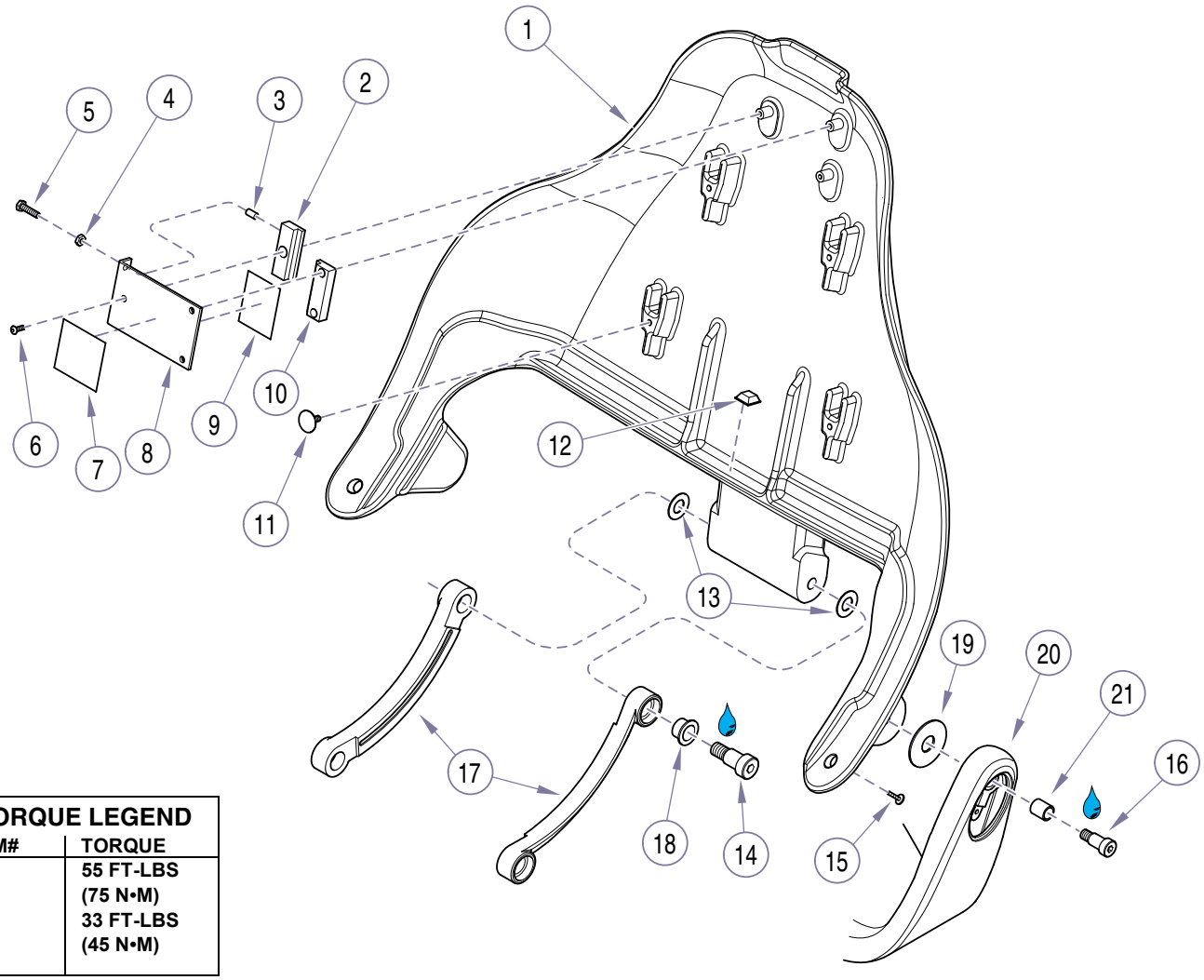

TORQUE LEGEND

ITEM#	TORQUE
14	55 FT-LBS (75 N•M)
16	33 FT-LBS (45 N•M)

DA157600I

Item	Part No.	Description	Qty
	002-0888-00	Chair Thin Back Assy. Kit (*Ultra***Trim**) Includes Items (1 thru 16)	1
1	•	• Back Casting	1
2	• 120975	• Floating Tang Guide	1
3	• 120976	• Tang Guide Compensator	2
4	• P1215	• Nut	2
5	• 108850	• Screw	2
6	• 040-0010-144	• Screw (#10-32 x 1/2")	3
7	• 121055	• Headrest Adjustment Label	1
8	• 120955-50	• Tang Guide Plate	1
9	• 120981	• Tang Bearing	1
10	• 121943	• Tang Guide Block	1
11	• 122021	• Elevator Bolt	4
12	• 108965	• Bumper *(Used on earlier units)*	1
13	• 123078	• Spacer	2
14	• 042-0200-06	• Shoulder Screw (apply non-permanent threadlock)	2
15	• 042-0059-08	• Bolt	2
16	• 042-0014-16	• Shoulder Screw (apply non-permanent threadlock)	2
17		Curved Link (Ref "Seat" Components)	2
18	123187	Igus Bearing	2
19	053-1121-00	Washer	2
20		Yoke Casting (Ref "Seat" Components)	1
21	016-0830-02	Bearing	2

Always Specify Model & Serial Number

Printed in U.S.A.

Hydraulic Components

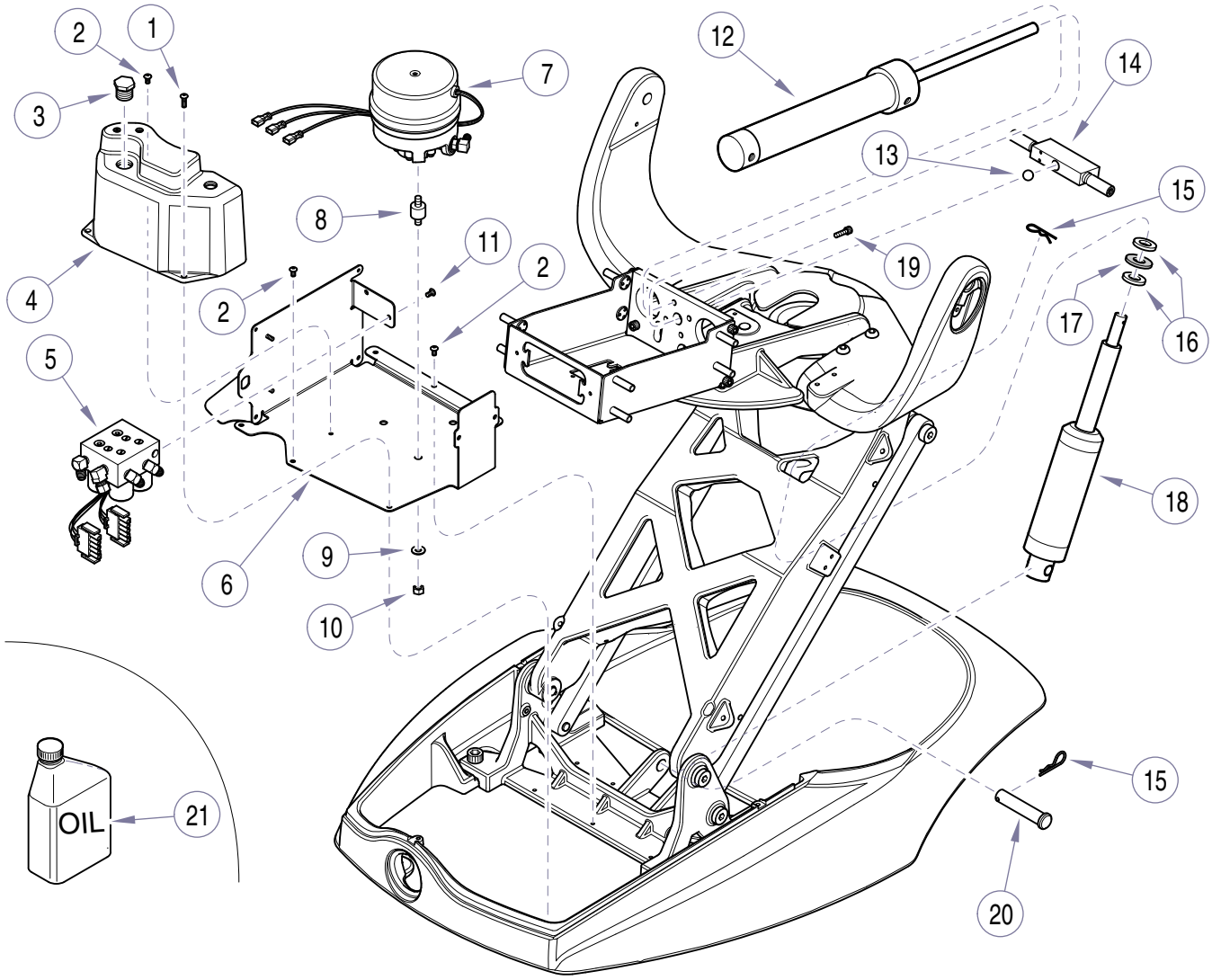

KA950500

Used on Units with Serial Number NT1000 thru NT2047

Item	Part No.	Description	Qty
1	121980-5	Screw	2
2	040-0010-109	Screw	6
3	014-0379-00	Plug	1
4	053-1619-00	Hydraulic Reservoir	1
5	153587	Valve Block Assy - 115V	1
6	030-1287-50	Hydraulic Chassis	1
7	153586	Hydraulic Pump - 115V (Includes Items 8 thru10)	1
8	•	• Spacer	3
9	•	• Washer	3
10	•	• Nut	3
11	040-0010-141	Screw	2
12	123000	Back Cylinder	1
13		Ball Bearing (Refer to "Seat Components")	1
14		Yoke Block (Refer to "Base Components")	1
15	042-0004-01	Hairpin Cotter	2
16	045-0001-102	Washer	2
17	016-0829-00	Lift Cylinder Spacer	1
18	014-0363-00	Lift Cylinder	1
19	040-0250-85	Screw	4
20	042-0005-17	Clevis Pin	1
21	002-0698-00	ISO VG 32 Hydraulic Oil - 32 oz.	1

Always Specify Model & Serial Number

Printed in U.S.A.

Hydraulic Components

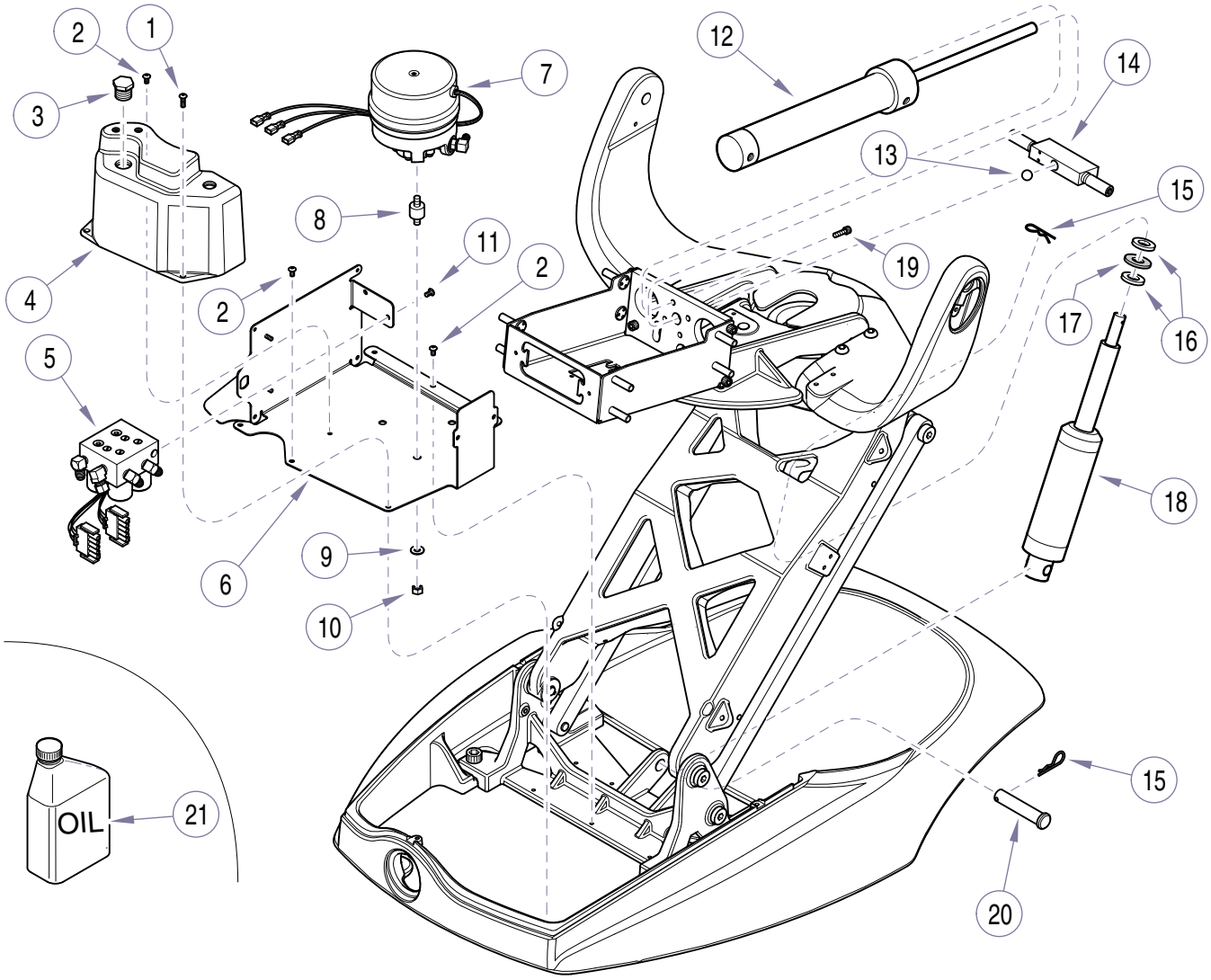

KA950500

Used on Units with Serial Number NT2048 and NZ1000 thru Present
Used on Units with Serial Number V2200 thru V203633

Item	Part No.	Description	Qty
1	040-0010-159	Screw	2
2	040-0010-109	Screw	6
3	014-0379-00	Plug	1
4	053-1619-00	Hydraulic Reservoir	1
5	153587	Valve Block Assy - 115V	1
	014-0396-00	Valve Block Assy - 230V	1
6	030-1287-50	Hydraulic Chassis	1
7	014-0408-00	Hydraulic Pump - 115V (Includes Items 8 thru10)	1
	014-0395-00	Hydraulic Pump - 230V (Includes Items 8 thru10)	1
8	•	• Spacer	3
9	•	• Washer	3
10	•	• Nut	3
11	040-0010-141	Screw	2
12	123000	Back Cylinder	1
13		Ball Bearing (Refer to "Seat Components")	1
14		Yoke Block (Refer to "Base Components")	1
15	042-0004-01	Hairpin Cotter	2
16	045-0001-102	Washer	2
17	016-0829-00	Lift Cylinder Spacer	1
18	014-0363-00	Lift Cylinder	1
19	040-0250-85	Screw	4
20	042-0005-17	Clevis Pin	1
21	002-0698-00	ISO VG 32 Hydraulic Oil - 32 oz.	1

Always Specify Model & Serial Number

Printed in U.S.A.

Hydraulic Components

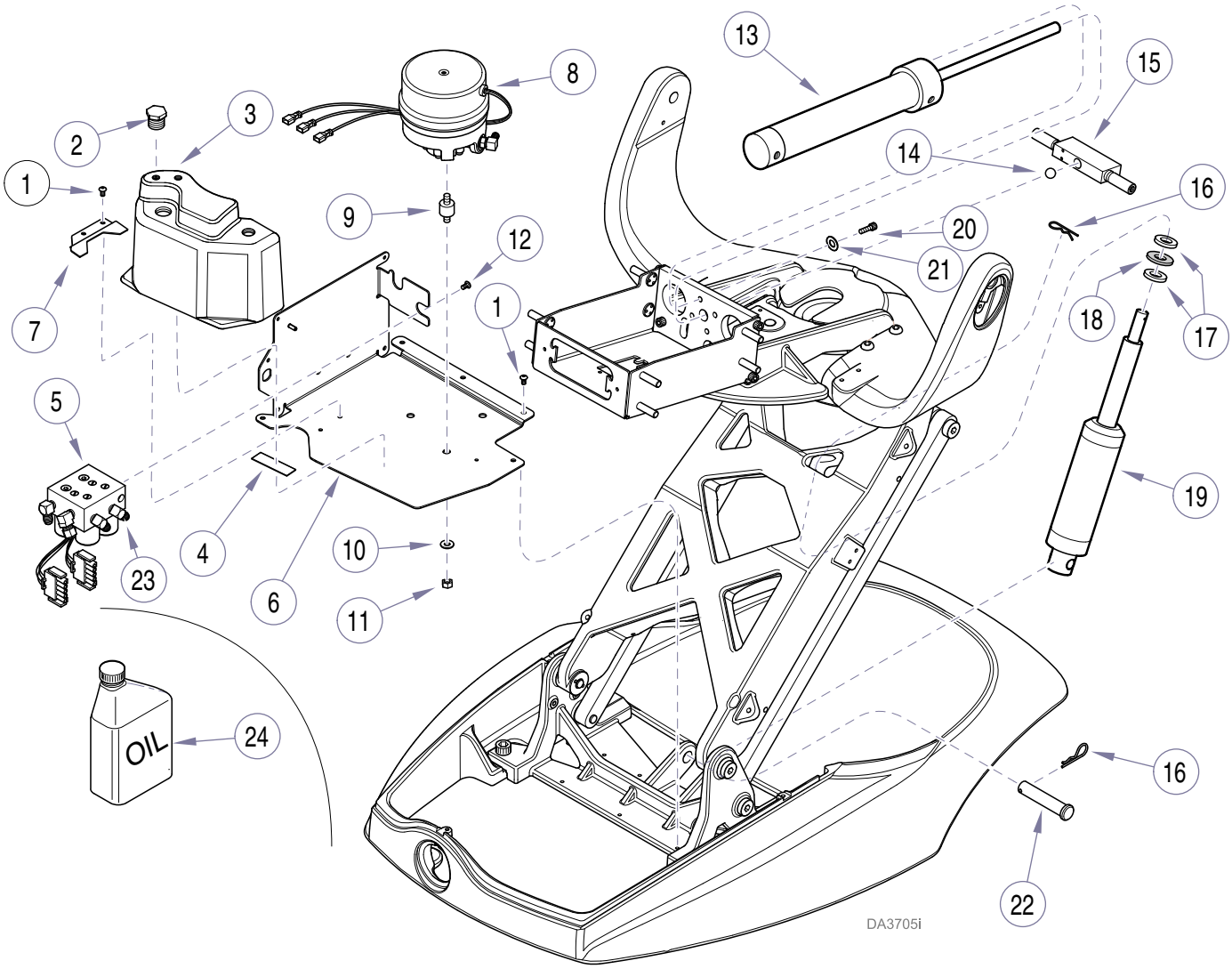

DA3705i

Used on Units with Serial Number V203634 thru Present

Item	Part No.	Description	Qty
1	040-0010-109	Screw	7
2	014-0379-00	Plug	1
3	053-1619-00	Hydraulic Reservoir	1
4	275184	Tape, Double-back	AR
5	153587	Valve Block Assy - 115V	1
	014-0396-00	Valve Block Assy - 230V	1
6	030-2100-00-216	Hydraulic Chassis	1
7	050-6573-00-216	Clamp, Hydraulic Reservoir	1
8	014-0408-00	Hydraulic Pump - 115V (Includes Items 8 thru10)	1
	014-0395-00	Hydraulic Pump - 230V (Includes Items 8 thru10)	1
9	•	• Spacer	3
10	•	• Washer	3
11	•	• Nut	3
12	040-0010-175	Screw	2
13	123000	Back Cylinder	1
14		Ball Bearing (Refer to "Seat Components")	1
15		Yoke Block (Refer to "Base Components")	1
16	042-0004-01	Hairpin Cotter	2
17	045-0001-102	Washer	2
18	016-0829-00	Lift Cylinder Spacer	1
19	014-0363-00	Lift Cylinder	1
20	040-0250-168	Screw	4
21	045-0001-29	Washer, 1/4"	4
22	042-0005-17	Clevis Pin	1
23	053-2109-00	Isolator	2
24	002-0698-00	ISO VG 32 Hydraulic Oil - 32 oz.	1

Always Specify Model & Serial Number

Printed in U.S.A.

Hoses and Fittings

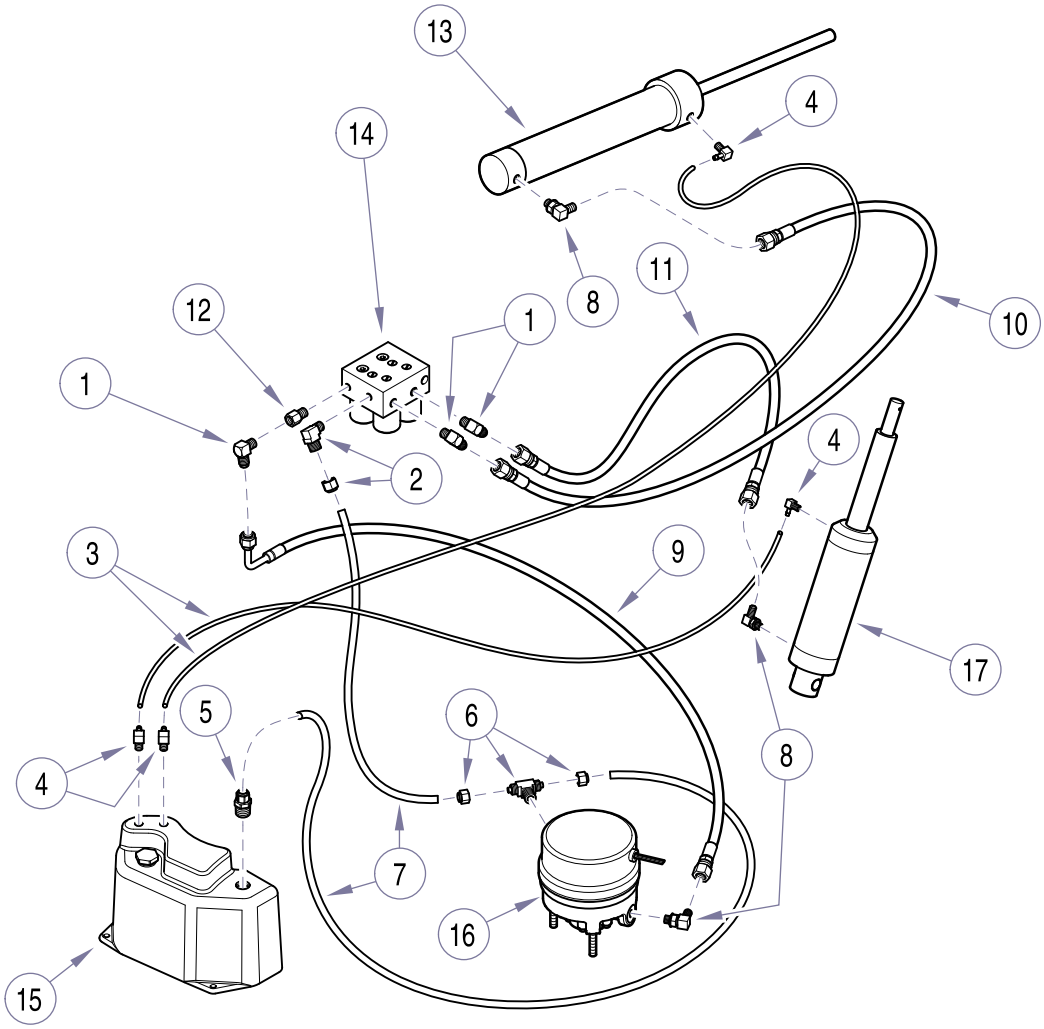

KA948100

Item	Part No.	Description	Qty
1	014-0358-00	Elbow Fitting	3
2	014-0362-00	Elbow Fitting (Incl. Compression Nut)	1
3	177533	Leak Line Hose	5’
4	014-0505-00	Elbow Fitting	4
5	014-0389-00	Straight Fitting	1
6	014-0360-00	Tee Fitting (Includes Compression Nuts)	1
7	275274	Tubing	1.25’
8	014-0173-00	Elbow Fitting	3
9	014-0401-00	Pump Hose	1
10	014-0738-00	Back Cylinder Hose	1
11	014-0737-00	Lift Cylinder Hose	1
12	014-0317-03	Adapter	1
13		Back Cylinder (Refer to “Hydraulic Components”)	Ref
14		Valve Block Assy. (Refer to “Hydraulic Components”)	Ref
15		Hydraulic Reservoir (Refer to “Hydraulic Components”)	Ref
16		Hydraulic Pump (Refer to “Hydraulic Components”)	Ref
17		Lift Cylinder (Refer to “Hydraulic Components”)	Ref

Always Specify Model & Serial Number

Electrical Components

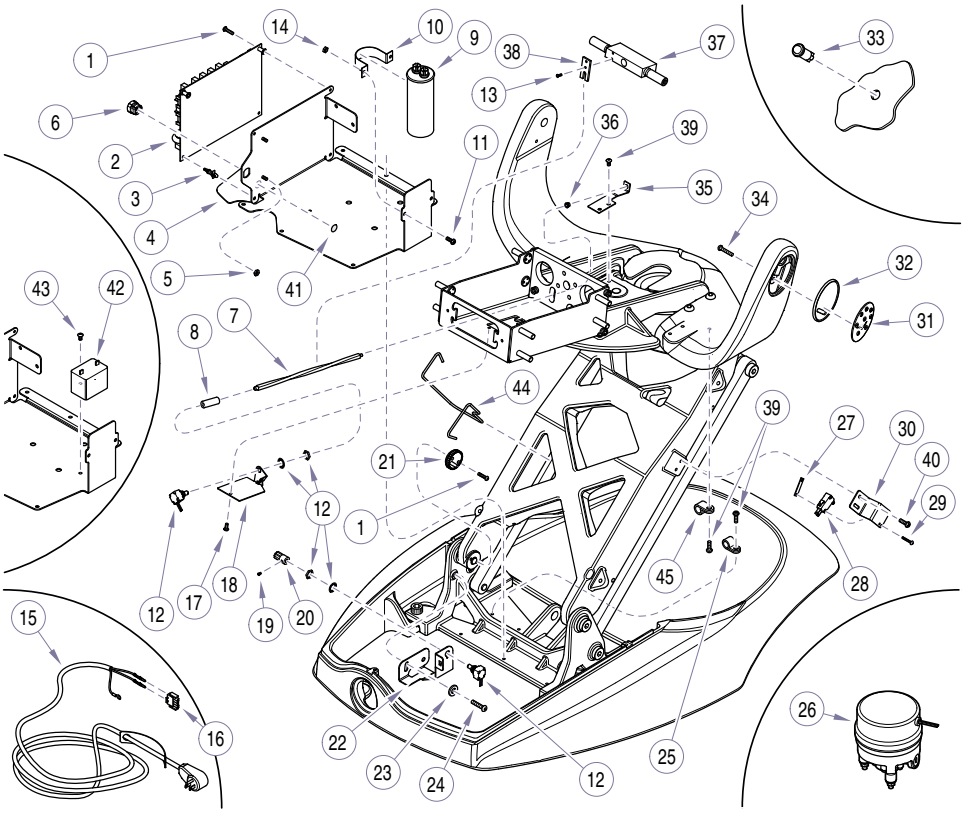

KA951400

Used on Units with Serial Number NT1000 thru NT1598, NZ1000 thru NZ1019

Item	Part No.	Description	Qty
1	040-0008-94	Screw	4
2	015-1397-00	PC Board - 115 VAC	1
	015-1397-01	PC Board - 230 VAC	1
3	119690	Support	2
4		Hydraulic Chassis (Refer to “Hydraulic Components”)	1
5	122358	Nut	2
6	015-0002-00	Cord Restraint	1
7	N/A	Sensor Shaft (No longer available, order kit number 002-0692-00)	1
8	053-1190-00	Coupler	1
9	015-0438-05	Capacitor (115 VAC Only)	1
10	015-0461-00	Capacitor Bracket (115 VAC Only)	1
11	121980-5	Screw (115 VAC Only)	2
12	015-1402-00	Potentiometer (Includes Mtg. Hardware)	2
13	121698-5	Screw	2
14	041-0010-02	Nut	2
15	002-0668-00	9.5’ Power Cord (115 VAC Stand-alone Chair only) (Includes Item 16)	1
	002-0678-00	9.5’ Power Cord (230 VAC Stand-alone Chair only) (Includes Item 16)	1
	002-0668-01	6’ Power Cord (115 VAC Stand-alone Chair only) (Includes Item 16)	1
	002-0678-01	6’ Power Cord (230 VAC Stand-alone Chair only) (Includes Item 16)	1
16	• 015-0590-03	• Jumper Harness Assembly	1
17	040-0010-110	Screw	1
18	050-4835-50	Back Sensor Bracket	1
19	040-0004-00	Screw	1
20	123167	Pinion	1
21	123166	Drive Gear	1
22	123183	Lower Sensor Bracket	1
23	045-0001-29	Washer	1
24	040-0250-13	Screw	2
25	121656	Cable Clamp (Stand-alone Chair only)	1
26		Hydraulic Pump (refer to “Hydraulic Components”)	1
27	4P429	Nut Bar	2
28	122994	Microswitch with Roller	2
29	122806	Screw	4
30	050-4675-50	Safety Bail Switch Bracket	2
31	002-0672-01	RH Touch Pad Kit (incl. item 32) *(not shown)*	1
	002-0672-02	LH Touch Pad (incl. item 32)	1
	002-1858-00	Bezel Cover *(no touch pad - not shown)* (incl item 32)	1
32	• 053-1071-01	• Control Bezel	2
33	015-1401-00	Indicator Light (Mtd. in Lift Arm Cover)	1
34	040-0006-90	Screw	2
35	123139	Outboard Bracket	1
36	016-0878-00	Bearing	1
37		Yoke Block (Refer to “Seat Components”	
38	123143	Sensor Dog	1
39	040-0010-109	Screw	5
40	040-0010-129	Screw	4
41	061-0653-00	Ground Label	1
42		Capacitor (230 VAC Only) (Included with Item 26)	1
43	040-0008-79	Screw (230 VAC Only)	1
44	057-0639-00	Tube and Wire Bail	1
45	121655	Cable Clamp	2

Always Specify Model & Serial Number

Printed in U.S.A.

Electrical Components

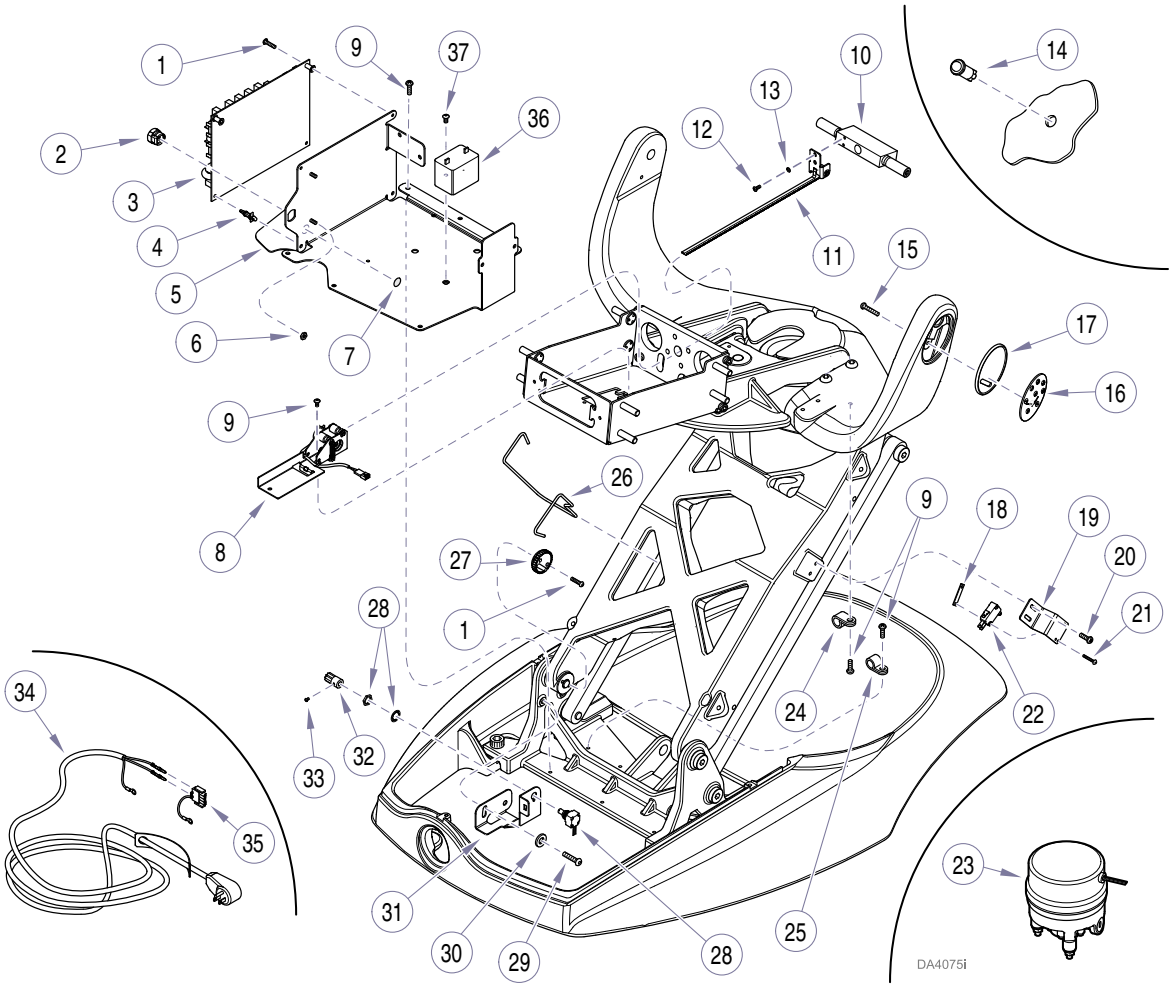

Used on Units with SNs NT1599 thru NT2047, NZ1020 thru NZ1071 & V2200 thru V1314208

Item	Part No.	Description	Qty
1	040-0008-94	Screw	4
2	015-0002-00	Cord Restraint	1
3	015-1397-00	PC Board - 115 VAC	1
	015-1397-01	PC Board - 230 VAC	1
4	119690	Support	2
5		Hydraulic Chassis (Refer to “Hydraulic Components”)	1
6	122358	Nut	2
7	061-0653-00	Ground Label	1
8	029-2736-00	Potentiometer Assy (Includes Item 9)	1
9	040-0010-109	Screw	10
10		Yoke Block (Refer to “Seat Components”	
11	029-2738-00	Gear Rack Assy (Includes Items 12 and 13)	1
12	• 040-0006-97	• Screw	2
13	• 045-0001-79	• Lock Washer	2
14	015-1401-00	Indicator Light (Mtd. in Lift Arm Cover)	1
15	40-0006-90	Screw	2
16	002-0672-01	RH Touch Pad Kit (incl. item 17) *(not shown)*	1
	002-0672-02	LH Touch Pad (incl. item 17)	1
	002-1858-00	Bezel Cover *(no touch pad - not shown)* (includes item 17)	1
17	• 053-1071-00	• Control Bezel	2
18	4P429	Nut Bar	2
19	050-4675-50	Safety Bail Switch Bracket	2
20	040-0010-129	Screw	4
21	122806	Screw	4
22	122994	Microswitch with Roller	2
23		Hydraulic Pump (Ref. Hydraulic Comp.)	1
24	121655	Cable Clamp	2
25	121656	Cable Clamp (Stand-alone Chair only)	1
26	057-0639-00	Tube and Wire Bail	1
27	123166	Drive Gear	1
28	015-1402-00	Potentiometer (Includes Mtg. Hardware)	1
29	040-0250-13	Screw	2
30	045-0001-29	Washer	1
31	123183	Lower Sensor Bracket	1
32	123167	Pinion Gear	1
33	040-0004-00	Screw	1
34	Power Cord (Includes Item 35)		
	002-0668-00	9.5’ (115 VAC Stand-alone Chair only)	1
	002-0678-00	9.5’ (230 VAC Stand-alone Chair only)	1
	002-0668-01	6’ (115 VAC Stand-alone Chair only)	1
	002-0678-01	6’ (230 VAC Stand-alone Chair only)	1
35	• 015-1459-00	• Jumper Harness Assembly	1
36	Capacitor (Included with Item 23)		
	015-1601-00	115 VAC	1
	015-1600-00	230 VAC	1
37	040-0008-79	Screw	1

Always Specify Model & Serial Number

Printed in U.S.A.

Electrical Components

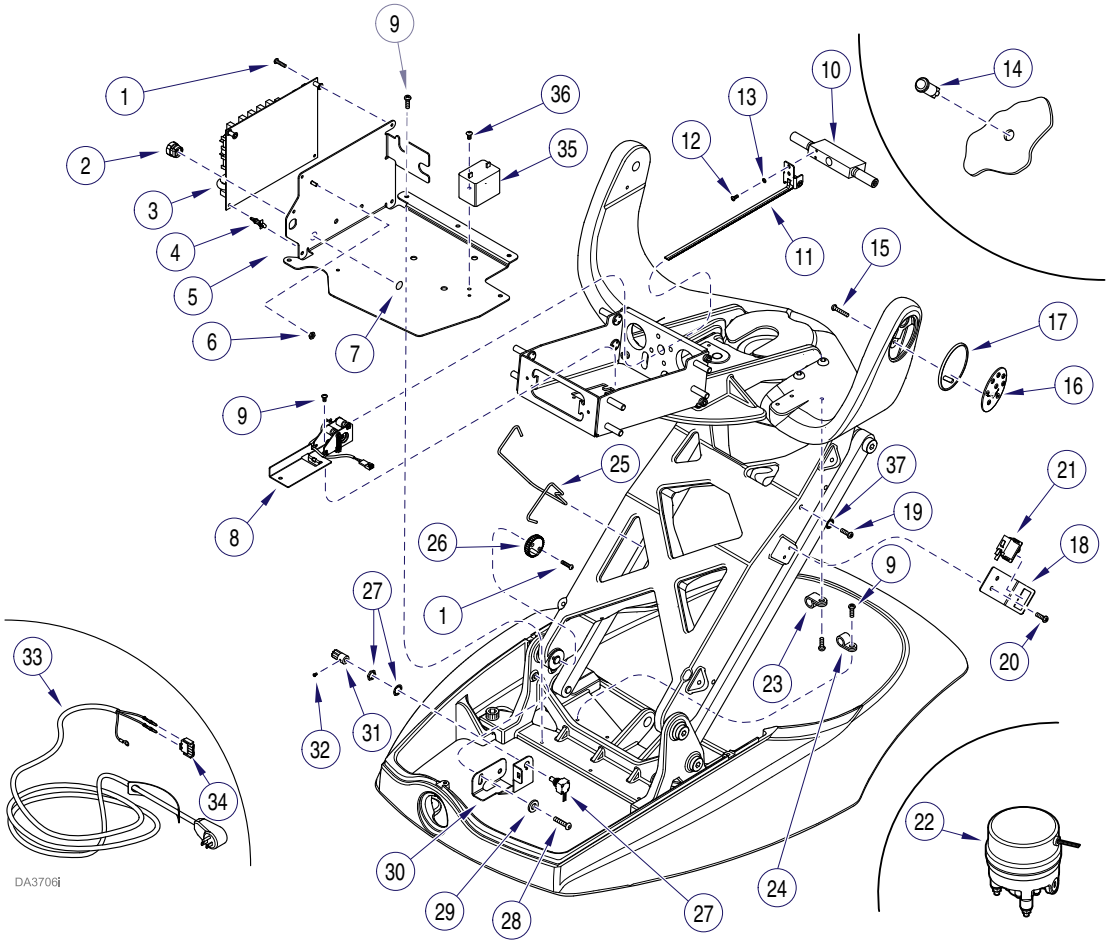

Used on Units with Serial Number NT2048 & NZ1072 thru Present
Used on Units with Serial Number V1314209 thru Present

Item	Part No.	Description	Qty
1	040-0008-94	Screw	4
2	015-0002-00	Cord Restraint	1
3	015-1397-00	PC Board - 115 VAC	1
4	119690	Support	2
5		Hydraulic Chassis (Refer to “Hydraulic Components”)	1
6	122358	Nut	1
7	061-0653-00	Ground Label	1
8	029-2736-00	Potentiometer Assy (Includes Item 9)	1
9	040-0010-109	Screw	10
10		Yoke Block (Refer to “Seat Comp.”	1
11	029-2738-00	Gear Rack Assy (Includes Items 12 and 13)	1
12	• 040-0006-97	• Screw	2
13	• 045-0001-79	• Lock Washer	2
14	015-1401-00	Indicator Light (Mtd. in Lift Arm Cover)	1
15	040-0006-90	Screw	2
16	002-0672-01	RH Touch Pad Kit (incl. item 17) *(not shown)*	1
	002-0672-02	LH Touch Pad (incl. item 17)	1
	002-1858-00	Bezel Cover *(no touch pad - not shown)* (incl. item 17)	1
17	• 053-1071-00	• Control Bezel	2
18	050-8818-00	Safety Bail Switch Bracket	2
19	040-0010-129	Screw	3
20	040-0010-109	Screw	2
21	015-1055-00	Microswitch with Roller	2
22		Hydraulic Pump (Refer to “Hydraulic Components”)	1
23	121655	Cable Clamp	2
24	121656	Cable Clamp (Stand-alone Chair only)	1
25	057-0639-00	Tube and Wire Bail	1
26	123166	Drive Gear	1
27	015-1402-00	Potentiometer (Includes Mtg. Hardware)	1
28	040-0250-13	Screw	2
29	045-0001-29	Washer	1
30	123183	Lower Sensor Bracket	1
31	123167	Pinion Gear	1
32	040-0004-00	Screw	1
33	Power Cord (Includes Item 34)		
	002-0668-00	9.5’ (115 VAC Stand-alone Chair only)	1
	002-0678-00	9.5’ (230 VAC Stand-alone Chair only)	1
	002-0668-01	6’ (115 VAC Stand-alone Chair only)	1
	002-0678-01	6’ (230 VAC Stand-alone Chair only)	1
34	• 015-0590-03	• Jumper Harness Assembly	1
35	Capacitor (Included with Item 23)		
	015-1601-00	115 VAC	1
	015-1600-00	230 VAC	1
36	040-0008-79	Screw	1
37	P14718	Lockwasher	1

Always Specify Model & Serial Number

Printed in U.S.A.

Foot Control

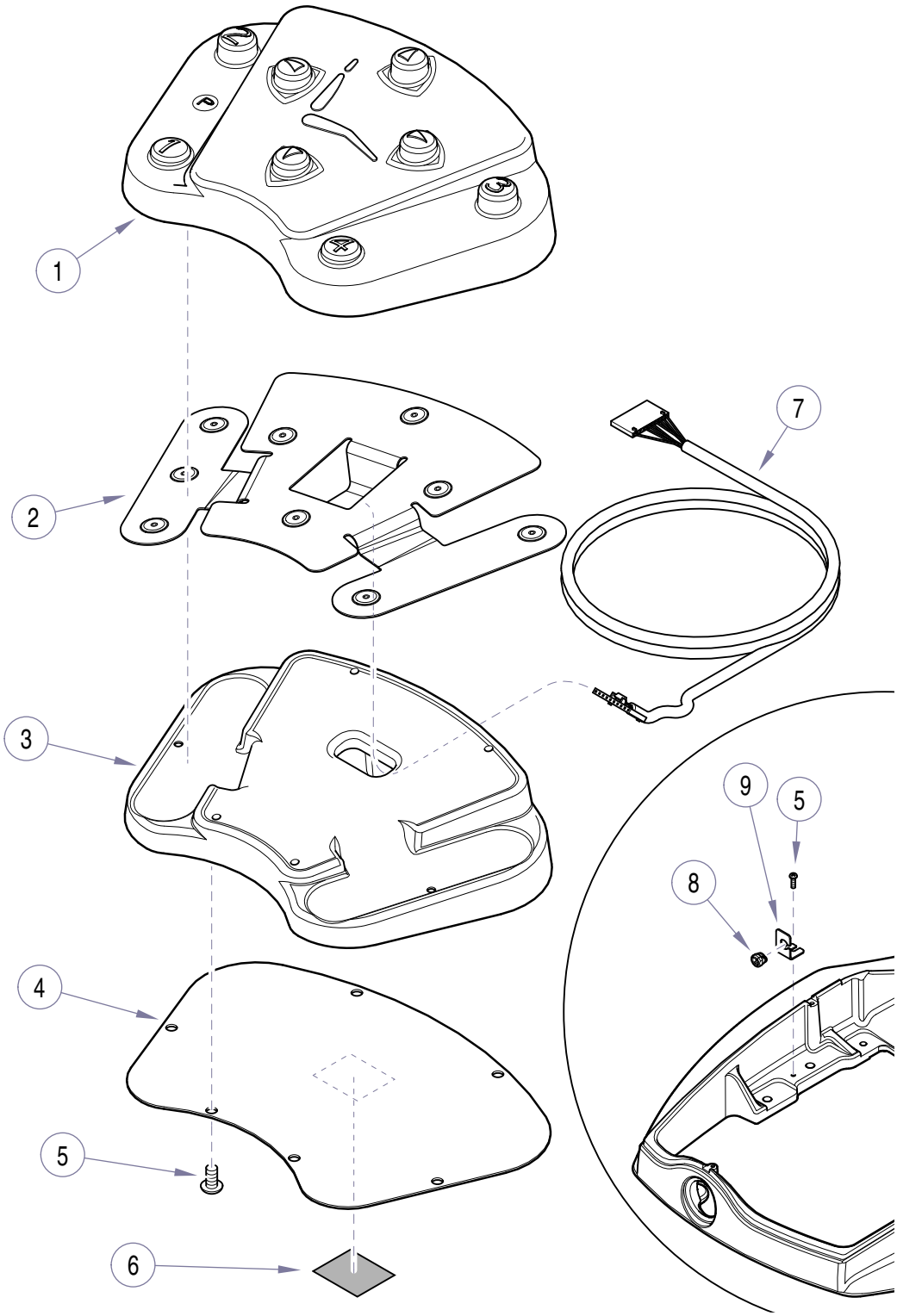

KA942800

Item	Part No.	Description	Qty	Item	Part No.	Description	Qty
	002-0675-00	Foot Control (Includes Items 1 thru 9)	1	5	• 040-0010-145	• Screw	7
1	• 053-1067-00	• Cover	1	6	• 061-0792-00	• IPx1 Footswitch Label	1
2	• 015-2923-00	• Switch Membrane	1	7	• 015-1399-00	• Wire Harness	1
3	• 020-0198-00	• Casting	1	8	• 015-0002-06	• Strain Relief Bushing	1
4	• 050-4749-00	• Cover Plate	1	9	• 050-4921-00	• Cord Restraint Bracket	1

Always Specify Model & Serial Number

Printed in U.S.A.

L/R and Console Components

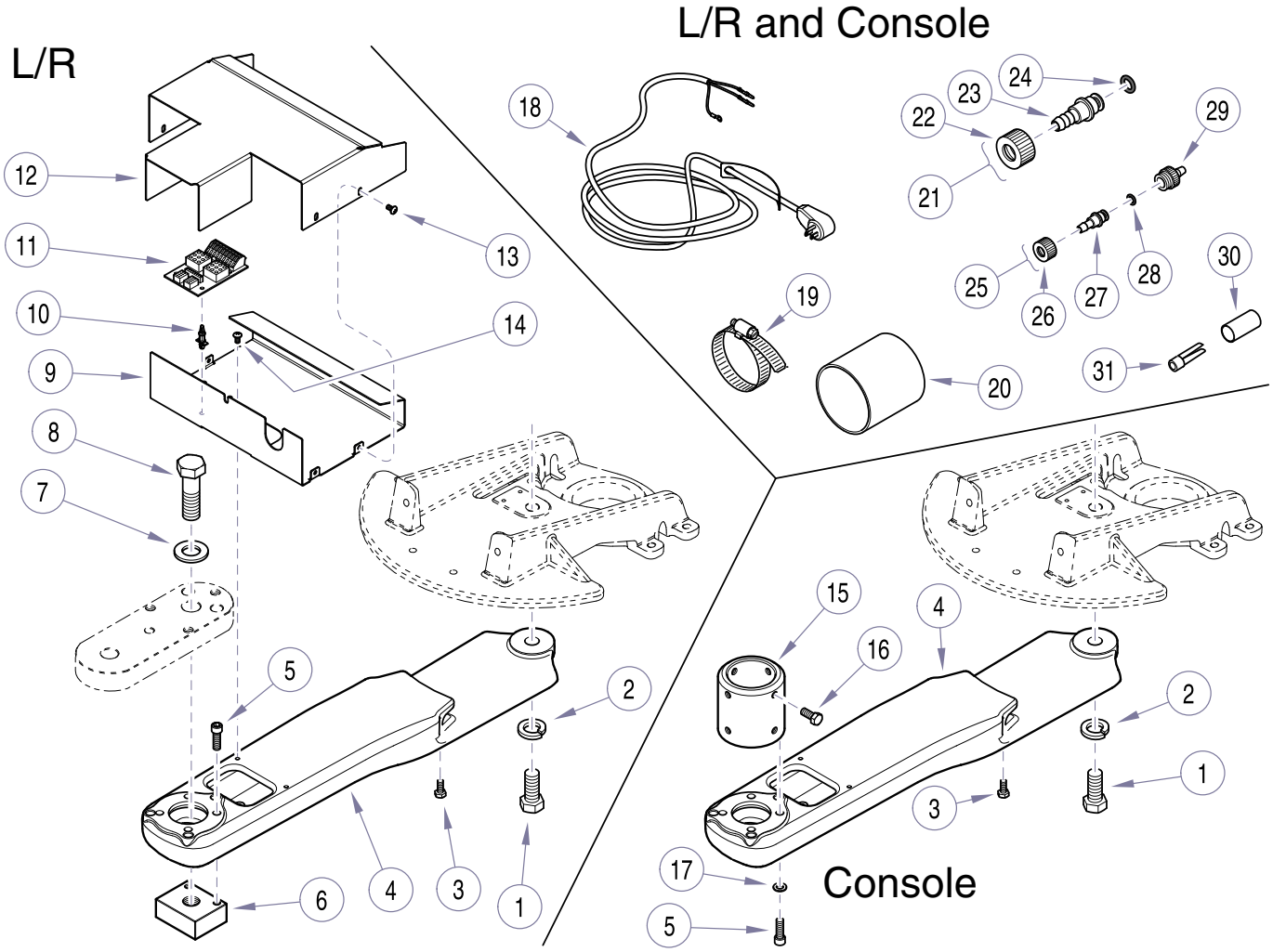

KA962900

Used on Units with Serial Number NT1000 thru NT1920, NZ1000 thru NZ1065

Item	Part No.	Description	Qty
	002-1869-00	L/R Mount Assy (Includes Items 1 thru 14)	1
	002-1866-00	Console Mount Assy (Includes Items 1 thru 5 and 15 thru 17)	1
1	• 040-0625-04	• Screw	1
2	• 045-0001-91	• Lock Washer	1
3	• 122068	• Screw (Apply 042-0024-00 Loctite)	2
4	• 020-0202-51	• Casting	1
5	• 040-0312-41	• Screw (Qty 2 on L/R, Qty 4 on Console [Apply 042-0024-00 Loctite])	4
6	• 050-4920-50	• Nut Plate	1
7	• 122554	• Washer	1
8	• 040-0750-02	• Screw	1
9	• 050-4918-50	• Connection Box	1
10	• 119690	• PC Board Support	4
11	• 015-1458-00	• Unit Connection Board	1
12	• 050-4917-50	• Connection Cover	1
13	• 042-0200-04	• Screw	4
14	• 040-0010-109	• Screw	2
15	• 121762-50•	Leveling Collar	1
16	• 121791	• Bolt (Shown)	8
	• 121795	• Bolt (Not Shown)	8
17	• 045-0001-46	• Washer	4
18	123108-02	Power Cord Assy - 115V	1
	015-1510-02	Power Cord Assy - 230V	1
19	016-0885-00	Hose Clamp	1
20	052-0383-00	Umbilical Support Tube	1
21	029-2540-00	1/4” Male Coupler Assy (Includes Items 25 thru 27)	3
22	• 057-0543-00	• Coupler Nut (1 per assy)	3
23	• 057-0541-00	• 1/4” Male Coupler (1 per assy)	3
24	• 014-0176-44	• O-Ring (1 per assy)	3
25	029-2541-00	1/8” Male Coupler Assy (Includes Items 29 thru 31)	10
26	• 057-0547-00	• Coupler Nut (1 per assy)	10
27	• 057-0545-00	• 1/8” Male Coupler (1 per assy)	10
28	• 014-0176-42	• O-Ring (1 per assy)	10
29	057-0546-00	1/8” Female Coupler	1
30	117480	Sleeve Clamp	3
31	117479	Uni-Clamp	11

Always Specify Model & Serial Number

Printed in U.S.A.

L/R and Console Components

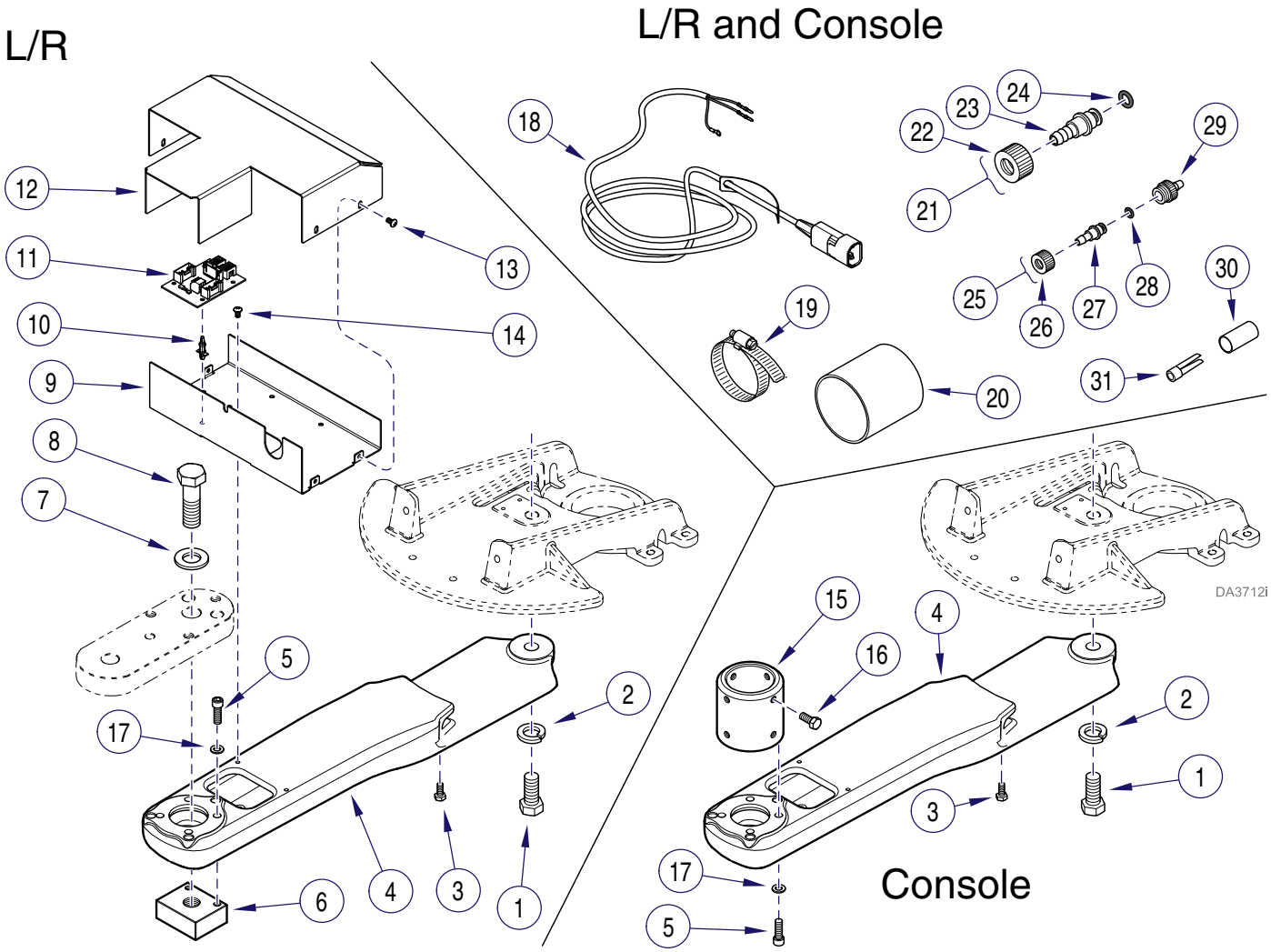

Used on Units with Serial Number NT1921 thru Present, NZ1066 thru Present
Used on Units with Serial Number V2200 - Present

Item	Part No.	Description	Qty
	002-1869-00	L/R Mount Assy (Includes Items 1 thru 14 and 17)	1
	002-1866-00	Console Mount Assy (Includes Items 1 thru 5 and 15 thru 17)	1
1	• 040-0625-04	• Screw	1
2	• 045-0001-91	• Lock Washer	1
3	• 040-0250-186	• Screw (Apply 042-0627-00 Loctite)	2
4	• 020-0202-51	• Casting	1
5	• 040-0312-41	• Screw (Qty 2 on L/R, Qty 4 on Console [Apply 042-0024-00 Loctite])	4
6	• 050-4920-50	• Nut Plate	1
7	• 122554	• Washer	1
8	• 040-0750-02	• Screw	1
9	• 050-5383-50	• Connection Box	1
10	• 119690	• PC Board Support	4
11	• 015-3103-00	• Unit Connection Board	1
12	• 050-5382-50	• Connection Cover	1
13	• 042-0200-04	• Screw	4
14	• 040-0010-109	• Screw	4
15	• 121762-50•	Leveling Collar	1
16	• 121791	• Bolt (Shown)	8
	• 121795	• Bolt (Not Shown)	8
17	• 045-0001-46	• Washer	4
18	015-2240-00	Power Cord Assy	1
19	016-0885-00	Hose Clamp	1
20	052-0383-00	Umbilical Support Tube	1
21	029-2540-00	1/4” Male Coupler Assy (Includes Items 22 - 24)	3
22	• 057-0543-00	• Coupler Nut (1 per assy)	3
23	• 057-0541-00	• 1/4” Male Coupler (1 per assy)	3
24	• 014-0176-44	• O-Ring (1 per assy)	3
25	029-2541-00	1/8” Male Coupler Assy (Includes Items 26 thru 28)	10
26	• 057-0547-00	• Coupler Nut (1 per assy)	10
27	• 057-0545-00	• 1/8” Male Coupler (1 per assy)	10
28	• 014-0176-42	• O-Ring (1 per assy)	10
29	057-0546-00	1/8” Female Coupler	1
30	117480	Sleeve Clamp	3
31	117479	Uni-Clamp	11
32	P14718	Lockwasher (for GND) w/Item 14	2

Always Specify Model & Serial Number

Printed in U.S.A.

Go To Table Of Contents

Remote Mounted Chair Control Kit (UI-

NOTE
For chair controls mounted to delivery unit, refer to delivery unit service and parts manual.

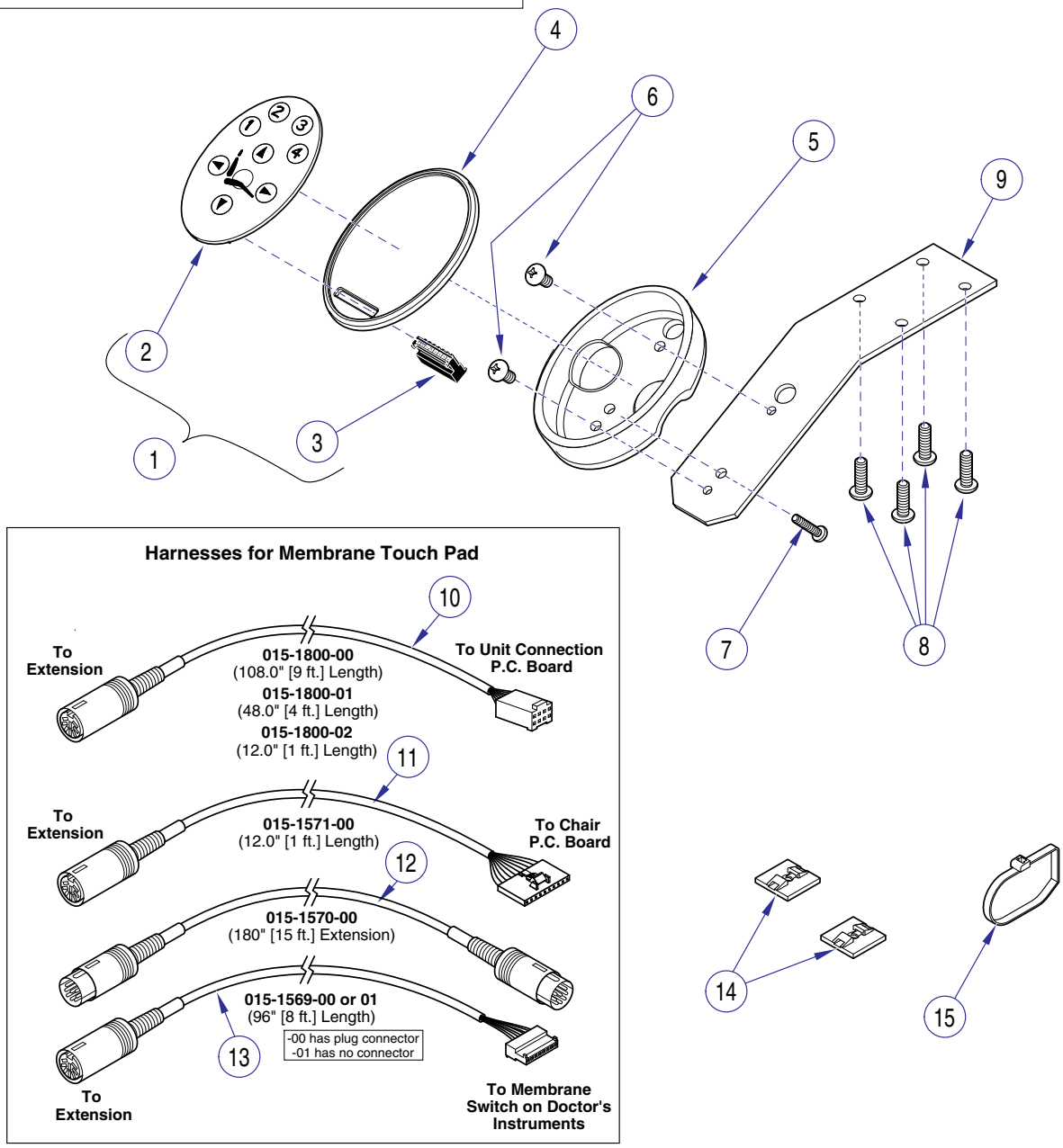

DA108802i

Item	Part No.	Description	Qty
	002-0703-00	Remote Mount Chair Control Kit (includes items 1 - 14)	1
1	• 029-2606-00	• Touch Control Pad (includes items 2 - 4)	1
2	• • 029-4998-00	• • Touch Pad	1
3	• • 015-1324-01	• • IDC Connector	1
4	• • 053-1071-01	• • Control Bezel	1
5	• •053-1208-00	• •Housing	1
6	• •040-0010-109	• •Screw	2
7	• •040-0006-73	• •Screw	1
8	• •040-0010-48	• •Screw	4
9	• •050-5384-50	• •Bracket	1
10	• 015-1800-00	• Wire Harness (108.0" [9 ft.])	1
	• 015-1800-01	• Wire Harness (48.0" [4 ft.])	1
	• 015-1800-02	• Wire Harness (12.0" [1 ft.])	1
11	• 015-1571-00	• Wire Harness (12.0" [1 ft.])	1
12	• 015-1570-00	• Wire Harness (15 ft. Extension)	1
13	• 015-1569-00	Wire Harness (8 ft. w/ connector)	1
	• 015-1569-01	• Wire Harness (8 ft. w/o connector)	1
14	• 123058	• Cable Tie Mtg. Platform	2
15	• 102308	• Cable Tie	2

Always Specify Model & Serial Number

Printed in U.S.A.

Remote Mounted Chair Control

NOTE
For chair controls mounted to delivery unit, refer to delivery unit service and parts manual.

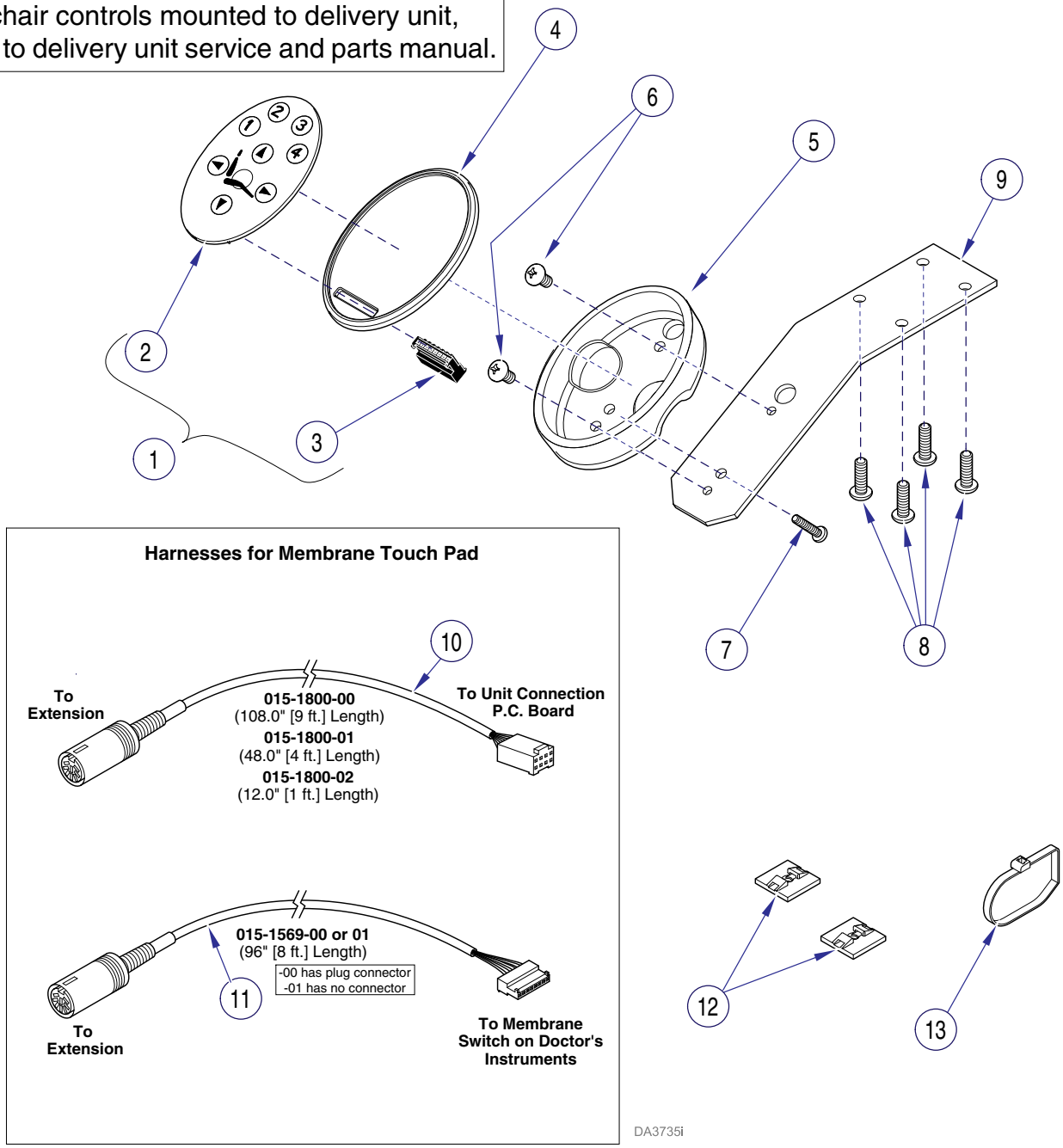

DA108802i

Item	Part No.	Description	Qty
	002-0703-01	Remote Mount Chair Control Kit (includes items 1 - 14)	1
1	• 029-2606-00	• Touch Control Pad (includes items 2 - 4)	1
2	• • 029-4998-00	• • Touch Pad	1
3	• • 015-1324-01	• • IDC Connector	1
4	• • 053-1071-01	• • Control Bezel	1
5	• •053-1208-00	• •Housing	1
6	• •040-0010-109	• •Screw	2
7	• •040-0006-73	• •Screw	1
8	• •040-0010-48	• •Screw	4
9	• •050-5384-50	• •Bracket	1
10	• 015-1800-00	• Wire Harness (108.0" [9 ft.])	1
	• 015-1800-01	• Wire Harness (48.0" [4 ft.])	1
	• 015-1800-02	• Wire Harness (12.0" [1 ft.])	1
11	• 015-1569-00	Wire Harness (8 ft. w/ connector)	1
	• 015-1569-01	• Wire Harness (8 ft. w/o connector)	1
12	• 123058	• Cable Tie Mtg. Platform	2
13	• 102308	• Cable Tie	2

Always Specify Model & Serial Number

Printed in U.S.A.

Go To Table Of Contents

COMMENTS

The Technical Publications Department of Midmark Corporation takes pride in its publications. We are sure that our manuals will fill all of your needs when you are performing scheduled maintenance, servicing, or repairs on a Midmark product.

However, if you find any errors or feel that there should be a change, addition, or deletion to a manual, please let us know!

Page(s) and Paragraph(s) Needing Changed:

Description of Error or Desired Change:

Please fax or mail a copy of this completed comment sheet to:

Midmark Corporation
ATTN: Technical Publications Department
60 Vista Drive
Versailles, Ohio 45380
Fax: (937) 526-5542

Printed in U.S.A.

Go To Table Of Contents

FAX ORDERING FORM

(SERVICE PARTS ONLY)

NOTES:

- ALL BLOCKED AREAS MUST BE COMPLETED.
- USE FOR NON-WARRANTY FAX ORDERS ONLY. WARRANTY ORDERS MUST BE TELEPHONED IN (1-800-MIDMARK).

ATTENTION: SERVICE DEPARTMENT FAX#: 877-249-1793

ACCT #: _____ P.O. #: _____ DATE: _____

NAME: _____

ADDRESS: _____

CITY, ST.: _____

CONTACT: _____

PHONE: _____

SHIP TO: _____

☐ NON-EMERGENCY ORDER - TO SHIP WITHIN 72 HOURS IF PART(S) IN STOCK.

☐ EMERGENCY ORDER - TO SHIP WITHIN 24 HOURS IF PART(S) IN STOCK (IF ORDER IS RECEIVED BEFORE 1:00 P.M. E.S.T).

SEND NOTIFICATION IF PARTS ARE NOT AVAILABLE TO SHIP WITHIN 24 HOURS VIA E-MAIL OR FAX TO: _____

METHOD OF SHIPMENT

UPS	FED EX
☐ NEXT DAY A.M.	☐ NEXT DAY A.M.
☐ NEXT DAY P.M.	☐ NEXT DAY P.M.
☐ 2ND DAY	☐ 2ND DAY
☐ GROUND	☐ ECONOMY

OTHER _____

QTY.	PART #	DESCRIPTION (SPECIFY COLOR OF ITEM IF APPLICABLE)	COLOR CODE	PRICE/PER
			TOTAL COST: $	

Go To Table Of Contents

Go To Table Of Contents

Midmark Corporation
60 Vista Drive
P.O. Box 286
Versailles, Ohio 45380-0286
937-526-3662
Fax 937-526-5542
midmark.com

MIDMARK

Because we care.

Subject to change without notice.
Refer to www.Documark.com for latest revision.

Printed in U.S.A.