Service Manual

AVL COMPACT 1, 2, 3

pH / Bloodgas Analyzer

CH3568
Rev. 2.0, July 1999

Manufactured by:
AVL LIST GmbH MEDIZINTECHNIK
Hans-List-Platz 1
8020 Graz / Austria

Distributed by:

AVL MEDICAL INSTRUMENTS AG
Stettemerstraße 28
8207 Schaffhausen / Switzerland

AVL MEDIZINTECHNIK GMBH
Norsk-Data-Straße 1
Postfach 1142
61281 Bad Homburg / Germany

AVL LIST GMBH MEDIZINTECHNIK
Hans-List-Platz 1
8020 Graz / Austria

AVL SCIENTIFIC CORPORATION
Roswell, Georgia 30077 / USA

Local AVL representative:

First Edition: August 1996

- Important Information! - Important Information! -

This **Service Manual** contains important **warnings and safety** instructions to be observed by the user.

This instrument is only intended for one area of application which is described in the instructions. The most important prerequisites for application, operation and safety, are explained to ensure smooth operation. No warranty or liability claims will be covered if the instrument is applied in areas other than those described or if the necessary prerequisites and safety measures are not observed.

The instrument is only to be operated by qualified personnel capable of observing these prerequisites.

Only accessories and supplies either delivered by or approved by AVL are to be used with the instrument.

Due to this instrument operating principle, analytical accuracy not only depends on correct operation and function, but also upon a variety of external influences beyond manufacturers control. Therefore the test results from this instrument must be carefully examined by expert, before further measures are taken based on the analytical results.

Instrument adjustment and maintenance with removed covers and connected power mains, are only to be performed by a qualified technician who is aware of the dangers involved.

Instrument repairs are only to be performed by the manufacturer or qualified service personnel.

Explanation:

This symbol is located on the inside of the instrument:

"Refer to the Operator's Manual / Service Manuals".

Symbol for instrument type B:

An instrument of the B-type falls under safety categories I, II or III, or has an internal power supply, providing the required insulation against discharge current and reliable ground connections.

- Important Information! - Important Information! -

- Operating Safety Information -

* The instrument falls under Safety Category I.
* The instrument belongs to Type B.
* The instrument is designed as a conventional device (of closed, not waterproof type).
* Do not operate the instrument in an explosive environment or in the vicinity of explosive anesthetic mixtures containing oxygen or nitrous oxide.
* The instrument is suitable for continous operation.

CAUTION:

- The mains plug may be plugged only into a grounded socket. When using an extension cord, make sure it is properly grounded.
- Any rupture of the ground lead inside or outside the instrument or a loose ground connection can render hazardous operation of the instrument. Intentional disconnection of the grounding is not permitted.
- While changing the fuses, make sure that the fuses used, are of the specified type and rating in every case. Never use repaired fuses or short-circuit the fuse holders.

- Operating Safety Information -

CONTENT

1 INTRODUCTION

General information **1-1**

Important information **1-1**

Warnings **1-2**

ESD protective measures **1-3**

2 REVISIONS

Assembly group **2-1**

Software **2-2**

Service manual **2-2**

3 GENERAL DESCRIPTION

Specifications **3-1**

Measurement parameters **3-1**

Input value **3-1**

Calculated values **3-2**

Data management **3-2**

Gas supply **3-2**

Sample data **3-3**

Measurement data **3-3**

Temperature / Humidity **3-3**

Electrical supply **3-3**

Classification **3-4**

Dimensions / Weight **3-4**

Test certificates 3-4

Acoustic Noise Level (mean value) 3-4

Tubing diagram 3-5

Software structure 3-8

4 INSTALLATION / SHUTDOWN

Installation 4-1

Shutdown 4-14

5 MECHANICS

Housing 5-1

Measuring chamber 5-2

Fill port module 5-4

Bottle compartment 5-11

Cover 5-13

KCl pump 5-17

Vacuum pump 5-18

Peristaltic pump 5-19

Gas valve 1 5-19

Gas valve 2 (AVL Compact 2 and 3 only) 5-20

6 ELECTRONICS

Block circuit diagram - electronics 6-1

Power socket 6-4

Power supply 6-4

User interface 6-5

Connector Board 9420C02 (AVL Compact 1 and 2) 6-5

Connector Board 9430C01 (AVL Compact 3) 6-5

Control circuit periphery 6-6

Measuring chamber module 6-6

Filling level detection 6-6

C2-Connector Board 9420C01 (AVL Compact 1 SN >1000, AVL Compact 2 and 3) 6-7

Wiring diagram 6-8

COBA Control Board 9430L01 6-10

Interface Board 9410L02 (AVL Compact 2 SN <1500 and AVL Compact 3) 6-19

Interfaces 6-20

Telelink 6-24

Barcode scanner 6-26

Datalink 6-30

7 TEST PROGRAMS

Electrodes 7-1

Contact path 7-7

Interface 7-10

Pumps 7-11

Valves 7-12

ADC 7-13

Display test 7-20

Printer test 7-20

Program version 7-21

Automatic selftest 7-21

Service 7-22

8 ADJUSTMENTS

Summary **8-1**

Pressure of KCl pump **8-7**

Reference voltage **8-7**

Enter and confirm characteristic values **8-8**

Measuring chamber temperature **8-9**

Sample inlet path temperature **8-11**

Contact path and filling levels **8-13**

Baro **8-19**

Serial number **8-20**

O_2-Zero point (AVL Compact 1 only) **8-21**

Accept values **8-22**

Check time/date **8-22**

pH-Offset (AVL Compact 1 only) **8-23**

Correlation (AVL Compact 2 and 3 only) **8-24**

Service device - electrode simulator GD0124 ..... **8-28**

Service device - reference resistors (equivalent circuit) **8-30**

Summary **8-32**

9 TROUBLESHOOTING / MAINTENANCE

Troubleshooting **9-1**

Maintenance **9-18**

Care and maintenance of remembranable pH / Blood gas electrodes **9-37**

10 ELECTRONIC DIAGRAMS

COBA Control Board (AVL Compact 1 and 2 from SN 1500 on and AVL Compact 3)..... 10-1

C2-Connector Board
(AVL Compact 1, 2 and 3, with the exception of AVL Compact 1 up to SN 1000) 10-12

Connector Board (AVL Compact 1 and AVL Compact 2 from SN 1500 on) 10-14

Connector Board (AVL Compact 3).....10-16

Interface Board (AVL Compact 3, option at AVL Compact 2 only up to SN 1500).....10-18

SI-Board (AVL Compact 1 from SN 1500 on) 10-20

SI-Board (AVL Compact 2 from SN 1500 on and AVL Compact 3) 10-22

Hall Switch (AVL Compact 1, 2 and 3, with the exception of AVL Compact 1 up to SN 1000).....10-24

MC-Board 10-26

Appendix (old revision levels) 10-28

COBA Control Board (AVL Compact 1, SN 1001 up to 1500 and AVL Compact 2 up to SN 1500) .10-29

COBA Control Board (AVL Compact 1 up to SN 1000).....10-40

Connector Board (AVL Compact 1 from SN 1001 to SN 1500 and AVL Compact 2 up to SN 1500) 10-48

SI-Board (AVL Compact 1 up to SN 1500 and AVL Compact 2 up to SN 1500) 10-50

1 INTRODUCTION

General information **1-1**

Important information **1-1**

Warnings **1-2**

ESD protective measures **1-3**
Explanation of the Phenomenon 1-3
Impact of static electricity on assemblies 1-3
Why is ESD protection so important today 1-3
How can ESD protection be ensured? 1-4
Conclusion 1-4

1 Introduction

General information

This Service Manual includes all information and data necessary for repair and maintenance of the AVL COMPACT.
In order to fully understand the described procedures in this manual, it is necessary to be familiar with the manner of function and handling of the analyzer. This information can be obtained from the Operator's Manual.
Proper functioning of the AVL COMPACT can only be ensured when maintenance and repairs are performed, according to the procedures described in this Service Manual. The use of original AVL parts and suggested materials is also necessary.
The order numbers of spare parts are located in the spare part list.
Chapter 2 of this Manual includes a summary of all mechanical or electronic modifications, as well as available software versions.

Important information

Information in this manual marked "**NOTE**", describes situations or hazards which can damage or cause malfunctioning of the analyzer.

- Use a stable, level working environment (max. ± 1 degree inclination when bottles are inserted).
- Prevent vibrations, direct sunlight and strong electromagnetic fields (Electromotors, transformers, x-ray devices, immediate vicinity of mobile telephones.....).
- Allow approx. 20 cm (8 inch) space around the analyzer for air circulation and supply (gas, electrical supply).
- Ambient temperature: +15 °C to + 32 °C (59 °F to 90 °F)
- Relative humidity: 20 - 90%
- The power supply must be between 100 - 240 V AC.
- Only use damp tissue or cotton swabs to clean the analyzer.
- Complete service and repair tasks as described in this manual. Improper service and repairs can result in loss of warranty rights.
- Only use proper tools and test facilities for service and repairs.
- Replace damaged fuses with approved or original types only.

Warnings

Warnings in this Manual are marked with "**CAUTION**" and describes situations or potential dangers which can be hazardous for persons doing maintenance or service tasks.

- Never use the analyzer near easily flammable or explosive gases (e.g. anaesthesic gases etc.).
- Always connect the analyzer to a grounded 2-pole socket.
- Replace immediately a damaged power plug or cable.
- Before opening the rear wall, turn off the analyzer and unplug the main cable.
- Components of the AVL COMPACT such as tubes, Waste container, Fill port etc. contain biological substances after use, resulting in potential sources of infection. Handle these components with care and avoid contact with the skin.
  Use plastic gloves.

ESD protective measures

Components sensitive to electrostatic discharge (ESD).
Packages with this label should be opened by trained personnel only.

Explanation of the Phenomenon

Friction of 2 insulators produces triboelectricity on the surface of the insulators (physical phenomenon of charge separation).

Examples:

- Shoes with rubber soles:
  Walking causes friction. Person is charged via ground. Touching an object (e.g. door handle) causes a discharge.
- Synthetic clothing:
  Spark discharge is audible and visible in the dark.

The drier the air, the stronger the frictional electricity. In humid air, especially when saturated with water vapor, generation of static electricity is generally low. Thus, generation of ESD phenomena is especially strong during the winter months (Northern Hemisphere), in centrally heated rooms with low humidity.

Impact of static electricity on assemblies

When an electrostatically charged person touches an assembly, a discharge may occur via the pins of an IC or semiconductor component. The resulting voltages may cause damage to the component, if this charge is discharged to ground (e.g. if the component is connected to power and to protective ground; this can happen, even if the device is turned off as long as it is connected to power). Critical situations occur during repair or testing of components, if the latter are placed on a more or less conducting surface (e.g. table top) and are touched by a ”charged” person. Again it is possible that the charge is discharged via a critical pin.

Why is ESD protection so important today

In the past, current-control semiconductors (TTL, normal transistor, etc.) were used predominantly.
Today the principle of voltage control in MOS, CMOS components is used practically exclusively. The voltages generated by ESD (up to several kV) destroy sensitive inputs and cause damage.
In addition, with continuously decreasing distances within the ICs, with thinner internal connections, continuously decreasing maximum permissible input voltages, the effects of possible discharges become more and more critical.

How can ESD protection be ensured?

All personnel working with electronic assemblies should continously discharge themselves. This can be done by observing the following measures (these guidelines apply particularly to work on the components, since this involves touching the pins; e.g. on MOS transistors, a protective ring connecting all pins must be removed after soldering).

- ESD wrist bands should be worn (special wrist bands connected to protective ground).
- Repair and testing of assemblies should be performed only on tables with ESD mats[1].
- Components should be touched only at the edges (e.g. like a photograph).
- Assemblies should be transported in ESD packaging[1] or corresponding storage/transport containers[1] (use original packaging!).
- Avoid wearing shoes with rubber soles or synthetic clothing in work shops where electronic components are repaired.
- If needed, use humidifiers to provide optimal humidity.
- Assemblies or components should not be touched by hand after completion of testing.
- Assemblies or components returned for repair must be packaged in ESD packaging to avoid additional damage which could lead to a mis-interpretation of the original error source.

Conclusion

Of course, not all printed circuit boards or electronic assemblies must be handled as critical components. An electronic board containing only plug-in connectors does not require ESD packaging.
If in doubt, please observe ESD protective measures.

[1] These are materials with a very low defined conductivity (10^{12} Ohm). These materials will not generate triboelectricity and the component will not be damaged.

2 REVISIONS

Assembly groups **2-1**

Software **2-2**

Service manual **2-2**

2 Revisions

Revision level changes for improvement of quality are subject to change without prior notice.

Assembly groups

C1V1	COMPACT 1 Version 1 (serial number < 1000)
C1V2	COMPACT 1 Version 2 (serial number 1001 to 1500)
C1V3	COMPACT 1 Version 3 (serial number > 1500)
C1G	COMPACT 1 with graphic display (serial number > 0100)
C2V1	COMPACT 2 Version 1 (serial number < 1500)
(C2V2)	COMPACT 2 Version 2 (hardware is identical with C2V1, only software update)
C2V3	COMPACT 2 Version 3 (serial number > 1500)
C3	COMPACT 3 (serial number > 0100)
C3G	COMPACT 3 with graphic display (serial number > 0100)

Number of device	**GD0153**			**GD0207**	**GD0141**		**GD0200**	**GD0208**
Assembly goup/ Printed circuit board	**C1V1**	**C1V2**	**C1V3**	**C1G**	**C2V1/ C2V2**	**C2V3**	**C3**	**C3G**
COBA Control Board Rev.	BB0549 28	BB0624 40	BB0768 14	BB0768 14	BB0624 40	BB0768 14	BB0768 14	BB0768 14
Interface Board Rev.	--	--	--		BB0609[1] 02	--	BB0609 02	BB0609 02
C2-Connector Board (MC rear wall) Rev.	--	BC0231 23	BC0231 23	BC0231 23	BC0231 23	BC0231 23	BC0231 23	BC0231 23
Measuring chamber Rev.	BP1783 01	BP1783 01	BP2102 00	BP2102 00	BP1783 01	BP2102 00	BP2102 00	BP2102 00
Power supply unit Rev.	EN0246 0G	EN0246 0G	EN0246 0G	EN0246 0G	EN0246 0G	EN0246 0G	EN0246 0G	EN0246 0G
Vacuum pump Rev.	YB1544 00	BP1786 00	BP1786 00	BP1786 00	BP1786 00	BP1786 00	BP1786 00	BP1786 00
KCl pump Rev.	YB1543	BP1785 00	BP1785 00	BP1785 00	BP1785 00	BP1785 00	BP1785 00	BP1785 00
Peristaltic pump Rev.	BP1876[2]	BP1846 00	BP1846 00	BP1846 00	BP1846 00	BP1846 00	BP1846 00	BP1846 00
Cover complete Rev.	BP1631 00	BP1775 00	BP2229 03	BP2271 01	BP1712 03	BP2230 03	BP2074 03	BP2272 01
Connector Board (cover) Rev.	BC0225 23	BC0225 23	BC0240 11	BC0240 11	BC0225 23	BC0240 11	BB0767 11	BB0767 11
Flat cable printer Rev.	--[3]	--[3]	BV1978 00	BV1978 00	--[3]	BV1978 00	BV1978 00	BV1978 00
Flat cable display Rev.	--[3]	--[3]	BV1977 00	BV1977 00	--[3]	BV1977 00	BV1977 00	BV1977 00

[1] Option
[2] BP1876 replaces BP1306
[3] Integreted in BC0225 (Connector Board)

Number of device	GD0153			GD0207	GD0141		GD0200	GD0208
Assembly goup/ Printed circuit board	**C1V1**	**C1V2**	**C1V3**	**C1G**	**C2V1/ C2V2**	**C2V3**	**C3**	**C3G**
Keyboard Rev.	YB1480[4] 00	YB1724 00	YB2058 00	YB2160 00	YB1657 00	YB2059 00	YB2013 00	YB2161 00
Printer	EN0243	EN0243	EN0243	EN0243	EN0243	EN0243	EN0243	EN0243
Display Rev.	YB1539	YB1758 00	YB1758 00	BB0780 13	YB1758 00	YB1758 00	YB1758 00	BB0780 13
Fillport module Rev.	BP1613 03	BP1885 01	BP2232 01	BP2232 01	BP1713 05	BP2075 03	BP2075 03	BP2075 03
SI-Board / sample inlet path Rev.	BP1591 01	BB0650 12	BB0779 00	BB0779 00	BB0650 12	BB0769 22	BB0769 22	BB0769 22
Hall switch Rev.	--	BB0635 02	BB0635 02	BB0635 02	BB0635 02	BB0635 02	BB0635 02	BB0635 02

Software

Number of device	GD0153			GD0207	GD0141		GD0200	GD0208
Version of device	**C1V1**	**C1V2**	**C1V3**	**C1G**	**C2V1/ C2V2**	**C2V3**	**C3**	**C3G**
Minimal software version	*2.10*	*3.10*	*3.50*	*1.00*	*2.10 (1.00)*	*3.00*	*1.00*	*1.00*
Actual version	*2.A0*	*3.50*	*3.70*	*1.00*	*2.50*	*3.10*	*1.10*	*1.00*

Service manual

Manual	Revision
AVL COMPACT 1,2,3	July 1999, Rev. 2.0
AVL COMPACT 1,2,3	August 1996, Rev. 1.0
AVL COMPACT 1, Version 1	January 1993, Rev. 1.0
AVL COMPACT 1, Version 2	September 1994, Rev. 2.0
AVL COMPACT 2, Version 1	July 1994, Rev. 1.0 September 1994, Rev. 1.1
AVL COMPACT 2, Version 2	January 1995, Rev. 2.0

[4] Keyboard with four buttons

3 GENERAL DESCRIPTION

Specifications **3-1**

Measurement parameters **3-1**

Input value **3-1**

Calculated values **3-2**

Data management **3-2**

Gas supply **3-2**

Sample data **3-3**

Measurement data **3-3**

Temperature / Humidity **3-3**

Electrical supply **3-3**

Classification **3-4**

Dimensions / Weight **3-4**

Test certificates **3-4**

Acoustic noise level (mean value) **3-4**

Tubing diagram **3-5**
Valves 3-7
Modular components 3-7

Software structure **3-8**
Main menu (AVL COMPACT 1) 3-8
Menu - QC (AVL COMPACT 1) 3-9
Menu - Printout (AVL COMPACT 1) 3-10
Menu - Maintenance (AVL COMPACT 1) 3-11
Menu - System test (AVL COMPACT 1) 3-12
Menu - Settings (AVL COMPACT 1) 3-14
Menu - Measurement / QC measurement / External sample (AVL COMPACT 1) 3-16
Menu - Sample input / Positioning (AVL COMPACT 1) 3-17
Menu - Ready (AVL COMPACT 1) 3-18
Menu - Calibrations (AVL COMPACT 1) 3-19
Main menu (AVL COMPACT 2 and 3) - no password activated - Access code 1 3-21
Main menu - Access code 2 3-23
Main menu - Access code 3 3-23
Menu - QC (AVL COMPACT 2 and 3) 3-24
Menu - Printout (AVL COMPACT 2 and 3) 3-25
Menu - Maintenance (AVL COMPACT 2 and 3) 3-26
Menu - System test (AVL COMPACT 2 and 3) 3-27
Menu - Settings (AVL COMPACT 2 and 3) 3-29

Menu - Measurement / QC measurement / External sample (AVL COMPACT 2 and 3).....3-31
Menu - Sample input / Positioning (AVL COMPACT 2 and 3) 3-32
Menu - Ready (AVL COMPACT 2 and 3) 3-34
Menu - Calibrations (AVL COMPACT 2 and 3).....3-35

3 General description

Specifications

Measurement parameters	Displayed range	Resolution
PO_2	-10 ..... 742 mmHg	0,1 mmHg
PCO_2	4 ..... 200 mmHg	0,1 mmHg
pH	6,000 - 8,000	0,001
Barometer	300 ..... 800 mmHg	0,1 mmHg
	375 ..... 1058 mbar	0,1 mbar
Normal sample (> 55 µl), Mini sample (60 µl limitation of volume by contact path)[1] and Micro sample (25 - 55 µl):	**Specifications for whole blood**	**Stand. deviation**
PO_2	0,0 ..... 143 mmHg	≤ 1,2 mmHg
	143..... 742 mmHg	1,2 ..... 19,0 mmHg
PCO_2	4,0 ..... 40 mmHg	0,2 ..... 0,8 mmHg
	40 ..... 200 mmHg	0,8 ..... 4,0 mmHg
pH	6,000..... 8,000	≤ 0,005

Input value		Range (conv.) *	Default
Patient temperature		14 ..... 44 °C	37 °C
		57,2.....111,2 °F	98,6 °F
Total hemoglobin	tHb	1 ..... 26 g/dl	15 g/dl
		0,7.....16,1 mmol/l	9,3 mmol/l
		10.....260 g/l	150 g/l
Hemoglobin type		adult / fetal	adult
	*P*50 adult	15 ..... 40 mmHg	26,7 mmHg
	*P*50 fetal	10 ..... 40 mmHg	21,5 mmHg
Fraction of inspired oxygen	FIO_2	0,11..... 0,99	0,21
Respiratory quotient	RQ	0,71..... 1,99	0,84
Patient number		10 digits max.	
Patient age		0 ..... 99 years	
Patient sext		male / female	

* SI units are also available.

[1] Mini- and micro sample AVL Compact 2 and 3 only

Calculated values

	AVL COMPACT 1	AVL COMPACT 2 and 3	Range
Base excess in vitro	BE	BE	-40 ..... +40 mmol/l
Base excess in vitro with SO_2 correction		BE_{act} (AVL COMPACT 3 only)	-40 ..... +40 mmol/l
Base excess in vivo	BE_{ecf}	BE_{ecf}	-40 ..... +40 mmol/l
Buffer base	BB	BB	0 ..... 100 mmol/l
Actual bicarbonate	HCO_3^-	HCO_3^-	1 ..... 100 mmol/l
Total CO_2	TCO_2	$ctCO_2$	1 ..... 100 mmol/l
Standard bicarbonate	$stHCO_3^-$	$cHCO_3^-$	1 ..... 100 mmol/l
Standard pH	stpH	pH_{st}	6.5 ..... 8.0
Oxygen saturation	O_2sat	SO_2	0 ..... 100 %
Oxygen content	O_2cont	ctO_2	0 ..... 56 vol%
Hydrogen ion concentration	cH^+	cH^+	10 ..... 1000 nmol/l
Alveolar-arterial oxygen partial pressure difference	$AaDO_2$	$AaDO_2$	0 ..... 742 mmHg
Standardized ionized Calcium (at Datalink with AVL 988-3)	-	$niCa_{pH=7,4}$	0,1 ..... 6,0 mmol/l
*P*O2 at patient temperature	-	PO_2^t	0 ..... 742 mmHg
*P*CO2 at patient temperature		PCO_2^t	0 ..... 200 mmHg
pH at patient temperature	-	pH^t	6 8
relative Shunt volume	-	Shunt	0 ..... 100 %

Data management

Printout	built-in thermal printer
Interface	1x RS 232, 9-pin SUBMIN D/F (AVL COMPACT 1, 2 and 3) 1x RS 232, 9-pin SUBMIN D/F (AVL COMPACT 3 and optional for AVL COMPACT 2 to SN 1500) 1x RS 232, 25-pin SUBMIN D/F (AVL COMPACT 3 and optional for AVL COMPACT 2 to SN 1500)

Gas supply

Calibration gas 1	20 % O_2, 5.5 % CO_2, balanced N_2	(+/- 0.03 % absolute)
Calibration gas 2 (AVL COMPACT 2 and 3 only)	10 % CO_2, balanced N_2	(+/- 0.03 % absolute)
Admissible pressure	3 - 4 bar (43,5 - 58 psi or 300 - 400 kPa)	

Sample data

Sample media	blood, (serum, plasma - for pH only) AVL approved quality control materials
Sample input via	syringe, capillary, microsampler
Sample volume	>55 µl (capillary mode) 60 µl (mini sample in capillary mode - limitation of volume by contact path; AVL COMPACT 2 and 3 only) 25-55 µl (micro sample in capillary mode; AVL COMPACT 2 and 3 only) ≥110 µl (in syringe mode; AVL COMPACT 1 only)

Measurement data

Units	SI, conventional
AVL COMPACT 1:	
Sample rate	up to 32 samples per hour (with interruption of conditioning)
(syringe, capillary mode)	up to 18 samples per hour (without interruption of conditioning)
AVL COMPACT 2 and 3:	up to 32 samples per hour (with interruption of conditioning)
Sample rate	up to 28 samples per hour (without interruption of conditioning)
(syringe, capillary mode)	

Temperature / Humidity

Ambient temperature	15 °C - 32 °C (59 °F - 89.6 °F)
Measuring chamber temperature	37 °C ± 0,1 °C (98.6 °F ± 0.18 °F)
Relative humidity	20 - 90 %

Electrical supply

Voltage range	100 - 240 V AC, self adapting
Frequency	50 - 60 Hz
Power consumption (max.)	typical 65 VA (depending on actual operating mode) max. 110 VA (depending on actual operating mode

Classification

Safety category	I
Instrument type	B (following ÖVE - MG/EN 60 601-1, IEC 61010-1)
Operation type	For continuous operation
Protective system	IP20
Ex - protection	The device is not specified for operation inside explosion hazardous areas.

Dimensions / Weight

Width	34.0 cm (13.4 inch)
Depth	31.5 cm (12.4 inch)
Height	34.0 cm (13.4 inch)
Weight	13.0 kg (28.7 pounds)

Test certificates

ÖVE:
tested according to the standard EN60601-1/1991

TÜV:
tested according to the standard EN61010-1/1993, 1995

NOTE: *According to TÜV standard only TÜV tested pressure regulator and gas cylinder are allowed to be used !*

CSA:
tested according to the standard C22.2 Nr. 151-M1986

CE conformity:
The analyzer corresponds to the directives 89/336/EEC (EMC-directives), tested according to the generic standard EN50081-1 and EN00081-2, as well as 73/23/EEC (Low Voltage Directive with addition 93/68/EWG), tested according to EN61010-1, and is allowed to be labeled with the CE marking.

Acoustic noise level *(mean value)*

standby	28 dbA
ready	28 dbA
wash/dry	60 dbA
measurement	43 dbA

Tubing diagram

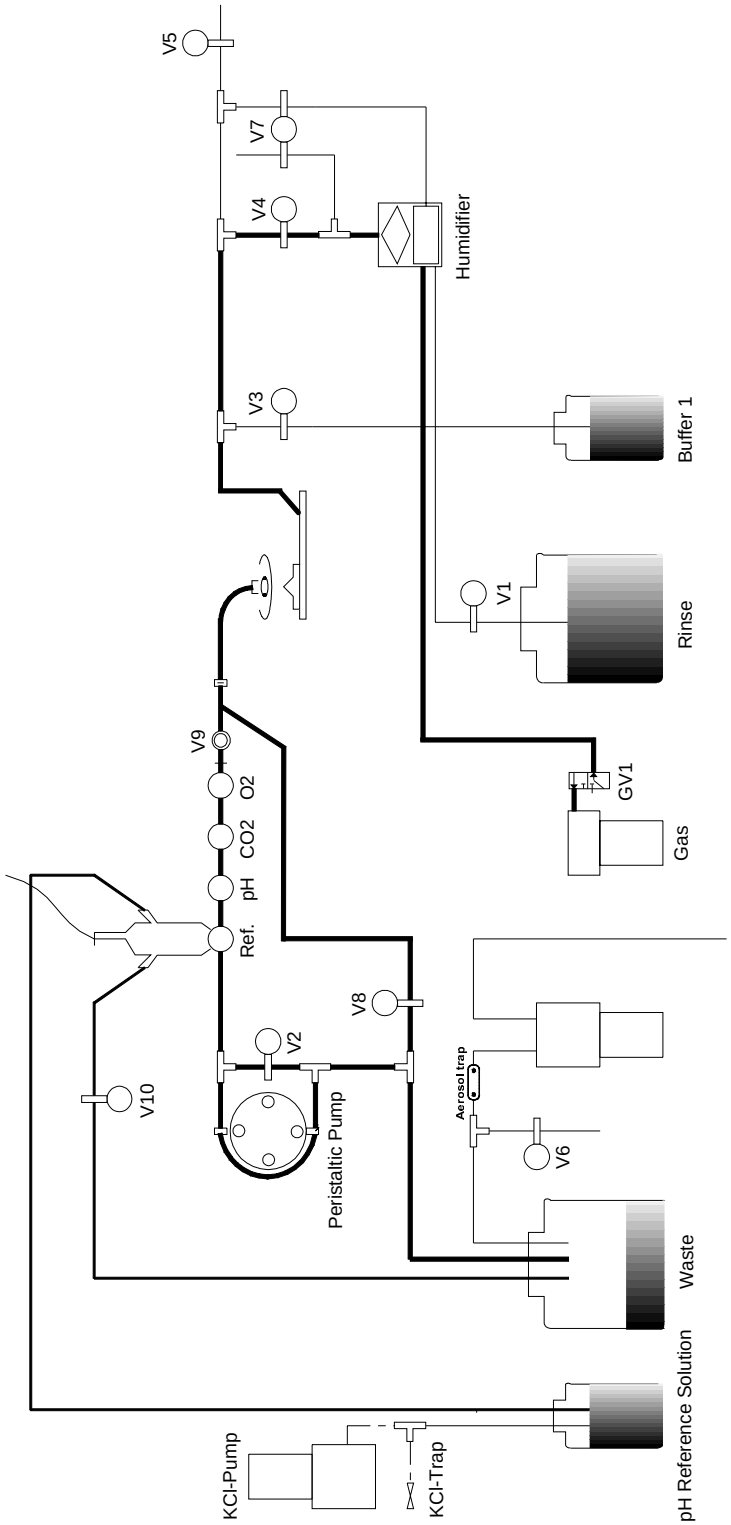

Fig. 3-1: Tubing diagram (AVL COMPACT 1)

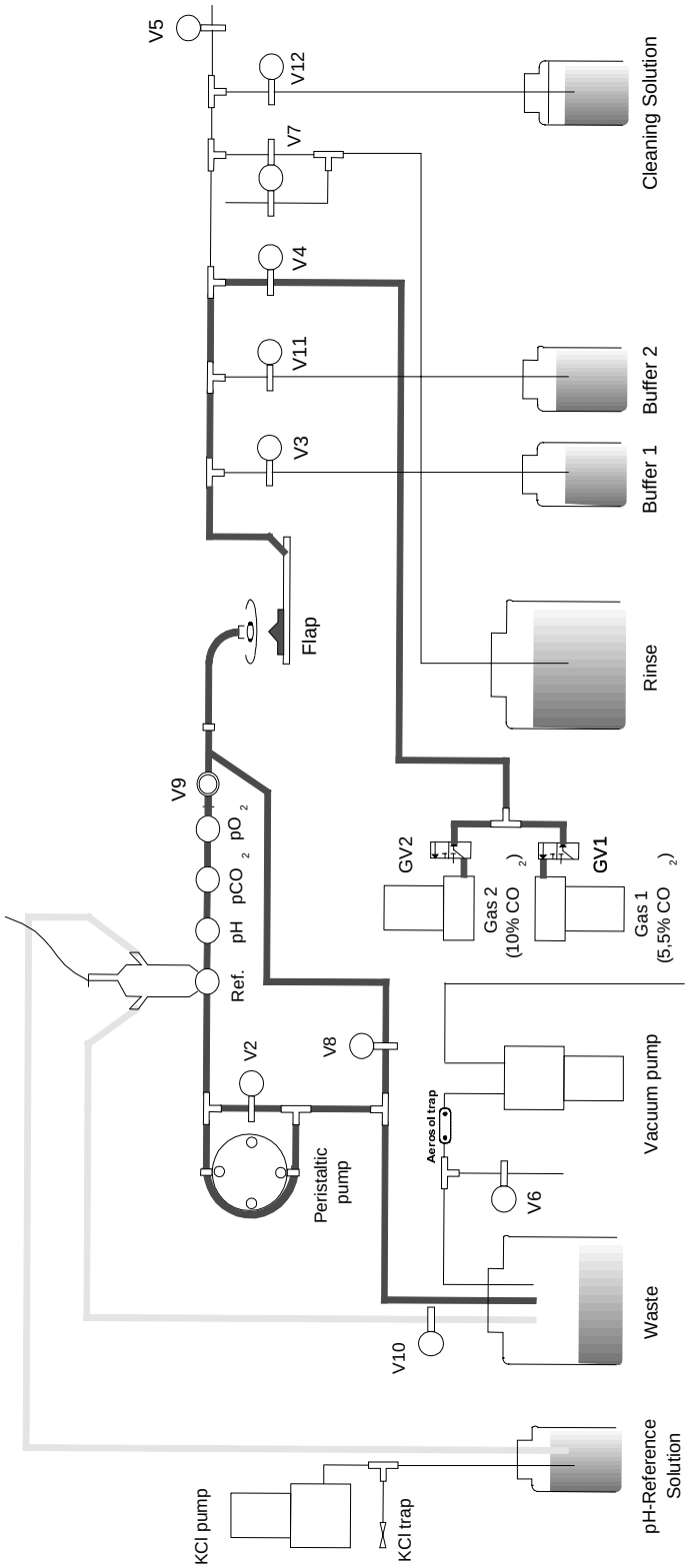

Fig. 3-2: Tubing diagram (AVL COMPACT 2 and 3)

Valves

V1	Rinse (AVL COMPACT 1 only)
V2	Peristaltic pump bypass
V3	Buffer 1
V4	Gas
V5	Air
V6	Vacuum
V7	Wash
V8	Measuring chamber bypass
V9	Measuring chamber valve
V10	pH-Reference valve
GV1	Gas valve 1
GV2	Gas valve 2 (AVL COMPACT 2 and 3 only)
V11	Buffer 2 (AVL COMPACT 2 and 3 only)
V12	Cleaning (AVL COMPACT 2 and 3 only)

Modular components

- Measuring chamber unit with electrodes thermostated at 37 °C ± 0.1 °C (98.6 °F ± 0.18 °F)
- Sample filling unit for sample input, also including the valve unit for control of reagent transport and the sample inlet path
- Peristaltic pump for transport of sample and reagents
- Vacuum pump
- Tubing system
- Reagent/Waste bottles (bottle compartment)
- COBA Control Board, including the preamplifier, analog signal multiplexer, A/D converter and CPU
- Liquid crystal display, 4 lines x 20 characters a line

Option: Liquid crystal display for cyrillic characters (AVL COMPACT 2 and 3 only)

- Keyboard with **ESC, UP, DOWN, NO, YES** - keys. (At AVL COMPACT 3 extented, numeric keyboard)
- Thermal printer
- Serial RS 232 C interface
- KCl pump

Software structure

Main menu (AVL COMPACT 1)

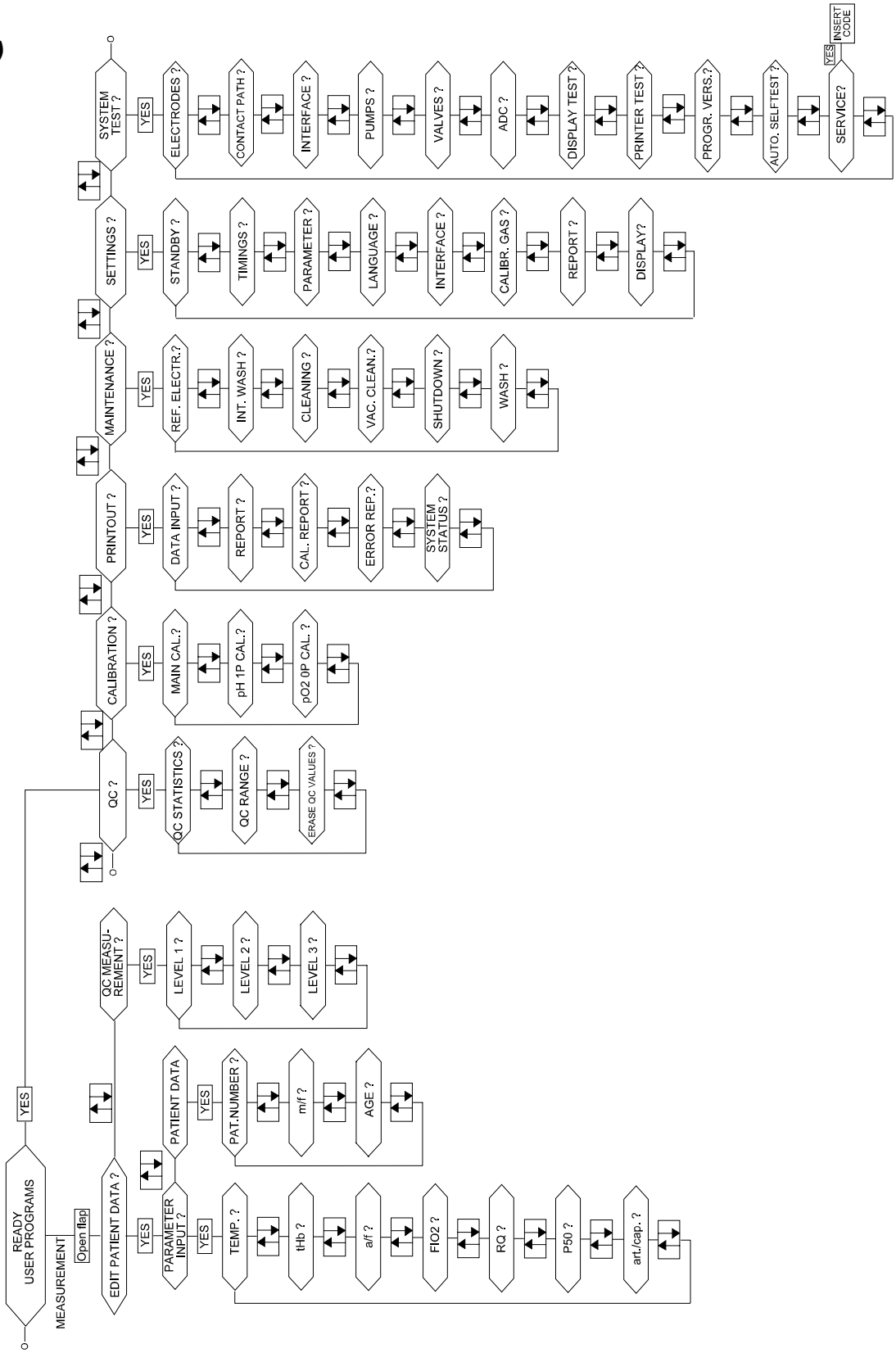

Fig. 3-3: Main menu (AVL COMPACT 1)

Menu - QC
(AVL COMPACT 1)

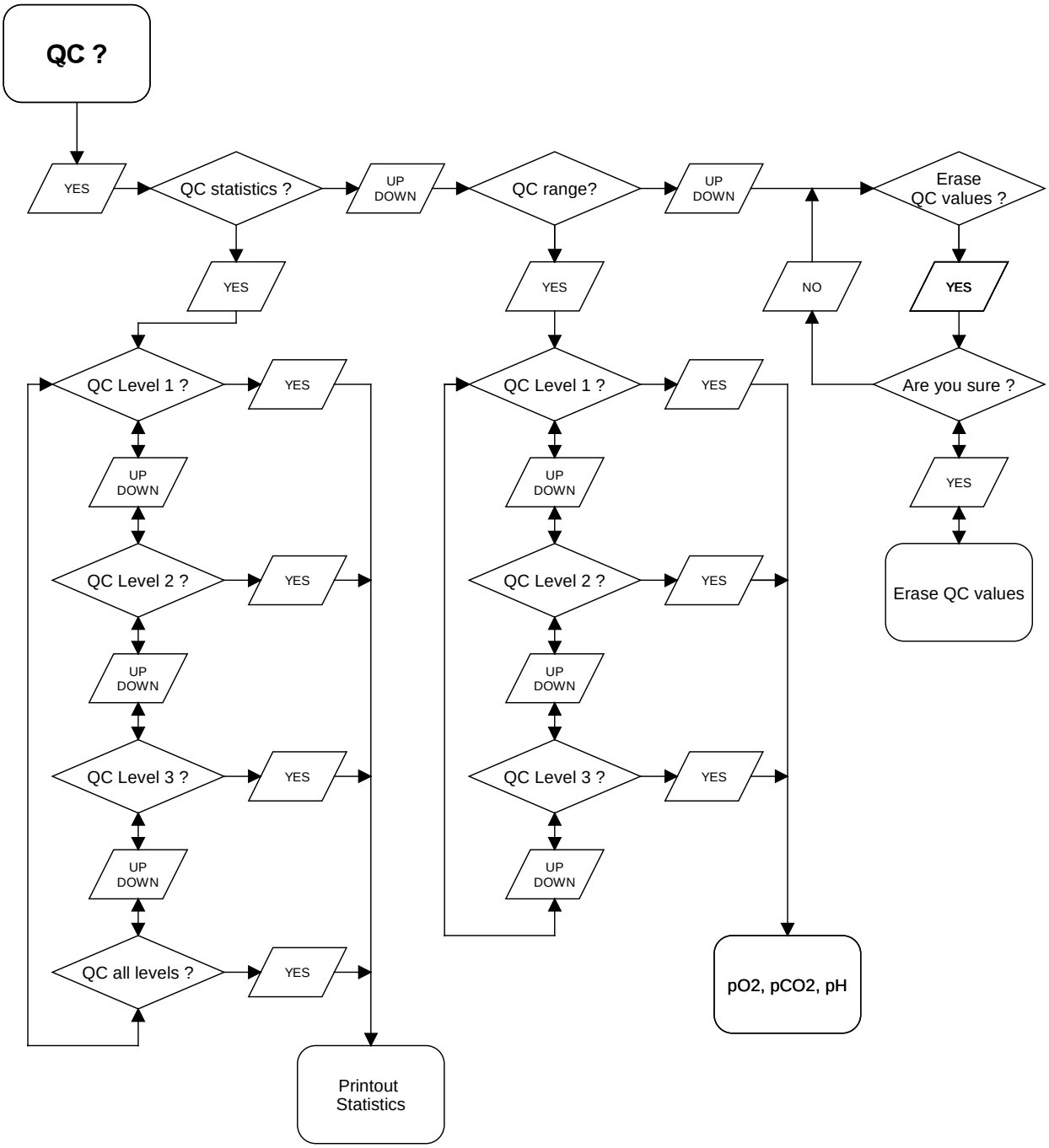

Fig. 3-4: Menu - QC (AVL COMPACT 1)

Menu - Printout
(AVL COMPACT 1)

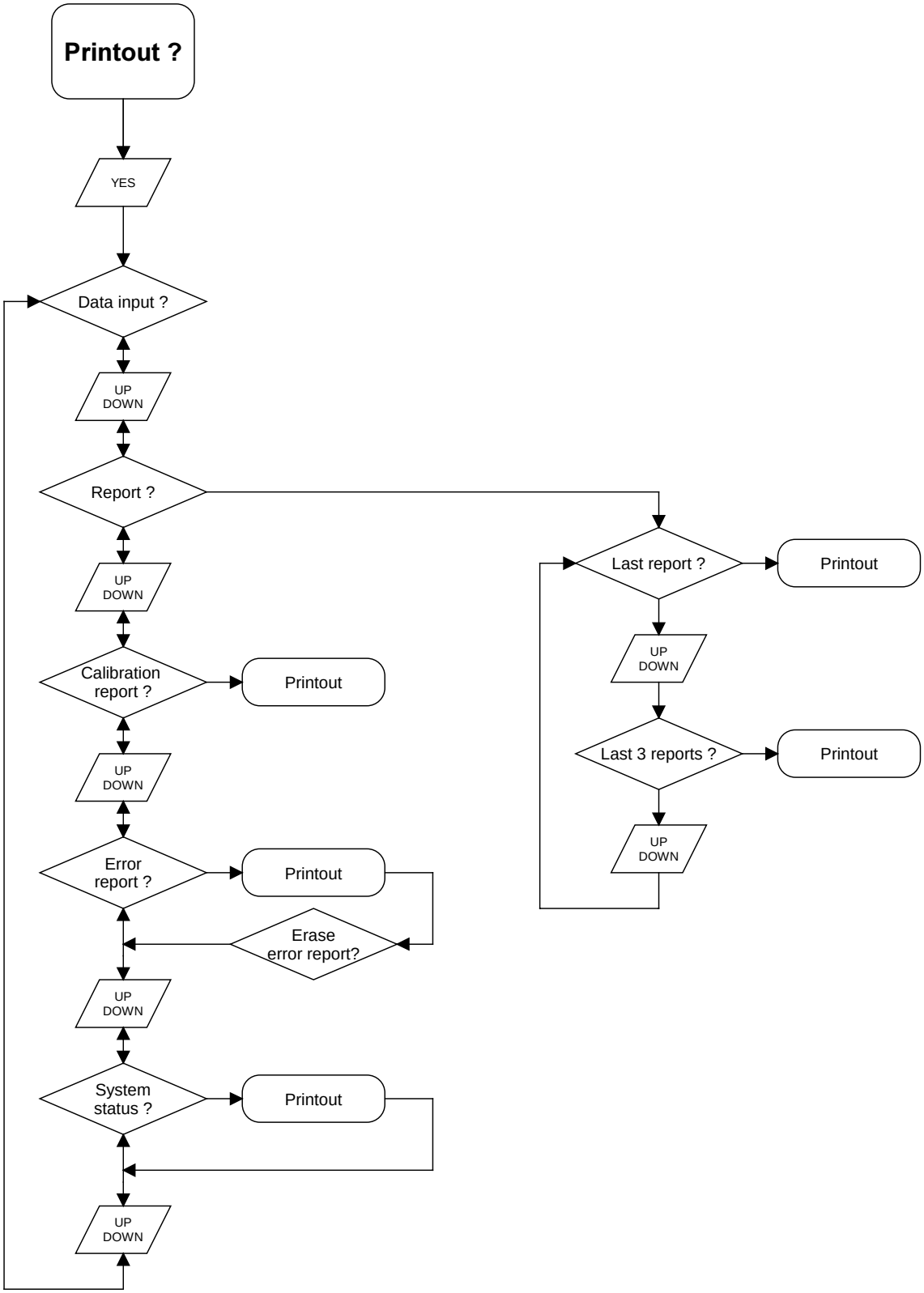

Fig. 3-5: Menu - Printout (AVL COMPACT 1)

Menu - Maintenance
(AVL COMPACT 1)

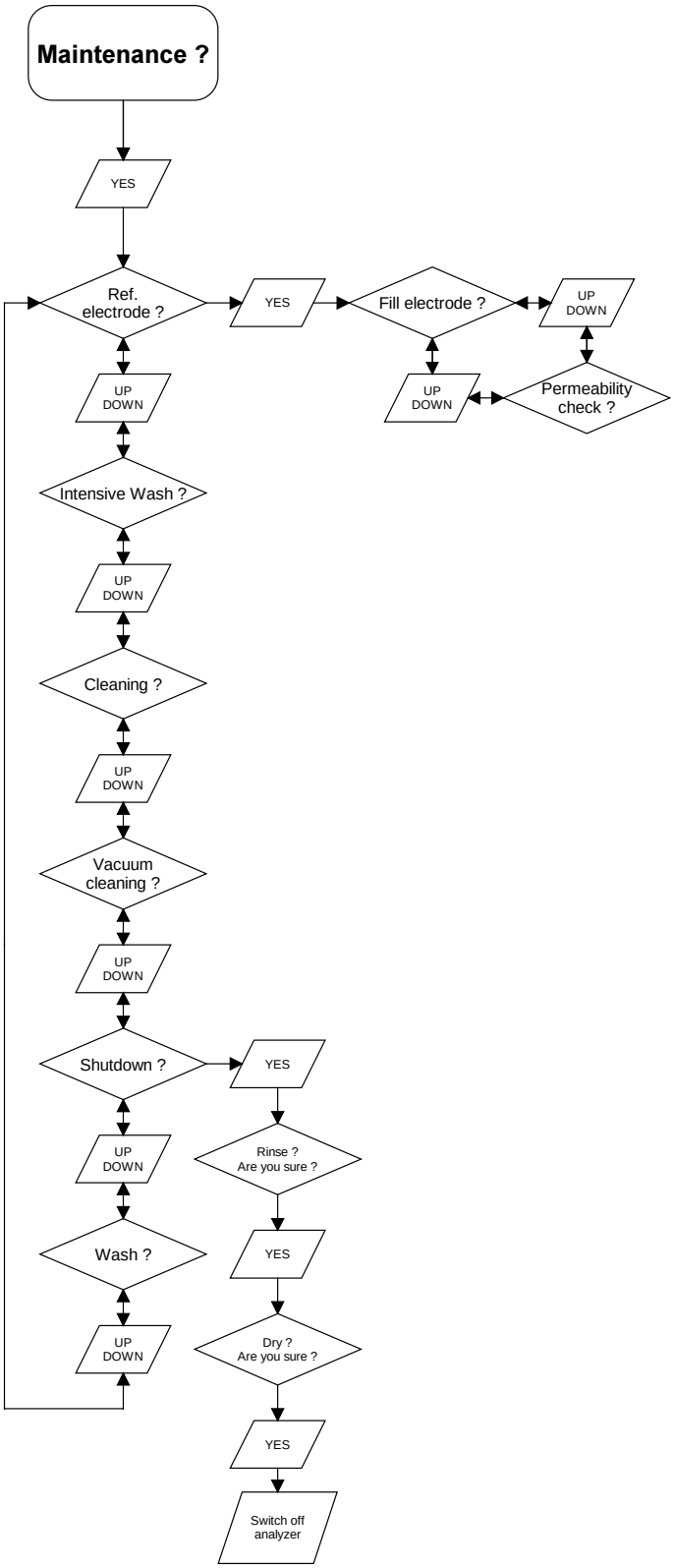

Fig. 3-6: Menu - Maintenance (AVL COMPACT 1)

Menu - System test
(AVL COMPACT 1)

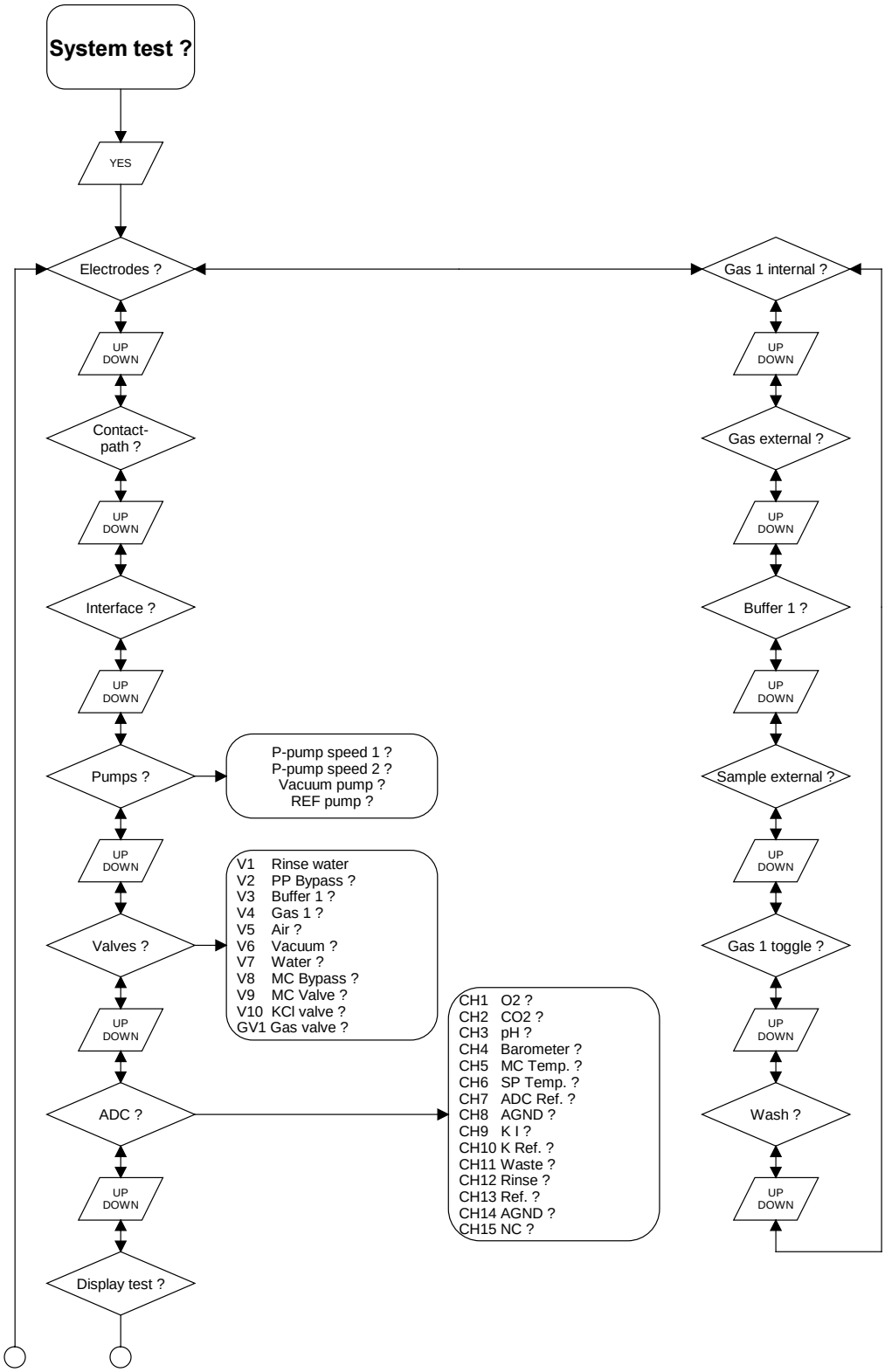

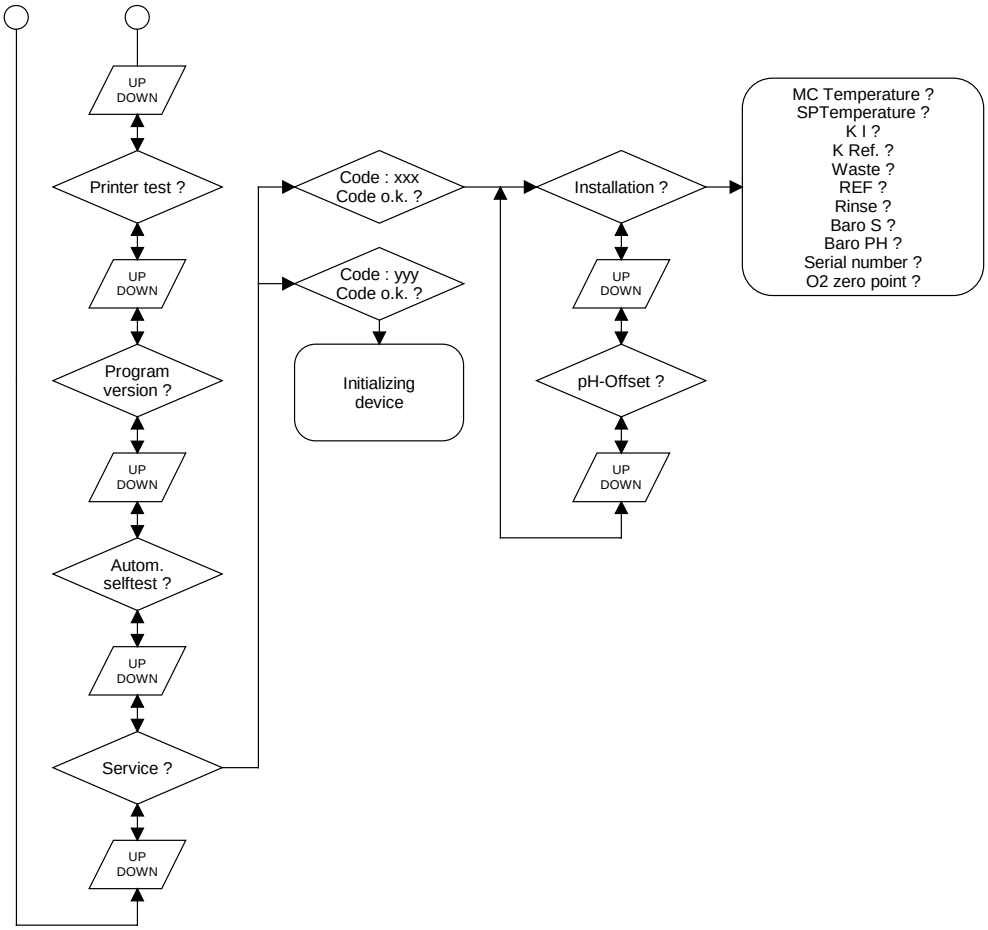

Fig. 3-7: Menu - System test (AVL COMPACT 1)

Menu - Settings
(AVL COMPACT 1)

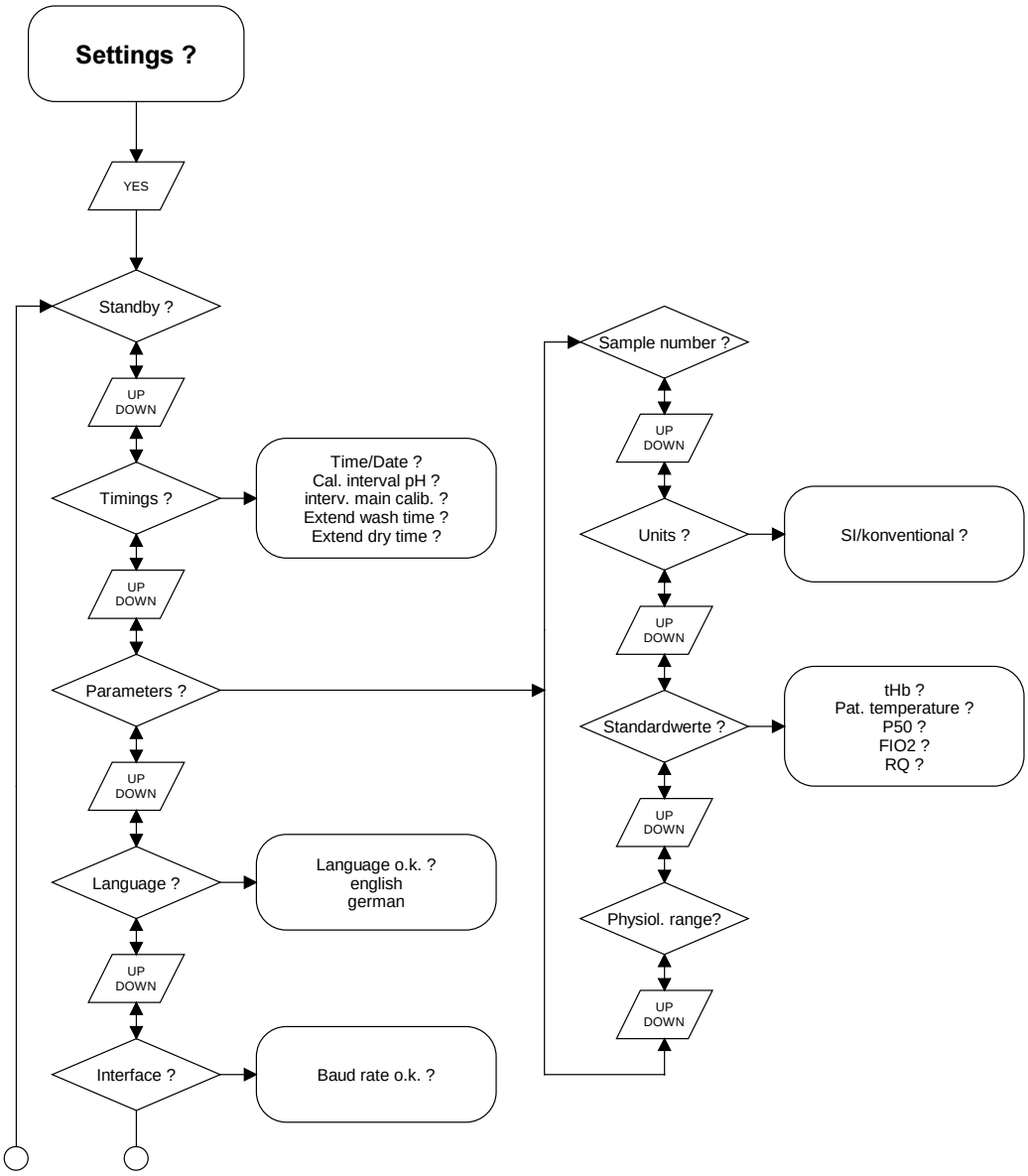

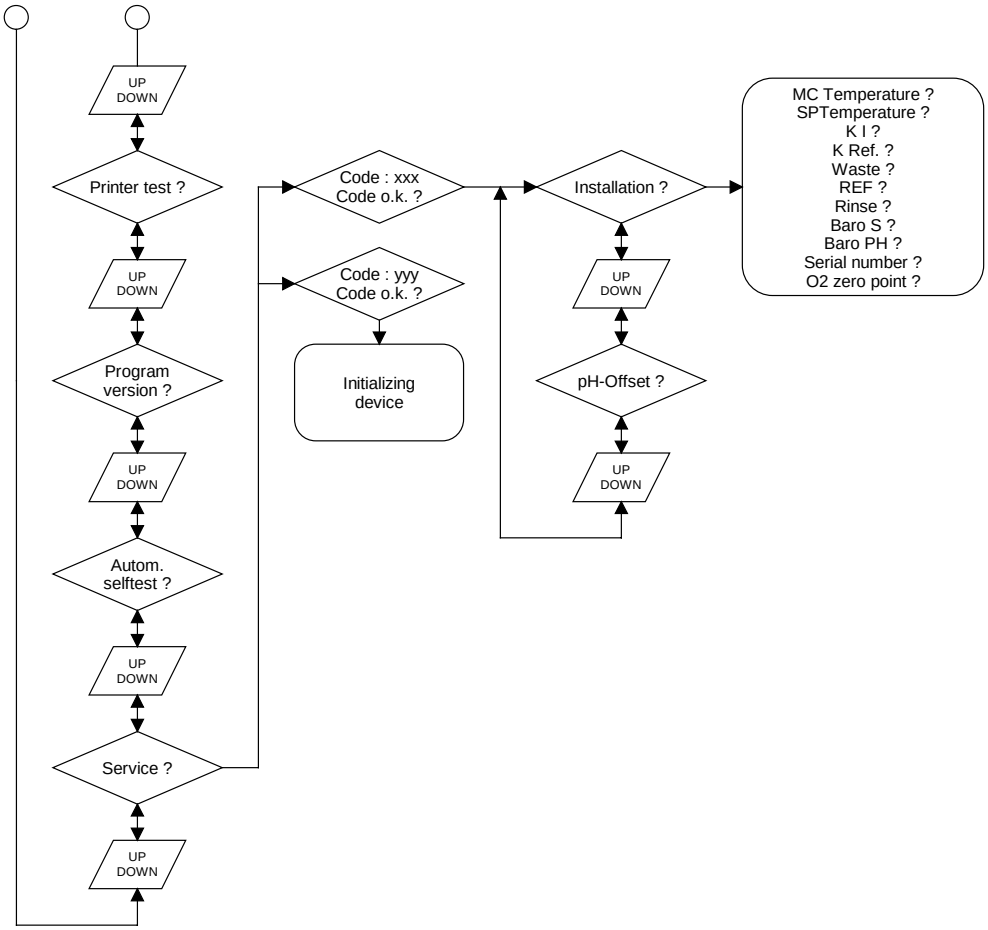

Fig. 3-8: Menu - Settings (AVL COMPACT 1)

Menu - Measurement / QC measurement / External sample (AVL COMPACT 1)

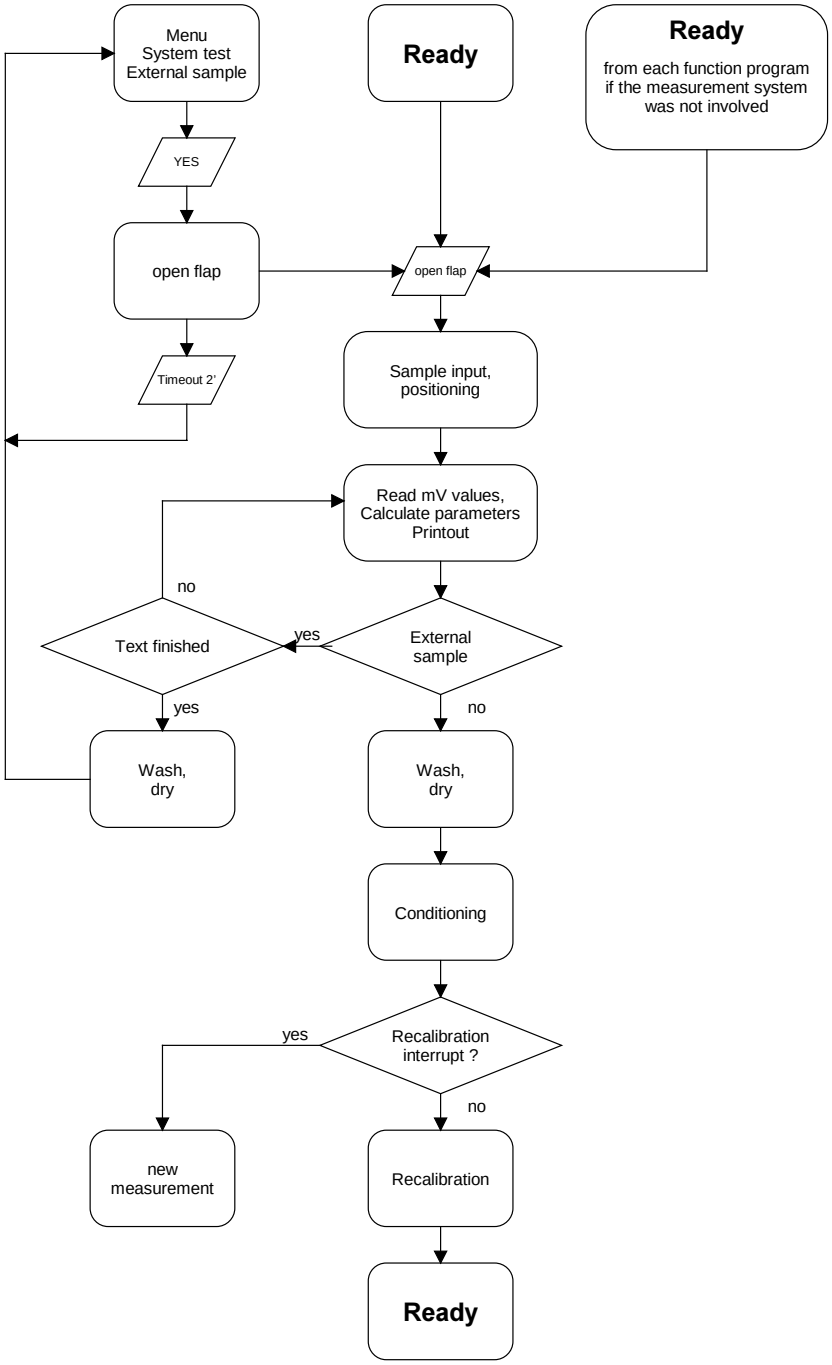

Fig. 3-9: Menu - Measurement/QC measurement /External sample (AVL COMPACT 1)

Menu - Sample input / Positioning (AVL COMPACT 1)

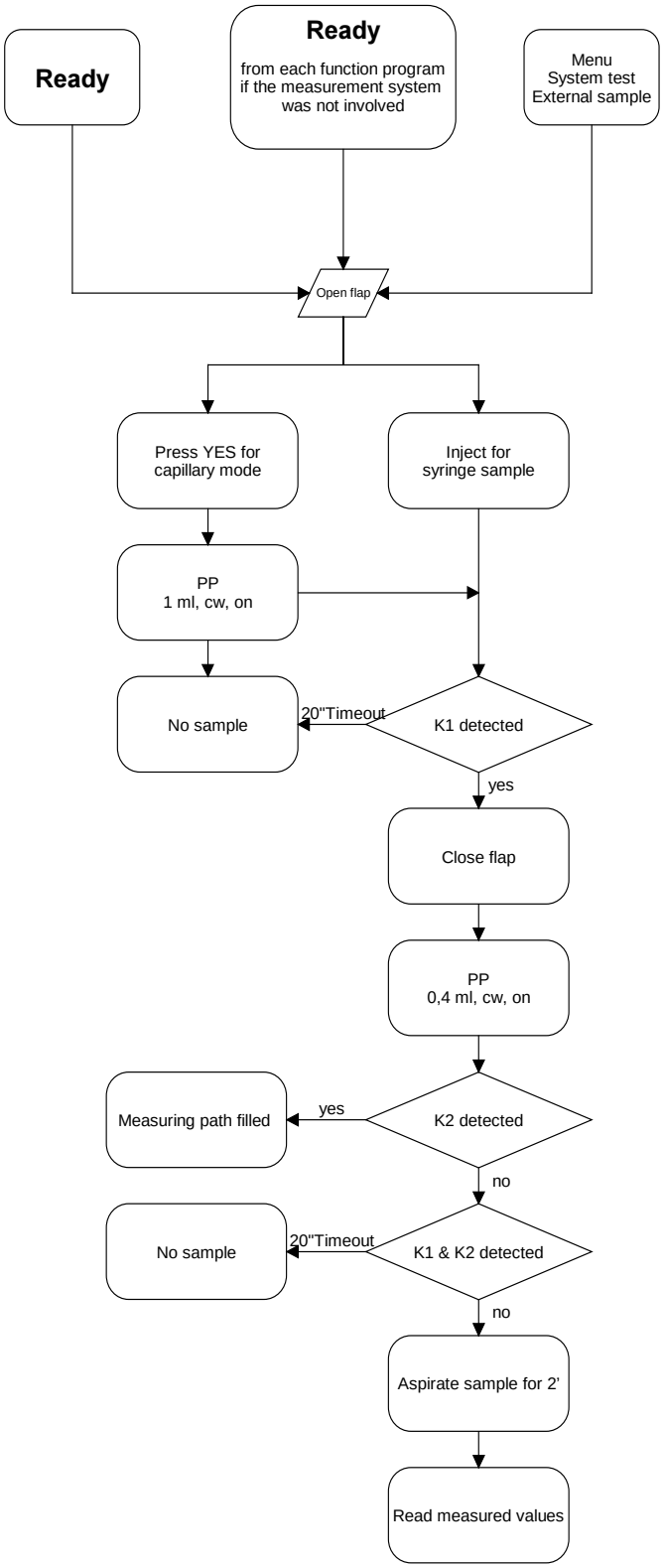

Fig. 3-10: Menu - Sample input, Positioning (AVL COMPACT 1)

Menu - Ready
(AVL COMPACT 1)

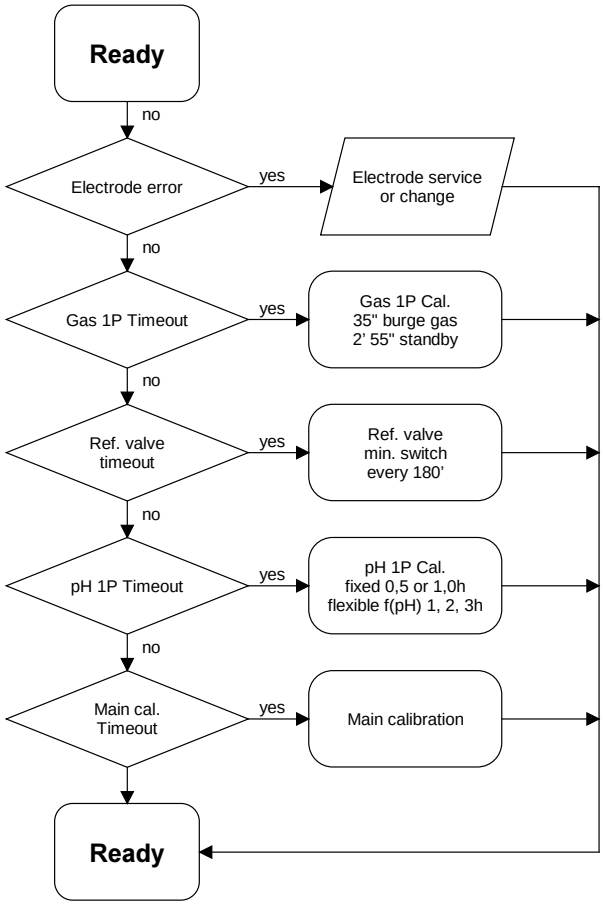

Fig. 3-11: Menu - Ready (AVL COMPACT 1)

Menu - Calibrations
(AVL COMPACT 1)

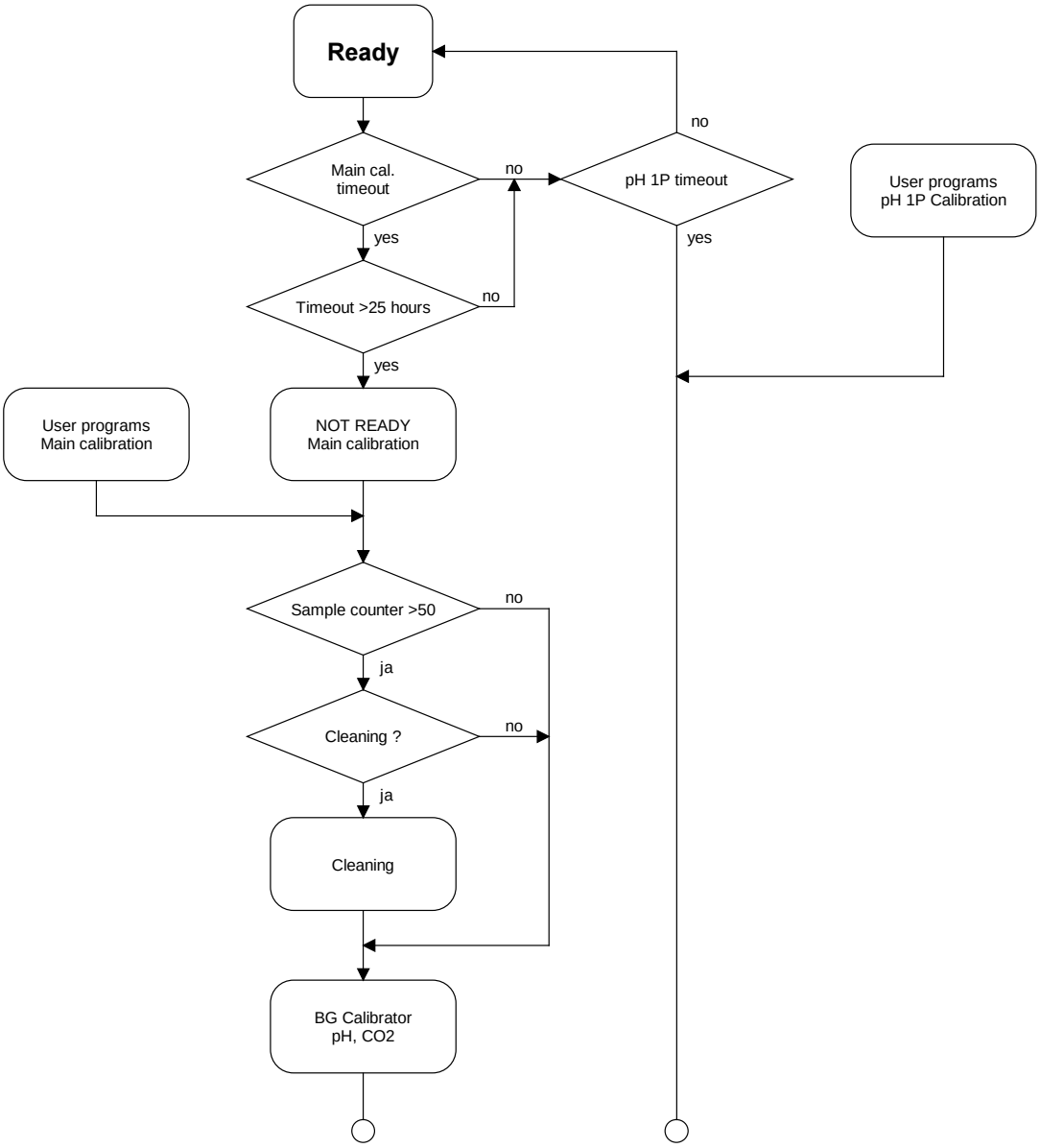

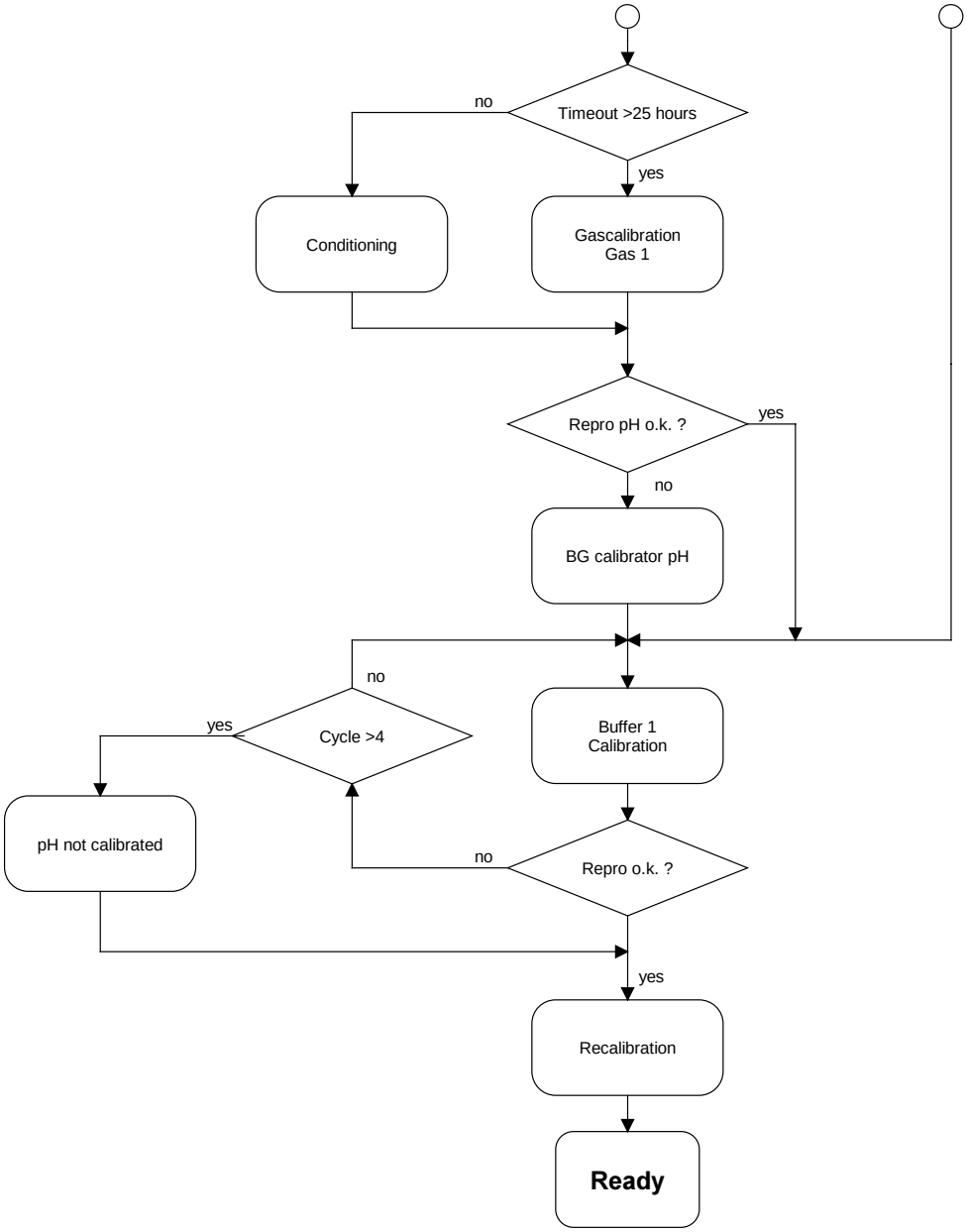

Fig. 3-12: Menu - Calibrations (AVL COMPACT 1)

Main menu
(AVL COMPACT 2 and 3)
- no password activated
- Access code 1

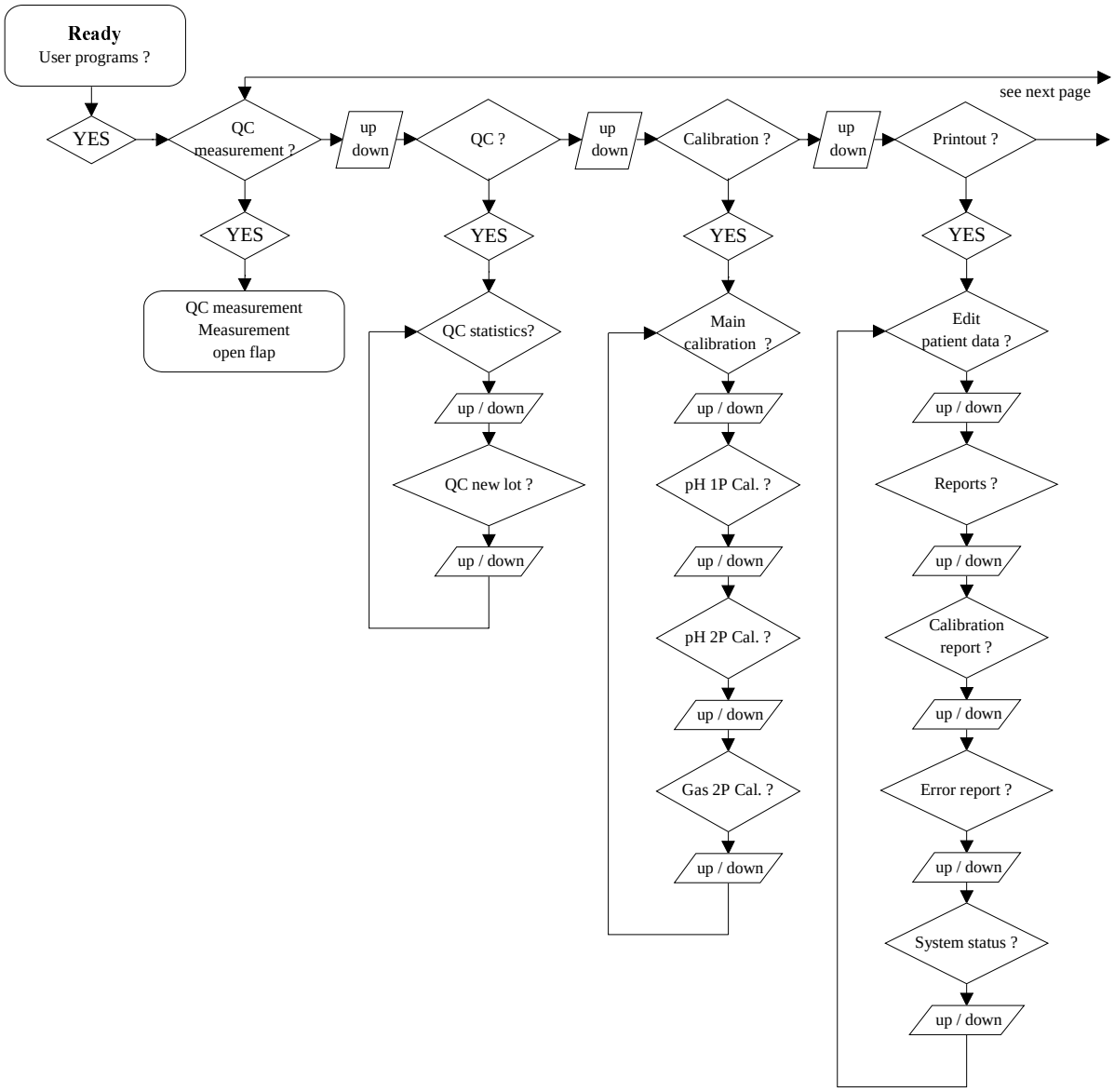

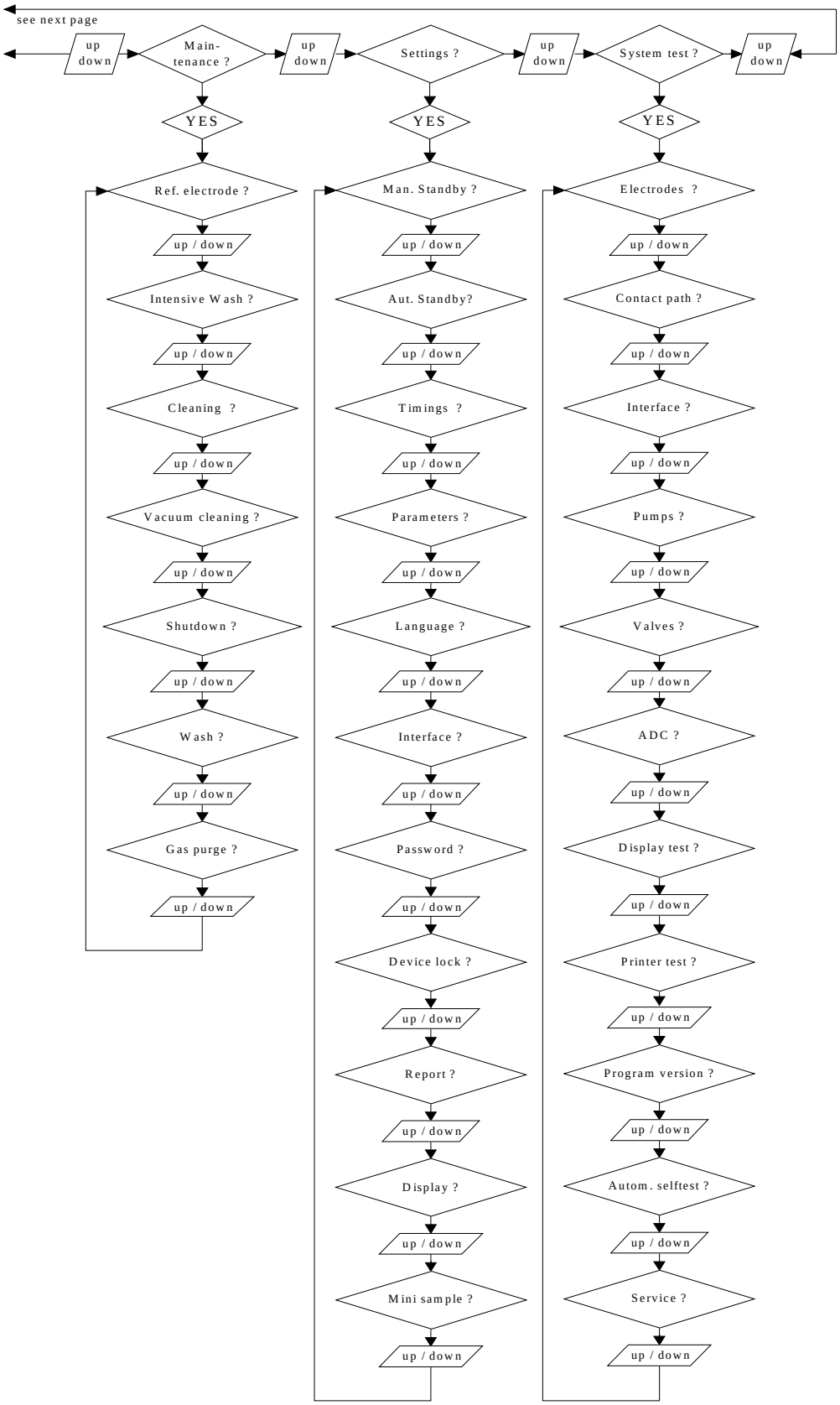

Fig. 3-13: Main menu - no password activated - Access code 1 (AVL COMPACT 2 and 3)

Main menu
- Access code 2

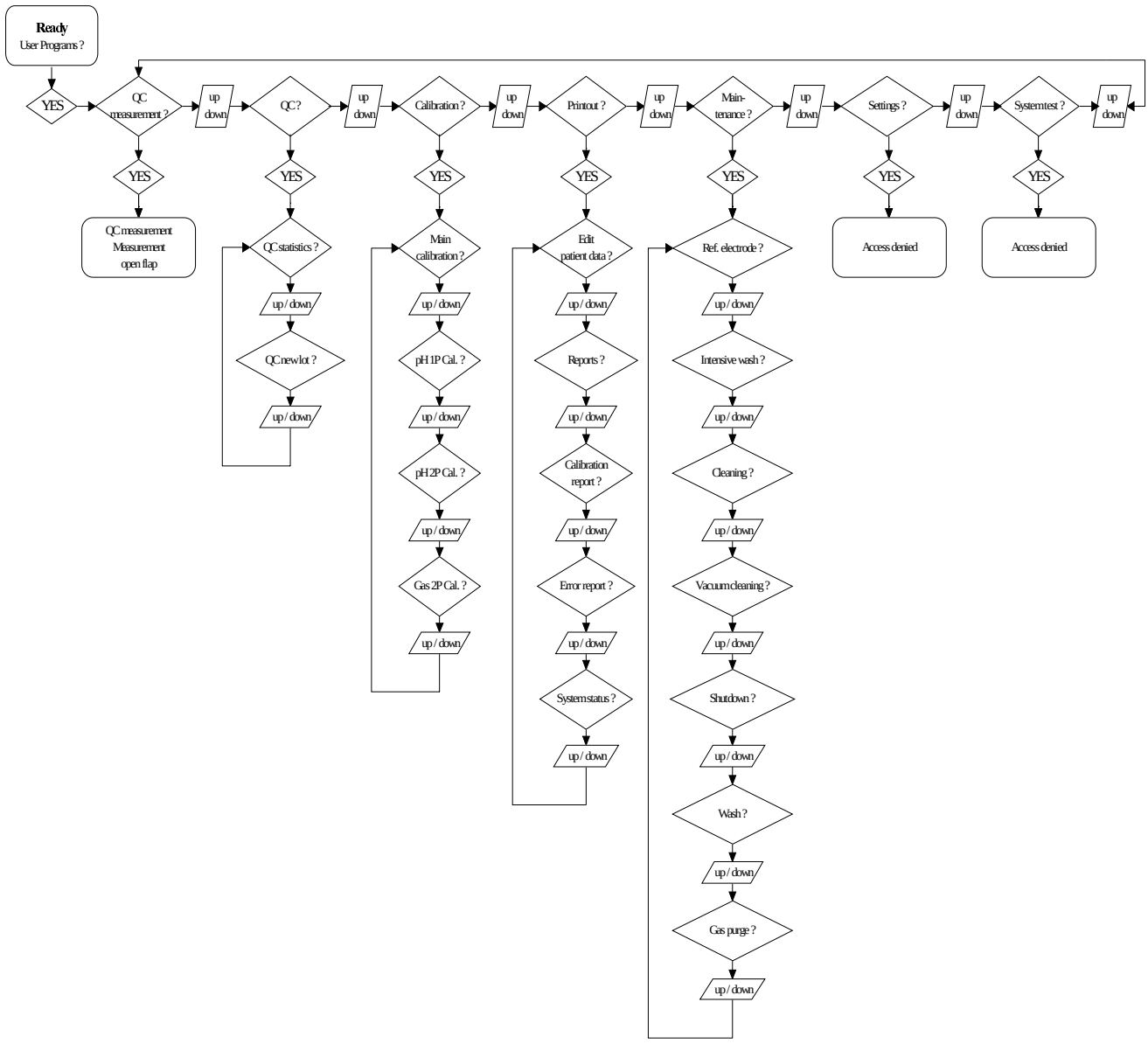

Fig. 3-14: Main menu - Access code 2
(AVL COMPACT 2 and 3)

Main menu
- Access code 3

With this code only measurements are possible.
(AVL COMPACT 2 and 3)

Menu - QC
(AVL COMPACT 2 and 3)

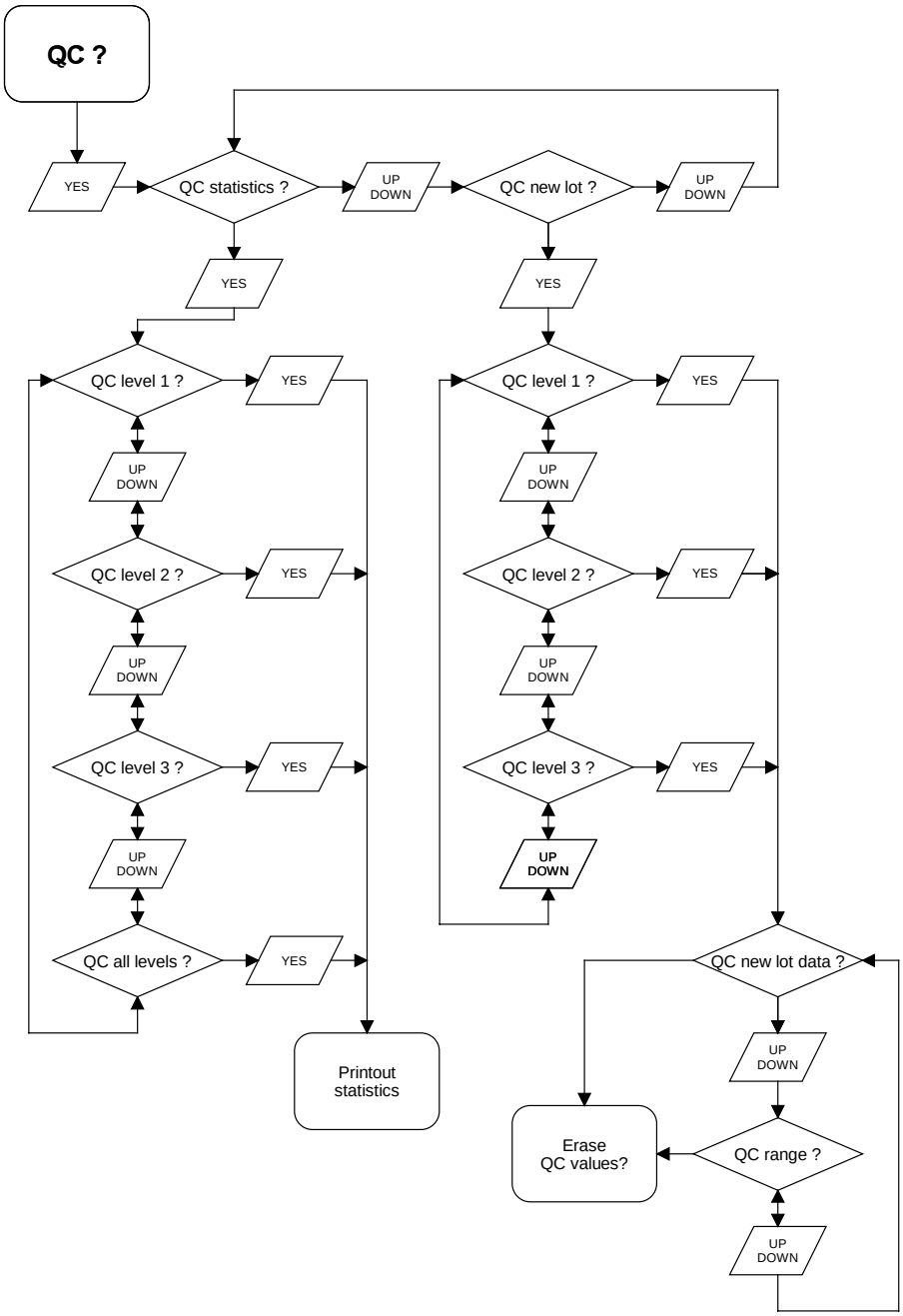

Fig. 3-15: Menu - QC (AVL COMPACT 2 and 3)

Menu - Printout
(AVL COMPACT 2 and 3)

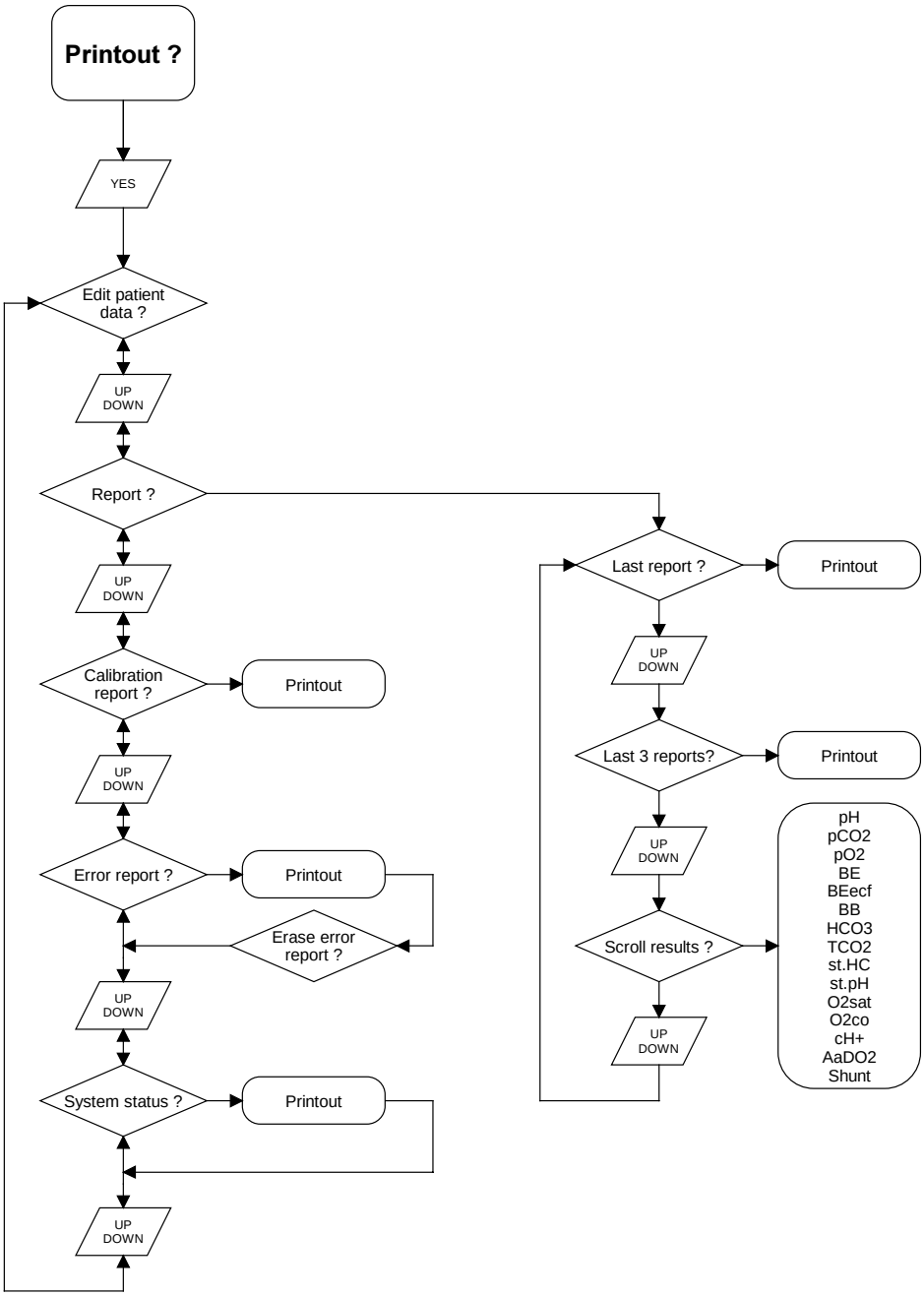

Fig. 3-16: Menu - Printout (AVL COMPACT 2 and 3)

Menu - Maintenance
(AVL COMPACT 2 and 3)

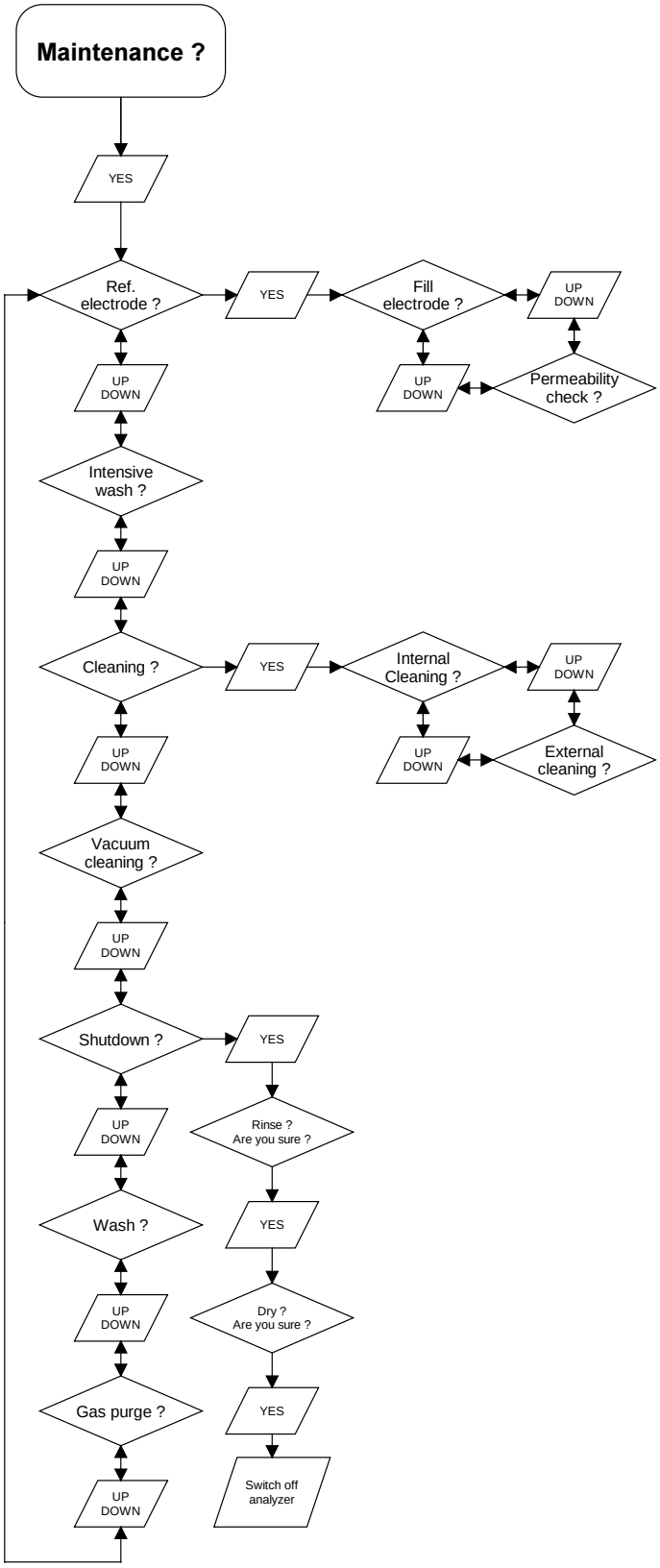

Fig. 3-17: Menu - Maintenance (AVL COMPACT 2 and 3)

Menu - System test
(AVL COMPACT 2 and 3)

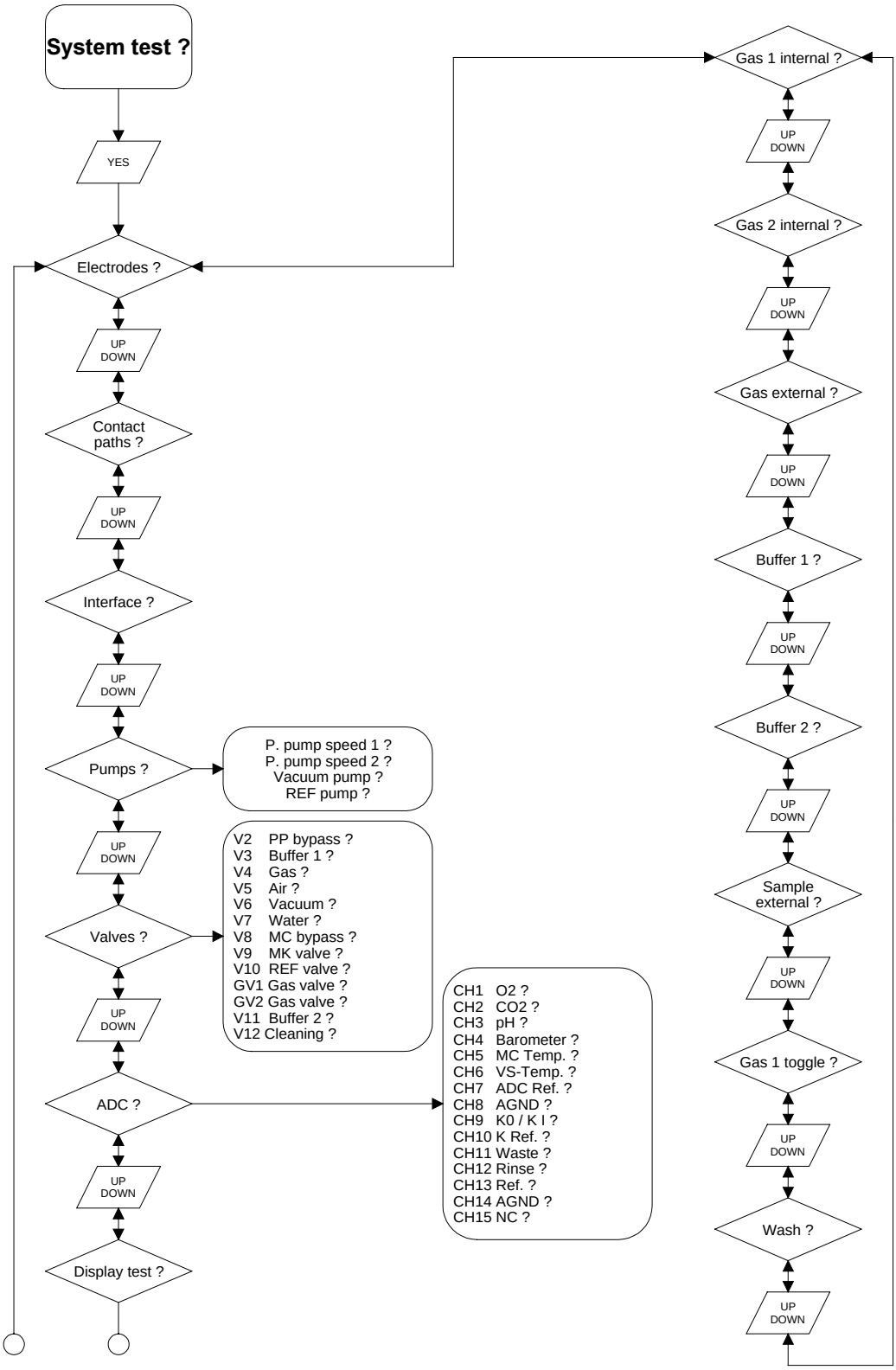

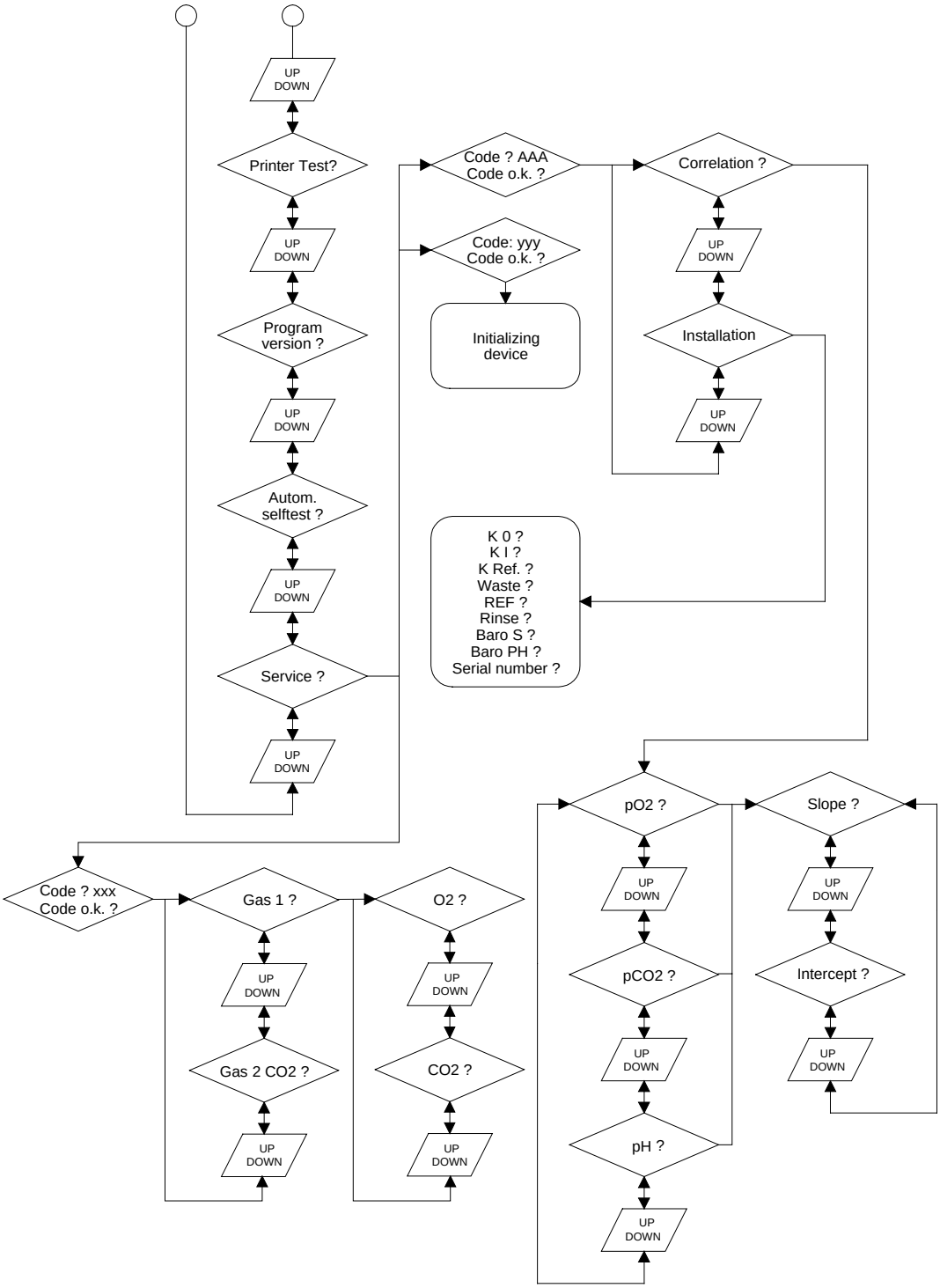

Fig. 3-18: Menu - System test (AVL COMPACT 2 and 3)

Menu - Settings
(AVL COMPACT 2 and 3)

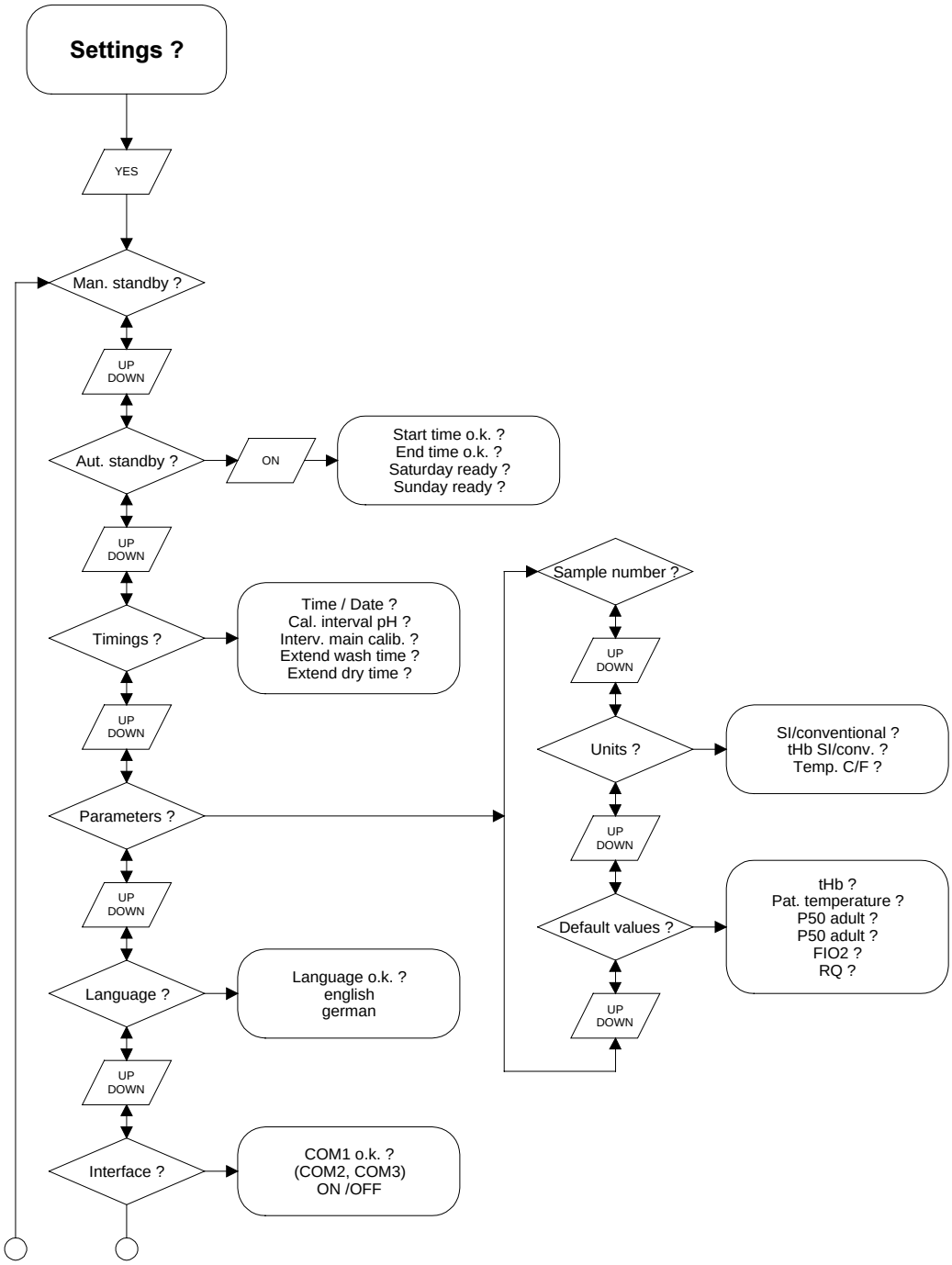

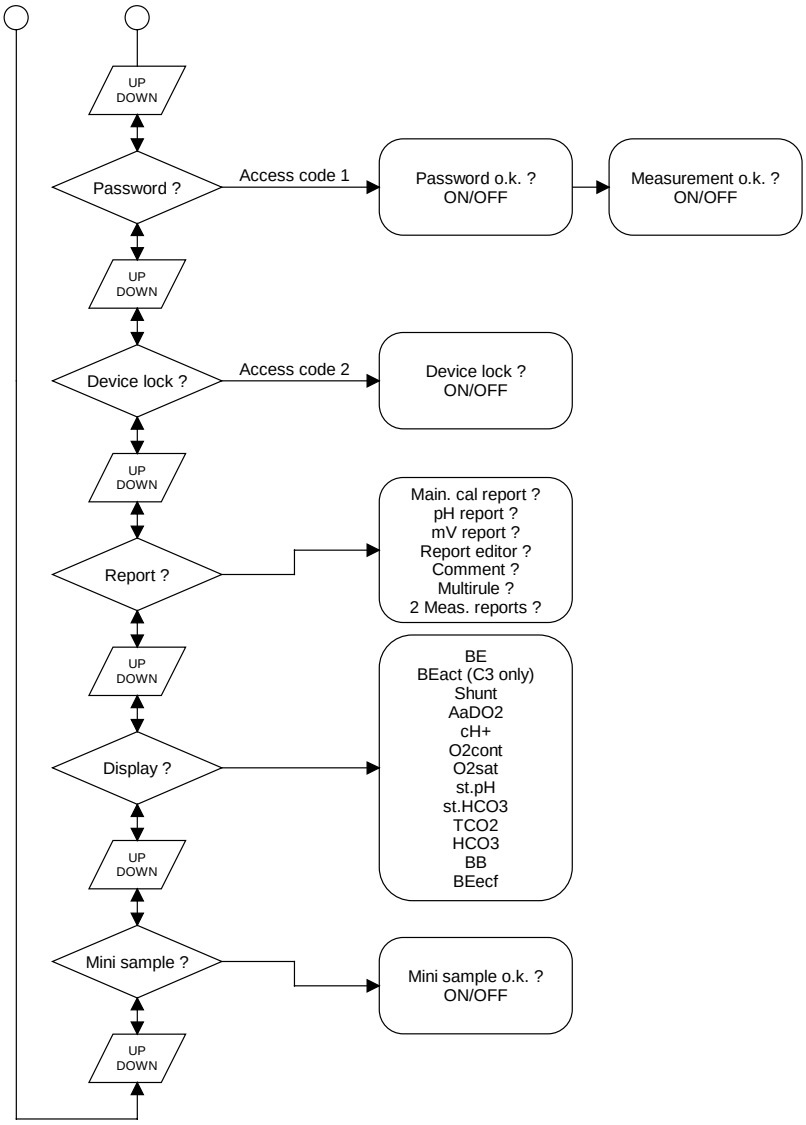

Fig. 3-19: Menu - Settings (AVL COMPACT 2 and 3)

Menu - Measurement / QC measurement / External sample
(AVL COMPACT 2 and 3)

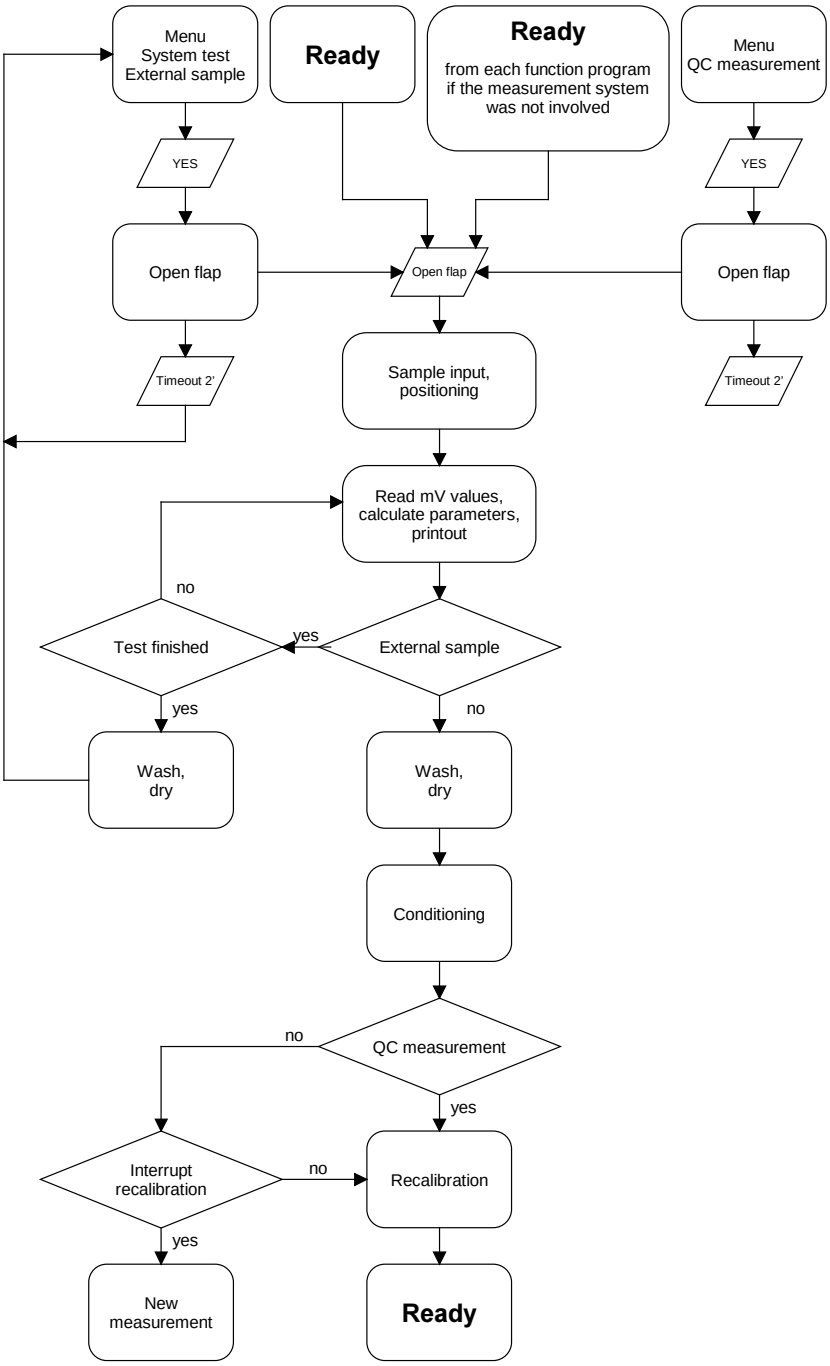

Fig. 3-20: Menu - Measurement/QC measurement/External sample
(AVL COMPACT 2 and 3)

Menu - Sample input / Positioning
(AVL COMPACT 2 and 3)

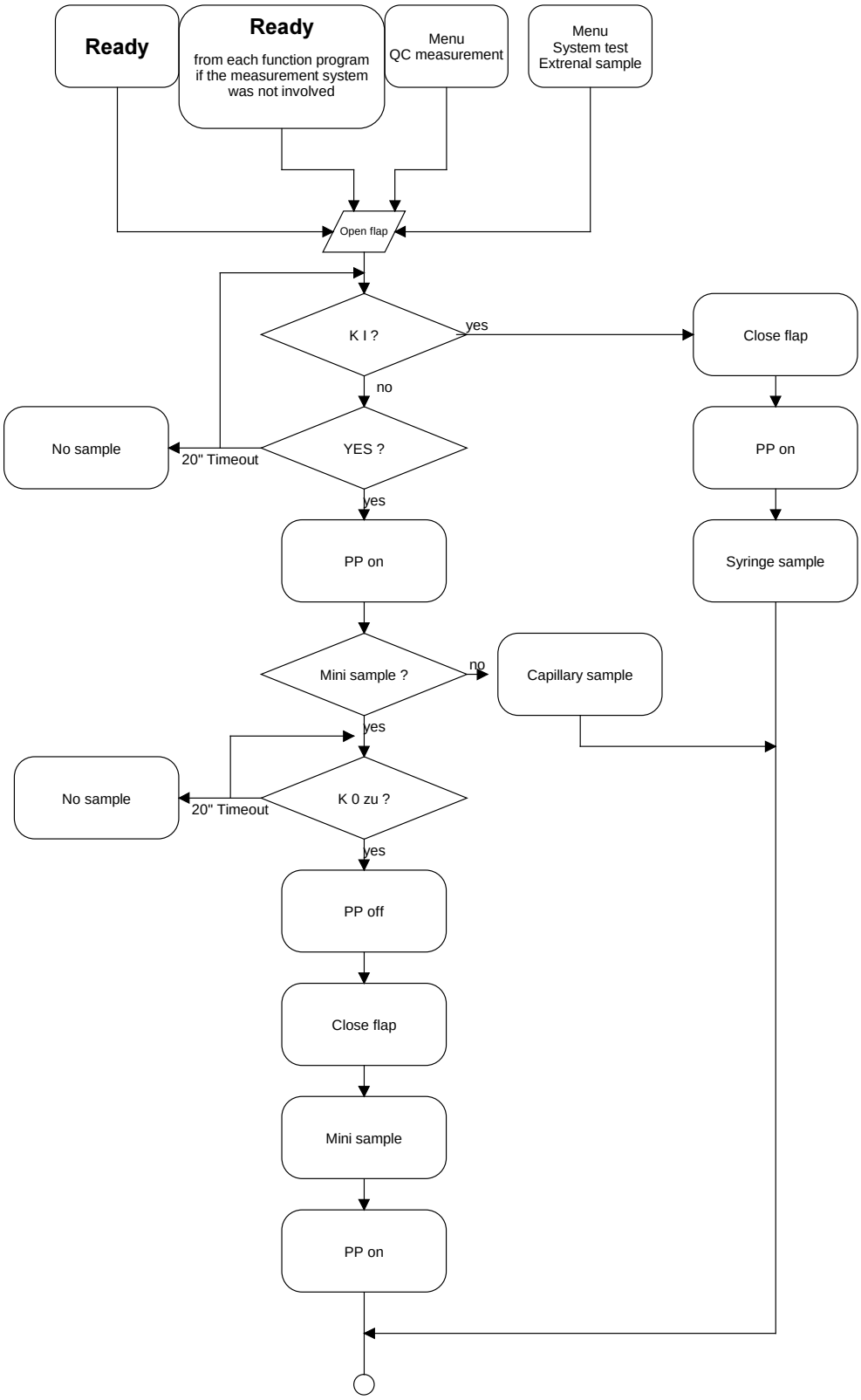

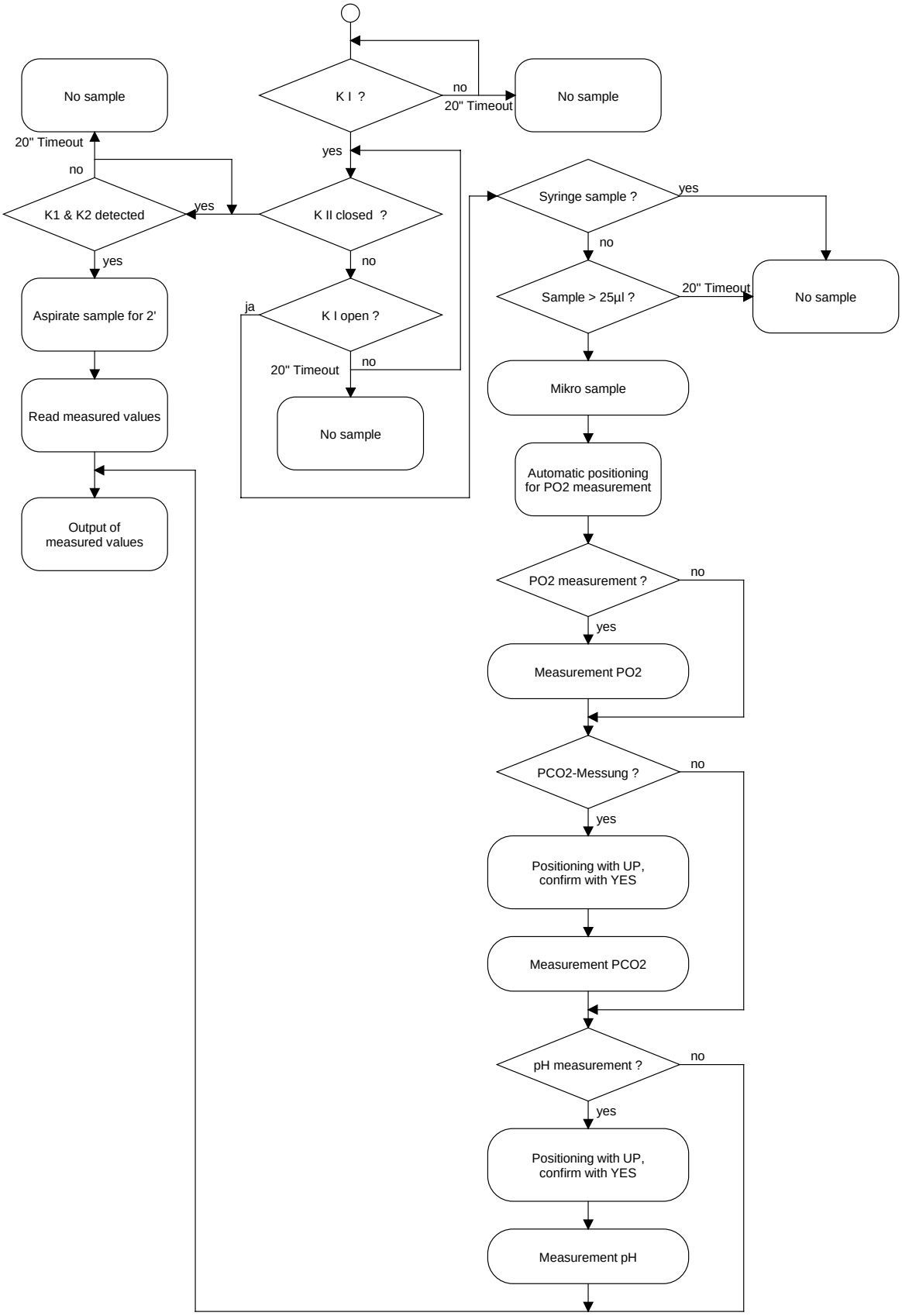

Fig. 3-21: Menu - Sample input, Positioning (AVL COMPACT 2 and 3)

Menu - Ready
(AVL COMPACT 2 and 3)

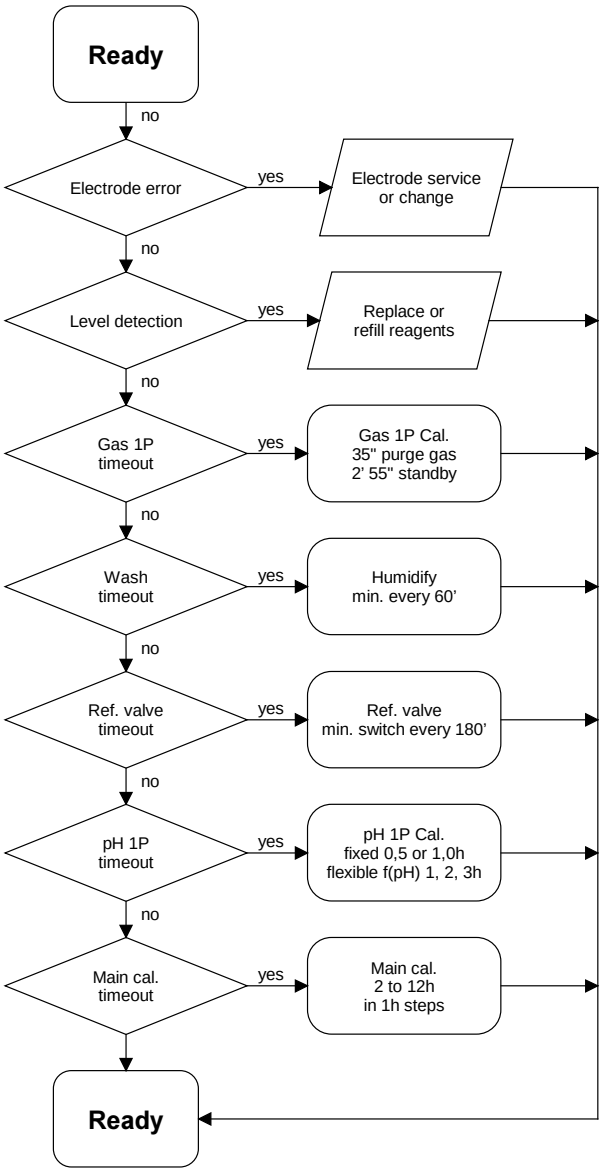

Fig. 3-22: Menu - Ready (AVL COMPACT 2 and 3)

Menu - Calibrations
(AVL COMPACT 2 and 3)

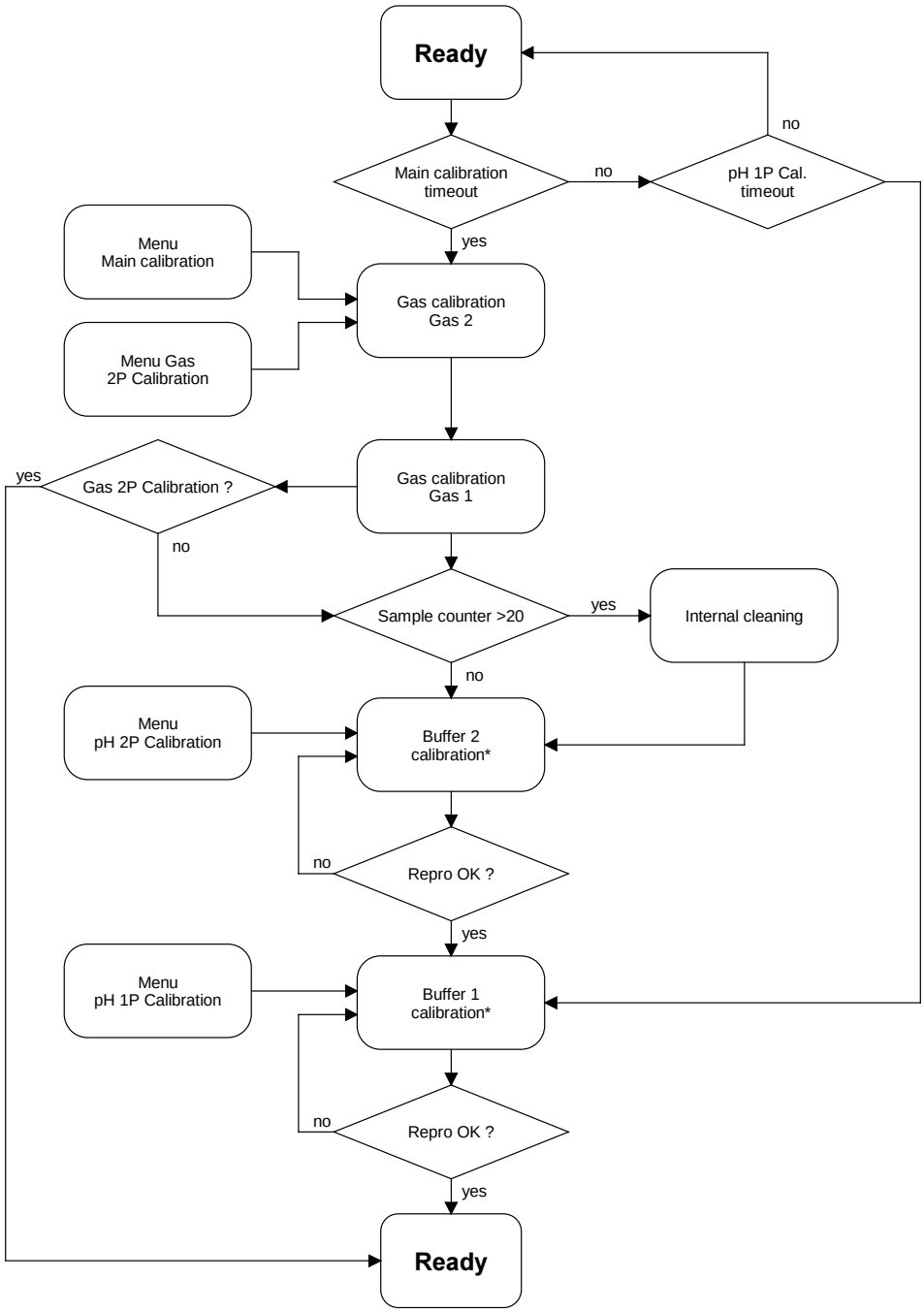

Fig. 3-23: Menu - Calibrations (AVL COMPACT 2 and 3)

* During buffer aspiration a calibration of the volume determination for the detection of the micro sample will be performed.
The filling time of the measuring chamber and tear-off time of the micro sample is indicated at the mV-report (see Operator's Manual, chapter 12).
(The filling time of the measuring chamber is detemined as the time of the response of KI to the response of KII)

4 INSTALLATION / SHUTDOWN

Installation **4-1**
Environment 4-2
Solenoid valve relief clamps 4-2
AVL COMPACT 1 4-2
AVL COMPACT 2 and 3 4-3
Peristaltic pump tubes 4-5
Filling and connecting the bottles 4-5
Waste container 4-5
Wash water container (RINSE) 4-5
pH-Reference solution, Buffer 1, Buffer 2 (AVL COMPACT 2 and 3 only), Cleaning solution 4-6
Calibration gas connection 4-7
AVL COMPACT 1 4-7
AVL COMPACT 2 and 3 4-8
Electrodes 4-9
pH-Reference electrode (white) 4-9
Set time/date 4-12
Inserting printer paper 4-13

Shutdown **4-14**
Longer than 3 Days 4-14
Rinse and dry the tubes 4-14
Electrode care 4-16
Releasing the peristaltic pump tubes 4-16
Releasing the tubes 4-17
AVL COMPACT 1 4-17
AVL COMPACT 2 and 3 4-18
Storage, Transportation 4-19

4 Installation / Shutdown

This chapter describes the installation and shutdown procedures.

Installation

After the AVL COMPACT has been unpacked and placed in a location, according to meeting the requirements described in Chapter 1, the following steps should be performed:

Check whether analyzer and accessories are complete and undamaged. Check contents against the supplied packing list.

If parts are missing inform your AVL representative. In case of damage inform your carrier immediately. Keep analyzer and packing material until any queries have been addressed.

***NOTE**:* *Packing may vary by country and slight variation from the accessories listed in the Operator's Manual, chapter 12. Contact your AVL representative for your specific list.*

Description

1 set	dummy electrodes (four pieces)
1 pcs.	tubular lamp 28 V
1 pcs.	80 mAT / 250 V (F1/F2)
1 pcs.	1.6 AT / 250 V (F3 / mains fuse)
2 pcs.	3.2 AT / 250 V (F4)
1 pcs.	nozzle cleaning needle
1 pcs.	tubing set for peristaltic pump
1 pcs.	fill port
1 pcs.	quad ring seal for pH-Reference Solution bottle (28.17 x 3.53 mm)
1 pcs.	quad ring seal for measuring chamber (1.06 x 1.25 mm)
1 pcs.	quad ring seal for waste (50.4 x 3.53 mm)
1 pcs.	leak proof adapter (measuring chamber valve)
1 psc.	power cable (∅ = 1.5 mm^2; length = apporx. 2 m)
1 pcs.	sample drip tray
1 pcs.	Operator's Manual

Environment

Select the location for the analyzer according to the following hints:

- Ambient temperature: +15 °C to + 32 °C (50 °F to 90 °F)
- Avoid direct sunlight.
- No explosive and/or corrosive gases in the air (anesthetic mixtures etc.).
- Relative humidity: 20 - 85.
- No electrostatic and/or electromagnetic devices near the analyzer (Electromotors, transformers, x-ray devices, immediate vicinity of mobile telephones.....).
- Prevent vibrations and use a stable, level working environment (max. ± 1 degree inclination).
- Space around the analyzer for proper operation (min. 20 cm / 8 inch).
- Enough space around the analyzer off approx. 20 cm (8 inch) to place the gas bottles, to operate the gas valves and to read the gas manometers.

Solenoid valve relief clamps

In the AVL COMPACT analyzer, relief clamps are inserted under the solenoid valves to prevent tube damage.
Before installing the analyzer remove the relief clamps and reinsert it during shutdown procedure.

NOTE: *Do not forget to remove the relief clamps, otherwise no proper start up operation will occur.*
Slightly pull the armature of the valves when removing the relief clamps.
Take care for the solenoid valve relief clamps, you will need it for a possible later shutdown.

Open the cover of the analyzer to gain access to the relief clamps.

AVL COMPACT 1

Four of them are located to the right of the measuring chamber (see Fig. 4-1 or Fig. 4-2), one to the right of the peristaltic pump (see Fig. 4-5).
Open the bottle compartment cover and remove the four red relief clamps from the solenoid valves in the bottle compartment (see Fig. 4-3).

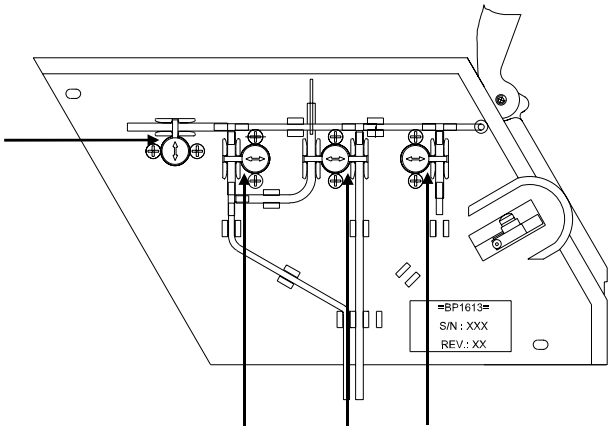

Fig. 4-1: Solenoid valve relief clamps - Fill port module C1 (AVL COMPACT 1 to SN 1000)

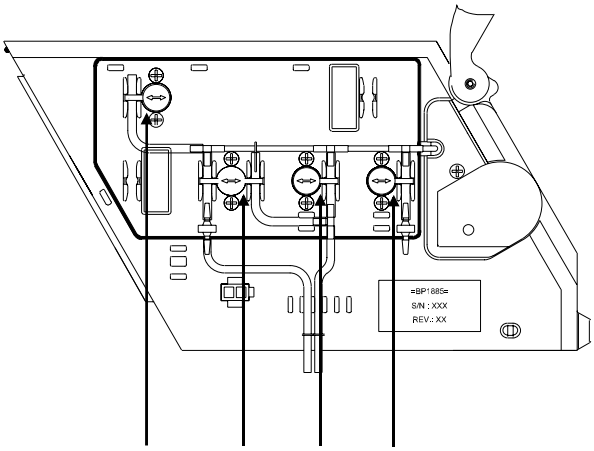

Fig. 4-2: Solenoid valve relief clamps - Fill port module C1
(AVL COMPACT 1 from SN 1000 on)

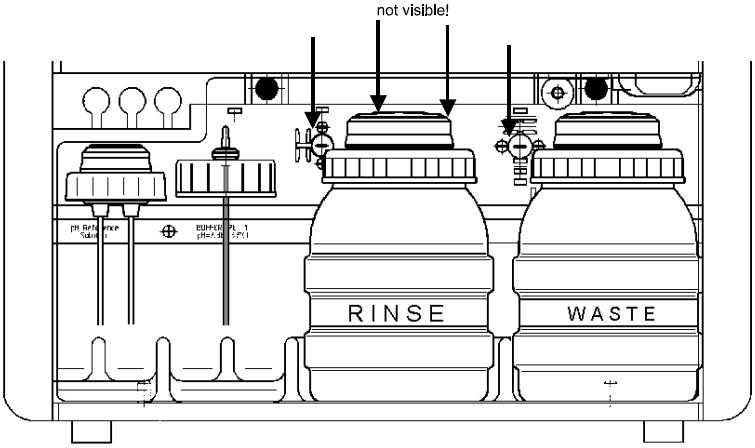

Fig. 4-3: Solenoid valve relief clamps - Bottle compartment C1

AVL COMPACT 2 and 3

Six of them (V3, V4, V5, V7, V11, V12) are located to the right of the measuring chamber (see Fig. 4-4), one to the right of the peristaltic pump (see Fig. 4-5).
Open the bottle compartment cover and remove the four red relief clamps from the solenoid valves in the bottle compartment (see Fig. 4-6).

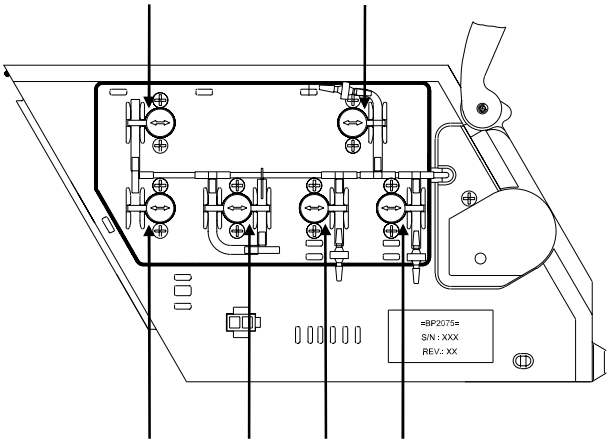

Fig. 4-4: Solenoid valve relief clamps - Fill port module C2/C3

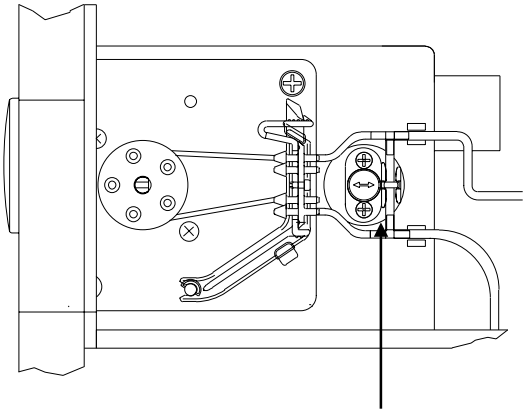

Fig. 4-5: Solenoid valve relief clamps / Peristaltic pump

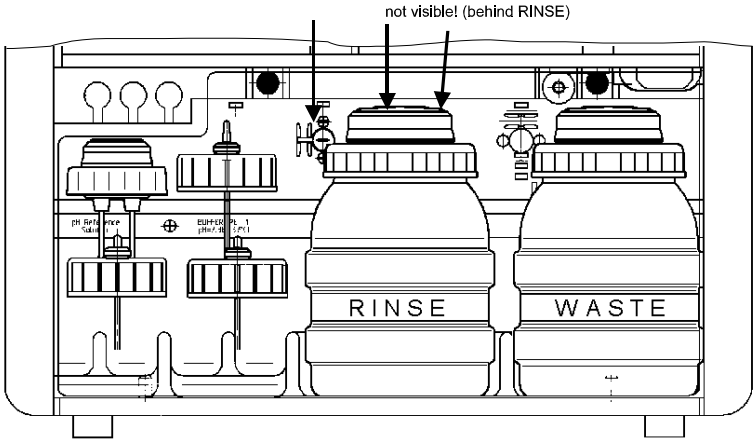

Fig. 4-6: Solenoid valve relief clamps / Bottle compartment C2/C3

Peristaltic pump tubes

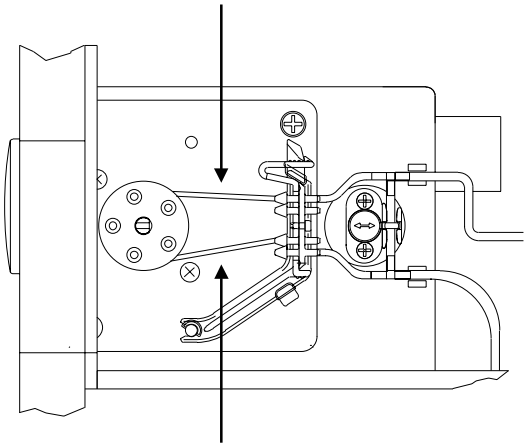

Fig. 4-7: Pump tubes

Procedure

Push end of tension lever to the right and slightly against the pump plate until it locks with a click.

Filling and connecting the bottles

Located under the measuring chamber and the fill port module, the bottle compartment houses the reagents.

NOTE: *Ensure to place the caps to the corresponding reagent bottles and pay attention, that no tube is folded.*

Waste container

Before screwing the cap on the Waste container, ensure that the ring seal is properly in place.
If the seal is in place, screw the cap onto the empty Waste container and insert the bottle into its socket in the bottle compartment.

NOTE: *Ensure that the Waste container is completely airtight to allow a trouble-free operation.*

Wash water container (RINSE)

1. Insert a RINSE reagent, or
2. fill a bottle with distilled water and add one ampoule of RINSE additive.

pH-Reference solution, Buffer 1, Buffer 2 (AVL COMPACT 2 and 3 only), Cleaning solution

The necks of the bottles are sealed with aluminum foil.
Remove the foil by cutting along the edge of the bottle neck with a clean knife.

***NOTE**: When removing the foil, make sure that the fluids are not contaminated.*

Screw the caps tight on the bottles and place them in their sockets in the bottle compartment.

***NOTE**: Before screwing on the cap of the pH-Reference solution, ensure that the ring seal is properly in place.*
Ensure that the cap is screwed on finger tight to allow for the build-up of pressure which is necessary for operation.

***NOTE**: After installing the pH-Reference solution, do not switch on the analyzer before a pH-Reference electrode has been installed !*

Calibration gas connection

AVL COMPACT 1

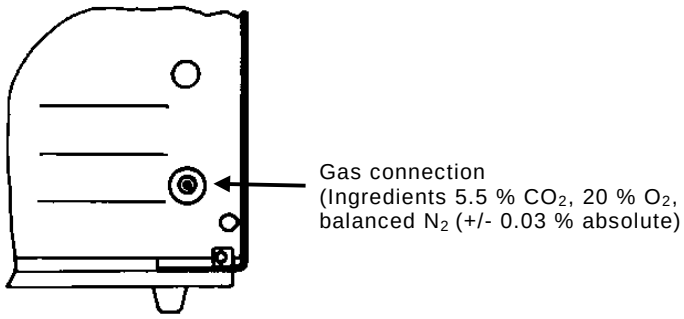

Fig. 4-8: Gas connection

Connect the gas supply as follows:

1. Check if sealing ring is assembled on the regulator. If yes, remove the sealing ring and assemble the new one wich is shipped with the gas cylinder (see Fig. 4-10).
2. Install the pressure regulator on the new gas cylinder.
3. Insert the new cylinder in the holder and secure it.
4. Open the valve of the new gas cylinder and purge tube for some seconds with gas.
5. Close the valve again.
6. Connect the tube to the connector nipple on the rear panel of the AVL COMPACT.
7. Open the valve of the gas cylinder again.

NOTE: *The secondary pressure has to be between 3 and 4 bar.*
The primary pressure has to be more than 10 bar.

The length of the gas tube is limited at 1m (3 ft). Avoid large distances between analyzer and gas cylinder.
Please contact your AVL representative if larger distances are necessary.

AVL COMPACT 2 and 3

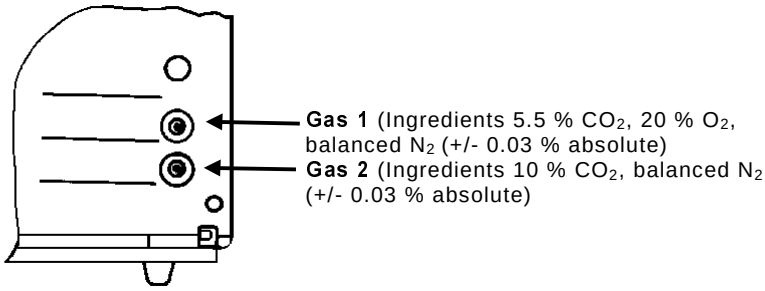

Fig. 4-9: Gas connection

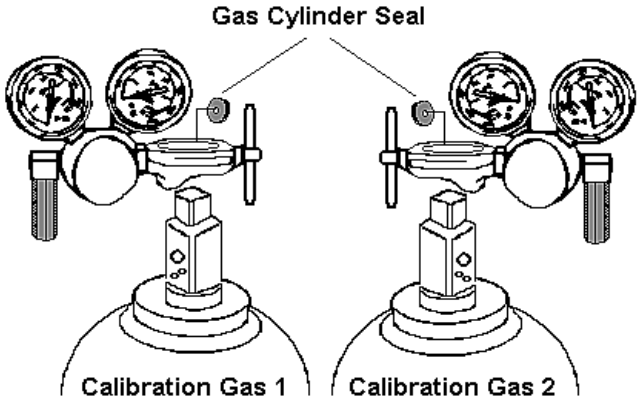

Fig. 4-10: Position of calibration gas cylinder

Connect the gas supply as follows:

1. Check if sealing rings are assembled on the regulators. If yes, remove the sealing rings and assemble the new one wich are shipped with the gas cylinders (see Fig. 4-10).
2. Install the pressure regulators on the new gas cylinders.
3. Insert the new cylinders in the holders and secure them.
4. Open the valves of the new gas cylinders and purge tubes for some seconds with gas.
5. Close the valves again.
6. Connect the tubes to the connector nipples on the rear panel of the AVL COMPACT.
7. Open the valves of the gas cylinders again.

NOTE: *Do not mix up bottles and tubes.*

The secondary pressure has to be between 3 and 4 bar.
The primary pressure has to be more than 10 bar.

The length of the gas tube is limited at 1m (3 ft). Avoid large distances between analyzer and gas cylinder.
Please contact your AVL representative if larger distances are necessary.

Electrodes

NOTE: *Zero maintenance pH / Blood gas electrodes do not require any preparation.*

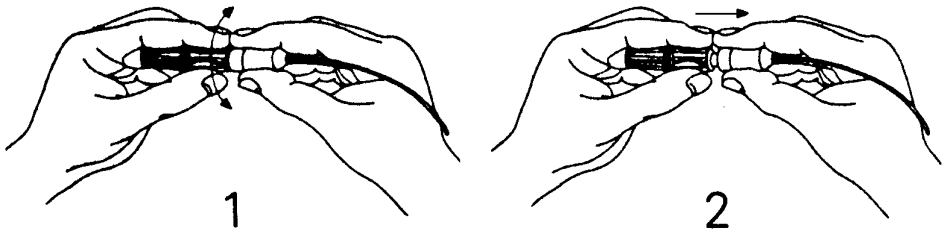

Fig. 4-11: Removal of transport housing

Before installing the remembranable electrodes remove transport housing (twist **(1)** and pull **(2)**) and fit them with a new electrode housing (see chapter 9, "Care and Maintenance of Remembranable pH / Blood Gas Electrodes ").

NOTE: *Save tranport housing for possible storage or transport.*

The electrodes do not require cleaning with electrode paste at this stage. Install the electrodes from right to left in the following sequence:

– PO_2-Electrode (blue)

– PCO_2-Electrode (green)

– pH-Electrode (gray)

Pull out the electrode clips and insert the electrodes into the measuring chamber block.
Secure the electrodes with the clips and connect the electrode cables.

pH-Reference electrode (white)

1. Carefully remove the protective caps from the pH-Reference Electrode nipples. Connect the unmarked tube to the lower nipple and the yellow-coded tube to the yellow-coded upper nipple.

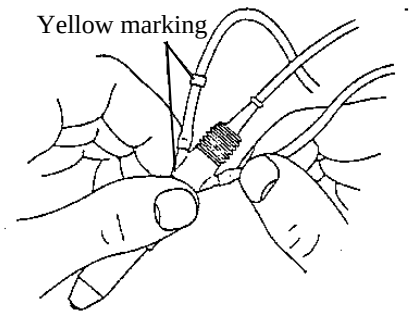

Fig. 4-12: pH-Reference electrode - yellow marking

Replace the pH-Reference electrode housing with a new one.
Replace the pH-Reference electrode housing with a new one.
Fill the pH-Reference electrode with pH-Reference solution, before inserting into the measuring chamber block.

2. Plug the power cord into an electrical outlet and switch on the analyzer.
3. The following display appears:

```
        COMPACT[1]

Please wait
```

When the correct temperature is reached, the following display with the correct temperature appears:

```
WARM UP
MC-temp:   37 °C
SP-temp:   37 °C
```

During the warm up there is a conditioning of the PO_2- and PCO_2-Electrode.

```
WARM UP            299

Please wait
```

4. Check the automatic filling function of the pH-Reference electrode housing. If the pH-Reference electrode is filled, continue with item 5.

   If the pH-Reference electrode was not filled:

   Take pH-Reference electrode out of the measuring chamber.

NOTE: *Do NOT disconnect cable and tubes !*

Activate:

Maintenance? YES 1x ∨

Ref. Electrode? YES

```
USER PROGRAMS
Ref. electrode

Fill electrode ?
```

[1] Depending on which device type 1, 2 or 3 is displayed.

Press YES .

This function activates the automatic filling of the pH-Reference electrode housing.
On completion of the filling procedure, the following display appears:

```
USER PROGRAMS
Ref. electrode

Fill electrode ?
```

5. Press NO when the electrode is filled.

The permeability of the pH-Reference electrode diaphragm should be tested. Carefully touch the electrode tip with a clean dry tissue.

```
USER PROGRAMS
Ref. electrode

Check permeability ?
```

Press YES to confirm.

Observe the electrode tip for the formation of a small droplet of pH-Reference solution.

```
USER PROGRAMS
Ref. electrode

Check permeability ?
```

If no droplet has formed on the tip, press YES to confirm and repeat this procedure, otherwise exit this program by pressing ESC .

If again no droplet has formed replace the pH-Reference electrode housing in accordance with the instructions given in Chapter 9, "Troubleshooting / Maintenance".

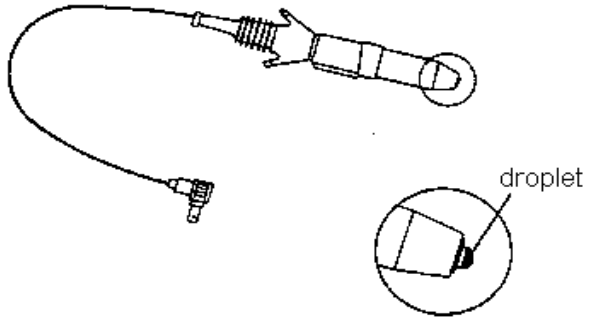

Fig. 4-13: pH-Reference electrode - Droplet

If the droplet has formed, wipe it off carefully, insert the electrode into the measuring chamber and secure with the clip.

Press ESC to exit the program.

Set time/date

Activate:

Settings?	YES 2x ∨
Timings?	YES
Time/Date?	YES

```
USER PROGRAMS
Th, 04-Jul-96    14:10

Time/Date o.k. ?
```

On the display the day is blinking.
You may change the day shown by pressing ∨ or ∧.
Confirm the selected day by pressing YES .

The date is blinking.
Enter the selected date, month, year and time (hour / minute) step by step.
As soon as the last character is confirmed by pressing YES , the display will fade out.

At this point, you may either select another time setting by pressing ∨ or ∧ and activate the selected setting by pressing YES or exit from the user program by pressing ESC.

Inserting printer paper

1. Push the paper roll holder slightly to the side and
2. insert a new paper roll.
3. Insert the paper in the feeder.
4. Press the paper feed button, until the paper appears at the outside of the cover.

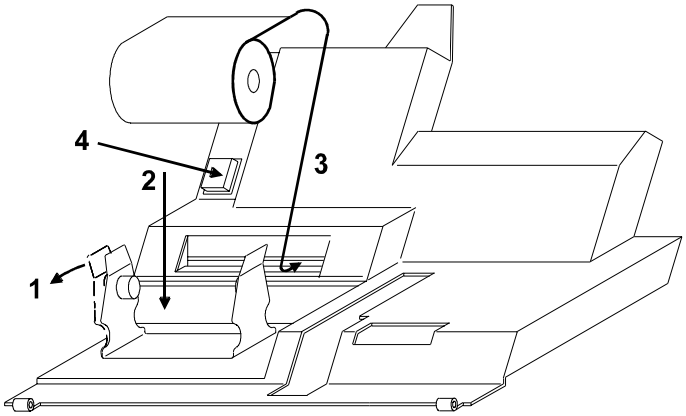

Fig. 4-14: Insert printer paper

***NOTE**: The paper is heat-sensitive on one side only. Make sure that it is inserted correctly.*

Shutdown

If the AVL COMPACT is to be put out of use for a longer period of time, it is possible to activate the economy standby mode.
During this time, the analyzer does not need any Buffer, but the electrodes have the optimal conditioning.

Activate:

User programs?	YES 5x ∨
Settings?	YES
Man standby?	YES ∧ YES ESC

At AVL COMPACT 2 and 3 you have further the possibility of an "Automatic standby".
For details, see Operator's Manual, Chapter 5 "Settings" section " Manual Standby" or "Automatic Standby".
This economy standby mode can be cancelled at any time. After performing the necessary calibration the analyzer is READY.

Longer than 3 Days

If your AVL COMPACT is to be shutdown completely for more than 3 days, you have to empty the tubes, remove the electrodes from the measuring chamber and secure some of the tube valves with the relief clamps.

Procedure

```
READY              9:57
For measurement
open the flap
User programs ?
```

Rinse and dry the tubes

1. Take both tubes off the pH-Reference electrode and connect them with each other by means of a nipple. Close the two nipples of the pH-Reference electrode with the two supplied red stoppers.

   NOTE: *A capillary tube may also be used instead of a nipple.*
   Do not insert the ends of the capillary into the tubes deeper than 10 mm.

2. Empty container for Buffer, Cleaning solution (AVL COMPACT 2 and 3 only), pH-Reference solution and, rinse them, fill them with distilled water and put them back into the analyzer.

3. Activate:

User programs? YES 4x ▽

Maintenance? YES 4x ▽

Shutdown? YES

```
USER PROGRAMS
Shutdown

Are you sure ?
```

Press YES.

```
USER PROGRAMS
Shutdown

Rinse ?
```

Press YES.

A rinsing and drying cycle is now activated during which the entire reagent inlet and outlet tubing system is rinsed and dried.

Empty the bottles of Buffer 1, Buffer 2 (AVL COMPACT 2 and 3 only), Cleaning solution (AVL COMPACT 2 and 3 only), pH-Reference solution and RINSE.

```
USER PROGRAMS
Shutdown

Dry ?
```

Press YES.

```
USER PROGRAMS
Shutdown
Dry activated
```

The liquids are aspirated and the tubing system is dried.

```
USER PROGRAMS
Shutdown
Switch off analyzer !
```

4. Switch off the AVL COMPACT.
5. Close the valves of the calibration gas cylinders.
6. Insert the solenoid valve relief clamps.
7. Empty, decontaminate and dry the Waste container and put it back into the analyzer.

Electrode care

8. Disconnect the electrode cables and lift the electrode clips.
   The electrodes may now be removed.

***NOTE**: Reinsert the electrode clips to avoid losing them.*

Storage for only one day

9. To prevent the electrodes from drying out fill the protective caps with:
   - pH-Electrode: Buffer 1
   - PCO_2-Electrode: PCO_2-Electrolyte
   - PO_2-Electrode: do not fill
   - pH-Reference electrode: pH-Electrode solution

Longer than 1 day

1. Remove the electrode housing from the corresponding electrode.
2. Fill the transport housing with the correponding electrolyte (Exception: PO_2-Electrode).
3. Remove the outside O-ring from the tranport housing for opening the discharge pore.

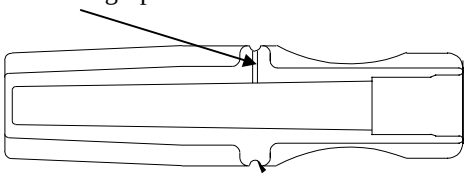

Fig. 4-15: Transport housing

4. Fit the electrodes with the filled transport housing.

Releasing the peristaltic pump tubes

10. Unlock tension lever. Push on hook-shaped until tension lever moves left and pump tube tension is released.
11. Close the cover of the analyzer.

Releasing the tubes

To prevent tube damage in the AVL COMPACT analyzer during tranport, relief clamps are inserted under the solenoid valves to.

NOTE: *The clamps designed for this purpose can easily be removed by lifting the solenoid fixtures.*

AVL COMPACT 1

Four of them are located to the right of the measuring chamber (see Fig. 4-16 or Fig. 4-17), one to the right of the peristaltic pump (see Fig. 4-20).
Open the bottle compartment cover and remove the four red relief clamps from the solenoid valves in the bottle compartment (see Fig. 4-18).

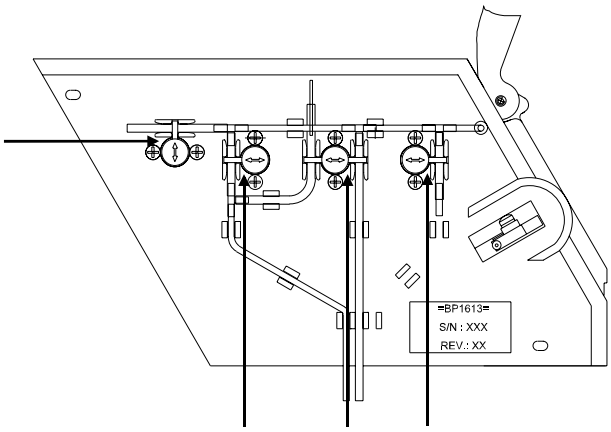

Fig. 4-16: Solenoid valve relief clamps - Fill port module C1
(AVL COMPACT 1 to SN 1000)

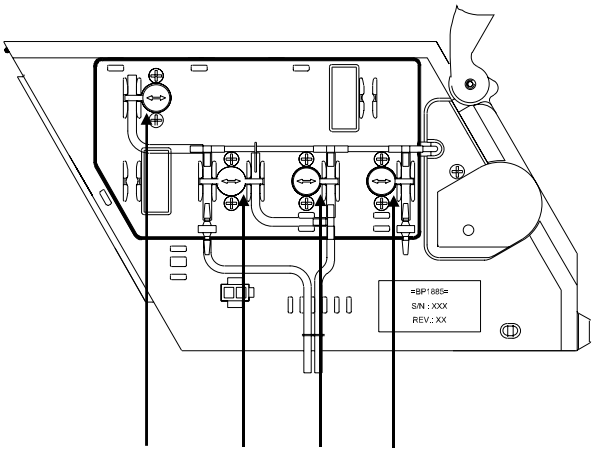

Fig. 4-17: Solenoid valve relief clamps - Fill port module C1
(AVL COMPACT 1 from SN 1000 on)

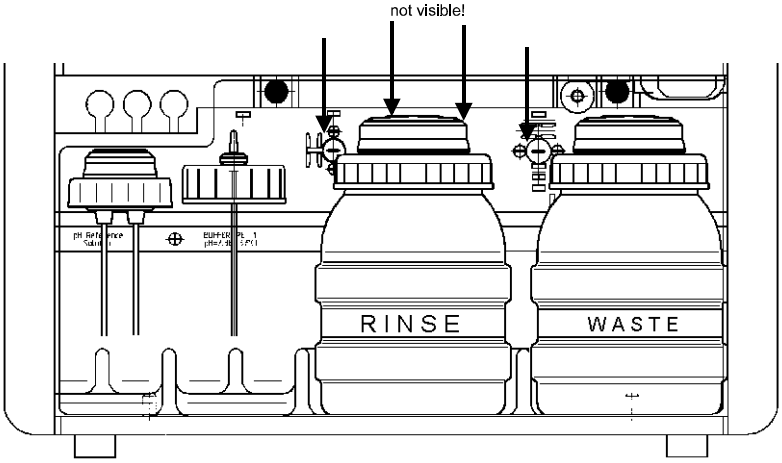

Fig. 4-18: Solenoid valve relief clamps - Bottle compartment C1

AVL COMPACT 2 and 3

Six of them (V3, V4, V5, V7, V11, V12) are located to the right of the measuring chamber (see Fig. 4-19), one to the right of the peristaltic pump (see Fig. 4-20).
Open the bottle compartment cover and remove the four red relief clamps from the solenoid valves in the bottle compartment (see Fig. 4-21).

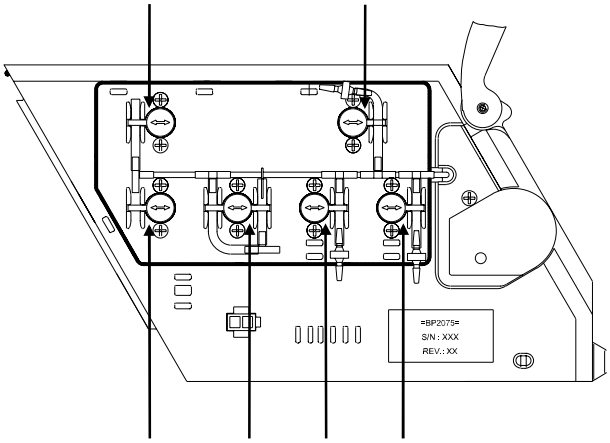

Fig. 4-19: Solenoid valve relief clamps - Fill port module C2/C3

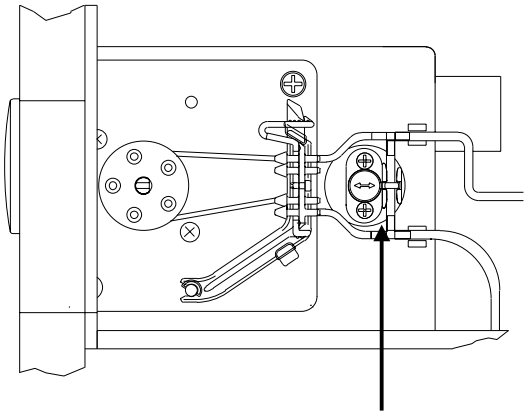

Fig. 4-20: Solenoid valve relief clamps / Peristaltic pump

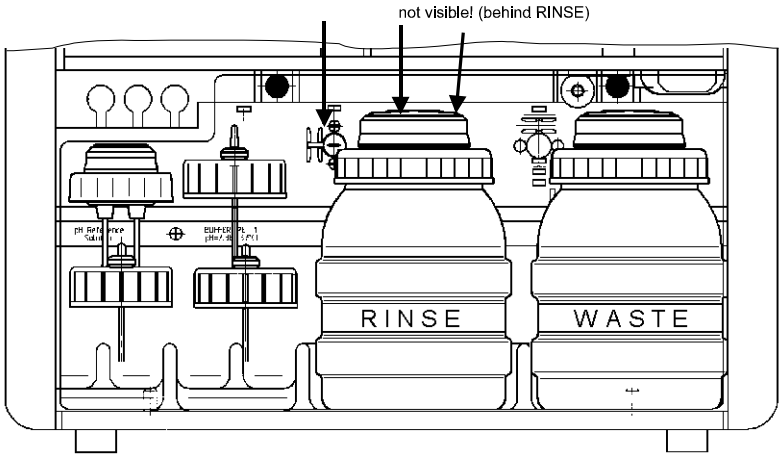

Fig. 4-21: Solenoid valve relief clamps / Bottle compartment C2/C3

13. Close the cover of the analyzer.

Storage, Transportation

14. Protect the AVL COMPACT with a dust cover during storage.
    For transportation purposes use the original shaped parts packing material.

5 MECHANICS

Housing **5-1**

Measuring chamber **5-2**
Measuring chamber block 5-2
Changing the measuring chamber block 5-2
Measuring capillary 5-3
Measuring chamber valve 5-3

Fill port module **5-4**
Fill port 5-7
Sample inlet path 5-8
Valves 5-9
Tubing system 5-9
Hall sensor (AVL COMPACT 1 >SN 1000 and AVL COMPACT 2 and 3) 5-9
Flap switch (AVL COMPACT 1 <SN 1000) 5-9
Flap 5-10

Bottle compartment **5-11**
Gas humidifier (AVL COMPACT 1 only) 5-11
Waste cap 5-12
RINSE cap 5-12
Cap for Buffer 1, Buffer 2 and Cleaning solution 5-13
Cap for pH-Reference solution 5-13

Cover **5-13**
Display 5-15
Keyboard 5-16
Thermal printer 5-16
Connector Board 5-16

KCl pump **5-17**
Setting the pressure 5-17

Vacuum pump **5-18**
Changing the vacuum pump 5-18
Changing the vacuum pump head 5-18

Peristaltic pump **5-19**

Gas valve 1 ..... **5-19**

Gas valve 2 (AVL COMPACT 2 and 3 only) **5-20**

5 Mechanics

CAUTION ! *Before dismounting or mounting mechanical components turn off the analyzer and disconnect from main supply.*

Housing

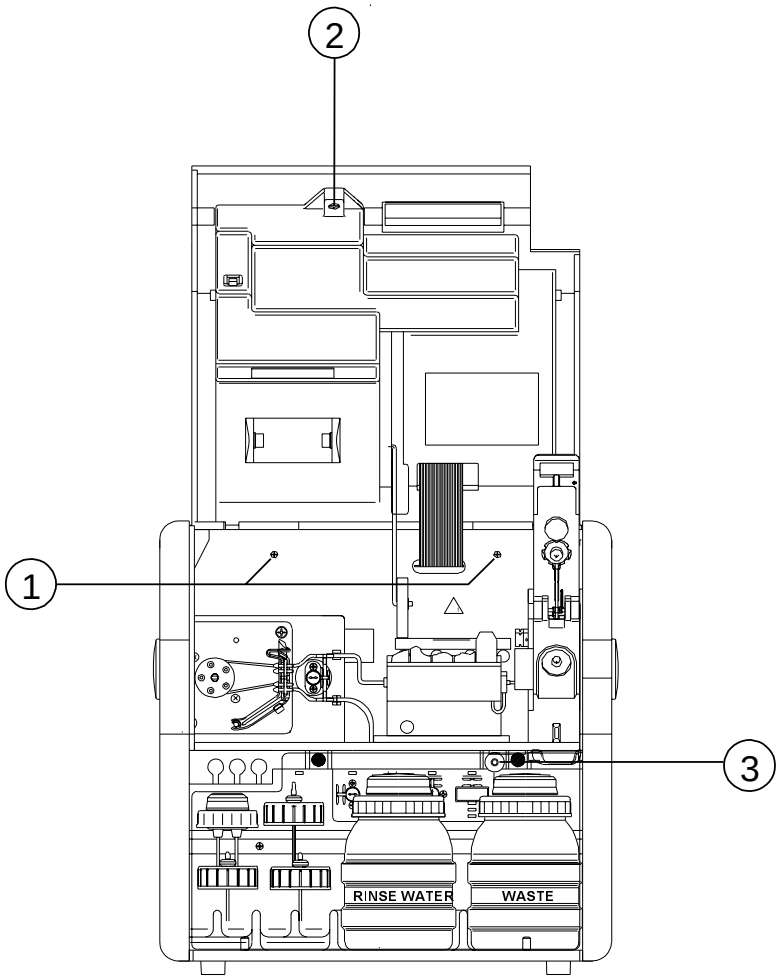

Fig. 5-1: Housing

The plastic housing is the carrier for mechanical and electronic components. The door is fixed on the upper/back housing edge and can be swung out over the frame. Some components (measuring chamber, peristaltic pump, valve unit etc.) are accessible via the front of the analyzer.
The analyzer interior is accessible after removing the rear panel.
In order to assembly or disassembly the aggregates, valves, KCl- and vacuum pump, it is necessary to pull back the housing console after removing the 4 screws (see Fig. 5-1, **1**; two screws are accessible from the rear of the analyzer).

Measuring chamber

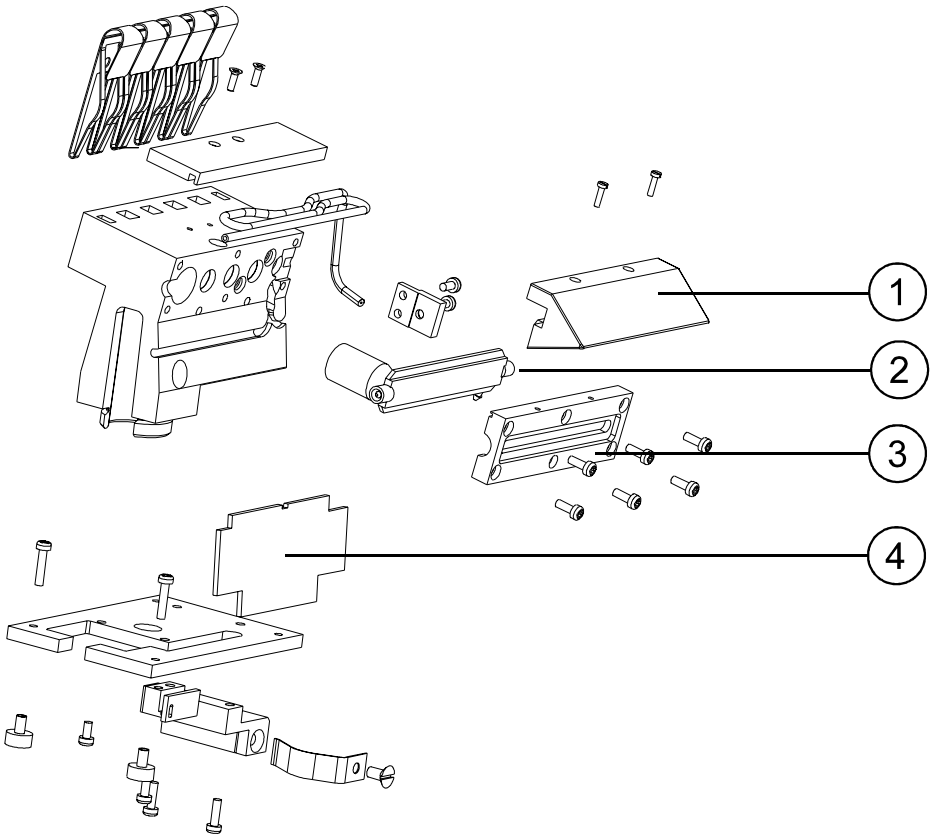

Fig. 5-2: Measuring chamber

Measuring chamber block

The measuring chamber block is thermostated at 37 °C ± 0.1 °C (98.6 °F).
The measuring capillary is fastened to the block with a holding flange (see Fig. 5-2, **3**).
The electric connection is established with spring contacts.
The prism (see Fig. 5-2, **1**) is illuminated by a light guide (see Fig. 5-2, **4**) and enables clear view of the measuring capillary and the electrode tips.

Changing the measuring chamber block

When changing the measuring chamber block please proceed as follows:

1. Disconnect the measuring chamber plug from the measuring chamber plate.
2. Pull out the locking knob (see Fig. 5-1, **3**) until resistance is felt.
3. Push the block to the left and remove in upward direction.

4. Check the O-ring (see Fig. 5-2, **2**) in the measuring capillary.
5. The measuring chamber block is positioned in the guiding and is moved to the right, whereby the sample inlet path should reach the measuring capillary without straining.
6. Press the locking knob (see Fig. 5-1, **3**) to secure the block. A spring presses the block onto the sample inlet path in the fixed position.
7. Connect the measuring chamber plug to the measuring chamber plate.

Measuring capillary

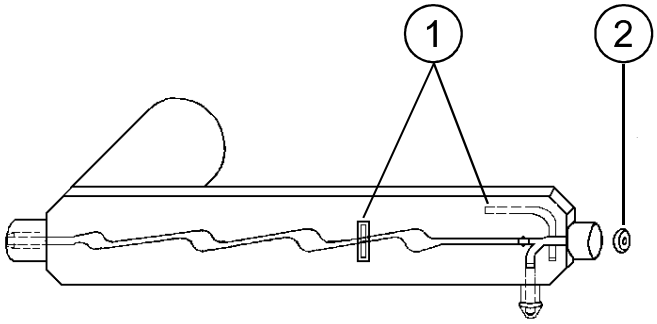

Fig. 5-3: Measuring capillary

For positioning of sample, two precious metal contacts (see Fig. 5-3, **1**) are used in the measuring capillary. The contacting takes place by plug-in spring contacts in the measuring chamber block.
After removing the prism and holding flange, the measuring capillary can be removed towards the front, after pushing the measuring chamber block to the left.
If heavily soiled, the measuring capillary can be immersed in protein remover (e.g. AVL Deproteinizer). The measuring capillary quad-ring should be renewed if sealing problems occur (see Fig. 5-3, **2**)

Measuring chamber valve

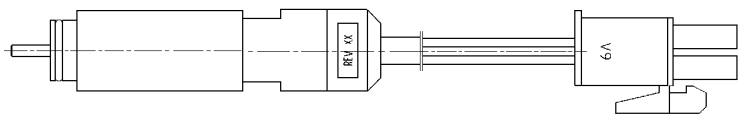

Fig. 5-4: Measuring chamber valve

The measuring chamber valve consists of a bistable magnetic valve and a sealing sleeve with built-in membrane. The O-ring provides secure seating of the sealing sleeve on the valve and should be renewed if necessary.
At AVL COMPACT 1, SN <1000 the measuring chamber valve is directly connected to **J10** on the COBA Control Board.

Fill port module

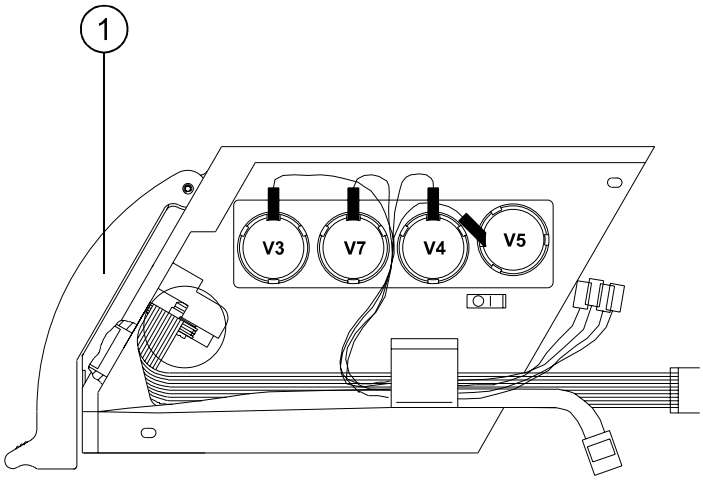

Fig. 5-5: AVL COMPACT 1 <SN 1000

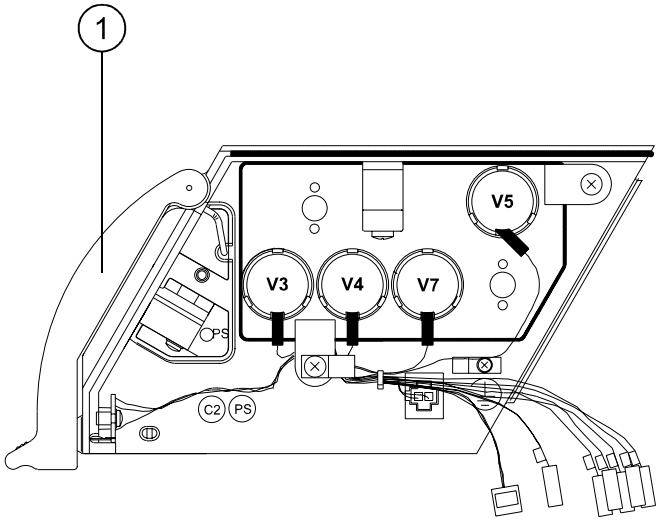

Fig. 5-6: AVL COMPACT 1 >SN 1000

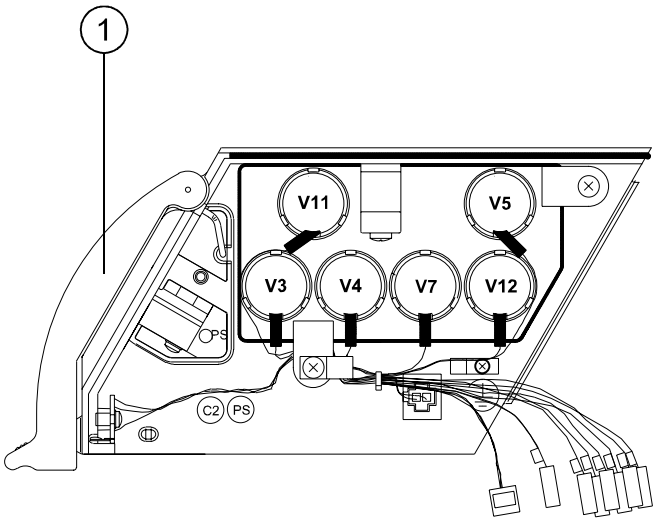

Fig. 5-7: AVL COMPACT 2 and 3

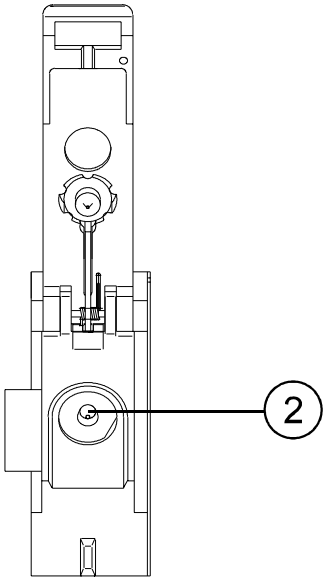

Fig. 5-8: Fill port module AVL COMPACT 1, 2 and 3

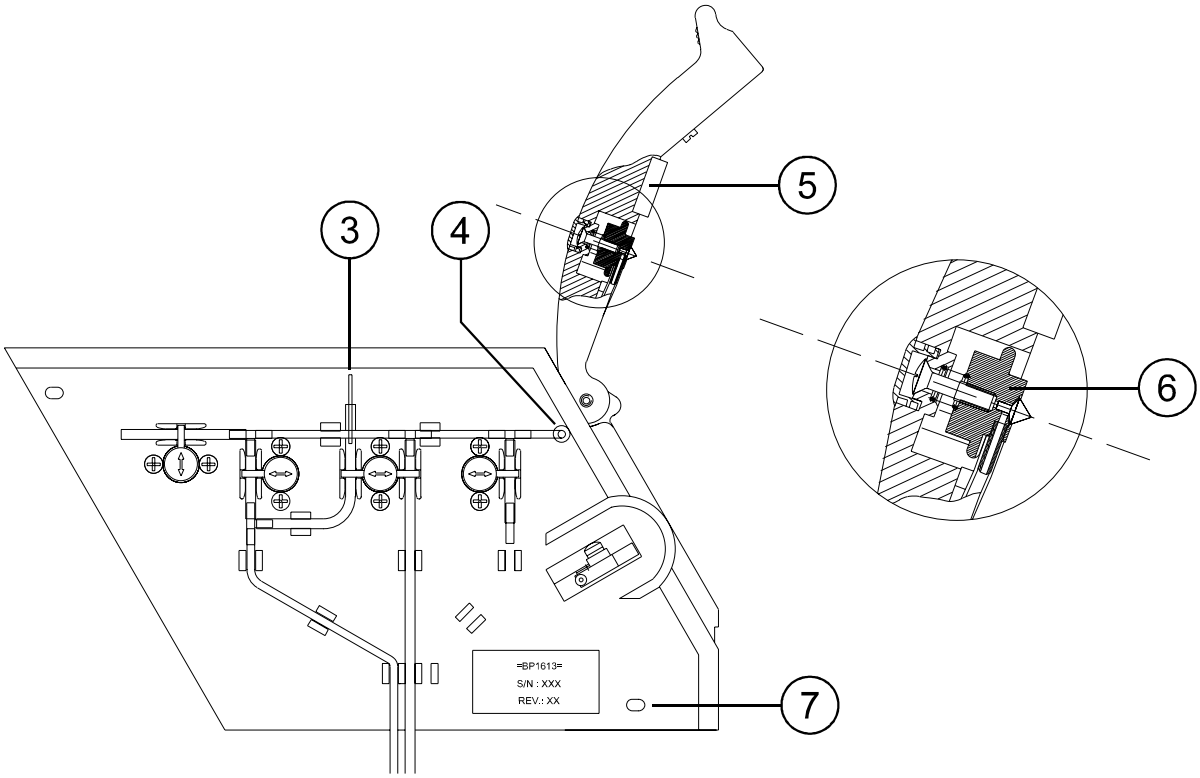

Fig. 5-9: AVL COMPACT 1 <SN 1000 (side view 2)

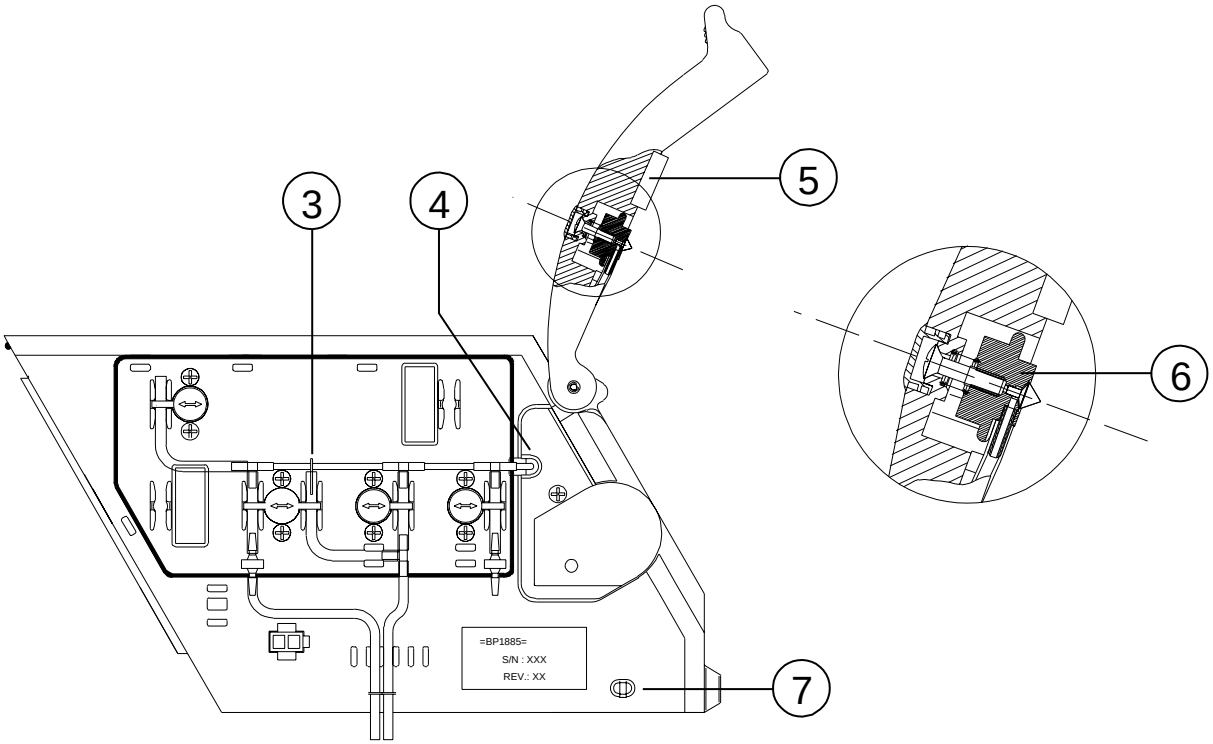

Fig. 5-10: AVL COMPACT 1 >SN 1000 on (side view 2)

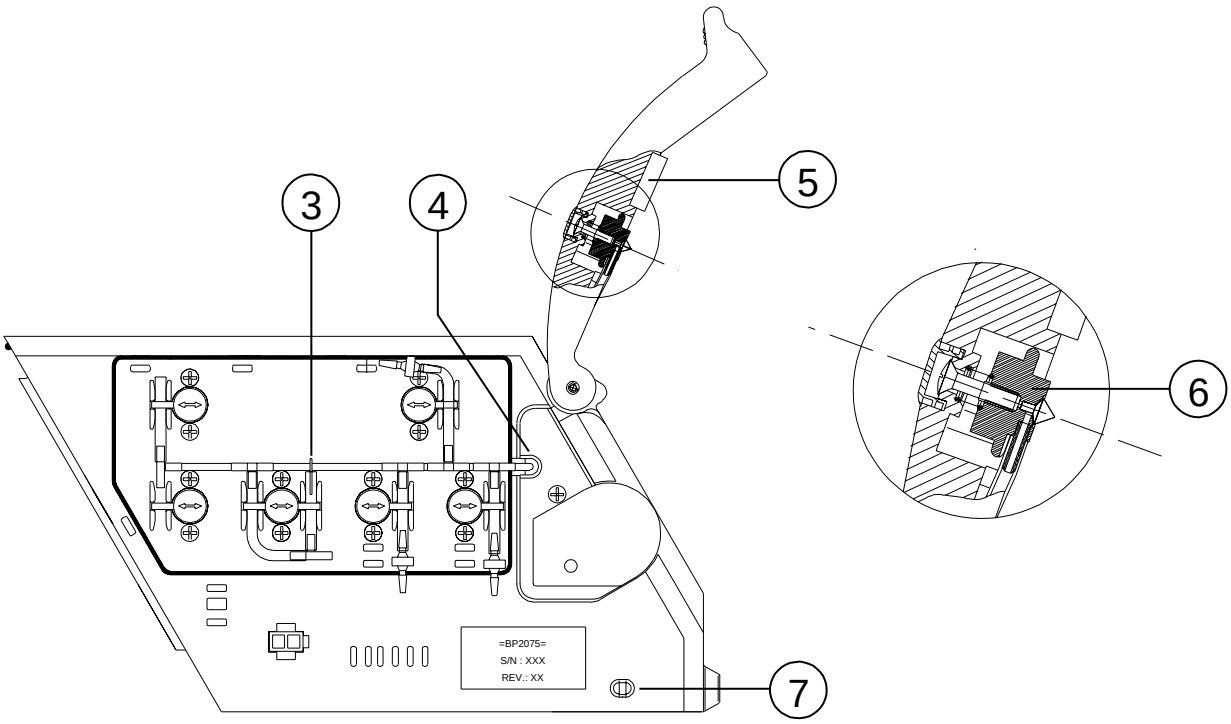

Fig. 5-11: AVL COMPACT 2 and 3 (side view 2)

Calibration media (Buffer,Gas), wash water and sample material are conducted through the fill port module to the measuring chamber.
The complete fill port module can be removed after loosening the 2 screws (see Fig. 5-9, Fig. 5-10 and Fig. 5-11, **7**) when the measuring chamber is undocked. After removing the input unit the valves (J18, J21, J22, J23, J24, J19 and J20 at AVL COMPACT 2 and 3), the hall sensor (J25) and the sample inlet path (J26) have to be disconnected.

Fill port

The fill port, located directly on the sample inlet path (Fig. 5-8, **2**) allows universal input of capillary and syringe samples without an adapter. The fill port can easily be removed if dirty or damaged. When mounting a new fill port, it can be dampened with distilled water or Cleaning solution to allow easier positioning. The fill port must be pressed in fully to guarantee proper sealing between fill port and flap.

Sample inlet path

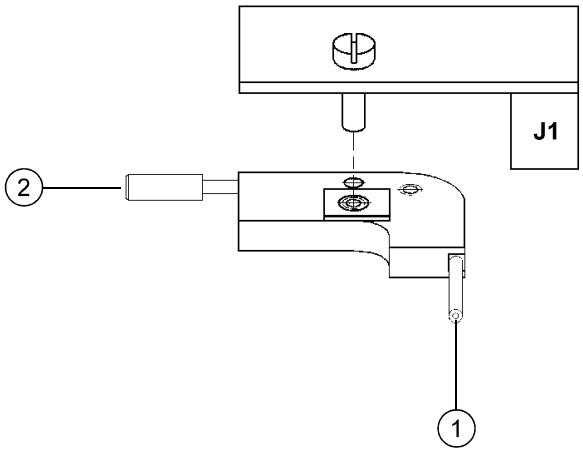

Fig. 5-12: Sample inlet path - AVL COMPACT 1
and AVL COMPACT 2 <SN 1500

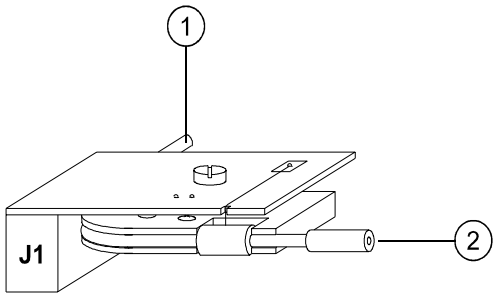

Fig. 5-13: Sample inlet path - AVL COMPACT 2 >SN 1500
and AVL COMPACT 3

The sample inlet path is thermostated at 37 °C and connects the fill port (see Fig. 5-12 and Fig. 5-13 , **1**) with the measuring chamber (see Fig. 5-12 and Fig. 5-13, **2**).
If the sample input path is clogged, it can be flushed with a syringe when the measuring chamber is undocked. Possible glass splinters in the sample inlet path resulting from a broken capillary, can be carefully removed with a thin wire when the measuring chamber is undocked (see chapter 9, "Trouble-shooting").

The following applies to devices with serial numbers <1500:
After changing the sample inlet path, it is necessary to reset the sample path temperature (see chapter 8, "Adjustments"). The required reference value is labelled at the plug **J1** (see Fig. 5-12).
The cable from the C2-Connector Board has to be disconnected from the plug J1 of the SI-Board.

AVL COMPACT 1, 2 and 3 systems with serial numbers >1500 no longer require adjustment of the sample inlet path temperature.

In AVL COMPACT 2 and 3 systems with serial numbers >1500, an additional contact K0 is assembled in the sample inlet path, which permits measuring mini samples.

Valves

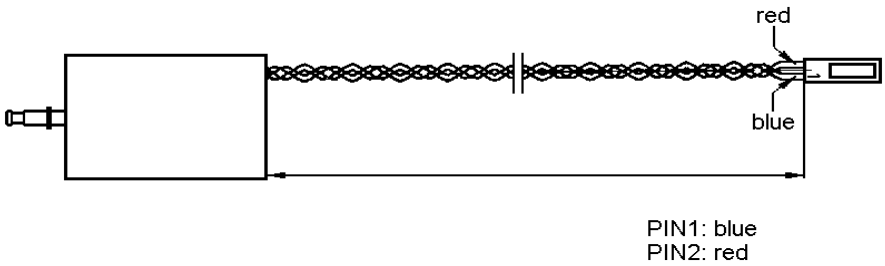

Fig. 5-14: Valves

The bistable magnetic valves (V1,V2, V3, V4, V5, V6, V7, V8, V10 at COMPACT 1 and V2, V3, V4, V5, V6, V7, V8, V10, V11, V12 at COMPACT 2
and 3) are maintenance-free. They must be replaced by malfunction.

Tubing system

The tube system is pre-assembled and part of the PM-kit (please refer to Operator's Manual, chapter 12).
The tubes are to be mounted into their given position; the connecting tube to the flap (see Fig. 5-5, Fig. 5-6 and Fig. 5-7, **1**) will be inserted through the boring (see Fig. 5-9, Fig. 5-10 and Fig. 5-11, **4**) and pushed over the nipple of the wash disc. The wash nozzle (see Fig. 5-9, Fig. 5-10 and Fig. 5-11, **3**) mixes air with the wash water allowing better cleaning results.

Tubing diagram see chapter 3 "General description".

The main tubing is located in the bottle compartment. Unscrew the fixing ledge to remove tubing. The tubes can then easily be changed from the front. Parts of the pre-assembled tubing from the PM-Kit are to be used. The connections from the gas valve, KCl- and vacuum pump are inserted through the housing boring and are then connected into the interior of the analyzer.

Hall sensor
(AVL COMPACT 1 >SN 1000 and AVL COMPACT 2 and 3)

The hall sensor board is fixed to the fill port module by a screw and is directly connected to **J25** on the C2-Connector Board.
The hall sensor detects the position of the flap.

Flap switch
(AVL COMPACT 1 <SN 1000)

The flap switch is directly connected to **J21** on the COBA Control Board 9410L01. The flap switch detects the position of the flap.

Flap

The flap is held open with a spring and in the closed position with a permanent magnet (see Fig. 5-9, Fig. 5-10 and Fig. 5-11, **5**).
The fill port is accessible after opening the flap. The shock absorbing wash disc is responsible for the supply of operating reagents. To prevent leakage, sealing area and washing cone must be cleaned regularly.
The washers must be exchanged when the sealing area is damaged (see Fig. 5-9, Fig. 5-10 and Fig. 5-11, **6**).

Procedure

1. Remove cover at the front side of the flap.
2. loosen fixing screws and
3. remove washing disc and spring.
4. Assemble new washing disc. Check if these are freely movable.
5. Fasten fixing screw.

When the flap is closed, the washing disc must snuggly fit onto the fill port. The fixing screw must not have more than approx. 1 mm free space.

Bottle compartment

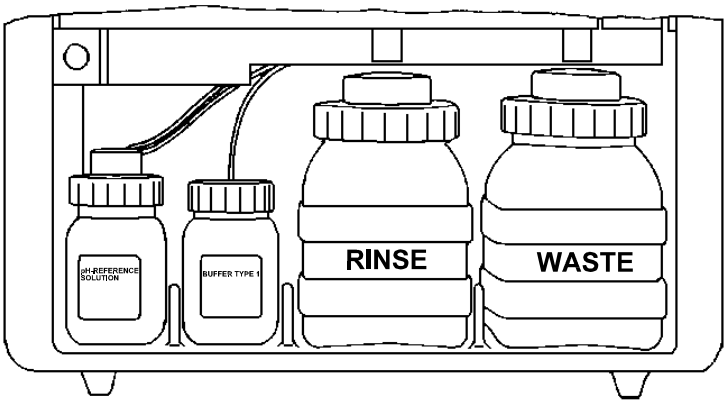

Fig. 5-15: Bottle compartment AVL COMPACT 1

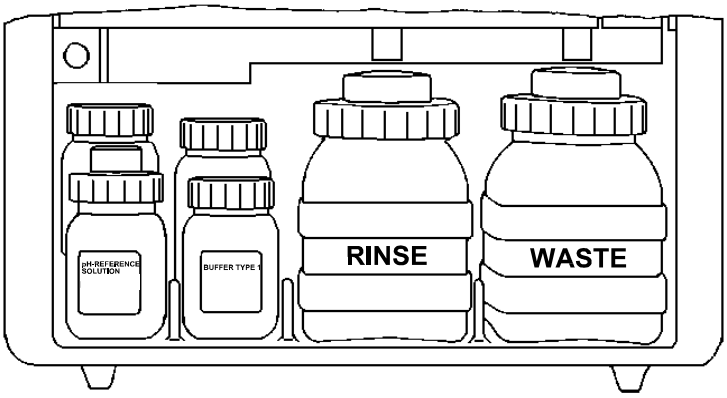

Fig. 5-16: Bottle compartment - AVL COMPACT 2 and 3

Gas humidifier
(AVL COMPACT 1 only)

The gas humidifier is located in the bottle compartment directly behind the Waste container. The gas humidifier is refilled after each wash cycle and ensures about 90% gas humidity.

For replacement, the humidifier can be removed out of the holder (forwards), after removing the 4 connection tubes.

Waste cap

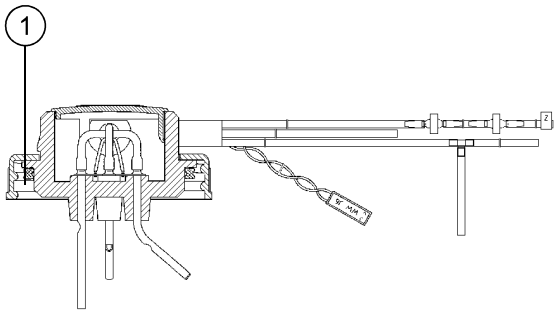

Fig. 5-17: Waste cap

The Waste cap must be properly screwed onto the Waste container. The connection J6 for waste water detection is led through the rear wall of the bottle compartment and plugged onto the C2-Connector Board.
At AVL COMPACT 1 this connection is directly connected to **J21** on the COBA Control Board.
If a „No pressure“ - alarm occurs, change the quad-ring (see Fig. 5-17, **1**) or check sealing of Waste container.

NOTE: *Please ensure that the Waste container is completely airtight to guarantee operation without any trouble.*

RINSE cap

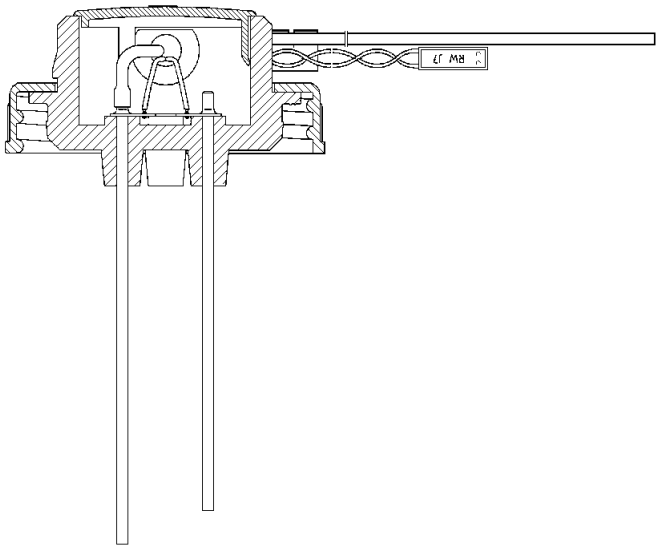

Fig. 5-18: RINSE cap

The connection J7 for wash water detection is led through the rear wall of the bottle compartment and plugged onto the C2-Connector Board (AVL COMPACT 1 >SN 1000 and AVL COMPACT 2 and 3 only).

Cap for Buffer 1, Buffer 2 and Cleaning solution

(Buffer 2, AVL COMPACT 2 and 3 only, Cleaning solution)
The caps for Buffer 1 and 2, as well as Cleaning solution have no fill level detection.

Cap for pH-Reference solution

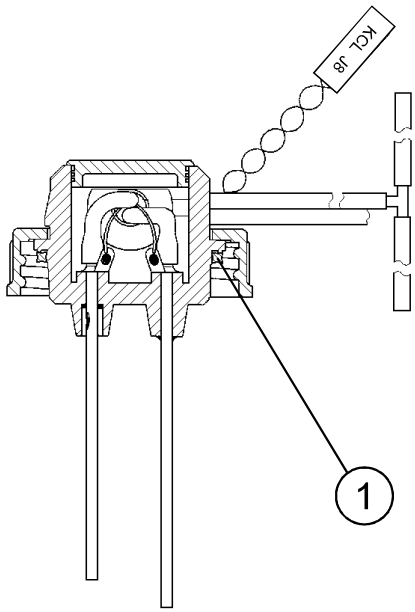

Fig. 5-19: Cap for pH-Reference solution

The cap for pH-Reference solution must be properly screwed onto the Reference Solution bottle. If sealing problems occur, check quad-ring (see Fig. 5-19, **1**) or sealing of Reference solution container.
The connection for the Reference solution detection J8 is led through the rear wall of the bottle compartment and plugged onto the C2-Connector Board (AVL COMPACT 1 >SN 1000, as well as AVL COMPACT 2 and 3).

Cover

The cover is secured with 2 screws, which also form the cover hinge. The extraction frame allows the fixing of the cover in half openend position. This allows better access to the keyboard, display, and measuring chamber area for maintenance and service procedures. After complete opening, the cover holder is released.
The cover can be removed after loosening one screw (see Fig. 5-1, **2**). This allows access to the display, printer etc.. After remounting, be sure that the grounding wire is located at the right outer side of the flat cable to avoid disturbance of the display.

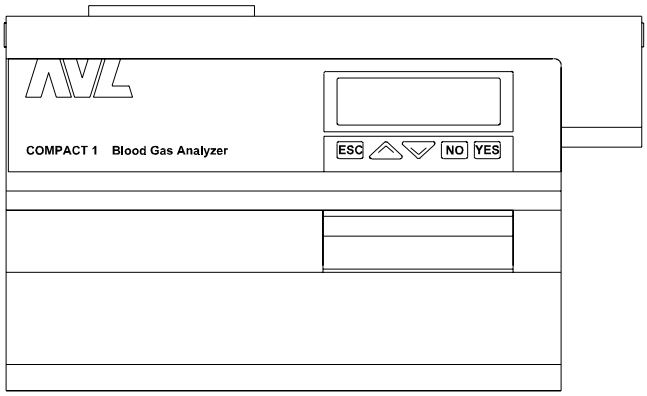

Fig. 5-20: Cover AVL COMPACT 1

AVL COMPACT 1 systems with serial number <1000 do not have a „**NO**“ - key.

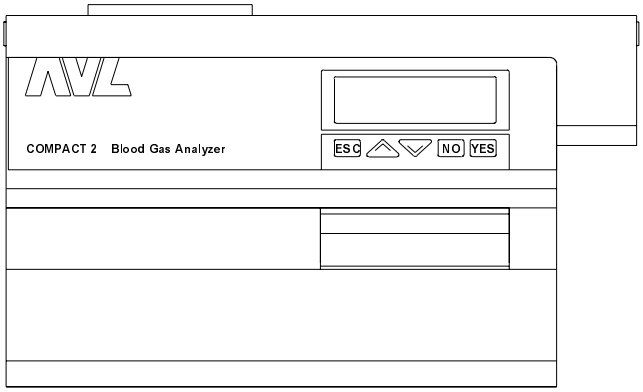

Fig. 5-21: Cover AVL COMPACT 2

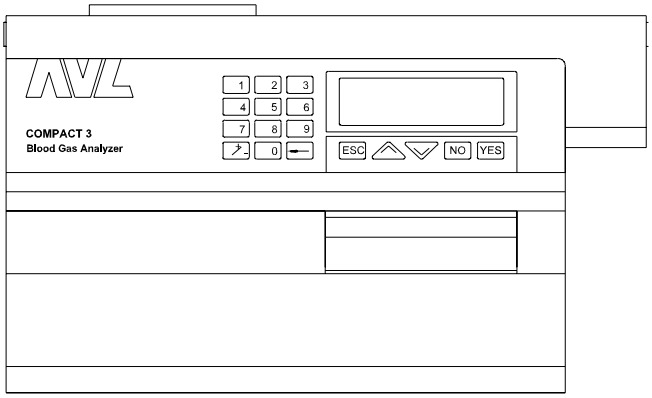

Fig. 5-22: Cover AVL COMPACT 3

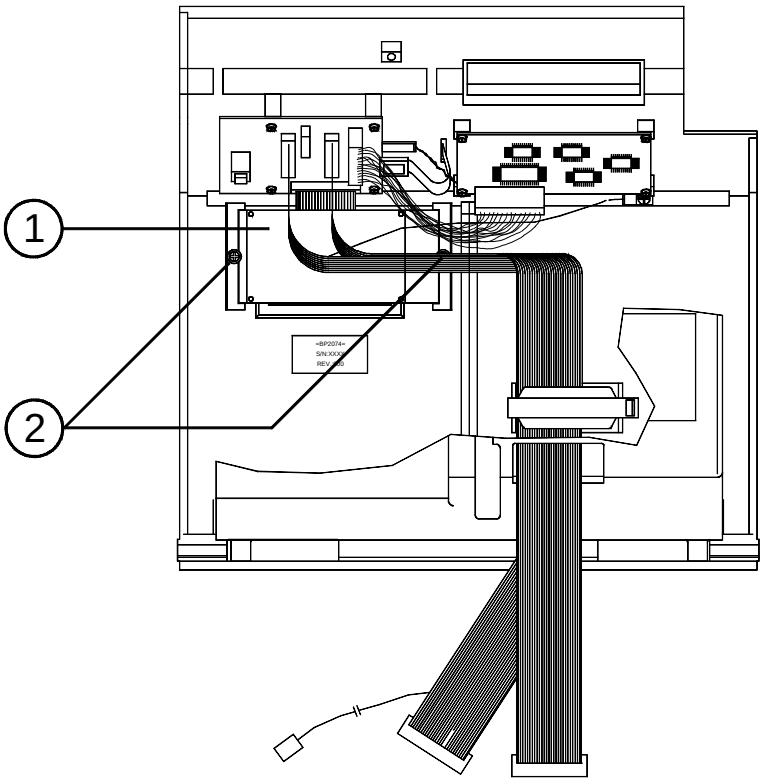

Fig. 5-23: Inside cover view / cover removed (AVL COMPACT 3)

Display

The four-lined LC-display is fastened by 4 screws and must be replaced, if defective. The contrast is set by 2 fixed resistors.

NOTE: *The instrument can have different display revision levels.*
Rev. 00 for instruments up to P/N 1151,
Rev. 01 for instruments from P/N 1151 onwards.
In case of replacement make your order by saying Rev.No. of display and P/N of your analyzer.
Replacements should be done by service technicians only.

Keyboard

The keyboard, is a membrane keyboard, which is mounted with adhesive foil and must be replaced, when defective. After removing the cover foil, the cover surface must be thouroughly cleaned and a new keyboard is to be adhered. (AVL COMPACT 3 has an extented, numeric keyboard).

NOTE: *For COMPACT 1 systems with serial numbers >1500, the keyboard at the ribbon cable end was changed.*
Therefore, the original parts and ident numbers are to be used as replacement parts for devices with serial numbers <1500.

Thermal printer

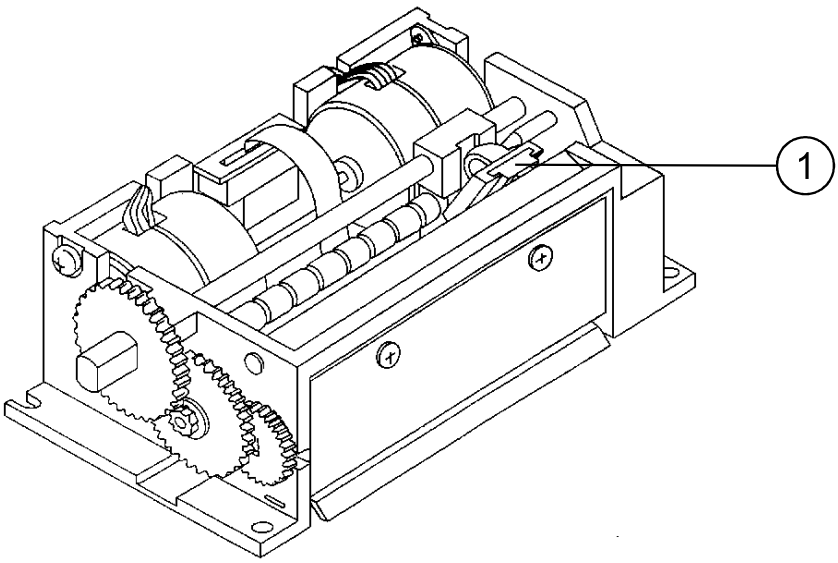

Fig. 5-24: Thermal printer

The thermal printer with mounting plate is held into place within the cover by 2 screws (see Fig. 5-23, **2**). Before removing, loosen the foil clamping ledge J5 to avoid damage of the foil cable. The thermal printer head (see Fig. 5-24, **1**) is accessible when the printer is dismounted.

Connector Board

For details please refer to chapter 6, "Electronics".

KCl pump

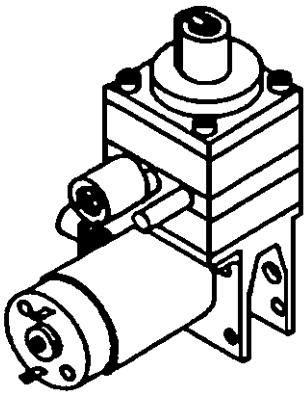

Fig. 5-25: KCl pump

To fill the pH-Reference electrode the KCl pump supplies a necessary pressure of 110 mbar. The pump is maintenance-free and has to be replaced when defective. Remove the cover and loosen the 3 fixing screws on the housing to remove the pump.

Setting the pressure

For details please refer to chapter 8, "Adjustments".

Vacuum pump

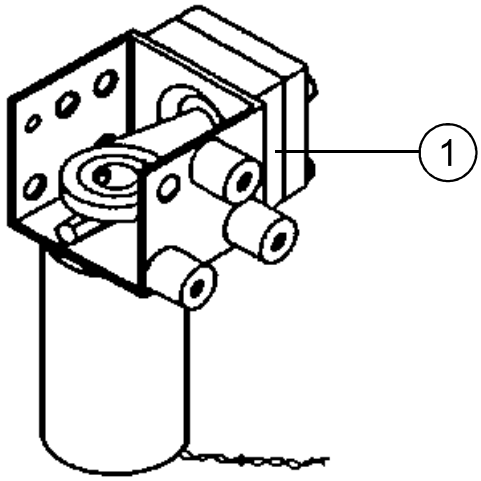

Fig. 5-26: Vacuum pump

The DC vacuum pump (24 V) generates a necessary underpressure of about 700 mbar to guarantee wash and try of measuring capillary. To ensure troublefree operation, it is advisable to renew the pump head (see Fig. 5-26, **1** - housing part and membrane) once a year.

Changing the vacuum pump

1. Remove cover of housing.
2. Open COBA Control Board.
3. Loosen the three Phillips screws, which hold the vacuum pump.
4. Dismount vacuum pump.

Assembly is done in reverse order.

NOTE: *Guide the pump output tube to the outside, through the base plate of the AVL COMPACT !*

Changing the vacuum pump head

1. Remove the rear wall off the AVL COMPACT.
2. Open COBA Control Board.
3. Pull off the tubes from the vacuum pump.
4. Open the four screws at the vacuum pump head.
5. Pull off the pump head.

Assembly is done in reverse order.

Peristaltic pump

The peristaltic pump is used to transport all samples and liquids inside the analyzer.

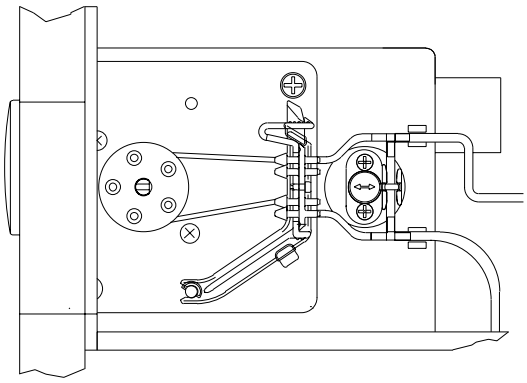

Fig. 5-27: Peristaltic pump

Gas valve 1

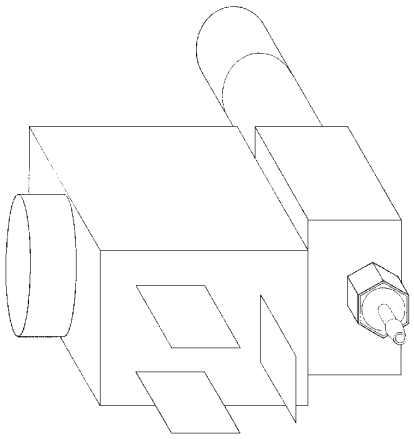

Fig. 5-28: 2/2-way gas valve

The gas valve GV1 (24 V) regulates the flow of calibration gas G1 (calibration gas approx. 3 bar = 43.5 psi or 300 kPa). The maximal flow is limited at about 5 ml/min by the built-in nozzle. The repair set includes the built in valve membrane and entrance filter.

Gas valve 2
(AVL COMPACT 2 and 3 only)

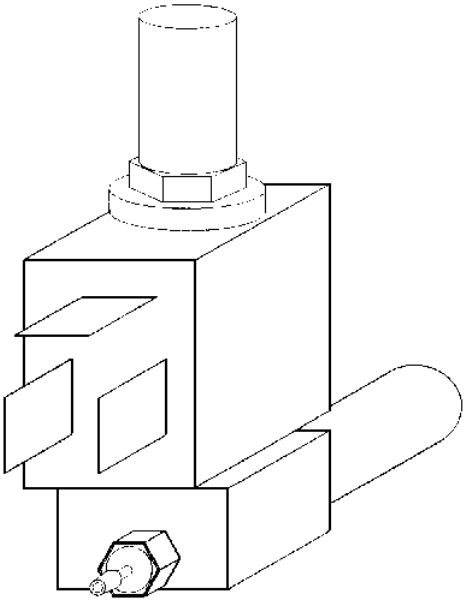

Fig. 5-29: 3/2-way gas valve

The gas valve has 2 apertures:

- Aperture 1 is active during gas 2 calibration and limits the gas flow to approx. 5ml/min.
- Aperture 2 limits the gas flow to 1ml/min and provides a steady rinsing of the gas 2 supply between calibration intervals.

6 ELECTRONICS

Block circuit diagram - electronics **6-1**

Power socket **6-4**

Power supply **6-4**

User interface **6-5**
LCD display 6-5
Thermal printer 6-5
Keyboard 6-5

Connector Board 9420C02 (AVL COMPACT 1 and 2) **6-5**

Connector Board 9430C01 (AVL COMPACT 3) **6-5**

Control circuit periphery **6-6**

Measuring chamber module **6-6**

Filling level detection **6-6**

C2-Connector Board 9420C01 (AVL COMPACT 1 SN >1000, AVL COMPACT 2 and 3) **6-7**

Wiring diagram **6-8**

COBA Control Board 9430L01 ..... **6-10**
Power - circuit diagram sheet 1 6-11
Supply for the digital circuit 6-11
Supply for aggregates and heating 6-11
Supply for the analog circuit 6-11
Reference voltage source 6-11
User interface - circuit diagram sheet 2 6-12
Keyboard input 6-12
Flap detection 6-12
Display control 6-12
Thermal printer control 6-12
Valve control - circuit diagram sheet 3 6-13
Bistable magnetic valves 6-13
Gas valves 6-13
Pump control - circuit diagram sheet 4 6-13
DC pumps (KCl pump, vacuum pump) 6-13
Peristaltic pump 6-13
Signal shield 6-13
Preamplifier - circuit diagram sheet 5 6-14
CO_2-amplifier (Gain=10) 6-14
pH-amplifier (Gain=20) 6-14
O_2-amplifier (100 mV / 1 nA) 6-14
Measuring chamber and sample inlet path - circuit diagram sheet 6 6-15
Heat control 6-15
Temperature control 6-15

Barometer - circuit diagram sheet 6 6-16
Analog sensor detection diagram sheet 6 6-16
Analog multiplexer diagram sheet 7 6-16
Analog filter - circuit diagram sheet 7 6-16
Analog/digital converter - circuit diagram sheet 7 6-17
Shift register circuit - circuit diagram sheet 7 6-17
Contact path- and filling level detection - circuit diagram sheet 7 6-17
Micro controller - circuit diagram sheet 8 6-18
Intel micro controller 6-18
Reset circuit - circuit diagram sheet 9 6-18
Real time clock - circuit diagram sheet 9 6-18
Interface option - circuit diagram sheet 9 6-19
Interface driver - circuit diagram sheet 9 6-19

Interface Board 9410L02 (AVL COMPACT 2 SN <1500 and AVL COMPACT 3) 6-19

Interfaces 6-20
COM1 6-20
COM1 6-20
COM2 6-20
COM2 6-21
COM3 6-21
COM3 6-22
Interface 6-23

Telelink 6-24
Technical specifications 6-24
Product description 6-25
Telelink commands 6-25

Barcode scanner 6-26
Specifications 6-26
Installation 6-27
Types of barcodes 6-28
Password 6-29

Datalink (AVL COMPACT 2 up to SN 1500 and AVL COMPACT 3 only) 6-30
Datalink from AVL COMPACT to AVL 988-3 6-30
Description of the interface AVL 988-3 6-30
Installation 6-32
AVL COMPACT to AVL 9180 6-36
Description of the Interface (AVL 9180) 6-36
Pinning 6-36
Installation 6-38
Activate the datalink function at AVL COMPACT as follows: 6-38
Activating the datalink on the AVL 9180 6-40
Datalink from AVL COMPACT to AVL 912 6-43
Description of the interface AVL 912 6-43
Installation 6-45

6 Electronics

Block circuit diagram - electronics

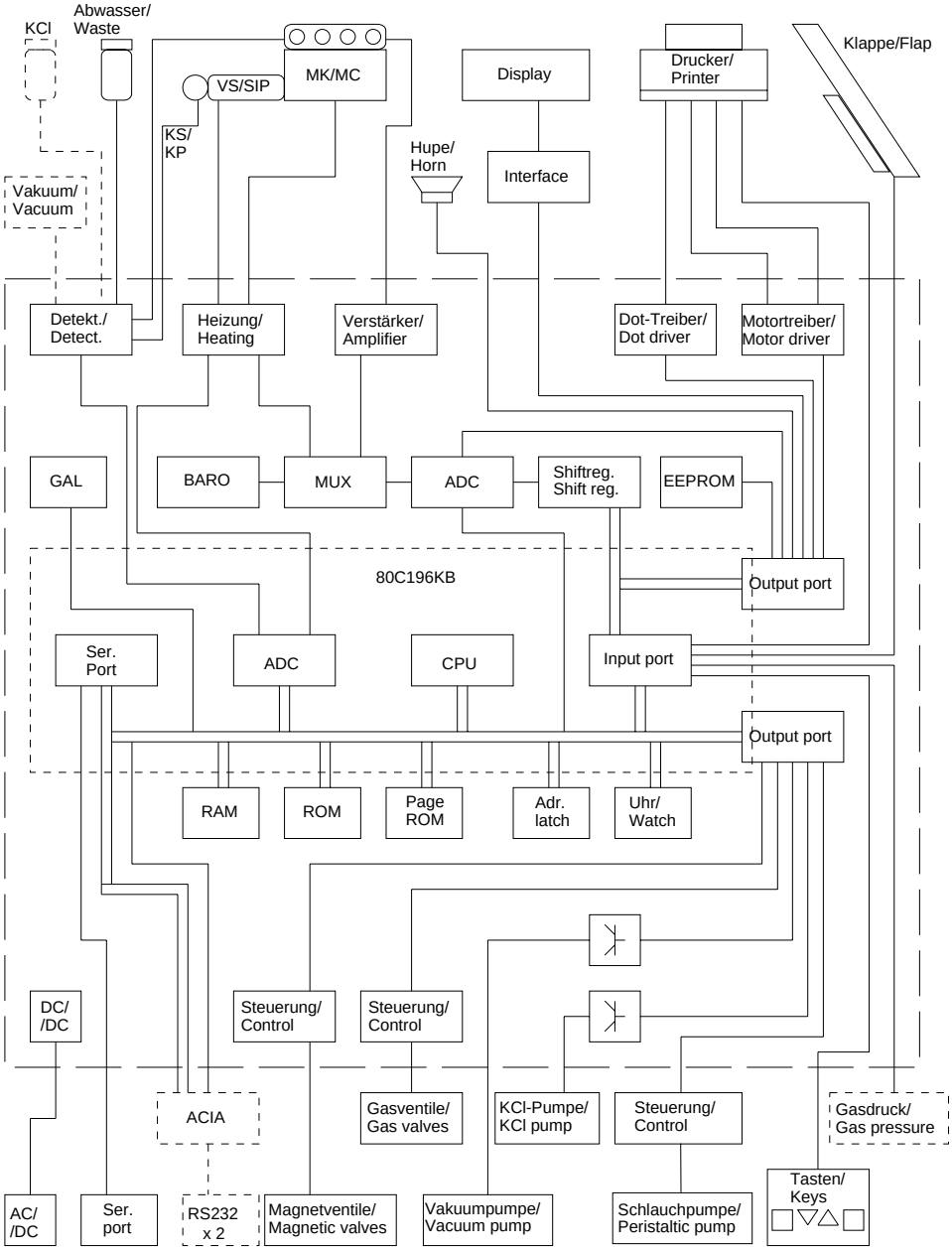

Fig. 6-1: Block circuit diagram - electronic (AVL COMPACT 1, version 1 / SN <1000)

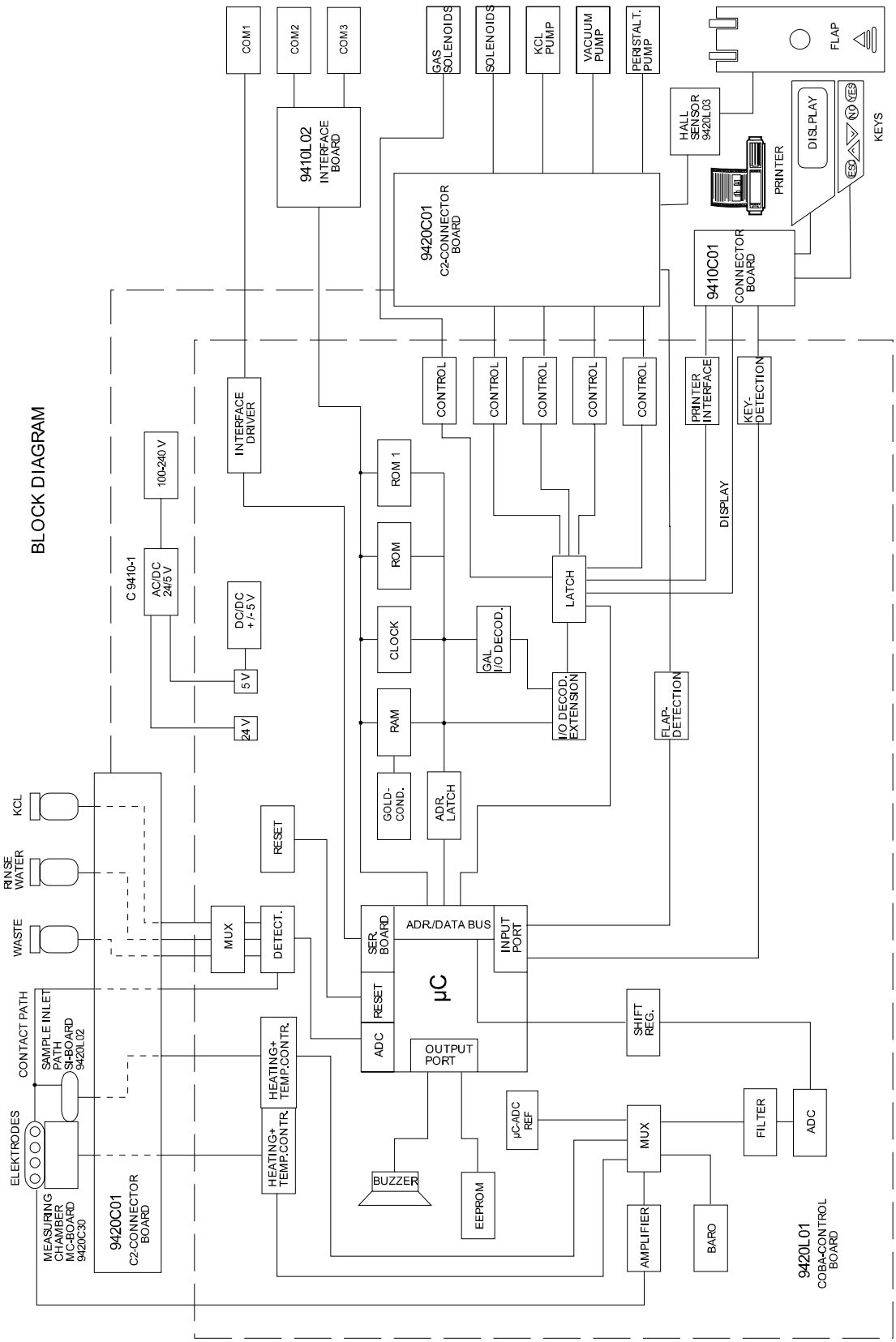

Fig. 6-2: Block circuit diagram - electronic
(AVL COMPACT 1, version 2 / from SN 1000 to 1500) and
(AVL COMPACT 2, version 1 / SN <1500)

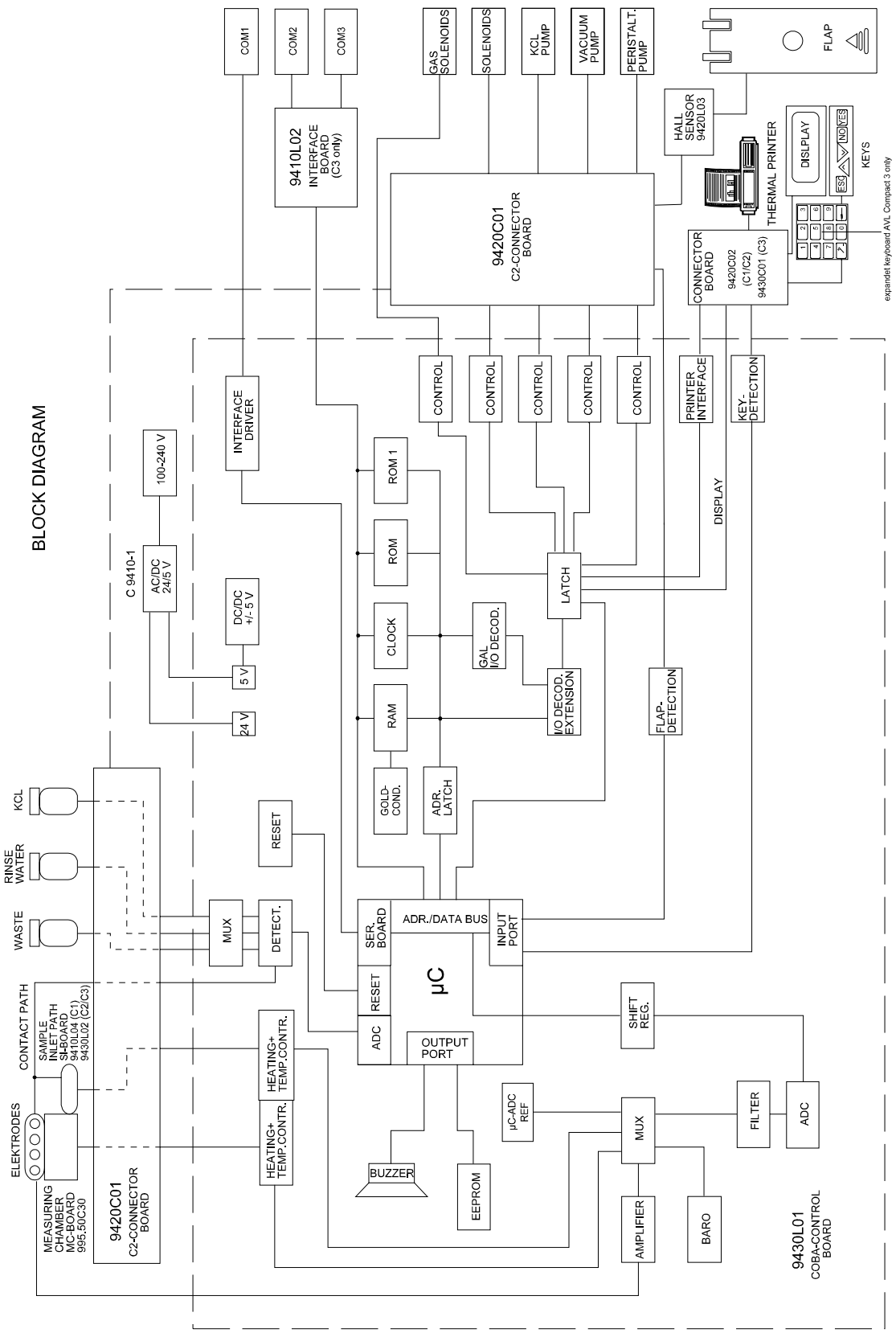

Fig. 6-3: Block circuit diagram - electronic
(AVL COMPACT 1, 2, version 3 /
SN > 1500 and AVL COMPACT 3)

Power socket

The combination coupler plug on the rear of the analyzer contains an insert for both primary fuses, a two pole coupler switch and a coupler plug.

Primary fuses: 1.6 A lag

Power supply

The primary type switched mode power supply is built up according to the standards EN 60 950 and VDE 0750 part 1 for analyzer type B. The dielectric strength complies with the standards VDE 0160, class 1 and the EMC emission electromagnetic compatibility VDE 0871, part 1, limits class B. The specifications for EMC immission will be met with VDE 0843, part 4, class 2 (IEC 801, part 4).

Maximum power supply voltage: **85 to 264 VAC** , 47 to 63 Hz.

Outputs: **+24 V** (+/- 10%, 1.5 A) and + **5.1 V** (+/- 2%, 1.0 A)
< 200 resp. 50 mVss are available.

The output voltages are protected against short circuits and idle-state. The power supply can be operated at temperatures of 0 to 55 °C.

X2	Power supply input (AC) Connection from the coupler plug
X2/2,X2/4	Power supply voltage
X1	DC voltages Connection to J16, COBA Control Board
X1/1, X1/2	+ 24 VDC
X1/3	+ 5.1 VDC
X1/4 to X1/7	GND
min. load	+ 5 V / 0.4 A + 24 V / 0.15 A

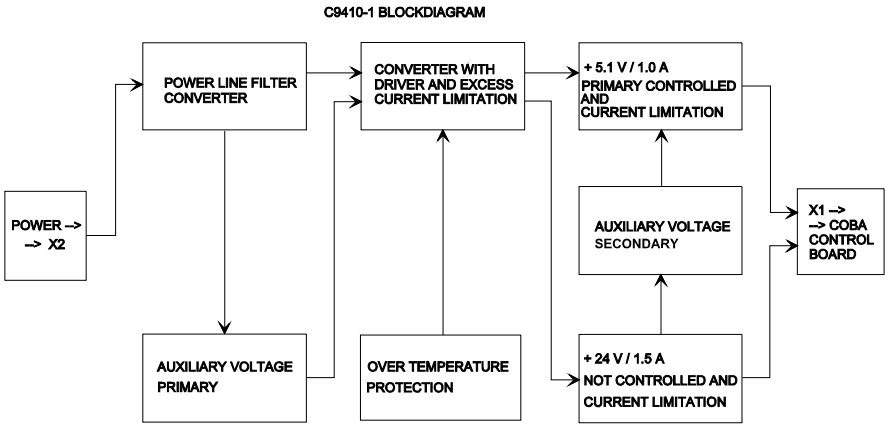

Fig. 6-4: Block diagram - power supply

User interface

The user interface consists of a LCD display, a thermal printer and a membrane keyboard.

LCD display

The display module consists of a board with microcontrollor, memory and display with LED-background lighting. The display has 4 lines with 20 characters each with a 5x7 dot matrix.

Thermal printer

The printer consists of the printing element, a thermal head with the 1 x 8 dot matrix and a switch for zero position detection (HOME), as well as 2 stepper motors for the line feed and the positioning of the thermal head.

Keyboard

The keyboard consists of 5 keys (**ESC, UP, DOWN, NO, YES**) with tactile type (AVL COMPACT 1 systems with serial numbers <1000 do not have a "**NO**" - key). AVL COMPACT 3 systems have an expandet, numeric keyboard.

Connector Board 9420C02 (AVL COMPACT 1 and 2)
Connector Board 9430C01 (AVL COMPACT 3)

The board located at the inside of the cover of the analyzer, enables connection of the user interface to the COBA Control Board 9420L01. The push button for the paper feed of the thermoprinter is located there in addition.

J1	Printer	Connection from plug J2, COBA Control Board, Circuit diagram sheet 2
J2	Display, Keyboard	Connection from plug J3, COBA Control Board, Circuit diagram sheet 2
J3	Display	Connection to LCD-display
J4	LED backlighting	Connection to LCD-display
J5	Printer	Connection to thermoprinter
J6	Keyboard	Connection to membrane keyboard

Control circuit periphery

The control circuit periphery includes the following aggregates:

9 bistable magnetic valves (AVL COMPACT 1)

10 bistable magnetic valves (AVL COMPACT 2 and 3)

1 measuring chamber valve (bistable)

1 monostable magnetic valves (AVL COMPACT 1)

2 magnetic valves monostable (Gas) (AVL COMPACT 2 and 3)

1 KCl pump (DC motor for KCl)

1 vacuum pump (DC motor)

1 peristaltic pump (Stepper motor)

Measuring chamber module

The measuring chamber module consists of :

1 Measuring chamber including MC-Board (SN see chapter 2) with heating (transistors),
temperature control (NTC), 2 detectors for contact path detection and measuring chamber lighting.

1 input path including SI-Board (SN see chapter 2) with heating (transistor), temperature control (NTC) and one connection for contact path detection.

1 Hall sensor board 9420L03 for flap detection, containing one hall sensor, one transistor and two resistors for level variation for AVL COMPACT 1 SN >1000 and AVL COMPACT 2 and 3.

1 Flap switch for flap detection (AVL COMPACT 1 SN <1000).

Filling level detection

The detection of filling levels of pH-Reference solution, RINSE (AVL COMPACT 1 SN >1000 and AVL COMPACT 2 and 3) and Waste (AVL COMPACT 1, 2 and 3) are directly checked by detectors in the bottles.

The filling levels from Buffer 1, Buffer 2 and Cleaning solution are indirectly checked by contact path detection during aspiration.

C2-Connector Board 9420C01

(AVL COMPACT 1 SN >1000, AVL COMPACT 2 and 3)

The board built-in at the bulkhead serves as connection board for control periphery, measuring sensors and filling level sensors with the COBA Control Board 9420L01, 9430L01.

J1	Connection from plug J8, COBA Control Board, Circuit diagram sheet 2, 3, 4	
J2	Connection from plug J7, COBA Control Board, Circuit diagram sheet 6, 7	
J3	SENS-HUM	Analog input (jumper J25 µC CH15)
J4	SENS-ANA	Analog input (jumper J25 µC CH15)
J5	SENS-GAS	Pressure sensor input (µC CH14)
J6	Connection to waste water bottle	
J7	Connection to rinse water bottle	
J8	Connection to KCl-bottle	
J9	Plug for bistable valve (reserve)	
J10	Connection to bistable valve V10	
J11	Connection to bistable valve V8	
J12	Connection to bistable valve V6	
J13	Connection to KCl-pump	
J14	Connection to Vacuum-pump	
J15	Connection to peristaltic pump (reserve)	
J16	Connection to peristaltic pump	
J17	Connection to bistable valve V2	
J18	Connection to bistable valve V7	
J19	Connection to bistable valve V11 (reserve at C1)	
J20	Connection to bistable valve V12 (reserve at C1)	
J21	Connection to bistable valve V3	
J22	Connection to bistable valve V4	
J23	Connection to bistable valve V5	
J24	Connection to bistable valve V9	
J25	Connection to Hall sensor board 9420L03	
J26	Connection to the input path (SI-Board 9420L02/AVL COMPACT 1 or SI-BOARD 9430L02/AVL COMPACT 2 and 3)	
J27	Connection for flap contact (membrane key), not used !	
J28	Connection to the measuring chamber (MC-Board 995.50C30)	

Wiring diagram

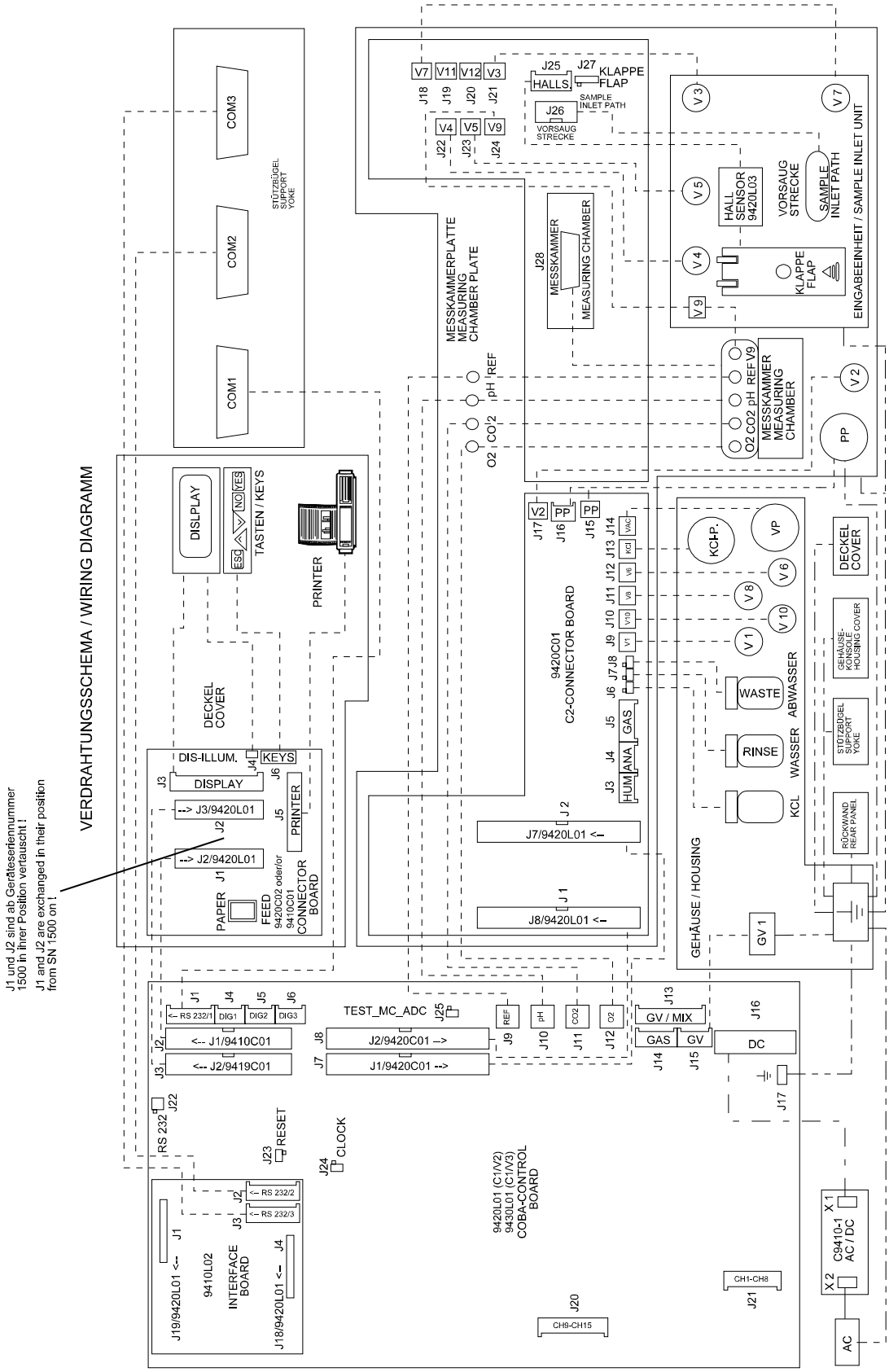

Fig. 6-5: Wiring diagram (AVL COMPACT 1 SN >1000)

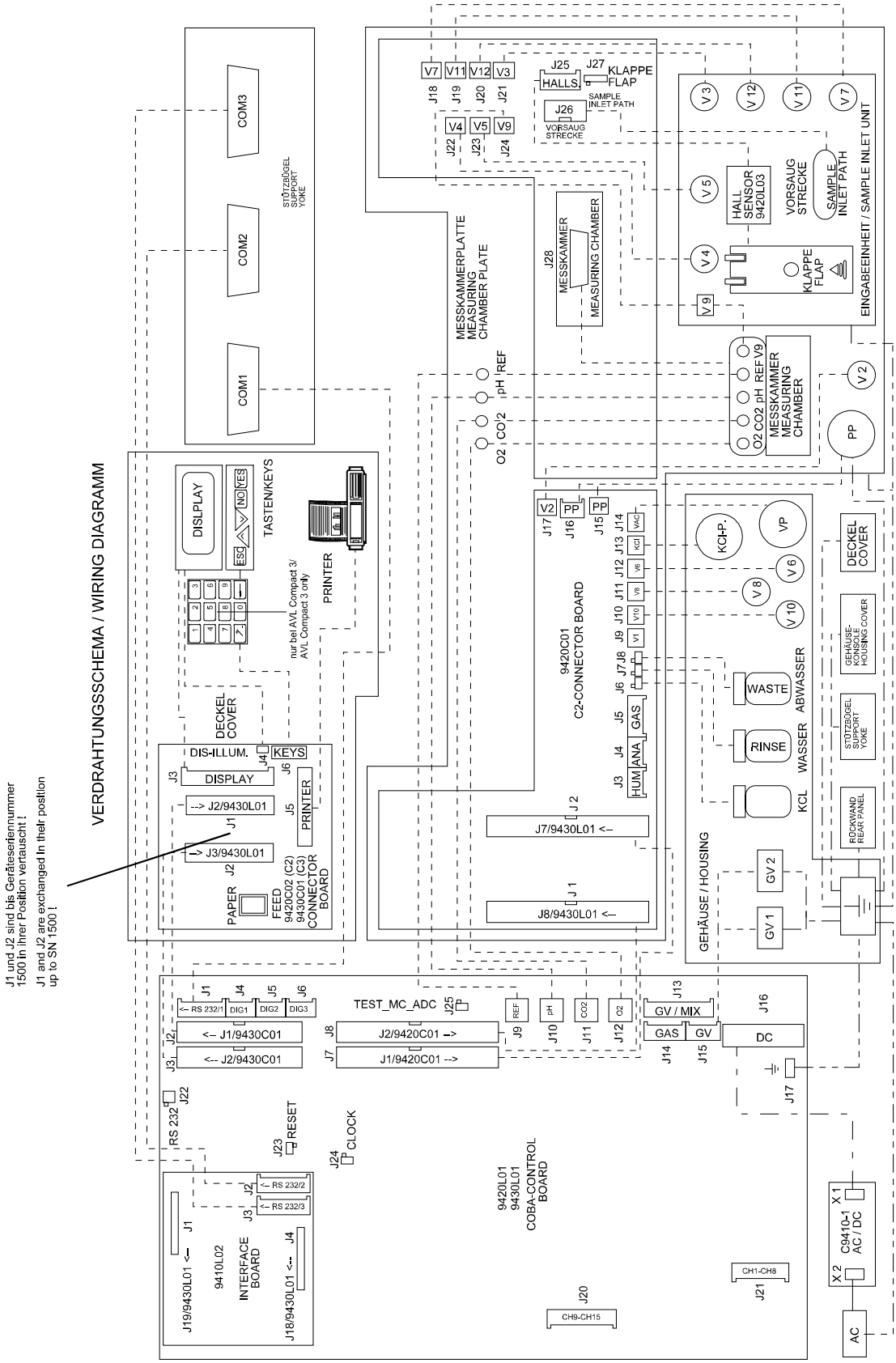

Fig. 6-6: Wiring diagram (AVL COMPACT 2 and 3)

COBA Control Board 9430L01

NOTE: *The following description applies to the COBA Control Board 9430L01. In older versions (9410L01, 9120L01), deviations in component numbering and functions are possible.*

The COBA Control Board consists of the following modules:

Power	Circuit diagram sheet 1
User interface	Circuit diagram sheet 2
Valve control	Circuit diagram sheet 3
Pump control	Circuit diagram sheet 4
Amplifier	Circuit diagram sheet 5

ANALOG PART 1 — Circuit diagram sheet 6

Heating and temperature control

Barometer

Analog sensor detection

ANALOG PART 2 — Circuit diagram sheet 7

Analog multiplexer

Analog filter

Analog/digital converter

Shift register circuit

Path and filling level detection

DIGITAL PART 1 — Circuit diagram sheet 8

Micro controllor

µC-periphery

DIGITAL PART 2 — Circuit diagram sheet 9

Reset circuit

Real time clock

Interface option

Interface driver

DIGITAL PART 3 — Circuit diagram sheet 10

Digital control

Power - circuit diagram sheet 1

DC-supply voltages can be checked by the LED´s D40, D41, D42 and D43 (visible also through holes in the backplane).

D40	+ 5 V Analog	Control-LED
D41	- 5 V Analog	Control-LED
D42	+ 24 V Power	Control-LED
D43	+ 5 V Digital	Control-LED
J17	Ground terminal	Grounding/GND/P_GND/A_GND

Supply for the digital circuit

The + 5 V from the power supply are protected by **F4, 3.2 A lag** (thermal printer) and **F5, 1.6 A**. The diode D6 at the tie lugs ST1 and ST2 provides spike protection.

V5	+ 5 V Digital	Test point **TP6**
GND	Digital-GND	Test point **TP7**

Supply for aggregates and heating

The + 24 V from the power supply are **F3, 1.6 A lag**.

V24	+ 24 Power	Test point **TP12**
P_GND	Power-GND	Test point **TP11**

Supply for the analog circuit

From the + 5 V Digital, the positive and negative analog voltage is generated by the DC/DC-converter I52, coils L1, L2, L3 and the filter capacitors. They are protected by with **F1** (+ 5 V) and **F2** (-5 V), **80** mA. The resistors R129 and R130 with the LED´s D40 and D41 provide the voltage setting of the load dependent DC/DC-converter.

V5NEG	- 5 V Analog	Test point **TP9**
V5POS	+ 5 V Analog	Test point **TP10**
AGND	Analog-GND	Test point **TP8**

Reference voltage source

The reference voltage **+UREF (+ 2500 mV)** for the analog module is generated by the reference diode D4 (LT1009CZ) and can be set by the **potentiometer P1.**

UREF	Reference voltage	Test point **TP5**

User interface - circuit diagram sheet 2

Keyboard input

The keyboard signals together with printer signals for home position and paper feed are connected via buffer I61 to the microcontroller (P1_BUS) and I2. The retriggerable oneshot I33 generates the interrupt signal IRQ_KEYS (IRQ2) when a key is pressed. The additionally realized NO key produces UP- and DOWN- signals simultaneously.

Flap detection

This detection input signal comes from a hall sensor. The voltage level variation on I51/3 (Schmitt-Trigger Inverter) when flap is closed is approx. 4.5 V. Opening the flap causes a delay from approx. 250 ms by R161 and C70 and a rising edge at I51/4. Closing of the flap causes a falling edge at I51/4 after a delay of approx. 30 ms by R160 and C70. The signal FLAP acts as an interrupt source.

Display control

The intelligent display module is controlled parallel with the data -and control lines. The LED-backlighting can be switched with the signal DIS_ILLUM by the transistor T9.

Thermal printer control

The printer data (low-active) are connected with the dot driver I64 and I65 and plug J2. To protect the thermal head against overheating, the enable-inputs (I64/14, I65/14) of the dot driver are used. The retriggerable oneshot I33 generates the enable signal by connection of PRI_M1 and PRI_CLOCK.

Valve control - circuit diagram sheet 3

Bistable magnetic valves

The double-power operation amplifiers L272M are used to control the bistable magnetic valves. The voltage at the positive inputs of the driver is 2.5 V. The control signal is directly connected to the negative input of the operation amplifier. The other OP-AMP with R = 120 kOhm and C = 680 nF causes a delay which leads to a switching time of approx. 60 ms.

Gas valves

The gas valve are switched by the power driver ULN2003, I50. I51 is used for level inversion (low-active).

Pump control - circuit diagram sheet 4

DC pumps (KCl pump, vacuum pump)

The DC pumps are also switched by the power driver I50. For noise reduction of the KCl pump, the pre-resistor R222 is used.

Peristaltic pump

The control module I48 (L297) and the power driver I62 (L293E) are used for the peristaltic pump stepper motor.

Signal shield

Some lines in the flat cables (Connection C2-Connector Board and COBA Control Board) are connected to ground to allow the mutual shielding of the control and detection signals for pumps, valves, heating, contact paths, filling levels, and analog sensors.

Preamplifier - circuit diagram sheet 5

CO_2-amplifier (Gain=10)

The CO_2-amplifier circuit has a high impedance (typical 40 fA) input with clamping diodes PAD100, D36 and D38 at the CO_2-shield for conductance of the bias current. The input signals are amplified by the factor 10, by the differential amplifier I68 and the resistor R194/R193 resp. R204/R195. The offset voltage of the amplifier is not compensated because the maximum tolerance is only + / - 70 mV. The output signal CO_2_MUX is connected to channel 2 of the multiplexer.

pH-amplifier (Gain=20)

The pH-amplifier circuit has a high impedance (typical 40 fA) input. The input signals are amplified by the factor 20 by the differential amplifier I68 and the resistors R190/R189, R203 resp. R202/R191, R192. The offset voltage of the amplifier is not compensated, the maximum tolerance is only + / - 140 mV. The signal REF_CONT is disconnected from the reference electrode to the contact path detection by C106. The output signal pH_MUX is connected to channel 3 of the multiplexer.

O_2-amplifier (100 mV / 1 nA)

The O_2-amplifier circuit is an AVL patented bridge circuit for compensating membrane leaks. Clamping diodes PAD100, D37 and D39 at the O_2-shield for conductance of the bias current are provided. The input signal is amplified by the factor 10 (R132/R134) after the current-/voltage converter (1 nA = 100 mV). This means a signal transfer ratio of 100 mV per Nanoampere. The polarization voltage equals minus 700 mV, the maximum tolerance + / - 10 mV. The offset voltage of the amplifier is not compensated, the maximum tolerance is + /- 30 mV. The output signal O_2_MUX is connected to channel 1 of the analog multiplexer.

Measuring chamber and sample inlet path - circuit diagram sheet 6

Heat control

(Differences between the various versions can be seen in the block diagrams in chapter 10).
The NTC's, built in the measuring chamber and input path, are connected to the positive input of the bridge amplifier I55 forming the actual values (Measuring chamber and Input path) . The main value is defined (Measuring chamber temperature = 37.1 °C, sample inlet path temperature 37.1 °C) at the negative input. The heating current will be controlled by the transistors T4 (Measuring chamber) and T7 (Input path) according to the actual- reference-comparison. The starting power is dependent on the values of the resistors R73, R109, R111 (measuring chamber) and R147, R149, R154 (Input path), by the transistors T5 (Measuring chamber) and T6 (input path) and equals approx. 1.1 A at the Measuring chamber and approx. 300 mA at the Input path.

Temperature control

The impedance converters and inverting amplifiers I42 (measuring chamber) and I43 (input path) are used for temperature control. The NTC's of the controllers are connected to the negative input of the operational amplifier and the reference voltages are connected to the positive input.

The following applies to AVL COMPACT 1 and 2 systems SN <1500:
The outputs of the OP-amps are connected to channel 5 of the multiplexer (Measuring chamber) or channel 6 (input path). The scale factor is 100 mV per °C.
The output signals for measuring chamber and sample inlet path at 37 °C (98.6 °F) are approx. 0.0 V.

The following applies to AVL COMPACT 1 and 2 systems SN >1500 and AVL COMPACT 3:
The indroduction of NTCs eliminates parameter identification.
The output signal is connected to channel 5 or 6 of the multiplexer.
At 37.0 °C the output value is approx. 0.0 V at a scale factor of 100 mV/ °C.

Barometer - circuit diagram sheet 6

The barometer circuit consists of the absolute sensor pressure measuring I23 (resistor bridge) and the differential amplifier I30. In addition, a positive and a negative reference voltage (I30) is needed. The output signal BARO is connected to channel 4 of the multiplexer.

At the first instrumentation set up the characteristic value MWH of the barometer is measured by the µC and confirmed by the technician. The value S is a sensor specific value and is written down at the baro label at the COBA Control Board. During the instruments set up the pH value (this is an external measured precision reference barometer value) is entered via service routines.

The characteristic values S, PH (input value) and MWH (ADC-value) are stored in EEPROM when the analyzer is put into operation and must be resaved, when a board and/or a component replacement is made.

Analog sensor detection diagram sheet 6

There are additionally 3 analog sensor connections provided at the C2-Connector Board, which are actually not used. One sensor (pressure sensor) can optionally be connected on the COBA Control Board.

The operational amplifier I44 is intended for connection to a pressure sensor. The signal SENSE_GAS is connected with the µC-ADC channel 14.

Analog multiplexer diagram sheet 7

The selection of the analog signals to be measured are performed by the 8-channel multiplexer 4051 (I22). The multiplexer is supplied with + / - 5 V analog, to allow switching of the analog signals. The channel switching results from three control lines (MUX_0, MUX_1, MUX_2). The output of MUX I22/3 is connected to the resistor R31 of the filter.

Analog filter - circuit diagram sheet 7

In order to avoid measurement problems (external switching peaks from inductive loads, power noise) an active low-pass filter (simplified Bessel-filter third order) with a limit frequency of 30 Hz is used. Therefore, a time-constant-rise of the signal of about 60 ms results, when level variation occurs. In order to make use of the accuracy of the ADC, the measurement of the analog signal starts 120 milliseconds after a multiplexer channel change. The output of the filter I16/6 are connected to the analog/digital converter - input (I5/9).

Analog/digital converter - circuit diagram sheet 7

The 16-bit Sigma-Delta-Converter AD7701, I5 is used for the digitalization of the analog signal. The analog data (input I5/9) is filtered and converted. After completed conversion, the ADC produces in dependence on the signal *CS_ADC (AND-linking) an interrupt *DRDY and transfers the digital data (SDATA I5/20), controlled by the clock (SCLK I5/19), to the shift register circuit I13. The ADC can be automatically calibrated by the input CAL (I5/13). The operational mode of the ADC is set by the inputs I5/10 (+UREF = 2.5 V) and I5/12 (BP/UP* = +5 V). The operational mode in this case is a bipolar operation between plus and minus 2.5 V. This results in a resolution of 76 µV = 5 V / 65536
(16-bit) for one LSB. The absolute ADC-accuracy equals plus/minus 1 LSB.

Shift register circuit - circuit diagram sheet 7

The shift register circuits I13 and I20 are used for taking-over the serial 16-bitstream ADC data (SDATA). The transfer is controlled by the clock line of the ADC (I5). The first 8 bit of the serial data are taken over from I13 (Pin 11) and transferred to I20/11. The last 8 bits remain in the shift register circuit I13. During the read cycle of the µC the data are transferred parallel from I13 and I20 to the 16-bit databus.

Contact path- and filling level detection - circuit diagram sheet 7

For these detections, a square wave signal (CON_CLOCK) with about 400 Hz from µC is led to a R/C divider network in which the impedance to be measured is included. The output current of the divider network changes depending on the impedance. The DC signals CONT_1 (CH9), CONT_REF (CH10) are generated by a peak detector and are connected to the µC-ADC. Contact path and filling level detection is switched by the control signal CONT_FILL. The filling level detection FILL_W_R_K (Waste CH11, RINSE CH12, KCl CH13) is done without peak detection (mean values made by software). The multiplexer 4052 (I49) is used for the filling level detection and for switching from waste water, RINSE and Ref. detection by the control signals MUX1_0 and MUX1_1.

The characteristic values for blood contact (CONT_1) approx. 2.8 V, Reference contact (CONT_REF approx. 2.8 V, Waste approx. 0.8 V, RINSE approx. 3.5 V and KCl approx. 0.8 V) are saved in EEPROM as factory setting and must be resaved when board and/or component replacements are made.

In AVL COMPACT 2 systems SN >1500 and AVL COMPACT 3 systems, contact KI is switched either to K0 (sample inlet path) or KI via a semiconductor switch on the SI-Board. The appertaining control line comes from the micro controller.

Micro controller - circuit diagram sheet 8

Intel micro controller

The Intel micro controller 80C196KB is a 16-bit CMOS controller chip with 68 pins, integrated 256-Byte RAM and 48 I/O-lines.

The µC 80C196KB contains two function groups
the micro processor part and the periphery.

The micro processor consists of:

- **CPU**
- **Memory controller**
- **Interrupt controller**

The Periphery consists of:

- **PWM - pulse width modulation**
- **Timer**
- **HSI - high speed inputs**
- **HSO - high speed outputs**
- **Serial interface**
- **Analog/digital - converter**
- **I/O ports**
- **Watchdog timer**

Reset circuit - circuit diagram sheet 9

The reset circuit consists of three parts. Part 1 includes the reset component TL7702 (I31) and the transistor T1, which generates the reset signal for the real time clock (I26/15). The transistor T2 (Part 2) acts as a separation so that the micro controller can also activate a reset. T2 generates the *CPURESET signal which is connected to the µC (I4/16) and controls the down counter I24 (Part 3). I24 is set free when the micro controller is functioning properly (Signal CLK from µC) and produces the signal RESET and after the Inverter I17 *RESET. RESET is partially connected with the latch component and *RESET with the periphery. A hardware reset can be activated manually with the jumper J23.
*RES is connected to latch-assembly group.

Real time clock - circuit diagram sheet 9

The clock chip RTC72421 (I26) is responsible for generating time (year, month, day, time). In case of power failure or briefly turning off the analyzer, the signal from T1 to I26/15 sets the clock-chip into the standby mode (low power consumption). The capacitors C23 and C31 are built-in to save data (buffer time approx. 72 hours. J24 is only used for the board test (ICT).

Interface option - circuit diagram sheet 9

The plug J19 (databus and power supply) and J18 (address -, control -and interruptlines) are provided for the optional serial interfaces (additional plug on board 9410L02).

Interface driver - circuit diagram sheet 9

I63 (MAX232 or LT1181) are used as drivers for the serial µC-interface. The capacitors C84, C94, C95 and C96 with 22 µF or 1 µF are used dependent on the used driver. This component has two input and two output drivers. I63 is supplied with + 5 V and includes a voltage duplicator and a voltage inverter to produce the transmission level of +/- 10 V. For test purposes transmitter and receiver signals can be connected directly between µC and interface with jumper J22.

Interface Board 9410L02 (AVL COMPACT 2 SN <1500 and AVL COMPACT 3)

The interface board is an option for two further serial interfaces and is connected to the COBA Control Board (J18 and J19). A hardware handshake is possible with this interface.
The interface board is connected to the COBA Control Board by the plugs J1 and J4. The interface component I2 (65C52) is connected via J1 with the 8-bit databus of the µC (COBA Control Board I4). The connection with three address lines and the signal lines *RESET, *WR and the buffered (I1) signal CS_ACIA are established with J4. Further, the interrupt signals IRQ1 and IRQ2 are connected to the µC at the COBA Control Board via J4. The crystal Q1 with buffer I1 (Signal CLOCK) provides the frequency of 3.6864 MHz. The transistors T1 and T2 activate the hardware handshake with the ACIA-Signals DTR1 and DTR2 (0 V) which generates the Signal CTS1 or CTS2. The interface driver I3, I4 and I5 as well as the plugs J2 and J3 connect the COM-signals to the COM-sockets at the rear of the analyzer. MAX232 or LT1181 can be used as interface drivers. Depending on the type of the driver, the capacitors C4, C5, C6, C7, C9 and C10 with 22 µF or 1 µF, as well as C8 and C11 with 100 µF or 10 µF are used.

Interfaces

Three serial interfaces are provided in the complete version (AVL COMPACT 3). The RS232-sockets are located at the rear of the analyzer. The use of the interfaces is programmable with the operation programs. Multiple use is not possible.

NOTE: *Only one serial interface at AVL COMPACT 1 !*
In AVL COMPACT 2 systems with SN >1500, interface expansion is no longer supported by the software.

COM1

No hardware handshake is possible at this interface. The interface parameters are selectable.
Possible connections: **computer, host-computer, printer, barcode** (option).

Connector: 9-pin SUBMIN D/F

Interface parameters:

Baudrate 1200/2400/4800/7200/9600 Baud

COM1

Connection from plug J1, COBA Control Board circuit diagram sheet 9

Pin1	**+5V**	Digital	J1/4
Pin2	**RxD**	Receive data	J1/3
Pin3	**TxD**	Transmit data	J1/2
Pin5	**GND**	Ground-digital-mass	J1/5
Pin9	**RI**	Ring indicator	J1/6
Pin 4, 6-8	Not connected		

COM2

PC or Host	Interface parameters selectable
Printer[1]	Interface parameters selectable
Datalink ISE	Interface parameters fixed
Datalink Oximeter	Interface parameters fixed

Connector: 9-pin SUBMIN D/F

[1] A ticket printer can be connected to AVL COMPACT 2 from software version 2.20 on and AVL COMPACT 3.

Interface parameters:	selectable	fixed	
		ISE	**912**
Baudrate	1200/2400/4800/7200/9600	9600	7200
Databits	-	8	7
Stopbits	-	1	2
Parity	-	no	even
Hardware handshake	Yes/No	no	no

COM2

Connection from J2, Interface Board

Pin 2	**RxD**	Receive data	J2/2
Pin 3	**TxD**	Transmit data	J2/3
Pin 4	**DTR**	Data terminal ready	J2/4
Pin 5	**GND**	Ground-digital	J2/5
Pin 6	**DSR**	Data set ready	J2/6
Pin 7	**RTS**	Request to send	J2/7
Pin 8	**CTS**	Clear to send	J2/1
Pin 1, 9		Not connected	

COM3

PC or Host	Interface parameters selectable
Printer[2]	Interface parameters selectable
Datalink ISE	Interface parameters fixed
Datalink Oximeter	Interface parameters fixed
Modem (Telelink)	Interface parameters selectable

Connector: 25-pin SUBMIN D/F

Interface parameters:	selectable	fixed	
		ISE	**912**
Baudrate	1200/2400/4800/7200/9600	9600 Baud	7200
Databits	-	8	7
Stopbits	-	1	2
Parity	-	no	even
Hardware handshake	Yes/No	no	no

[2] A ticket printer can be connected to AVL COMPACT 2 from software version 2.20 on and AVL COMPACT 3.

COM3

Connection from plug J3, Interface Board

Pin 2	**TxD**	Transmit data	J3/2
Pin 3	**RxD**	Receive data	J3/3
Pin 4	**RTS**	Request to send	J3/4
Pin 5	**CTS**	Clear to send	J3/5
Pin 6	**DSR**	Data set ready	J3/6
Pin 7	**GND**	Ground-digital	J3/7
Pin 20	**DTR**	Data terminal ready	J3/1
Pin 1, 8-19, 21-25		Not connected	

Interface

Please install the Interface Board as follows:

1. Switch off the AVL COMPACT and disconnect from power supply.
2. Loosen the seven corresponding screws and open the rear wall.
3. Open COBA Control Board and
4. break out carefully the recess for COM2 and COM3.

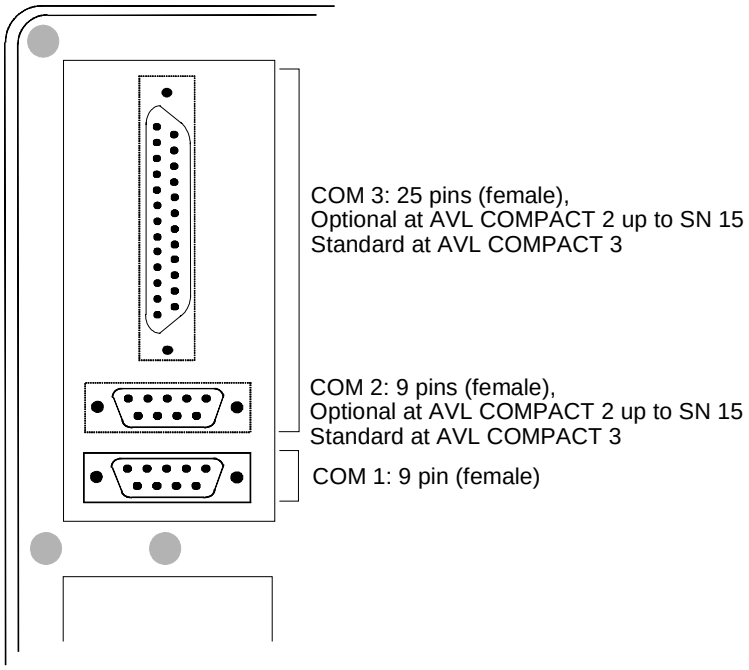

Fig. 6-7: Option interface

6. mount the two cable connectors at the corresponding interface and
7. hoist the Interface Board to the COBA Control Board.

NOTE: *Pay attention to the correct direction of the installation !*

7. Connect the cable connector to J2 and J3 at the Interface Board (blue plug board) and
8. fix the COBA Control Board.
9. Fix the rear wall again with the seven screws, connect the AVL COMPACT to power supply and switch on.
10. The interface is installed completely if you activate by selecting "USER PROGRAMS ⇒ SETTINGS ⇒ INTERFACE".

Telelink

(Option in AVL COMPACT 2 SN <1500, standard in AVL COMPACT 3)

To perform the tele maintenance via the PC of the AVL customer support a modem has to be used.
This option can only be performed with COM 3.

Technical specifications

– RS232 interface
  (only available with the AVL interface option COM 3)
– 8 databits, 1 stopbit, no parity, 1200 baud
– NONE / HARDWARE Handshake
– HW Handshake -> CTS/DTR
– ANSI terminal standard

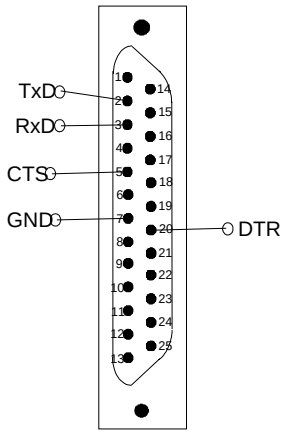

Fig. 6-8: Telelink

NOTE: *For safety reasons, the modem connector on the AVL COMPACT (COM 3) is designed as a socket. Depending on the modem connector, use of an adapter (gender changer) may be necessary.*

Modem pickup must be automatic and no echo should be transmitted.

Interface configuration at the modem and at the AVL COMPACT must match.

In case of problems with the line, the modem must be programmed as follows:
NONE = SW-Handshake (Xon/Xoff).

The interface configuration must also be saved at the modem.

Product description

After login by telemaintenance all AVL COMPACT display and printer information is bypassed to the ANSI terminal. Now the AVL COMPACT display is deactivated ("TELELINK").

The COMPACT display information is positioned at the ANSI terminal, the AVL COMPACT printer information is also transferred to the ANSI terminal and starts with a STX and stops with an ETX.

On the other hand the pushbuttons on the AVL COMPACT are simulated via terminal commands, the pushbuttons on the AVL COMPACT are deactivated.

General activation/deactivation in the function SETTINGS.

Default values are deactivated.

Telelink commands

@M	- login
@Q	- logout
@W	- pushbutton "ESC"
@E	- pushbutton "UP"
@R	- pushbutton "DOWN"
@T	- pushbutton "YES"
@H	- buzzer on
@h	- buzzer off
@L	- language toggle
@P <string>CR	- prints a string at the COMPACT printer string must be shorter than 25 characters
@D<string>CR	- displays a string at the COMPACT in fourth row of the display string must be shorter than 21 characters

Additional for AVL COMPACT 3:

@0 ... 9	- Keypad
@<	- Backspace
@-	- +/--Key

Barcode scanner

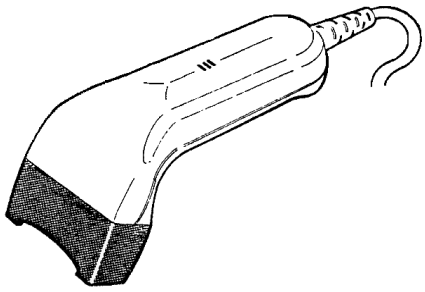

Fig. 6-9: Barcode scanner

Specifications

fixed adjustments:

- Baud rate: 1200 Baud
- Data bits: 8
- Stop bits: 1
- Parity: no

Connector:

9-pin SUBMIN D/M.

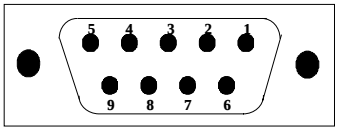

Fig. 6-10: 9-pin SUBMIN D/M

Pin 1..... +5 V
Pin 2..... RxD (receive data)
Pin 3..... TxD (transmit data)
Pin 4..... Not connected
Pin 5..... GND - Ground digital
Pin 6-8 ..... Not connected
Pin 9..... RI (ring indicator)

Installation

Connect and fix the barcode scanner to COM 1.

NOTE: *A blinking display means that the blinking function is active.*

NOTE: *If you use an original AVL IR barcode scanner the active reading unit of the IR barcode scanner never shows a red light after being connected !*

Please activate:

"USER PROGRAMS ⇒ SETTINGS ⇒ INTERFACE".

```
USER PROGRAMS.
ON
OFF
COM 1 o.k. ?
```

ON or OFF is blinking.

Select ON and confirm by pressing YES.

The following display appears:

```
USER PROGRAMS.
COM 1

Mode ?
```

Press YES to confirm.

Press ∨ twice and the following display appears:

```
USER PROGRAMS.
Barcode

Mode o.k. ?
```

Press YES to confirm.

The barcode scanner is now active.
From that moment during a measurement (within the sample standstill and the printout), as well as in the function "Data Input" - "Patient Number", it is possible to read the patient number with the help of a barcode scanner.

You may now select another option (PC / Host, Printer) by pressing ∨ or ∧ or exit from subprogram by pressing ESC twice.

Types of barcodes

All types of barcodes are preset and are transmitted with a header (PREFIX = STX) and a trailer (SUFFIX = ETX).

Type of barcode	Representation
Code 2/5 Interleaved	0123456789
Code 39	0123456789 ABCDEFGHIJ
Codabar	122 9
Code 128	Code 128

Fig. 6-11: Types of barcodes

Password

With this function the activation of the AVL COMPACT should be possible for authorized personnel only. The barcode scanner and the corresponding password-codecards (see Fig. 6-12) are used to activate the password.
The barcode cards allow three different types of access codes.

- Password-Code 1 (corresponding to Password-codecard 1)
- Password-Code 2 (corresponding to Password-codecard 2)
- Password-Code 3 (corresponding to Password-codecard 3)

In the user program "SETTINGS" ⇒ "INTERFACE" the interface COM 1 must be activated in the barcode mode.

NOTE: *Access codes have different priorities:*
1...highest access code
2...reduced access code
3...performance of measurements

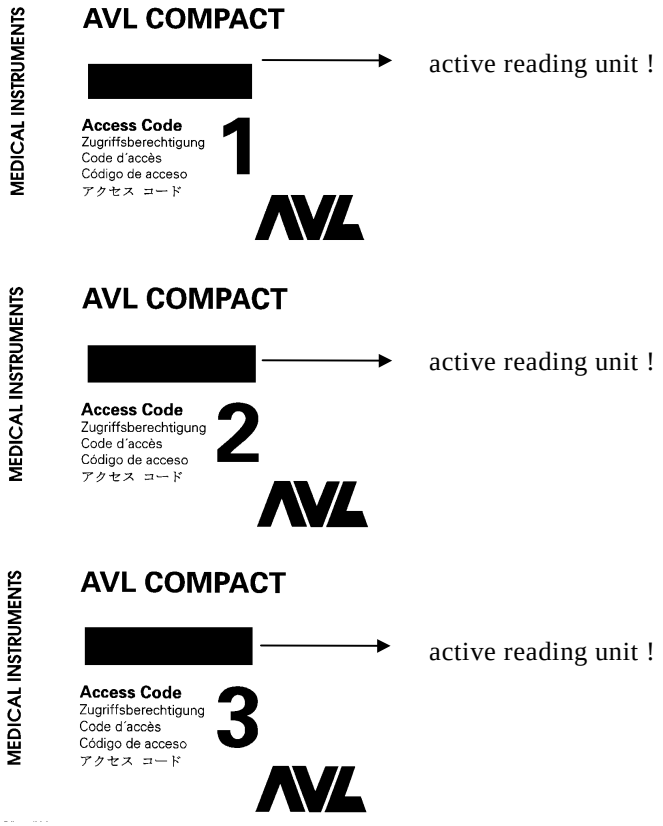

Fig. 6-12: Password-codecards

Datalink *(AVL COMPACT 2 up to SN 1500 and AVL COMPACT 3 only)*

Datalink from AVL COMPACT to AVL 988-3

The datalink allows to connect the AVL 988-3 to an AVL COMPACT and the corresponding measurement data will be transfered.
This connection will be possible by an interface installed in the AVL 988-3.

NOTE: *The connection between the analyzers has to be done before switching on.*
Use the right interface cable BV1811 to connect the AVL 988-3 to COM 2 of the AVL COMPACT or BV1814 for COM 3.

Description of the interface AVL 988-3

Pinning:

The 25-pin interface connector is positioned at the rear of the analyzer above the power switch.

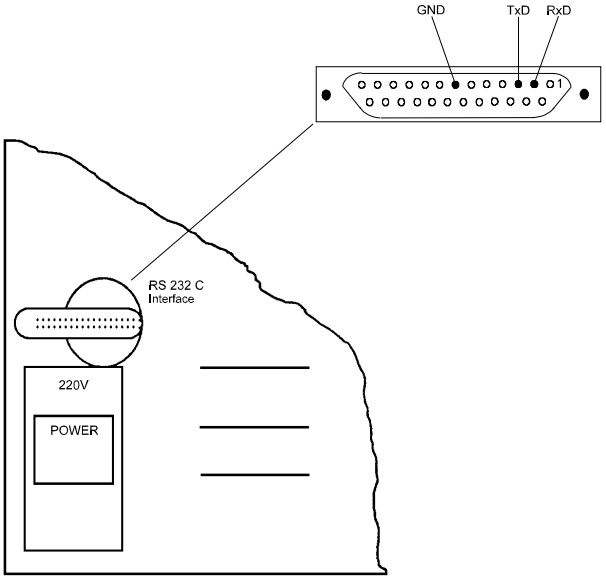

Fig. 6-13: Interface (1)

Pin 2..... RxD (receive data)
Pin 3..... TxD (transmit data)
Pin 7..... GND - Ground digital

Baud rate	9600 baud standard
Transmission format	8 data bits, 1 stop bit, ASCII-code, no parity
Data link check	The device sends "Control G" (Hex 07) The computer responds with „Control F“ (Hex 06)
Signal level	logical 1 = -12 ..... -3 V logical 0 = + 3 ..... +12 V max. cable lenght: 3m
Software report	When the datalink to the AVL COMPACT 2 is active and the 988-3 has finished a measurement, it is sending a "BEL" (Hex $07) to tell the AVL COMPACT 2 that the datalink report is ready to transmit. The AVL COMPACT 2 replies to the "BEL" with an "ACK" (Hex $06) to get the datalink report. If the "BEL" is not answered by the AVL COMPACT 2, the 988-3 continues sending the "BEL" every 10 seconds. If this does not happen until the start of a new measurement, the display "DATA NOT TRANSMITTED" appears. After receiving an "ACK" from the AVL COMPACT 2, the 988-3 is transmitting the datalink report in one part.
Transmission of the report data	The lines of the report, which appears in the same sequence as the printed report, are seperated by "CR" (Hex 0D) and "LF" (Hex 0A). The first transmitted character is "Control G" (Hex 07), the last transmitted character is "EOT" (Hex 04).

Installation

Connect the AVL COMPACT and the AVL 988-3 via connecting cable to the corresponding interface.
Switch on the analyzer and wait until "*READY*".

Activate the datalink function at AVL COMPACT as follows:

"USER PROGRAMS. ⇒ SETTINGS ⇒ INTERFACE".

```
USER PROGRAMS
Interface

COM 1 ?
```

By pressing ∨ you may select COM 2 or COM 3.

The following display appears (if you have selected COM 2):

```
USER PROGRAMS
Interface

COM 2 ?
```

Press YES to confirm.

```
USER PROGRAMS
ON
OFF
COM 2 ?
```

Select ON and confirm by pressing YES.

```
USER PROGRAMS
COM 2

Mode ?
```

Select the interface by pressing ∨ or ∧ and confim with YES.

```
USER PROGRAMS
Datalink 988

Mode o.k. ?
```

Select the datalink function by pressing ∨ or ∧ and confim with YES.

The datalink is active now.

You may activate the datalink function on COM 3 in the same way.

Activate the datalink function at AVL 988-3 as follows:

Activate the service code **DIL**.

NA - K - CL READY

Press (NO) until the following display appears:

INSTRUMENT TEST ?

Press (YES) to confirm.

SPECIAL FUNCTIONS ?

Press (YES) to confirm.

ADC TEST ?

Press (NO).

INTERFACE TEST ?

Press (NO).

PROGRAM VERSION ?

Press (NO).

SERVICECODE ?

Press (YES) to confirm.

SERVICECODE: AAA

Press (YES) to confirm.

Enter code **DIL**.

The first character is blinking:
With (NO) select the correct character and confirm by pressing .

The next character is blinking. Repeat this procedure until the code is correct.

INTERFACE ?

Press (YES) to activate the interface..

INTERFACE ON

The analyzer confirms activation for approximately 2 seconds.

The following display appears:

SERVICECODE: ?

Press (NO) until the following display appears:

PROGRAMMING ?

Press (YES) to confirm.

Press (NO) until the following display appears:

DATA LINK ?

Press (YES) to confirm.

DATA LINK ON

Press (NO) until the following display appears:

NA - K - CL READY

The measurement data of the AVL 988-3 are transmitted to the AVL COMPACT and there printed together with the bloodgas measurement data.

If you want to print the results parallel on the AVL 988-3, activate the corresponding auxiliary program (see chapter 3.4, "Printer Handling", AVL 988-3 Operator's Manual).

NOTE: *If the datalink is activated in the parameter combination NA - K - CA, the corrected Ca^{++} at pH = 7.4 will be calculated based on the measured Ca^{++} - value and the pH measured by the bloodgas analyzer.*

AVL COMPACT to AVL 9180

The so-called "Datalink" can be connected with the AVL 9180 and the AVL COMPACT and convey the respective measurement data.
The connection of the different instruments is possible due to the built in interface in the AVL 9180.

***NOTE**: Please see that the connection takes place before the instruments are turned on. Use the proper interface cable BV1812 for the connection to the COM 2 of the AVL COMPACT or BV1815 for the connection to the COM 3 of the AVL COMPACT.*

Description of the Interface (AVL 9180)

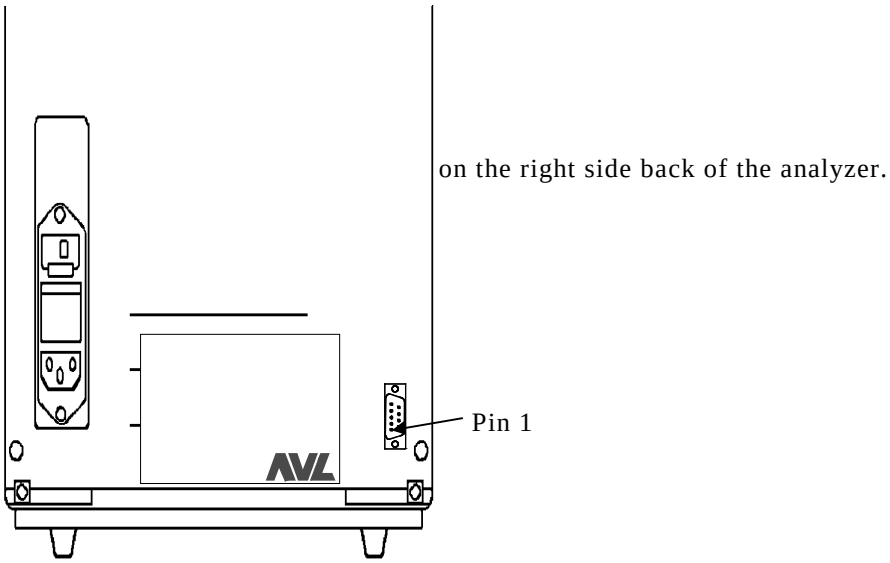

Fig. 6-14: Interface AVL 9180

Pin 1..... GND - Ground digital
Pin 2..... RxD (receive data)
Pin 3..... TxD (transmit data)
Pin 5..... GND - Ground digital
Pin 4, 6-9..... not connected

Baud rate	9600 baud standard
Transmission format	8 data bits, 1 stop bit, ASCII-code, no parity.
Data link check	The AVL 9180 sends "Control G" (Hex $07). The AVL COMPACT responds with "Control F" (Hex $06).
Signal level	logical 1 = -12 ..... -3 V logical 0 = + 3 ..... +12 V max. cable length: 3m
Software report	When the datalink to the AVL COMPACT is activated and the AVL 9180 has completed measurement, it sends a "BEL" (Hex $07) , to signal the AVL COMPACT that a datalink report is ready to be transmitted. The AVL COMPACT answers with a "ACK" (Hex $06) to receive the datalink report. If the AVL COMPACT does not answer the "BEL", the AVL 9180 sends a further signal every 10 seconds. If this does not occur until the start of a new measurement, "Data not transmitted" will be shown. If the AVL 9180 receives an "ACK" from the AVL COMPACT , an entire datalink report will be transmitted.
Transmission of the report data	The single lines of the protocol whose sequence corresponds to the printed protocol, are separated by "CR" (Hex $07) and "LF" (Hex $0A). The first transmitted sign is "Control G", the last transmitted sign is "EOT" (Hex $04).

Installation

Connect the AVL COMPACT and the AVL 9180 via connecting cable to the corresponding interface.
Switch on the analyzer and wait until "*READY*".

Activate the datalink function at AVL COMPACT as follows:

User programs? YES 5x ∨

Settings? YES 5x ∨

Interface? YES

```
USER PROGRAMS
Interface

COM 1 ?
```

By pressing ∨ you may select COM 2 or COM 3.
The following display appears (if you have selected COM 2):

```
USER PROGRAMS
Interface

COM 2 ?
```

Press YES to confirm.

```
USER PROGRAMS
ON
OFF
COM 2 ?
```

Select ON and confirm by pressing YES.

```
USER PROGRAMS
COM 2

Mode ?
```

Select the interface by pressing ⌄ or ⌃ and confirm with YES.

```
USER PROGRAMS
Datalink 988

Mode o.k. ?
```

Select the datalink function by pressing ⌄ or ⌃ and confirm with YES.
The datalink is active now.
You may activate the datalink function on COM 3 in the same way.

Activating the datalink on the AVL 9180

Activate the service code **KEY**.

```
READY      12:45
```

Press **No.**

```
PRINT FUNCTIONS ?
```

Press **No.**

```
QC/STANDARD/DIALYSAT
URINE SAMPLE?
```

Press **No.**

```
DAILY
MAINTENANCE?
```

Press **No.**

```
OPERATOR
FUNCTIONS?
```

Press **No.**

```
PROGRAM
INSTRUMENT?
```

Press **YES.**

```
Enter Code:
AAA?
```

Enter code **KEY**.

The first character is blinking:
With **No** select the correct character and confirm by pressing **YES**.

The next character is blinking. Repeat this procedure until the code is correct.

```
Program QC
Level 1 Ranges ?
```

Press **No.**

Program QC Level 2 Ranges ?

Press **No.**

Program QC Level 3 Ranges ?

Press **No.**

Program Normal Ranges ?

Press **No.**

Program Corr. Factors ?

Press **No.**

Program Bicarb. Corr. Factors?

Press **No.**

Program Acetate. Corr. Factors?

Press **No.**

Program Printer Setup?

Press **No.**

Program Interface?

Press **YES.**

Activate Data Link?

Press **YES** to activate the data link between AVL 9180 and AVL COMPACT.

In addition activate the interface of the AVL COMPACT.
In this data system the measurement values of the AVL 9180 and the AVL COMPACT will be transferred together and printed with the results of the blood analysis.

NOTE: *In the case of the parameter combination NA - K - CA, the Ca++ value from the data system is calculated from the pH value of the standardized Ca++ value from the AVL COMPACT, at pH =7,4 and is printed on the AVL COMPACT.*

After completion of datalink the following display appears on the AVL 9180:

```
Remain in
Program Func.?
```

Press **No**, the analyzer returns ro READY.

Datalink from AVL COMPACT to AVL 912

The datalink allows to connect the AVL 912 to an AVL COMPACT and the corresponding measurement data will be transfered.
This connection will be possible by an interface installed in the AVL 912.

NOTE: *The connection between the analyzer has to be done before switching on.*
Use the right interface cable BV1810 to connect the AVL 912 to COM 2 of the AVL COMPACT 2 or BV1813 for COM 3.

In the AVL COMPACT 2 and 3, in the mini sample mode, measurement of all desired parameters must completed, before a measurement can be startedin the AVL 912.

Description of the interface AVL 912

Pinning:

The 9-pin SUBMIN D/F interface connector is positioned at the rear of the analyzer.

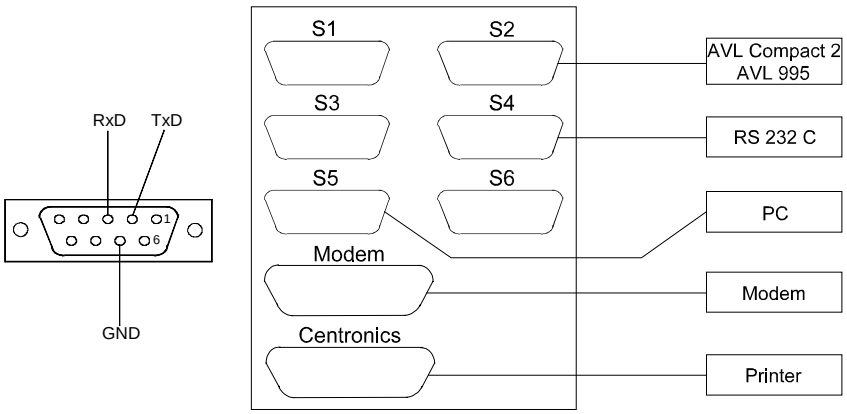

Fig. 6-15: Interface (2)

Pin 2..... TxD (transmit data)
Pin 3..... RxD (receive data)
Pin 7..... GND - Ground digital

Baud rate		7200 baud	
Transmission format		7 data bits, 2 stop bits, even parity	
Software report			
Control	**Hex**	^	**Description**
ACK	$06	^F	Acknowledge
ETX	$03	^C	End of text
CR	$0D	^M	Carriage return
LF	$0A	^J	Line feed
BEL	$07	^G	Bell
When the datalink to the AVL COMPACT is active and the AVL 912 has finished a measurement, it is sending a "DC2" (Hex $12) and a "ETX" (Hex $03),to tell the AVL COMPACT that the datalink report is ready to transmit. The AVL COMPACT replies with a "BEL" (Hex $07) to get the datalink report. After receiving an "BEL" from the AVL COMPACT, the AVL 912 is transmitting the datalink report in one part.			

Installation

Connect the AVL COMPACT and the AVL 912 via connecting cable to the corresponding interface.
Switch on the analyzer and wait until "*READY*".

Activate the datalink function at AVL COMPACT as follows:

"USER PROGRAMS ⇒ SETTINGS ⇒ INTERFACE".

```
USER PROGRAMS
Interface

COM 1 ?
```

By pressing ⌄ you may select COM 2 or COM 3.

The following display appears (if you have selected COM 2):

```
USER PROGRAMS
Interface

COM 2 ?
```

Press YES to confirm.

```
USER PROGRAMS
ON
OFF
COM 2 ?
```

Select ON and confirm by pressing YES.

```
USER PROGRAMS
COM 2

Mode ?
```

Select the interface by pressing ⌄ or ⌃ and confim with YES.

```
USER PROGRAMS
Datalink 912

Mode o.k. ?
```

Select the datalink function by pressing ⌄ or ⌃ and confim with YES.

The datalink is active now.

You may activate the datalink function on COM 3 in the same way.

Activate the datalink function at AVL 912 as follows:

There is no activation of the datalink function necessary at the AVL 912.
The datalink function is automatically activated.

7 TEST PROGRAMS

Electrodes **7-1**
Internal gas 1 7-2
Internal gas 2 (AVL COMPACT 2 and 3 only) 7-2
External gas 7-3
Buffer 1 7-4
Buffer 2 (AVL COMPACT 2 and 3 only) 7-4
Sample external 7-5
Gas 1 toggle 7-6
Wash 7-7

Contact path **7-7**

Interface **7-10**

Pumps **7-11**

Valves **7-12**

ADC **7-13**

Display test **7-20**

Printer test **7-20**

Program version **7-21**

Automatic selftest **7-21**

Service **7-22**
Software reset (AVL COMPACT 2 and 3 only) 7-23

7 Test programs

This chapter describes various test programs. Most of these test programs are necessary for the service technicians, but a few of them can also be done by the user.
Activate the sub program:

"FUNKTIONSPROG. ⇒ SYSTEMTEST"

There are the following system test functions:

- *ELECTRODES*
- *CONTACT PATH*
- *INTERFACES*
- *PUMPS*
- V*ALVES*
- *ADC*
- *DISPLAY*
- *PRINTER*
- *PROGRAM VERSION*
- *AUTOM. SELFTEST*
- *SERVICE*

Electrodes

This test program allows the user to check the individual electrode voltages.

```
USER PROGRAMS
System test

Electrodes ?
```

Press YES to confirm.

By pressing ⌄ or ⌃ you can now select the individual functions to check the electrodes.

Internal gas 1

Electrode test with the internal calibration gas 1.

```
USER PROGRAMS
Electrodes

Gas1 internal ?
```

Measuring range: CO_2: +300 ...+1500 mV
O_2: -640 .. -60 mV
(pH: a value appears on the display, but it is irrelevant)

Press YES and the following display appears:

```
USER PROGRAMS
pH: mV CO2: mV O2: mV
  XXX     882   -334
Electrode test o.k. ?
```

The displayed electrode voltages for PCO_2 and PO_2 must be within the range. Otherwise an electrode maintenance has to be done (see "Operator's Manual", chapter 6 and 11).

Press YES to confirm.

Press ∨ to select gas 2 (AVL COMPACT 2 and 3 only).

Internal gas 2 (AVL COMPACT 2 and 3 only)

Electrode test with the internal calibration gas.

```
USER PROGRAMS
Electrodes

Gas2 internal ?
```

Measuring range: CO_2: +120 … +1400 mV
O_2: -71 … +62 mV
(pH: a value appears on the display, but it is irrelevant)

Press YES and the following display appears:

```
USER PROGRAMS
pH: mV CO2: mV O2: mV
  XXX     882   -334
Electrode test o.k. ?
```

The displayed electrode voltages for PCO_2 and PO_2 must be within the range. Otherwise an electrode maintenance has to be done (see "Operator's Manual", chapter 6 and 11).

Press YES to confirm.

External gas

For this test external gas can be used to determine the slope of the electrodes or the zero point of PO_2.

The possible used gases are:

- gas mixtures, like the calibration gas or
- N_2 - gas, to determine the zero point of PO_2

NOTE: *Never use pure O_2 - and CO_2, -gas, they will affect the function of electrodes !*

For example, Gas 1:

Measuring range:	CO_2:	+300 … +1500 mV
	O_2:	-640 … -60 mV

```
USER PROGRAMS
Electrodes

Gas external ?
```

Press YES and the following display appears:

```
USER PROGRAMS
For gas
Open the flap !
```

After opening the flap an external gas has to be connected to the fill port and the following display appears:

```
USER PROGRAMS
pH:mV  CO2:mV  O2:mV
  XXX     882   -334
Electrode test o.k. ?
```

If the check is o.k. press YES and an acoustic signal together with the following display requests you to close the flap.

```
USER PROGRAMS
Please
Close the flap !
Electrode test o.k. ?
```

The display returns automatically to the previous display of this subprogram.

Buffer 1

With the help of this test you can check the voltage of the pH-Electrode.

Measuring range: pH: - 970 ... + 2100 mV

```
USER PROGRAMS
Electrodes

Buffer 1 ?
```

Press YES to confirm.

The peristaltic now pump starts pumping Buffer 1 into the measuring chamber and at the same time this display appears:

```
USER PROGRAMS
pH:mV  CO2:mV  O2:mV
  1513   1329  -358
Electrode test o.k. ?
```

Press YES to confirm.

The analyzer starts a wash and dry cycle and returns afterwards to the previous display of the subprogram.

Buffer 2
(AVL COMPACT 2 and 3 only)

With the help of this test you can check the voltage of the pH electrode.

Measuring range: pH: - 1570 ... + 1410 mV

```
USER PROGRAMS
Electrodes

Buffer 2 ?
```

Press YES to confirm.

The peristaltic pump now starts pumping Buffer 2 into the measuring chamber and at the same time this display appears:

```
USER PROGRAMS
pH:mV  CO2:mV  O2:mV
  1513   1329  -358
Electrode test o.k. ?
```

Press YES to confirm.

The analyzer starts a wash and dry cycle and returns afterwards to the previous display of the subprogram.

Sample external

There are different possible samples to measure:

- Buffer 1
  Measuring range: pH: - 970 ... + 2100 mV
- QC (e.g. Confitest)

```
USER PROGRAMS
Electrodes

Sample external ?
```

Press YES to confirm.

```
USER PROGRAMS
For sample
Open the flap
```

Open flap and inject sample.

```
USER PROGRAMS
Inject sample or
select aspiration
Aspiration ?
```

Press YES if the sample will be aspirated, otherwise inject the sample with a syringe.

```
USER PROGRAMS
Sample is being
aspirated
```

As soon as the requisite amount of liquid is aspirated, an acoustic signal will sound and the following display will appear:

```
USER PROGRAMS
Remove capillary
Close the flap !
```

Take the adapter or capillary out of the fill port and close the flap.

```
USER PROGRAMS
pH: mV CO2: mV O2: mV
  1499    1438   -393
Electrode test o.k. ?
```

Press YES to confirm. The analyzer performs a wash and dry cycle and returns automatically to the previous display of this subprogram.

Gas 1 toggle

An electrode test with the internal precisions gas.

```
USER PROGRAMS
Electrodes

Gas1 toggle ?
```

Press YES and the following display appears:

```
USER PROGRAMS
pH: mV CO2: mV O2: mV
   XXX     882   -334
Electrode test o.k. ?
```

NOTE: *In AVL COMPACT 2 and 3, a micro sample is possible.*
In micro sample mode, only one parameter can be selected.

In AVL COMPACT 2 SN >1500 and AVL COMPACT 3, a mini sample is possible.

The displayed electrode voltages for PCO_2 and PO_2 must be within the range. Otherwise an electrode maintenance has to be done (see "Operator's Manual", chapter 6 and 11).

Press YES to confirm.

Wash

Washing the path.

```
USER PROGRAMS
Electrodes

Wash ?
```

Press YES to confirm.

Press ESC to exit from the subprogram.

Contact path

```
USER PROGRAMS
System test

Contact path ?
```

Press YES to confirm.

There are 4 contacts which make 2 contact paths.

In AVL COMPACT 1 and 2 systems with a serial number <1500 the following display apperars:

```
USER PROGRAMS
K Ref: 0     K I: 0
2778* 3570 2748* 3510
Contact path o.k. ?
```

In AVL COMPACT 2 with a serial number >1500 and AVL COMPACT 3 the following display apperars:

```
USER PROGRAMS
K Ref:0  K I:0  K 0:0
   3570   3510   3530
Contact path o.k. ?
```

(0) - contact path is open.
(*) - limits for K Ref and K I - please refer to chapter 8, "Adjustments".

There are two ways to test the contact paths:

- **Internal buffer:**

Press ⌄ or ⌃ and you can activate or deactivate the peristaltic pump in two speeds.

Buffer 1 is aspirated into the measuring chamber.

In AVL COMPACT 1 and 2 systems with a serial number <1500 the following display apperars:

```
USER PROGRAMS
K Ref: 1       K I: 1
2778* 1553 2748*  946
Contact path o.k. ?
```

In AVL COMPACT 2 with a serial number >1500 and AVL COMPACT 3 the following display apperars:

```
USER PROGRAMS
K Ref:1  K I:1  K 0:1
   1782    587    357
Contact path o.k. ?
```

The contact paths are closed - (1).
Open the flap and the measuring chamber will be emptied.
The display changes from 1-(closed) to 0-(open).

Close the flap. If check is o.k press YES.

A wash and dry cycle is performed.

- **External sample**:

Open the flap and aspirate a sample (by adapter or capillary).

Press ⌄ or ⌃ and you can activate or deactivate the peristaltic pump in two speeds.

The sample is aspirated into the measuring chamber.

In AVL COMPACT 1 and 2 systems with a serial number <1500 the following display apperars:

```
USER PROGRAMS
K Ref: 1        K I: 1
2778* 1553 2748*  946
Contact path o.k. ?
```

In AVL COMPACT 2 with a serial number >1500 and AVL COMPACT 3 the following display apperars:

```
USER PROGRAMS
K Ref:1  K I:1  K 0:1
   1782    587    357
Contact path o.k. ?
```

The contact paths are closed - (1).
Open the flap and the measuring chamber will be emptied.
The display changes from 1-(closed) to 0-(open).

Close the flap. If check is o.k. press YES.
A wash and dry cycle is performed.

Press ESC to exit from the subprogram.

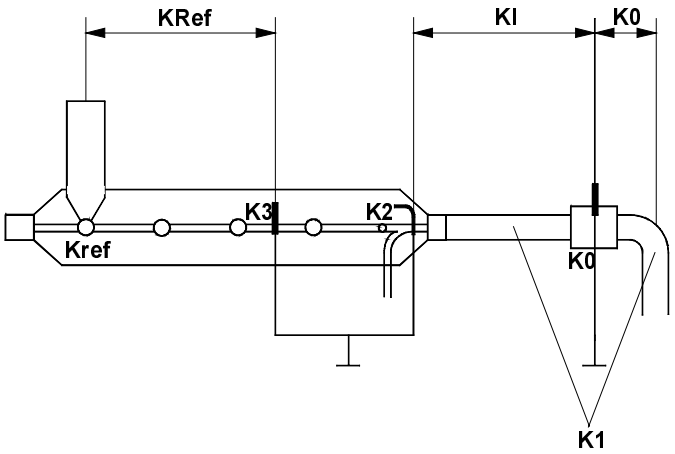

Fig. 7-1: Principle of contact path

Interface

```
USER PROGRAMS
System test

Interface ?
```

Press YES and you get the following display, if the interface is not activated:

```
USER PROGRAMS

INTERFACE Error
```

The display returns automatically to the previous display.

AVL Compact interface test

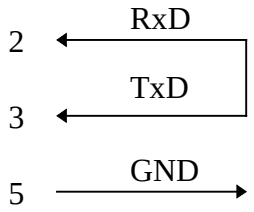

Now it is necessary to connect pin 2 and pin 3 on the COMPACT interface.
If now the test "Interface" is activated again the following display appears:

```
USER PROGRAMS

Interface o.k.
```

Press ESC to exit from the subprogram.

Pumps

With this test program the user can check the pumps.

```
USER PROGRAMS
System test

Pumps ?
```

Press YES to confirm.

By pressing ∨ or ∧ you can now select:

- Peristaltic pump - speed 1?
- Peristaltic pump - speed 2?
- Vacuum pump?
- KCl pump?

Press YES to confirm the selected pump.

For example: Peristaltic pump - speed 1

```
USER PROGRAMS
Pumps
OFF
P. Pump speed 1 ?
```

Press YES, the display changes to "**ON**" and the peristaltic pump starts with speed 1.

Pressing YES you can now deactivate and activate the pump.

With ∨ or ∧ you may select another pump.

Press YES to confirm.

Press ESC to exit from subprogram.

Valves

This test is available to check all valves, by opening and closing them.

```
USER PROGRAMS
System test

Valves ?
```

Press YES. By pressing ⌄ or ⌃ you can now select a valve which is in the following position:

Valve		Position	Press YES	Comment
V1	Rinse	closed	open	C1 only
V2	PP bypass	closed	open	
V3	Buffer 1	closed	open	
V4	Gas	closed	open	
V5	Air	closed	open	
V6	Vacuum	open	closed	
V7	Rinse	closed	open	
V8	MC bypass	closed	open	
V9	MC valve	open	closed	
V10	REF valve	closed	open	
GV1	Gas valve1	closed	open	
GV2	Gas valve2	closed	open	C2 and C3 only
V11	Buffer 2	closed	open	C2 and C3 only
V12	Cleaning	closed	open	C2 and C3 only

NOTE: *Open gas valves GV1 and GV2 only briefly, if you are not sure, whether the gas line is open.*
The resulting overpressure could damage the AVL COMPACT.

ADC

This test program allows the user to check the analog voltages as listed below*:

- CH1 O_2
- CH2 CO_2
- CH3 pH
- CH4 Barometer
- CH5 MC Temperature
- CH6 SP Temperature
- CH7 ADC Ref.
- CH8 AGND
- CH9 K 0
  (AVL COMPACT 2 with a serial number >1500 and AVL COMPACT 3)
- CH9 K I
- CH10 K Ref
- CH11 Waste
- CH12 Rinse
- CH13 Ref
- CH14 AGND
- CH15 NC

* another order in AVL COMPACT 1 up to SN 1000 !

```
USER PROGRAMS
System test

ADC ?
```

Press YES to confirm.

```
USER PROGRAMS
ADC

CH1 O2 ?
```

Press ∨ or ∧ to get the next channel:
For example:

- CH1 O_2 ?

Press YES to confirm.

```
USER PROGRAMS
O2:          -297.0mV

Channel o.k. ?
```

The actual voltage -297.0 mV for the PO_2-Electrode is displayed.

Press YES to confirm.

Press ESC to exit from subprogram.

Press ∨ or ∧ to get the next channel:

- CH2 CO_2 ?

Press YES to confirm.

```
USER PROGRAMS
CO2:         1022.7mV

Channel o.k. ?
```

The actual voltage 1022.7 mV for the PCO_2-Electrode is displayed.

Press YES to confirm.

Press ESC to exit from subprogram.

- CH3 pH ?

Press YES to confirm.

```
USER PROGRAMS
pH:         2500.0 mV

Channel o.k. ?
```

The actual voltage 2500.0 mV for the pH-Electrode is displayed.

Press YES to confirm.

Press ESC to exit from subprogram.

- CH4 Barometer ?

Press YES to confirm.

```
USER PROGRAMS
Baro:        959.9 mV
           720.0 mmHg
Channel o.k. ?
```

959.9 mV, the actual voltage for the ambient air pressure.
720.0 mmHg the calculated value from mV to mmHg.

Press YES to confirm.

Press ESC to exit from subprogram.

- CH5 MC Temperature ?

Press YES to confirm.

```
USER PROGRAMS
MK Temp:        1.2mV
1.3           37.0 °C
Channel o.k. ?
```

1.2 mV:	actual voltage
37.0 °C:	actual temperature
1.3:	characteristic value (see chapter 8, "Adjustments")

Press YES to confirm.

Press ESC to exit from subprogram.

- CH6 SP Temperature ?

Press YES to confirm.

```
USER PROGRAMS
VS Temp:       1.5 mV
1.4           37.0 °C
Channel o.k. ?
```

1.5 mV:	actual voltage for the sample inlet path temperature.
37.0 °C:	actual temperature.
1.4:	characteristic value (see chapter 8, "Adjustments").

Press YES to confirm.

Press ESC to exit from subprogram.

- CH7 ADC Ref. ?
  (AVL COMPACT 1 with a serial number >1000 and AVL COMPACT 2 and 3 only)

Press YES to confirm.

```
USER PROGRAMS
REF         1666.7 mV

Channel o.k. ?
```

1666.7 mV: +5 V analog/3.

Press YES to confirm.

Press ESC to exit from subprogram.

- CH8 AGND ?

Press YES to confirm.

```
USER PROGRAMS
AGND:          0.1 mV

Channel o.k. ?
```

0.1 mV:analog ground.

Press YES to confirm.

Press ESC to exit from subprogram.

- CH9 K 0 ?
  (AVL COMPACT 2 with a serial number >1500 and AVL COMPACT 3)

Press YES to confirm.

```
USER PROGRAMS
K 0:        3155.0 mV
2724.0
Channel o.k. ?
```

3155.0 mV: actual voltage for the contact path.
2724.0: characteristic value (see chapter 8, "Adjustments").

Press YES to confirm.

Press ESC to exit from subprogram.

- CH9 K I ?

Press YES to confirm.

```
USER PROGRAMS
K I:        3155.0 mV
2724.0
Channel o.k. ?
```

3155.0 mV: actual voltage for the contact path.
2724.0: characteristic value (see chapter 8, "Adjustments").

Press YES to confirm.

Press ESC to exit from subprogram.

- CH10 K Ref ?

Press YES to confirm.

```
USER PROGRAMS
K Ref:      3560.0 mV
2783.0
Channel o.k. ?
```

3560.0 mV: actual voltage for the contact path.
2783.0: characteristic value (see chapter 8, "Adjustments").

Press YES to confirm.

Press ESC to exit from subprogram.

- CH11 Waste ?

Press YES to confirm.

```
USER PROGRAMS
Waste:      3874.0 mV
876.0
Channel o.k. ?
```

3874.0 mV: actual voltage - shows that the Waste container is empty.
876.0: characteristic value (see chapter 8, "Adjustments").

Press YES to confirm.

Press ESC to exit from subprogram.

- CH12 Rinse ?
  (AVL COMPACT 1 with a serial number >1000 and AVL COMPACT 2 and 3)

Press YES to confirm.

```
USER PROGRAMS
Rinse.:     2719.0 mV
3341.0
Channel o.k. ?
```

2719.0 mV: actual voltage
3341.0: characteristic value (see chapter 8, "Adjustments").

Press YES to confirm.

Press ESC to exit from subprogram.

- CH13 Ref ?
  (AVL COMPACT 1 with a serial number >1000 and AVL COMPACT 2 and 3)

Press YES to confirm.

```
USER PROGRAMS
REF:         428.0 mV
876.0
Channel o.k. ?
```

428.0 mV: actual voltage
876.0: characteristic value (see chapter 8, "Adjustments").

Press YES to confirm.

Press ESC to exit from subprogram.

- CH14 AGND ?

Press YES to confirm.

```
USER PROGRAMS
AGND:          0.1 mV

Channel o.k. ?
```

0.1 mV: actual voltage

Press YES to confirm.

Press ESC to exit from subprogram.

- CH15 NC ?

Press YES to confirm.

```
USER PROGRAMS
NC:              59.0

channel o.k. ?
```

59.0 mV: actual voltage

Press YES to confirm.

Press ESC to exit from subprogram.

Display test

This test checks the display.

```
USER PROGRAMS
System test

Display test ?
```

Press YES and you get the following display:

```
▓▓▓▓▓▓▓▓▓▓▓▓▓▓▓▓▓▓▓▓▓▓
▓▓▓▓▓▓▓▓▓▓▓▓▓▓▓▓▓▓▓▓▓▓
▓▓▓▓▓▓▓▓▓▓▓▓▓▓▓▓▓▓▓▓▓▓
▓▓▓▓▓▓▓▓▓▓▓▓▓▓▓▓▓▓▓▓▓▓
```

The display is correct, if all characters have the same intensity.

Press ESC to exit the subprogram.

Printer test

This test program checks the printer.

```
USER PROGRAMS
System test

Printer test ?
```

Press YES and you get the following printout:

```
THE QUICK BROWN FOX
JUMPS OVER THE LAZY DOG
the quick brown fox
jumps over the lazy dog
0123456789!#$%&´()*
+,-./:<=>?[\]↑↓23{|}→←
```

Press ESC to exit the subprogram.

Program version

This test program shows the user the program version of the analyzer.

```
USER PROGRAMS
System test

Program version ?
```

Press YES to confirm.

```
USER PROGRAMS


COBA1[1]-ED-X.XX
```

The display shows the actual program version.

Press ESC to exit the subprogram.

Automatic selftest

This test checks the internal circuit of the analyzer.

```
USER PROGRAMS
System test

Autom. selftest ?
```

Press YES to confirm.

For example you get the following printout:

RAM o.k. EEPROM o.k. CLOCK/TIME o.k. INTERFACE o.k. EXT.ADC o.k. INT.ADC o.k. NO BUFFER pO2 MEASURE. o.k.	The parameters are always shown in their current condition (o.k. or ERROR). Additionally all alarms are also printed, in this example: "NO BUFFER".

[1] In AVL COMPACT 2 "COBA2-ED-X.XX" is displayed, or "COBA3-ED-X.XX " in AVL COMPACT 3.

Service

NOTE: *This subprogram may only be used by AVL trained service personnel !*

With the help of this test program you may affect the following adjustments and checks:

AVL COMPACT 1:

Check and adjustment (up to SN 1500) of

- Measuring chamber temperature and sample inlet path temperature as well as

Check and adjustment of:

- Contact path (K I, K Ref.) and filling levels (Waste, REF (>1000), Rinse (>1000))
- Baro (Baro S and Baro pH)
- Serial number
- pH-Offset

AVL COMPACT 2 and 3:

Check and adjustment of:

- Contact path (K I, K Ref., K 0 (AVL COMPACT 2 with a serial number >1500)) and filling levels (Waste, REF, Rinse)
- Baro (Baro S and Baro pH)
- Serial number
- Correlation

For more details please refer to chapter 8, "Adjustments".

Software reset
(AVL COMPACT 2 and 3 only)

You may use this subprogram to reset interface parameters or to remove software problems.

Please activate:

"USER PROGRAMS ⇒ SYSTEMTEST ⇒ SERVICE" and the corresponding code "**DEF**".

```
USER PROGRAMS
Systemtest

Service ?
```

Confirm by pressing YES; the following display appears:

```
USER PROGRAMS
Code:            AAA

Code o.k.?
```

Activate: **DEF**

The first character is blinking.

Select D, E and F with ⌄ or ⌃ and confirm each character by pressing YES.

NOTE: *The software reset resets all individual configurations to default values (e.g. physiologic area), deletes all QC data and alarm memory !*

8 ADJUSTMENTS

Summary **8-1**
KCl pump 8-1
Measuring chamber 8-1
Sample inlet path 8-2
COBA Control Board 8-2
Description of test points and potentiometers 8-4

Pressure of KCl pump **8-7**

Reference voltage **8-7**

Enter and confirm characteristic values **8-8**

Measuring chamber temperature **8-9**
AVL COMPACT 1 and AVL COMPACT 2 up to SN 1500 8-9
AVL COMPACT 2 from SN 1500 on and AVL COMPACT 3 8-10

Sample inlet path temperature **8-11**
AVL COMPACT 1 and AVL COMPACT 2 up to SN 1500 8-11
AVL Comapct 2 from SN 1500 on and AVL COMPACT 3 8-12

Contact path and filling levels **8-13**
K 0 AVL COMPACT 2 from SN 1500 on and AVL COMPACT 3 8-13
K I 8-14
K Ref 8-15
Waste 8-16
REF (AVL COMPACT 1 from SN 1000 on and AVL COMPACT 2 and 3) 8-17
Rinse (AVL COMPACT 1 from SN 1000 on and AVL COMPACT 2 and 3) 8-18

Baro **8-19**
Baro S 8-19
Baro PH 8-19

Serial number **8-20**

O_2-Zero point (AVL COMPACT 1 only) **8-21**

Accept values **8-22**

Check time/date **8-22**

pH-Offset (AVL COMPACT 1 only) **8-23**

Correlation (AVL COMPACT 2 and 3 only) **8-24**

Service device - electrode simulator GD0124 8-28
Testing of Electrode Channels 8-28
Testing or adjust contact path and filling levels 8-29

Service device - reference resistors (equivalent circuit) 8-30
Testadapter for COBA Control: GD0148 and GD0147 (AVL COMPACT 1 up to SN 1000) 8-30
Testadapter for COBA Control: GD0176 (AVL COMPACT 1 from SN 1000 on and AVL COMPACT 2 and 3) 8-31

Summary 8-32

8 Adjustments

This chapter describes the adjustments which have to be done after a change of the following components to guarantee a trouble free function of the analyzer:

CAUTION! *Some of these adjustments have to be done with rear wall open and switched on analyzer.*
These adjustments may only be used by AVL trained service personnel !

Summary

KCl pump

After changing the KCl pump (see chapter 5) the pressure has to be adjusted (see page 8-7).

Measuring chamber

After changing the measuring chamber module the following adjustments have to be done:

Measuring chamber temperature
(AVL COMPACT 1 and 2 up to SN 1500 only)
Contact path K 0
(AVL COMPACT 2 with serial number >1500 and AVL COMPACT 3**)**
Contact path K I
Contact path K Ref.

Settings see page 8-13.

Check measuring chamber temperature (see page 8-9). The temperature should be 37 °C ± 0.1 °C.
If the temperature is not in admissible range:

- check thermal contact between measuring chamber and thermometer (thermometer hole filled with water ?)
- check thermometer, replace if necessary
- change measuring chamber
- change COBA Control Board

Sample inlet path

The following settings or adjustments have to be done for AVL COMPACT 1 and 2 up to SN 1500:

- **Sample inlet path temperature**
- **Contact path K** I

The following settings or adjustments have to be done for AVL COMPACT 1 and 2 from SN 1500 on and AVL COMPACT 3:

- **Check the the sample inlet path temperature** (see page 8-11)
- **Contact path K 0 and K I** (see page 8-13)
  (K 0 applies for AVL COMPACT 2 with a serial number >1500 and AVL COMPACT 3).

If the sample inlet path temperature is not in admissible range, change sample inlet path or COBA Control Board.

COBA Control Board

After changing the COBA Control Board the following adjustments have to be done:

Reference voltage
Contact path
Filling levels
Baro
Serial Number
Measuring chamber temperature (AVL COMPACT 1 and 2 up to SN 1500)
Sample inlet path temperature (AVL COMPACT 1 and 2 up to SN 1500)

NOTE: *Afterchanging the COBA Control Board switch on the AVL COMPACT and wait for appr. 5 minutes for warm-up !*

Test equipment: digital voltmeter (DVM) $4^1/_2$ digits, simulator GD0124 with adapter cable COMPACT 2 or testadapter GD0147, precision thermometer, precision reference barometer, screw driver.

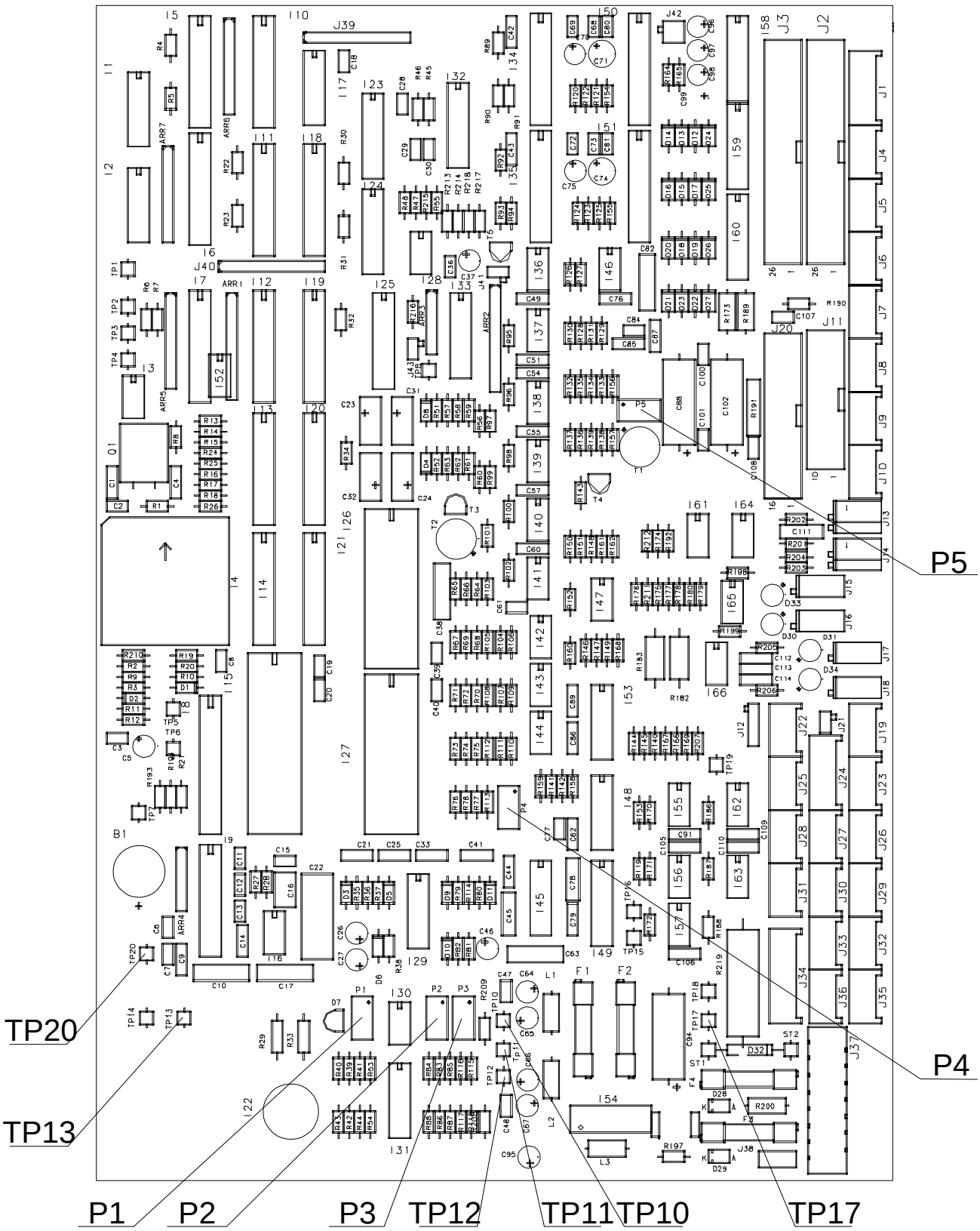

Fig. 8-1: COBA Control Board - test points (TP), potentometer (P)
AVL COMPACT 1 up to SN 1000

Description of test points and potentiometers

AVL COMPACT 1 up to SN 1000

P1	+UREF = 2500 mV
P2	Baro - zero point
P3	Baro - absolute pressure
P4	Measuring chamber temperature
P5	Reference value - sample inlet path temperature (approx. 1,4 V)
TP10	-5 V analog
TP11	GND analog
TP12	+ 5 V analog
TP13	+ 5 V digital
TP17	+ 24 V
TP20	+ 2,5 V UREF

AVL COMPACT 1 from SN 1000 on,
AVL COMPACT 2 and 3

Test points (TP)

Test point:	Description:	Test for:
TP9 (AGND) TP5 (UREF)	GND Analog + 2.5 V UREF	Reference voltage

Potentiometers (P)

Potentiometer:	Description:	Voltage:
P1	UREF reference voltage	2500 mV ± 3 mV
P2 (AVL COMPACT 1 and 2 up to SN 1500)	Measuring chamber heating	400 mV ... + 400 mV
P3 (AVL COMPACT 1 and 2 up to SN 1500)	Sample inlet path heating	Set value printed on plug J1 (SI-Board).

Plugs (J)

J7 (Fig.8-1)	Plug to C2-Connector Board

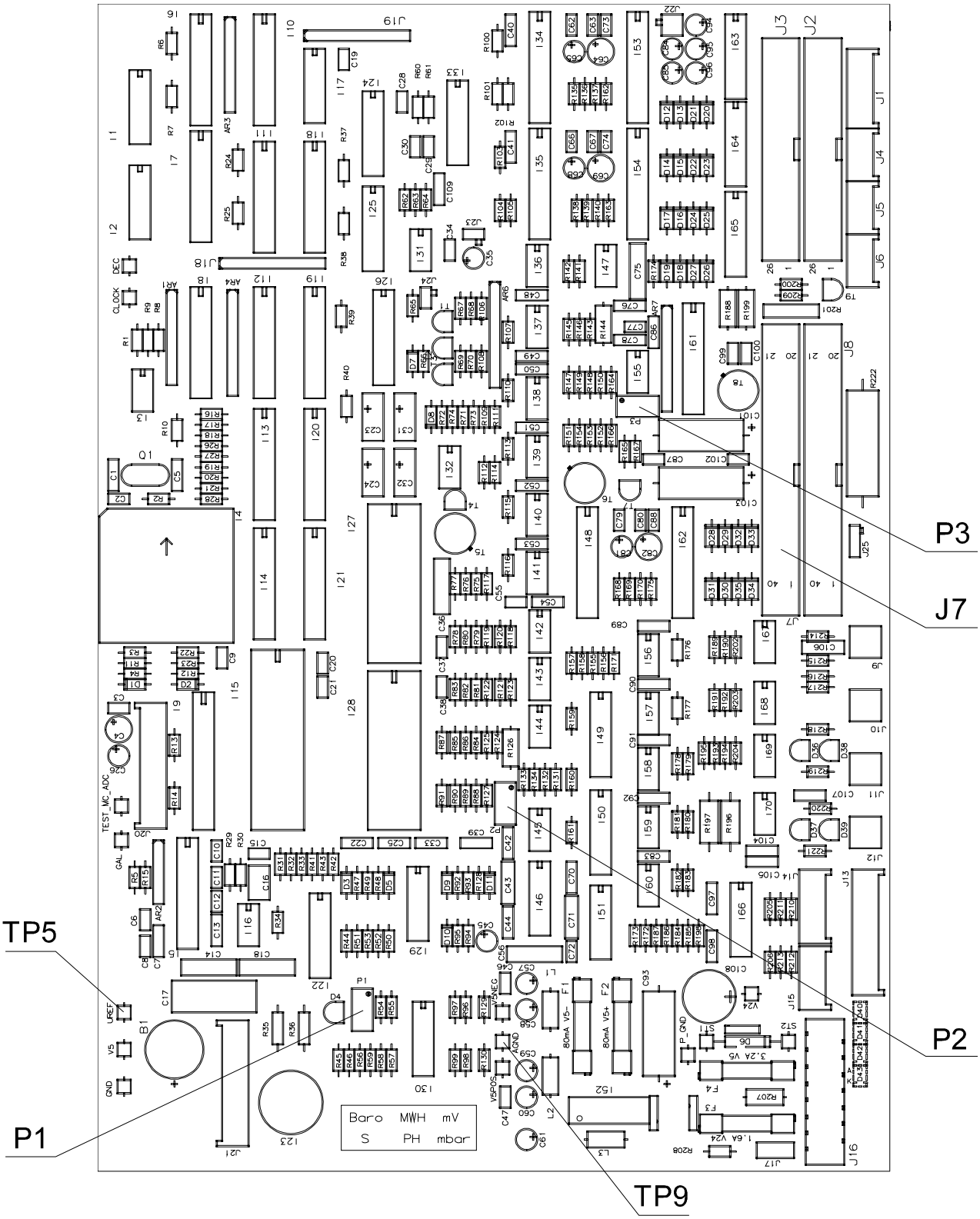

Fig. 8-2: COBA Control Board - test points (TP), potentiometer (P), plugs (J)
AVL COMPACT 1 from SN 1000 to SN 1500 and AVL COMPACT 2 up to SN 1500

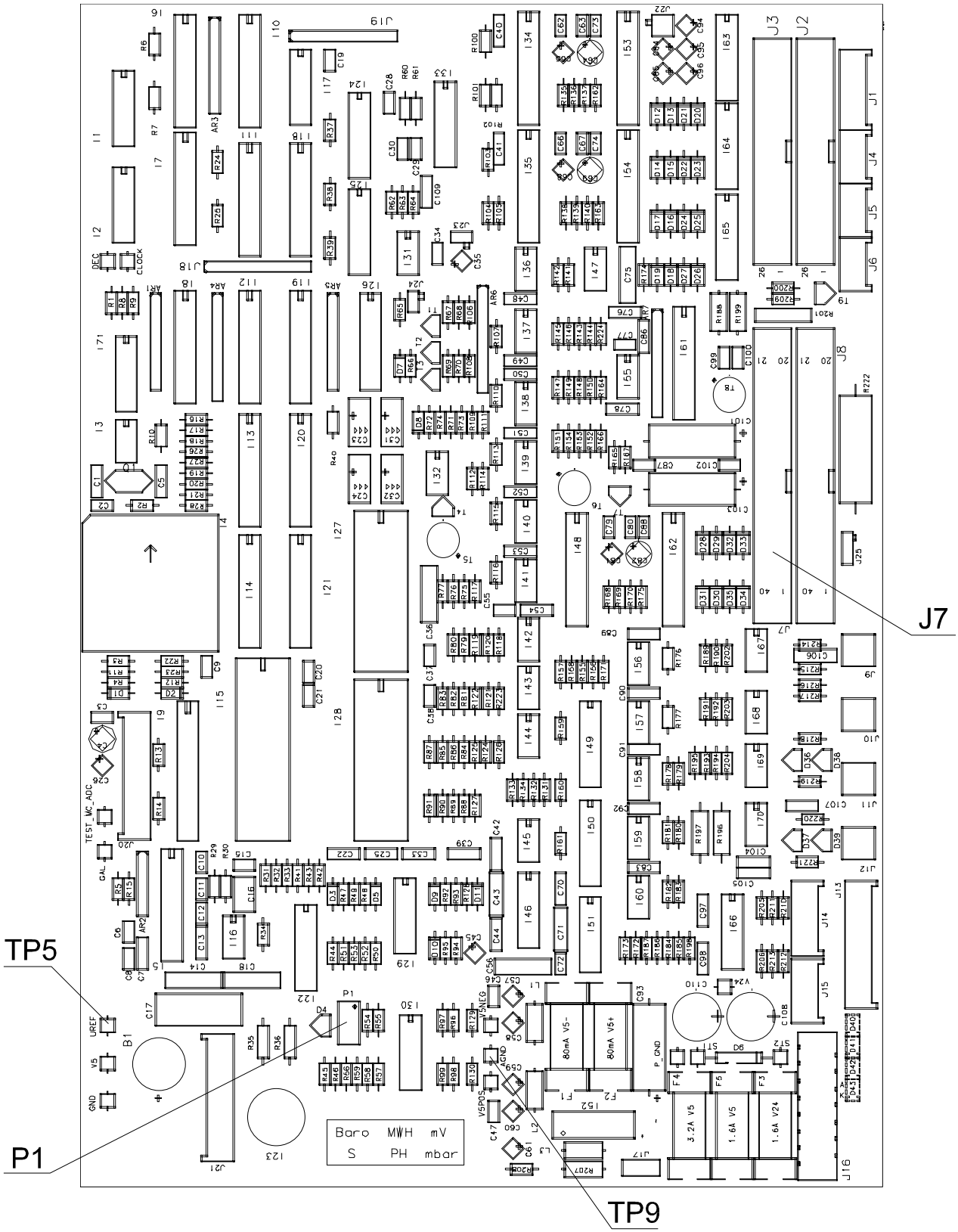

Fig. 8-3: COBA Control Board - Test points (TP), potentiometer (P), plugs (J)
AVL COMPACT 1 and 2 from SN 1500 on and AVL COMPACT 3

Pressure of KCl pump

The KCl pump supplies the necessary pressure of 110 mbar. If the pump was changed the pressure must be checked or adjusted.

NOTE: *A pressure measurement device is necessary !*

- Remove KCl filling tube (unmarked) from the pH-Reference electrode
- Check KCl trap (free passage of the KCl nozzle)
- Insert empty KCl container and activate:

"USER PROGRAM ⇒ MAINTENANCE ⇒ REF.ELECTR. ⇒ FILL"

The tube will be pumped empty (avoid spattering !)

Connect pressure measurement device to filling tube and activate:

"USER PROGRAM ⇒ SYSTEMTEST ⇒ PUMPS ⇒ KCl PUMP"

Check pressure of 110 mbar ± 10 mbar or set screw at the pump (see Fig.8-2, marking).

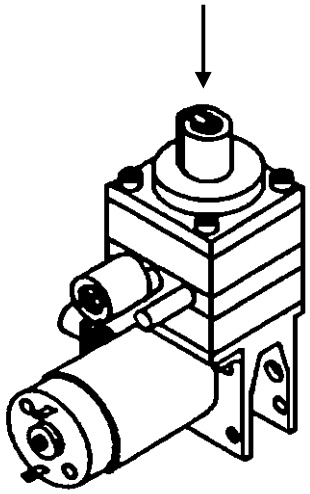

Fig. 8-4: KCl pump

Reference voltage

Connect test point AGND and UREF (Fig. 8-1, Fig. 8-2 or Fig. 8-3) with a voltmeter and read the voltage at the display.

Nominal voltage value: **2500 mV ± 3 mV**

With the potentiometer P1 (Fig. 8-1, Fig. 8-2 or Fig. 8-3) set the correct voltage.

Enter and confirm characteristic values

"USER PROGRAMS ⇒ SYSTEM TEST ⇒ SERVICE" and the corresponding code SER.

```
USER PROGRAMS
Systemtest

Service ?
```

Confirm by pressing YES - the following display appears:

```
USER PROGRAMS
Code:              AAA

Code o.k.?
```

Activate: **SER**

The first character is blinking.

Select S, E and R with ∨ or ∧ and confirm each character by pressing YES.

```
USER PROGRAMS
Service

Installation ?
```

Confirm by pressing YES.

You have now the possibility to adjust contact path and filling levels, baro and serial number.

NOTE: *All reference values which were confirmed in the installation mode by pressing YES, are temporarily stored in the RAM.*
After leaving the user program "INSTALLATION" by pressing ESC the question "ACCEPT VALUES ?" appears. Confirm by pressing YES and all temporarily stored values will be accepted.
To exit by pressing ESC or NO is possible without storing the values.

Measuring chamber temperature

NOTE: *Test equipment: thermometer*

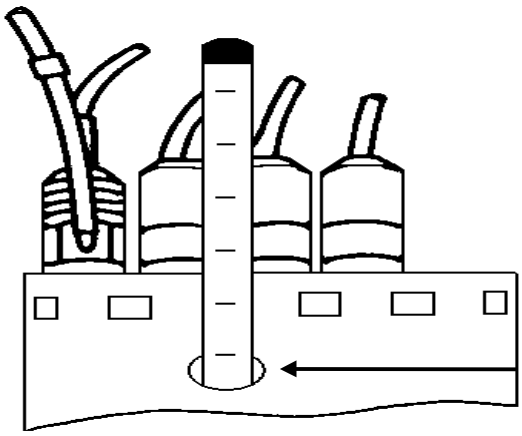

Fig. 8-5: Measuring chamber temperature

Before you set the measuring chamber temperature, fill water into the thermometer hole (Fig. 8-5) and put the precision thermometer or a digital thermometer sensor there in.

Please wait one minute and activate:

AVL COMPACT 1 and AVL COMPACT 2 up to SN 1500

"USER PROGRAMS. ⇒ SYSTEM TEST ⇒ SERVICE"

```
USER PROGRAMS
Installation

MC Temperature ?
```

Confirm by pressing YES.

Check the measuring chamber temperature (37.0 °C ± 0.1 °C) with the thermometer.

NOTE: *At a temperature increase the correct voltage is reached after appr. 30 seconds, at a temperature decrease after appr. 90 seconds.*

In AVL COMPACT 1 up to SN 1000, the temperature of the measuring chamber can be adjusted with potentiometer P4 on the COBA Control Board (see Fig. 8-1).

In AVL COMPACT 1 with the serial numbers 1000 to 1500 and in AVL COMPACT 2 up to SN 1500, the temperature of the measuring chamber can be adjusted with potentiometer P2 on the COBA Control Board (see Fig. 8-2).

In AVL COMPACT 1 from SN 1500 on, the adjustment function was eliminated, but the values must be checked and confirmed.

```
USER PROGRAMS
MC temp.:   xxxx.x mV

MC Temperature o.k. ?
```

If the following values are within the ranges indicated, confirm by pressing YES :

measuring chamber temperature: 37.1 °C
voltage AVL COMPACT 1 and 2 up to SN 1500: **- 400 mV to + 400 mV**
voltage AVL COMPACT 1 from SN 1500 on: **- 10 mV to + 5 mV**
Oherwise see page 8-1.

By pressing ∨ or ∧ you can now select further adjustments.

You have the possibility to change to mode "Accept Values"
by pressing ESC

AVL COMPACT 2 from SN 1500 on and AVL COMPACT 3

Please activate: "USER PROGRAMS. ⇒ SYSTEM TEST ⇒ SERVICE"

```
USER PROGRAMS
ADC

CH 5 MC Temp. ?
```

Confirm by pressing YES.

Check the measuring chamber temperature (37.0 °C ± 0.1 °C) with the thermometer.

```
USER PROGRAMS
MK Temp.: -     6.1 mV
               37.1 C
Channel o.k. ?
```

If the value is set to 37.1 °C and the voltage value is within
- 10 mV to + 5 mV then confirm by pressing YES.
Oherwise see page 8-1.

Sample inlet path temperature

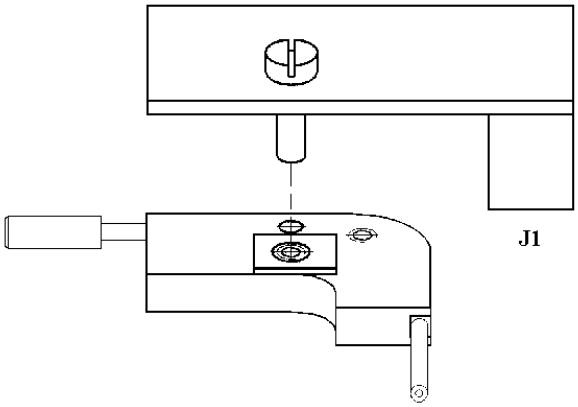

Fig. 8-6: Sample inlet path -
AVL COMPACT 1 and AVL COMPACT 2 up to SN 1500

The sample inlet is the connection between fill port and the measuring chamber.

AVL COMPACT 1 and AVL COMPACT 2 up to SN 1500

Please activate: "USER PROGRAMS ⇒ SYSTEM TEST ⇒ SERVICE"

```
USER PROGRAMS
Installation

SP Temperature ?
```

Confirm by pressing YES.

NOTE: *At a temperature increase the time constant of rise is appr. 30 seconds until the voltage value is stable; at a temperature decrease after appr. 60 seconds.*

In AVL COMPACT 1 up to SN 1000, the temperature of the sample inlet path can be adjusted with potentiometer P5 on the COBA Control Board (see Fig. 8-1).

In AVL COMPACT 1 with the serial numbers 1000 to 1500 and in AVL COMPACT 2 up to SN 1500, the temperature of the sample inlet path can be adjusted with potentiometer P3 on the COBA Control Board (see Fig. 8-2).

Set the value corresponding to the value printed on plug **J1** (SI-Board).

In AVL COMPACT 1 from SN 1500 on, the adjustment function was eliminated, but the values must be checked and confirmed.

```
USER PROGRAMS
SP. temp.:   xxxx.xmV
(xxxx.x)
SP Temperature.o.k.?
```

If the value is set to 37.1 °C and the voltage value is within **- 10 mV to + 5 mV** then confirm by pressing YES.
Oherwise see page 8-2.

By pressing ∨ or ∧ you can now select further adjustments.

You have the possibility to change to mode "Accept Values" by pressing ESC

AVL Comapct 2
from SN 1500 on and
AVL COMPACT 3

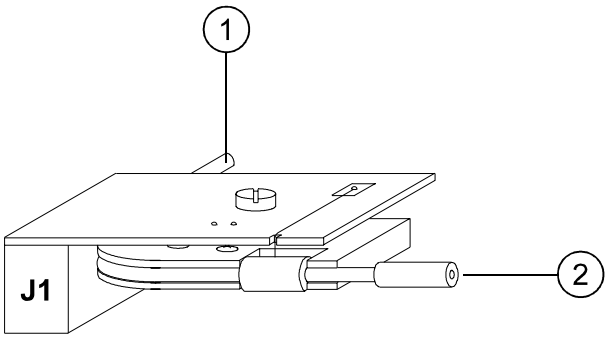

Fig. 8-7: Sample inlet path -
AVL COMPACT 2 from SN 1500 on and AVL COMPACT 3

Please activate: "USER PROGRAMS ⇒ SYSTEM TEST ⇒ ADC"

```
USER PROGRAMS
ADC

CH 6 SP Temperature ?
```

Confirm by pressing YES.

```
USER PROGRAMS
VS Temp.: -     3.5 mV
               37.1 C
SP Temperature.o.k.?
```

If the value is set to 37.1 °C and the voltage value is within
- 10 mV to + 5 mV then confirm by pressing YES.
Oherwise see page 8-2.

Contact path and filling levels

AVL COMPACT 1 up to SN 1000:

Connect the testadapter GD0147 or the simulator GD0124 with the adapter cable COMPACT 1 to **J11** and **J20** on the COBA Control Board.

AVL COMPACT 1 from SN 1000 on and AVL COMPACT 2 and 3:

Connect the testadapter GD0176 or the simulator GD0124 with the adapter cable COMPACT to **J7** on the COBA Control Board.

K 0
AVL COMPACT 2 from SN 1500 on and AVL COMPACT 3

Please activate:

```
USER PROGRAMS
Installation

K 0 ?
```

Confirm by pressing YES .

Set: **"390 kOhm, K1, K2"** at the simulator.
K 0 is correct, if the voltage is **2800 mV ± 200 mV**.

```
USER PROGRAMS
K 0         xxxx.x mV

K 0 o.k. ?
```

Confirm by pressing YES.

By pressing ∨ or ∧ you can now select further adjustments.

You have the possibility to change to mode "Accept Values"
by pressing ESC.

If the voltage is not correct, change sample inlet path, measuring chamber or COBA Control Board.

K I

Activate:

```
USER PROGRAMS
Installation

K I ?
```

Confirm by pressing YES .

Set: **"390 kOhm, K1, K2"** at the simulator.
K I is correct, if the voltage is **2800 mV ± 200 mV**.

```
USER PROGRAMS
K I         xxxx.x mV

K I o.k. ?
```

Confirm by pressing YES.

By pressing ∨ or ∧ you can now select further adjustments.

You have the possibility to change to mode "Accept Values"
by pressing ESC.

If the voltage is not correct, change sample inlet path, measuring chamber or COBA Control Board.

K Ref

```
USER PROGRAMS
Installation

K Ref ?
```

Set: **"390 kOhm, K3, REF"** at the simulator.
K Ref. is correct, if the voltage is **2800 mV ± 200 mV**.

```
USER PROGRAMS
K Ref       xxxx.x mV

K Ref o.k. ?
```

Confirm by pressing YES.

By pressing ⌄ or ⌃ you can now select further adjustments.

You have the possibility to change to mode "Accept Values" by pressing ESC.

If the voltage is not correct, change pH-Reference electrode, measuring chamber or COBA Control Board.

Waste

```
USER PROGRAMS
Installation

Waste ?
```

Confirm by pressing YES.

AVL COMPACT 1 up to SN 1000:

Connect the resistor **R = 20 kOhm** to the Waste detector or connect the testadapter GD0148 to **J21** on the COBA Control Board.

AVL COMPACT 1 from SN 1000 on and AVL COMPACT 2 and 3:

Connect the resistor **R = 20 kOhm** to the Waste detector or connect the testadapter GD0176 or the adapter cable COMPACT to **J7** on the COBA Control Board.

```
USER PROGRAMS
Waste        830.0 mV

Waste o.k. ?
```

Waste contact sensitivity is correct, if the voltage value is **800 mV ± 200 mV**.

Confirm by pressing YES.

By pressing ∨ or ∧ you can now select further adjustments.

You have the possibility to change to mode "Accept Values" by pressing ESC

If the voltage value is not within the admissible range:

- Waste detector connected by the resistor
- Check Waste cap - replace if necessary
- Check connection to J6 (C2-Connector Board)
- Check connection to J7 (COBA Control Board)
- Change COBA Control Board

REF
(AVL COMPACT 1 from SN 1000 on and AVL COMPACT 2 and 3)

```
USER PROGRAMS
Installation

Ref ?
```

Confirm by pressing YES.

Connect the resistor **R = 20 kOhm** to the reference detector or connect testadapter GD0176 or the adapter cable COMPACT to **J7** on the COBA Control Board or the simulator GD0124.

```
USER PROGRAMS
Ref          780.0 mV

Ref o.k. ?
```

Ref contact sensitivity is correct, if the voltage is **800 mV ± 200 mV**.

Confirm by pressing YES.

By pressing ⌄ or ⌃ you can now select further adjustments.

You have the possibility to change to mode "Accept Values" by pressing ESC

If the voltage is not within the admissible range:

- Check cap of Reference solution - replace if necessary
- Check connection to J8 (C2-Connector Board)
- Check connection to J7 (COBA Control Board)
- Change COBA Control Board

Rinse
(AVL COMPACT 1 from SN 1000 on and AVL COMPACT 2 and 3)

```
USER PROGRAMS
Installation

Rinse ?
```

Confirm by pressing YES.

Connect the resistor **R = 1 MOhm** to the Rinse detector or connect the testadapter GD0176 or the adapter cable COMPACT to **J7** on the COBA Control Board.

```
USER PROGRAMS
Rinse       3460.0 mV

Rinse o.k. ?
```

Rinse contact sensitivity is correct, if the voltage is **3500 mV ± 400 mV.**

Confirm by pressing YES.

By pressing ∨ or ∧ you can now select further adjustments.

You have the possibility to change to mode "Accept Values" by pressing ESC

If the voltage is not within the admissible range:

- Check Rinse cap - replace if necessary
- Check connection to J7 (C2-Connector Board)
- Check connection to J7 (COBA Control Board)
- Change COBA Control Board

Baro

***NOTE**: The adjustment described does not apply to AVL COMPACT 1 up to SN 1000 and a COBA Control Board 9410L01.*
If the baro sensor is defective, The COBA Control Board must be replaced in these devices.

This procedure has do be done after changing COBA Control Board or Baro Sensor I23.
In that case do not forget to note the values at the baro-label and put the label on the COBA Control Board.

Baro S

Please activate:

```
USER PROGRAMS
Installation

Baro S ?
```

Confirm by pressing YES .

```
USER PROGRAMS
S:                xxx

Baro S o.k. ?
```

Set value from the baro-label of COBA Control Board by pressing ∨ or ∧.

Accept value by pressing YES .

Baro PH

```
USER PROGRAMS
Installation

Baro PH ?
```

Confirm by pressing ESC.

```
USER PROGRAMS
PH:       xxxx.x mbar
MWH:      xxxx.x nV
Baro PH o.k. ?
```

Set value from precision reference barometer by pressing ⌄ or ⌃.

Confirm by pressing YES.

At the same time the corresponding ADC-value will be stored.

Please note the value at the baro-label of COBA Control Board.

By pressing ⌄ or ⌃ you can now select further adjustments.

You have the possibility to change to mode "Accept Values"
by pressing ESC

Serial number

```
USER PROGRAMS
Installation

Serial number ?
```

Confirm by pressing YES.

```
USER PROGRAMS
SN: xxxxx

Serial number o.k. ?
```

Set each digit from serial number by pressing ⌄ or ⌃ and accept value by pressing YES.

Confirm by pressing YES.

By pressing ⌄ or ⌃ you can now select further adjustments.

You have the possibility to change to mode "Accept Values"
by pressing ESC

O_2-Zero point *(AVL COMPACT 1 only)*

Please activate:

```
USER PROGRAMS
Installation

O2 zero point  ?
```

Press YES to confirm.

```
USER PROGRAMS.
O2        (- xx.x) mV

O2 zero point o.k. ?
```

You can only check the O_2-Zero point. Disconnect the *P*O2-Electrode. The indicated value must be **0 V ± 66 mV**.

Confirm by pressing YES.

By pressing ∨ or ∧ you can now select further adjustments.

You have the possibility to change to mode "Accept Values" by pressing ESC

If the voltage is not within the admissible range:

- Check cable connection from O_2-socket to the COBA Control Board.
- Change COBA Control Board.

Accept values

```
USER PROGRAMS
Installation

Accept values ?
```

Confirm by pressing YES and the temporary stored values will be transferred into the EEPROM (permanent stored).

NOTE: *If the adjustment was not done correctly , exit the installation by pressing ESC or NO.*
No storage of reference values.

After fitting the AVL COMPACT perform a main calibration.

Check time/date

Activate:

Settings? YES 2x ∨

Timings? YES

Time/Date? YES

```
USER PROGRAMS
Th, 04-Jul-96   14:10

Time/Date o.k. ?
```

On the display the day is blinking.
You may change the day shown by pressing ∨ or ∧.
Confirm the selected day by pressing YES .

The date is blinking.
Enter the selected date, month, year and time (hour / minute) step by step.
As soon as the last character is confirmed by pressing YES , the display will fade out.

At this point, you may either select another time setting by pressing ∨ or ∧ and activate the selected setting by pressing YES or exit from the user program by pressing ESC.

pH-Offset (AVL COMPACT 1 only)

This function can be used to adjust the pH-value to other systems.

Please activate:

"USER PROGRAMS ⇒ SYSTEMTEST ⇒ SERVICE"

```
USER PROGRAMS
Code:              AAA

Code o.k.?
```

Activate: **SER**

The first character is blinking.

With ⌄ or ⌃ select the correct character and confirm by pressing YES until the code is correct.

```
USER PROGRAMS
Service

Installation
```

Press ⌄ and you get the following display:

```
USER PROGRAMS
Service

pH-offset ?
```

Press YES and you get the following display:

```
USER PROGRAMS
pH: 0.000

pH-offset o.k. ?
```

With ⌄ or ⌃ you can now determine within **-0.050 und 0.050** the correct pH-offset.

Press YES to confirm.

Correlation (AVL COMPACT 2 and 3 only)

NOTE: *We do not recommend to use conversionfactors (other than slope=1 and intercept=0).*
The research division of AVL has carefully investigated the AVL COMPACT measuring system and has compared it to standardized methods.
Conversionfactor setting is only intended to adapt the AVL COMPACT measurement results to aberrating values of existing BG-analyzers, which are already placed at the customer.
Slope is a kind of gain factor, multiplied with the internal calibrated slope.
Intercept is a kind of offset, added to the measured value.

```
USER PROGRAMS
Service

Correlation ?
```

Press YES to activate.

PO2:

```
USER PROGRAMS
Correlation

pO2 ?
```

Press YES and you get the following display:

```
USER PROGRAMS
pO2

Slope ?
```

Press YES and you get the following display:

```
USER PROGRAMS
pO2:    1.00

Slope o.k. ?
```

By pressing ∨ or ∧ the value may be changed between 0.90 and 1.10.

Accept value by pressing YES otherwise press ESC .

By pressing ∨ you get the following display:

```
USER PROGRAMS
pO2

Intercept ?
```

Press YES and you get the following display:

```
USER PROGRAMS
pO2:     0.0

Intercept o.k. ?
```

By pressing ∨ or ∧ the value may be changed between -10.0 and 10.0.

Accept value by pressing YES otherwise press ESC .

Press ESC to exit from subprogram.

PCO2:

Press ∨ to get the following display:

```
USER PROGRAMS
Correlation

pCO2 ?
```

Press YES and you get the following display:

```
USER PROGRAMS
pCO2

Slope ?
```

Press YES and you get the following display:

```
USER PROGRAMS
pCO2:   1.00

Slope o.k. ?
```

By pressing ∨ or ∧ the value may be changed between 0.90 and 1.10.

Accept value by pressing YES otherwise press ESC .

By pressing ∨ you get the following display:

```
USER PROGRAMS
pCO2

Intercept ?
```

Press YES and you get the following display:

```
USER PROGRAMS
pCO2:   0.00

Intercept o.k. ?
```

By pressing ∨ or ∧ the value may be changed between -5.0 and 5.0.

Accept value by pressing YES otherwise press ESC .

Press ESC to exit from subprogram.

pH:

Press ∨ to get the following display:

```
USER PROGRAMS
Correlation

pH ?
```

Press YES and you get the following display:

```
USER PROGRAMS
pH

Slope ?
```

Press YES and you get the following display:

```
USER PROGRAMS
pH:    1.000

Slope o.k. ?
```

By pressing ∨ or ∧ the value may be changed between 0.990 and 1.010.

Accept value by pressing YES otherwise press ESC.

By pressing ∨ you get the following display:

```
USER PROGRAMS
pH

Intercept ?
```

Press YES and you get the following display:

```
USER PROGRAMS
pH:    0.000

Intercept o.k. ?
```

By pressing ∨ or ∧ the value may be changed between -0.050 and 0.050.

Accept value by pressing YES otherwise press NO.

Press ESC to exit from subprogram.

Service device - electrode simulator GD0124

Testing of Electrode Channels

AVL COMPACT 1 up to SN 1000:

Connect the electrode simulator GD0124 to the AVL COMPACT 1, by disconnecting J11 and J20 from the COBA Control Board (see Fig. 8-1) and inserting the electrode simulator.

AVL COMPACT 1 from SN 1000 on and AVL COMPACT 2 and 3:

Connect the electrode simulator GD0124 to the AVL COMPACT, by disconnecting J7 from the COBA Control Board (see Fig. 8-2 and Fig. 8-3) and inserting the electrode simulator.

1. Connect electrodes cables
2. Switch simulator on
3. Switch to ADC ∅ / SIM
4. Switch contact path selector to K I
5. Select pH / PCO_2 and PO_2 range in sequence of testing
6. Call ADC - TEST:

USER PROGRAMS ? YES, ^

SYSTEM TEST ? YES, ^, ^

ADC ? YES,

CH1 O_2 ? YES, READ, ESC , v

CH2 CO_2 ? YES, READ, ESC , v

CH3 pH ? YES, READ, ESC , ESC

Check channels in accordance to the table:

Channel	SYSTEM TEST ADC	COMPACT display [mV]		
		Range 1 [mV]	Range 2 [mV]	Range 3 [mV]
PO_2	CH1 O2	(7100) - 630 ... - 780	(3600) - 290 ... - 410	(800) - 25 ... - 120
PCO_2	CH2 CO2 press button S / H	(400) 1440 ... 1600 ± 40	(4000) 810 ... 990 ± 40	(7600) 230 ... 380 ± 40
pH	CH3 press button H	(600) 250 ... 550 ± 80	(4000) 1360 ... 1700 ± 80	(7800) -------- --------

***NOTE**: By pressing the button "S" a 1 GOhm resistor is connected on line to the shield; by pressing "H" the 1 GOhm resistor is connected to the hot lead.*

The values may drift within the specified range when the button is pressed.
If the displayed values are out of the specified range, the amplifier is not ok (bias - current).
- Change COBA Control Board
- Change electrode cable(s)

Testing or adjust contact path and filling levels

AVL COMPACT 1 up to SN 1000:

Connect the electrode simulator GD0124 to the AVL COMPACT 1:

1. Disconnect **J11** and **J20** (see Fig. 8-1) from COBA Control Board
2. Disconnect pH-Reference electrode
3. Connect GD0124 with adapter cable COMPACT 1, as well as the reference channel with the electrode cable.
4. Connect the reference resistor GD0148 to **J21** on the COBA Control Board in place of the fill level sensors.

AVL COMPACT 1 from SN 1000 on and AVL COMPACT 2 and 3:

Connect the electrode simulator GD0124 to the AVL COMPACT:

1. Disconnect **J7** (see Fig. 8-2 and Fig. 8-3) from COBA Control Board
2. Disconnect pH-Reference electrode
3. Connect GD0124 and **J7** with adapter cable COMPACT, as well as the reference channel with the electrode cable.

Testing contact path please activate:

"USER PROGRAMS ⇒ SYSTEM TEST ⇒ ADC ⇒ Chxx".

Testing contact path please activate:

"USER PROGRAMS ⇒ SYSTEM TEST ⇒ SERVICE ⇒ INSTALLATION".

Contact Path Selector Switch		Sensitivity Selector	ADC - Channel	Set Point [mV]
K 0	K2, K1	390 K I kOhm	CH9 K I	2800 ± 200
K I	K2, K1	390 K I kOhm	CH9 K I	2800 ± 200
K Ref	K3, REF	390 K Ref kOhm	CH10 K Ref	2800 ± 200
Waste			CH11 Waste	800 ± 200
Rinse			CH12 Rinse	3500 ± 400
Ref			CH13 Ref	800 ± 200

NOTE: *Incorrect setting (e.g. without simulator GD0124) will cause a system failure !*

Service device - reference resistors (equivalent circuit)

Testadapter for COBA Control:
GD0148 and GD0147 (AVL COMPACT 1 up to SN 1000)

- **Reference resistor - Waste: GD0148**

  J21 ..... Waste

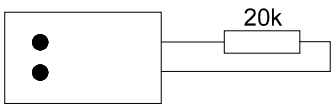

- **Test adapter for COBA Control Board: GD0147**

  J11 ..... Sample inlet path

  J20 ..... Measuring chamber

  Ref. ..... Connection to Reference electrode

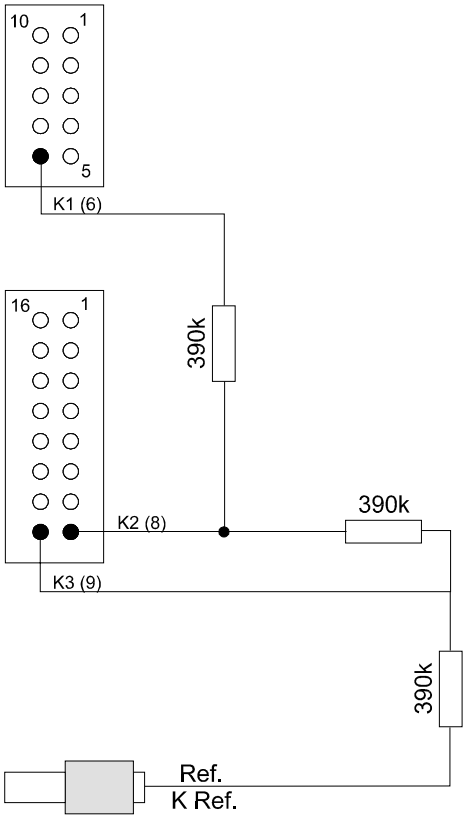

Fig. 8-8: Test adapter - AVL COMPACT 1 up to SN 1000

Testadapter for COBA Control: GD0176

(AVL COMPACT 1 from SN 1000 on and AVL COMPACT 2 and 3)

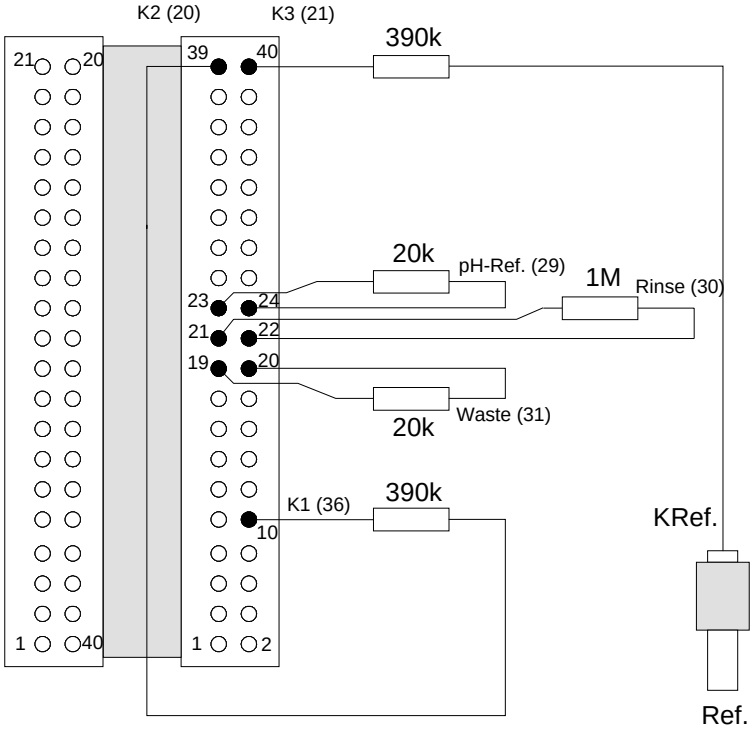

Fig. 8-9: Test adapter - AVL COMPACT 1 from SN 1000 on and AVL COMPACT 2 and 3

Summary

Pressure of KCl pump	110 mbar ± 10 mbar
Reference voltage	2500 mV ± 3 mV
Measuring chamber temperature	AVL COMPACT 1 and 2 (up to SN 1500) - -400 mV ... +400 mV (37,1 °C) AVL COMPACT 1 and 2 (from SN 1500 on) and AVL COMPACT 3 - -10 mV ... + 5 mV (37,1 °C)
Sample inlet path temperature	AVL COMPACT 1 and 2 (up to SN 1500) - Set value printed on plug J1 (SI-Board). AVL COMPACT 1 and 2 (from SN 1500 on) and AVL COMPACT 3 - - 10 mV ... + 5 mV (37,1 °C)
Contact path and filling levels: K 0 K I K Ref Waste REF Rinse	 2800 mV ± 200 mV 2800 mV ± 200 mV 2800 mV ± 200 mV 800 mV ± 200 mV 800 mV ± 200 mV 3500 mV ± 400 mV
Baro: Baro S Baro PH	 See value at baro-label. Air pressure ± 10 mV.
Serial number	
O_2-Zero point (AVL COMPACT 1 only)	- 66 mV ... + 66 mV
pH-Offset (AVL COMPACT 1 only)	- 0.050 ... + 0.050

9 TROUBLESHOOTING / MAINTENANCE

Troubleshooting **9-1**
Displayed and printed warning 9-1
Displayed and printed alarms 9-1
Alarm causes 9-2
Error messages and instructions for elimination 9-3
Insufficient wash and dry cycle 9-13
Clogged sample path 9-14
Blockage 9-14
Activating a vacuum cleaning cycle 9-15
Glass splinters 9-16

Maintenance **9-18**
Introduction 9-18
Daily maintenance 9-18
Liquid levels 9-18
Printer 9-19
Gas supply 9-19
External cleaning 9-20
Decontamination 9-21
Quality control 9-24
Weekly maintenance 9-25
pH-Reference electrode 9-25
Replace sample drip tray 9-26
Every 6 months 9-26
Measuring chamber valve 9-26
Annual maintenance 9-27
Sample drip tray 9-27
Fill port 9-27
Measuring chamber valve 9-27
Waste container 9-28
Rinse container 9-28
Tubing system 9-28
Vacuum pump head 9-29
Measuring chamber illumination 9-29
As needed 9-30
Pump head 9-30
Care and maintenance of electrodes 9-31
Cleaning 9-36
Measuring capillary 9-36

Care and maintenance of remembranable pH / Blood gas electrodes **9-37**
pH-Electrode 9-37
Replacement of the pH-Electrode housing 9-38
Cleaning the pH-Electrode 9-40
PCO_2-Electrode 9-42
Cleaning before replacing the housing 9-43
Cleaning of the glass tip 9-44
PO_2-Electrode 9-46
Cleaning 9-46
Replacing the membrane housing of PCO_2- and PO_2-Electrodes 9-48

9 Troubleshooting / Maintenance

Troubleshooting

Your AVL Compact is equipped with a variety of sensors which control the status of the analyzer.
Operator messages indicating detected system errors or malfunctions will be displayed and printed out.
All error messages are printed on the "Error Report". On this report max. 20 alarms can be listed.

Displayed and printed warning

NO Cleaning Solution ! (AVL Compact 2 and 3 only)

This warning indicates that the Cleaning solution container is empty. Check and replace the Cleaning solution - No system stop !

Displayed and printed alarms

There are two kinds of displayed alarms:

- before and during the "READY" mode,
- during a calibration, conditioning or measurement.

The displayed alarms are:

Electrode alarms

- pCO2 not calibrated !
- pO2 not calibrated !
- pH not calibrated !
- Check electrodes !

***NOTE**: Even if one or two of the electrodes are not calibrated, the analyzer will stay limited for the remaining parameter.*

VALUES		ALARMS			
	PRINTOUT	RANGE	REPRO	DRIFT	NO GAS
pH Buffer 1	pH B1	- 970 ...+ 2100	> ± 10 mV	> ± 0.024	- - - - -
pH Buffer 2	pH B2	- 1570 ...+ 1410	> ± 15 mV	- - - -	- - - - -
pH slope	pH slp	+430 ...+ 740	- - - - -	- - - - -	- - - - -
PCO_2 Gas1	PCO2 Gas 1	- 300 ...+ 1500	- - - - -	>3 mmHg (appr.-20mV)	Drift > 6 mmHg
PCO_2 Gas 2	PCO2 Gas 2	- 120 ...+ 1400	- - - - -	- - - - -	- - - - -
PCO_2 slope	PCO2 slp	+ 190 ...+ 286	- - - - -	- - - - -	- - - - -
PO_2 Gas 1	PO2 Gas 1	- 640 ... - 60	- - - - -	>5 mmHg	- - - - -
PO_2 Gas 2	PO2 Gas 2	- 71 ...+ 62	- - - - -	- - - - -	- - - - -
PO_2 slope	PO2 slp	+ 120 ... + 560	- - - - -	- - - - -	- - - - -

Liquid level alarms

- Check Waste !
- No Rinse ! (AVL Compact 2 and 3 only)
- No REF ! (AVL Compact 2 and 3 only)
- No KCl ! (AVL Compact 1 from SN 1000 on only)

Drift alarms

- No Gas ! (AVL Compact 1 only)
- No Gas 1 ! (AVL Compact 2 and 3 only)

Software detection (contact path)

- No Buffer 1 !
- No Buffer 2 ! (AVL Compact 2 and 3 only)
- No KCl ! (AVL Compact 1 up to SN 1000 only)
- Check Rinse Water ! (AVL Compact 1 only)

Various alarms

- Check MC temp. !
- Check SP temp. !
- Meas. path filled !
- Check meas. path.!
- CHECK K 0 ! (AVL Compact 2 from SN 1500 on and AVL Compact 3)
- No sample !
- Service alarms ! (AVL Compact 2 and 3 only)
- Check BARO ! (AVL Compact 2 and 3 only)
- No calibrator ! (AVL Compact 1 only)
- No zero solution ! (AVL Compact 1 only)
- No BP1303 ! (AVL Compact 1 only)

Alarm causes

- Main calibration has not been performed accordingly
- Low levels of pH-Reference solution, Buffer 1, Buffer 2 (AVL Compact 2 and 3 only) or RINSE
- Waste container full
- Low flow or low pressure of the external calibration gases
- No vacuum pressure for a wash and dry cycle
- Temperature of the sample inlet path is too high or too low
- Temperature of the measuring chamber is too high or too low
- Soiling

Error messages and instructions for elimination

The following tables contain all possible errors, causes and remedial action.

Error messages	Possible cause	Instructions for elimination
No Sample !	– No sample available.	– Insert new sample.
	– Capillary-fed sample less than 25 µl.	– Insert new sample (more than 25 µl). Activate „Micro sample“.
	– Sample transport error.	– Check pH-Reference electrode.
	– Sample path leaky.	– Check fill port (soiling, cuts, connection to sample inlet path). – Check wash nipple (soiling, setting, metal pipe). – Check alignment of flap. – Check sample inlet path (specially synthetic pipe). – Check quad ring of measuring chamber capillary. – Check outlet nipple of measuring chamber capillary. – Check O-rings at electrode tips and membrane of pH-Reference electrode. – Check membrane of measuring chamber valve. – Check function of V3 or V11, V5, V8, V9 and V2. – Check all accessible tubes (especially peristaltic pump tubing, tube to wash nipple and tubes at the valves V3 or V11, V5, V8, V9 and V2).
	– Wrong sample material.	– Insert new sample.
	– Peristaltic pump defective.	Check the following assembly groups and change if necessary: – Peristaltic pump – Valve V2 and V8 – Cable from assembly group to COBA Control Board – C2-Connector Board – COBA Control Board

Error messages	Possible cause	Instructions for elimination
No Buffer 1 ! No Buffer 2 ! (AVL Compact 2 and 3 only)	– Sample path leaky.	– Check fill port (soiling, cuts, connection to sample inlet path). – Check wash nipple (soiling, setting, metal pipe). – Check alignment of flap. – Check sample inlet path (specially synthetic pipe). – Check quad ring of measuring chamber capillary. – Check outlet nipple of measuring chamber capillary. – Check O-rings at electrode tips and membrane of pH-Reference electrode. – Check membrane of measuring chamber valve. – Check function of V3 or V11, V5, V8, V9 and V2. – Check all accessible tubes (especially peristaltic pump tubing, tube to wash nipple and tubes at the valves V3 or V11, V5, V8, V9 and V2).
	– No Buffer 1, Buffer 2 available.	– Replace Buffer 1, Buffer 2
	– Sample path clogged.	– See page 9-14
	– Peristaltic pump defective.	Check the following assembly groups and change if necessary: – Peristaltic pump – Valve V2 and V8 – Cable from assembly group to COBA Control Board – C2-Connector Board – COBA Control Board
	– Sample detection contact 1 faulty.	Check the following assembly groups and change if necessary: – Sample inlet path – Measuring chamber – Cable between assembly group and COBA Control Board – C2-Connector Board – COBA Control Board

Error Messages	Possible cause	Instructions for elimination
Check meas. path !	– Vacuum system leaky – Back pressure valve of external Waste container leaky. – Sample path clogged. – Vacuum pump defective.	– Screw on cap of Waste container tight. – Check back pressure valve. – See page 9-14 – Activate: Maintenance - Wash or – Maintenance - Vac. Cleaning Check the following assembly groups and change if necessary: – Vacuum pump – Cable from assembly group to COBA Control Board – C2-Connector Board – COBA Control Board
No Gas ! (AVL Compact 1 only) No Gas 1 ! (AVL Compact 2 and 3 only)	– Gas cylinder empty. – Gas path leaky. – Gas cylinder valve closed. – PCO_2-Electrode defective.	– Check gas pressure. If necessary, replace gas cylinder. – Check gas supply and sample path for leaks. – Open gas cylinder valve. – Check PCO_2-Electrode.
Check Waste !	– Dispose or empty the bottle.	– Reinstall and insure the is seal tight. Press YES to confirm Waste empty ?
Check Cleaning Solution! (AVL Compact 2 and 3 only) No BP1303 ! (AVL Compact 1 only)	– Bottle empty. – pH-Reference electrode empty / check sample path for leaks / sample path clogged. – No Cleaning solution aspirated. – pH-Reference electrode empty / check sample path for leaks / sample path clogged.	– Reinstall and insure the seal tight. – Check pH-Reference electrode and sample path for tightness. – Check pH-Reference electrode and sample path for tightness.

Error Messages	Possible cause	Instructions for elimination
No REF ! (AVL Compact 2 and 3 only) No KCl ! (AVL Compact 1 only)	– Bottle empty.	– Reinstall and insure the seal tight Confirm Fill electrode ? by pressing YES. This function activates the automatic filling of the pH-Reference electrode housing
	– Bottle of the pH-Reference electrode leaky.	– Screw on cap of the bottle tight.
No RINSE ! (AVL Compact 2 and 3 only)	– Bottle empty.	– Replace by just filled RINSE bottle or empty bottle completely. Refill with distilled water and add one ampoule Rinse Additive. A wash / dry cycle will be automatically performed.
Check Rinse Water ! (AVL Compact 1 only)	– Bottle empty.	– Replace by just filled Rinse bottle or empty bottle completely ! Refill with distilled water and add one ampule Rinse Additive. Activate: User programs – Maintenance – Wash.
No calibrator ! (AVL Compact 1 only)	– Ampoule empty.	– Check sample path for leaks. – Check pH-Reference electrode. – Repeat input of BG calibrator.
No zero solution ! (AVL Compact 1 only)	– Bottle empty.	– Check sample path for leaks. – Check pH-Reference electrode. – Repeat input of Zero solution.

Error Messages	Possible cause	Instructions for elimination
Meas. path filled !	– Measuring chamber soiled. – Vacuum system leaky. – Back pressure valve of external Waste container leaky. – Sample path clogged. – Vacuum pump defective.	– Clean measuring chamber. – Screw on cap of Waste container tight. – Check back pressure valve. – See page 9-14 – Activate Maintenance - Wash or Maintenance - Vac. cleaning Check the following assembly groups and change if necessary: – Vacuum pump – Cable from assembly group to COBA Control Board – C2-Connector Board – COBA Control Board
Check MC-Temperature !	– Measuring chamber temperature too high because of excessive ambient temperature. – Measuring chamber temperature in excess or insufficient because of thermostat failure.	– Switch off the analyzer – Check ambient temperature (15 ... 32 °C / 59.0 ... 89.6 °F) – Check measuring chamber cables and plug Check the following assembly groups and change if necessary: – Measuring chamber – C2-Connector Board – COBA Control Board
Check SP - temperature !	– Sample inlet path temperature too high because of excessive ambient temperature. – Sample inlet path temperature in excess or insufficient because of thermostat failure.	– Switch off analyzer. – Check ambient temperature (15 ... 32 °C / 59,0 ... 89.6 °F) – Check sample inlet path cables and plug Check the following assembly groups and change if necessary: – Sample inlet path – C2-Connector Board – COBA Control Board

Error Messages	Possible cause	Instructions for elimination
Check electrodes !		– Print out a calibration report and check status of the analyzer. Check sample path for leaks and clots. Activate User programs - Maintenance -Wash – Change electrodes – Perform the corresponding calibration
pH	– Voltage too high /too low.	– Check pH-Reference electrode.
	– Excessive / insufficient slope.	– Replace pH-Electrode. – Perform QC measurement. – Repeat measurement. – Check measurement path with electrode simulator (see chapter 8) and change COBA Control Board, if necessary.
	– pH-Electrode plug disconnected.	– Connect plug.
	– pH-Reference solution.	– Check pH-Reference solution cap for leaky. Screw cap on tight. – Check measurement path with electrode simulator (see chapter 8) and change COBA Control Board, if necessary.
	– Blockage in pH-Reference electrode housing.	– Replace pH-Reference electrode housing (see section "Maintenance").
	– pH-Reference Electrode housing not full.	– Fill up housing with pH-Reference Solution (see section "Maintenance").
	– pH-electrode soiled.	– Clean (see section, "Care and maintenance of remembranable pH / blood gas electrodes") or replace electrode.

Error Messages	Possible cause	Instructions for elimination
pH	– Measuring chamber temperature.	– Switch off analyzer. – Check ambient temperature (15 ... 32 °C / 59,0 ... 89.6 °F) – Check measuring chamber cables and plug Check the following assembly groups and change if necessary: – Measuring chamber – C2-Connector Board – COBA Control Board
	– Buffer 1 / Buffer 2 contaminated with micro-organism (wrong pH-value !).	– Replace Buffer 1 / Buffer 2 and run a 2P calibration. – Replace Buffer 1 / Buffer 2 (AVL Compact 2 and 3 only), run a cleaning cycle with Deproteinizer. Rinse the tubes with distilled water for several times, install new Buffer 1 / Buffer 2 bottle and rinse the tubes with the new Buffer 1 / Buffer 2 for several times. – Perform a main calibration.
	– Tightness of flap.	– Check fill port. Check wash nipple.
	– Measuring chamber valve.	– Check seal adapter.
	– Electrode position.	– Check electrode support.

Error Messages	Possible cause	Instructions for elimination
***P*CO$_2$**	– Voltage too high /too low.	– Replace *P*CO$_2$-Electrode. – Perform QC measurement.
	– Excessive / insufficient slope. – Excessive electrode drift.	– Repeat measurement. – Check measurement path with electrode simulator (see chapter 8) and change COBA Control Board, if necessary.
	– *P*CO$_2$-Electrode plug disconnected.	– Connect plug.
	– *P*CO$_2$-Electrode	– Replace electrode housing or electrode.
	– Gas bottle exchanged.	– Check gas supply and tubing Connect properly.
	– Leaks	– Activate `System Test - Electrodes - Gas 1/Gas 2 internal` – On the left side of the measuring chamber, place a tube reaching into a cup of water and check the water for continuous gas flow. If gas flow is not continuous, the gas valve does not close. – Check quad-ring between preheating tube and measuring chamber. Check the following assembly groups and change if necessary: – Gas cylinder – Pressure regulator – Gas tubing – Gas valve
	– Tightness of the flap.	– Check fill port. – Check wash nipple.
	– Measuring chamber valve	– Check seal adapter.
	– Electrode position	– Check electrode support.

Error Messages	Possible cause	Instructions for elimination
***PO*$_2$**	– Voltage too high /too low.	– Replace *P*O$_2$-Electrode. – Perform QC measurement.
	– Excessive / insufficient slope.	– Repeat measurement.
	– Excessive electrode drift.	– Check measurement path with electrode simulator (see chapter 8) and change COBA Control Board, if necessary.
	– *P*O$_2$-Electrode plug disconnected.	– Connect plug
	– *P*O$_2$-Electrode	– Replace electrode housing or electrode.
	– Gas bottle exchanged.	– Check gas supply and tubing Connect properly.
	– Leaks	– Activate `System Test - Electrodes - Gas 1/Gas 2 internal` – On the left side of the measuring chamber, place a tube reaching into a cup of water and check the water for continuous gas flow. If gas flow is not continuous, the gas valve does not close. – Check quad-ring between preheating tube and measuring chamber. Check the following assembly groups and change if necessary: – Gas cylinder – Pressure regulator – Gas tubing – Gas valve
	– Tightness of the flap.	– Check fill port. – Check wash nipple.
	– Measuring chamber valve	– Check seal adapter.
	– Electrode position	– Check electrode support.

Error Messages	Possible cause	Instructions for elimination
CHECK K 0 ! (AVL Compact 2 from SN 1500 on and AVL Compact 3)	– Sample inlet path soiled.	
	– Measuring chamber soiled.	– Clean measuring chamber.
	– Vacuum system leaky.	– Screw on cap of Waste container tight.
	– Back pressure valve of external Waste container leaky.	– Check back pressure valve.
	– Sample path clogged.	– See page 9-14 – Activate Maintenance - Wash or – Maintenance - Vac. Cleaning
	– Vacuum pump defective.	Check the following assembly groups and change if necessary: – Vacuum pump – Cable from assembly group to COBA Control Board – C2-Connector Board – COBA Control Board
Service alarms ! (AVL Compact 2 and 3 only)	– Calibration can not be performed because of alarm(s).	– Remove cause of alarms Activate calibration.
Check BARO ! (AVL Compact 2 and 3 only)	– Characteristic value of Baro is out of range.	Check the following assembly groups and change if necessary: – Baro sensor – COBA Control Board

Insufficient wash and dry cycle

Possible cause	Remedy
Insufficient drying of measuring chamber.	– Extend drying by 10 seconds, see Operator's Manual, Chapter 8, page 8-7.
Insufficient wetting through use of abrasive cleaning agents (too much deproteinizer).	– Perform two blood or serum measurements.
Vacuum system leaky.	– Check Waste container cap for tight seal. – Check quad ring of the Waste cap. – Check all accessible tubes.
Back pressure valve of external Waste container leaky.	– Check back pressure valve.
Sample path clogged.	– See page 9-14.
Vacuum pump defective.	Check the following assembly groups and change if necessary: – Vacuum pump – Cable from assembly group to COBA Control Board – C2-Connector Board – COBA Control Board

Clogged sample path

Blockage

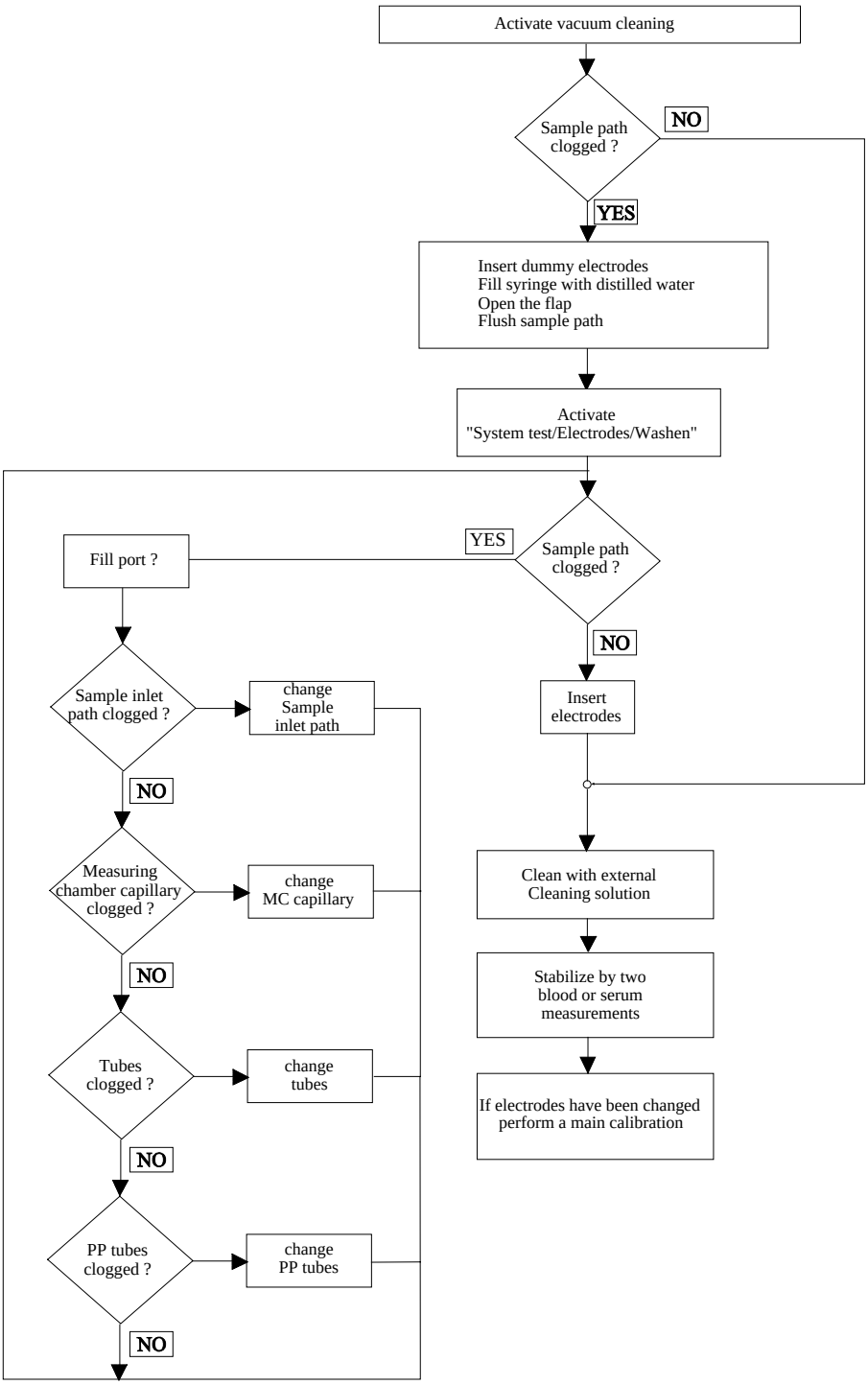

NOTE: *To protect against spillage, protective glasses should be worn when attempting to flush a blockage in the sample path with a syringe injection !*

Activating a vacuum cleaning cycle

If the sample path or the measuring chamber are clogged, activate a vacuum cleaning cycle.

Activate:

Maintenance? YES 3x ▽

Vacuum cleaning? YES

```
USER PROGRAMS
Vacuum cleaning
Please wait
```

At this point, a vacuum cleaning cycle of the sample path and the measuring chamber is performed.
On completion of the cycle the following display will appear:

```
USER PROGRAMS
Maintenance

Vacuum cleaning ?
```

Press YES to repeat the process.

Exit this program by pressing ESC .

Glass splinters

NOTE: *Risk of contamination !*
Under any circumstances wear protective gloves !

Should the sample path contain splinters from a broken capillary, remove them as follows:

Open the cover of the analyzer.

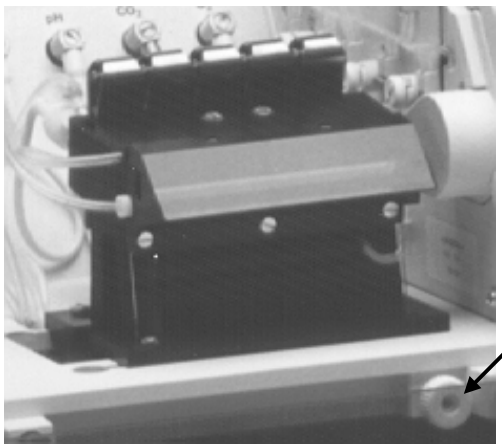

1. Loosen the knob that secures the measuring chamber.
2. Move the measuring chamber block carefully all the way to the left.

Fig. 9-1: Glass splinters (1)

Put a cellulose tissue at the outlet of the preheating tube.
Pump the piston of a syringe filled with water to flush the fill tube.

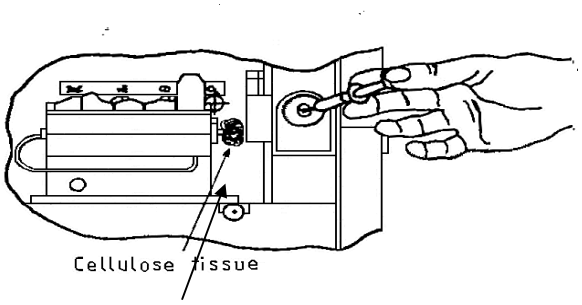

Fig. 9-2: Glass splinters (2)

If this does not help, use an appropriate sized stylette to push the splinters through the pre-induction tube.

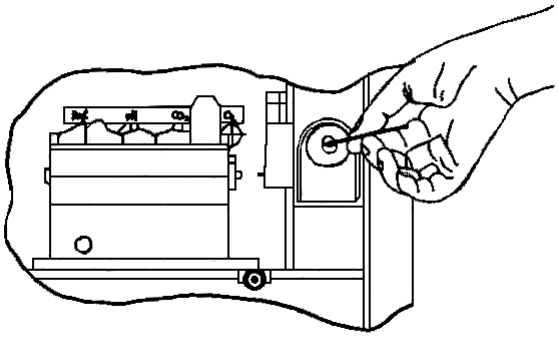

Fig. 9-3: Glass splinters (3)

If it was possible to remove the glass splinters, loosen fixing knob (**1**.), move the measuring chamber block carefully to the right (**2.**) so that it docks with the preheating tube. When it fits tightly with the preheating tube, secure the measuring chamber by pushing the knob to the correct position.

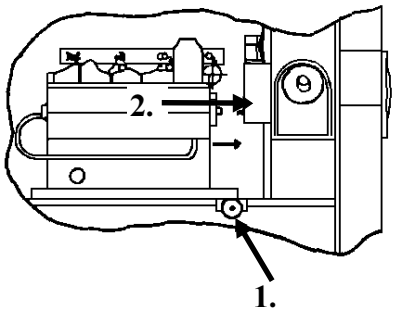

Fig. 9-4: Glass splinters (4)

***NOTE**: Make sure that the quad-ring between the measuring chamber and the preheating tube is in correct place to allow for a trouble-free operation cycle.*

Maintenance

Introduction

This chapter describes regular maintenance, which helps to assure the liability and measurement quality of the analyzer.
The following maintenance should be performed at the specified intervals.
If needed, maintenance can be performed between recommended periods.

***NOTE**: AVL zero-maintenance electrodes should not be removed for periodic checks. Removal and reinsertion may cause damage.*

Daily maintenance

Liquid levels

Check level and expiration date:

- **RINSE**
- **Buffer 1**
- **Buffer 2** (AVL Compact 2 and 3 only)
- **pH Reference solution**
- **Cleaning solution** (AVL Compact 2 and 3 only)

***NOTE**: Never refill RINSE, Buffer 1, Buffer 2, Cleaning solution and pH-Reference solution bottle, always replace.
Contamination could occur.*

***NOTE**: If you do not use the prefilled RINSE solution, refill with distilled water only and add one ampoule of Rinse Additive.
If the liquid level is too low (less than 1 cm), the measuring chamber can become soiled and this lead to incorrect measuring values.*

Waste container

Dispose or empty and decontaminate the container.

***NOTE**: The Waste container contains biohazardous substances. Waste liquids should be capped and disposed of according to local regulations.*

Printer

Paper: check quantity and replace if necessary.

NOTE: *The paper is heat-sensitive* ***on one side only****. Please insert correctly !*

1. Push the paper roll holder slightly to the side and
2. insert a new paper roll.
3. Insert the paper in the feeder.
4. Press the paper feed button, until the paper appears at the outside of the cover.

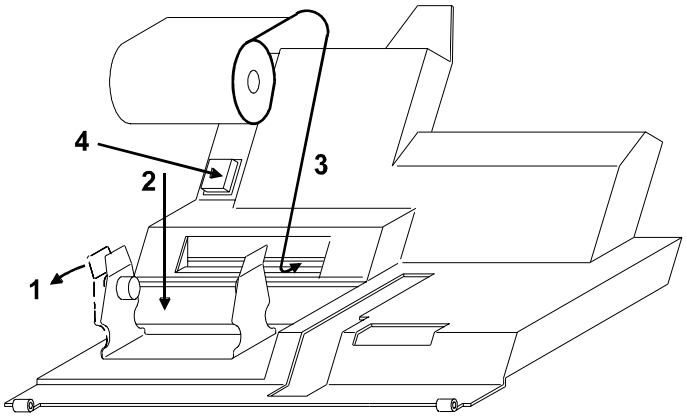

Fig. 9-5: Insert printer paper

Gas supply

Check primary pressure of the precision gas cylinder (min. 10 bar or 150 psi). Replace the gas cylinder if primary pressure is too low.
Check secondary pressure of the precision gas cylinder (min 3 - 4 bar or 45 - 60 psi).
When the primary calibration gas pressure drops to 10 bar (150 psi), the cylinder needs to be replaced.

NOTE: *To guarantee the specification it is required to use AVL precision gases.*

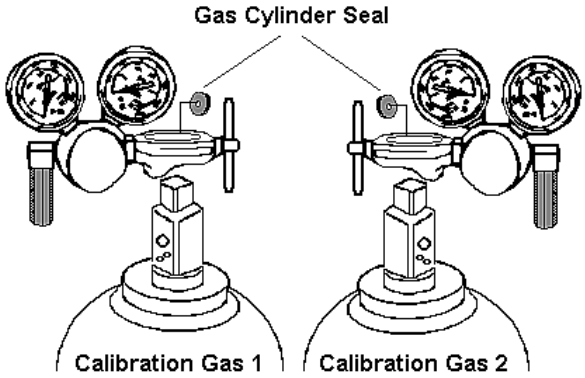

Fig. 9-6: Position of calibration gas cylinder (AVL Compact 2 and 3)

Connect the gas supply as follows:

1. Disconnect the tubes.
2. Empty the cylinder completely.
3. Release the clasps of the pressure regulator and take off the cylinder.
4. Take the empty cylinder out of its holder.
5. Dispose of the empty gas cylinder in accordance with local regulations.
6. Install the pressure regulators on the new gas cylinders.
7. Insert the new cylinders in the holders and secure them.
8. Open the valves of the new gas cylinders and purge tubes for some seconds with gas.
9. Close the valves again.
10. Connect the tubes to the connector nipples on the rear panel of the AVL Compact.
11. Open the valves of the gas cylinders again.

***NOTE**: Do not mix up bottles and tubes.*

External cleaning

Analyzer

Clean analyzer surface with a mild soap solution, if necessary.
Do not use strong polishing material.

Fill port

If soiled, the fill port must be cleaned with a moist cotton swab.

***NOTE**: The user program "Systemtest" and "Electrodes" for example, must be activated before performing the cleaning cycle so that the analyzer will not detect a measurement (sample) when the flap is opened. This program can only be terminated by pressing* ESC *and does not have a timeout function.*

Decontamination

AVL recommends the following decontamination procedures. Decontamination should be performed in accordance with typical laboratory regulations.
This decontamination should be performed periodically to minimize the risk of infections (incl. hepatitis virus and HIV).
The purpose of this procedure is to minimize the risk when replacing items that were in direct contact with blood.

***NOTE**: Always used approved, protective gloves !*

The following parts of the device have to be decontaminated:

Daily

- Fill port area
- Keyboard
- Surfaces

As needed

- Sample path

Reagents

***NOTE:** Use liquid disinfectants only.*
Do not use sprays !

AVL Deproteinizer

Composition

Aqueous solution of NaOCl containing 2% active chlorine.

Hazards identification

Due to the basic and oxidizing character of the reagent ("Deproteinizer") local irritations after contact with eyes, skin or mucous membranes cannot be excluded.

First aid measures

After inhalation:	fresh air, drink plenty of water
After skin contact:	rinse with plenty of water, remove contaminated clothes
After eye contact:	rinse with plenty of water, consult a doctor
If swallowed:	drink plenty of water, avoid vomiting, consult a doctor

***NOTE:** When Deproteinizer is handled and used properly, no ecological problems are to be expected.*

Disinfectant

A commercially available alcoholic disinfectant containing aldehyde should be used (e.g.: Meliseptol). Please refer to the product description of the surface disinfectant.

NOTE: *Do not use the disinfectant for internal decontamination of the sample path !*

Fill port area

For decontamination AVL Deproteinizer is especially recommended.
You may also use a commercially available alcoholic disinfectant containing aldehyde.

Sample drip tray

The sample drip tray prevents contamination of the bottle compartment (in case of improper sample introduction). Decontaminate a dirty sample drip tray with a cloth or gauze pad saturated in disinfectant.

Procedure:

1. Open bottle compartment cover.
2. Pull sample drip tray out.
3. Clean and decontaminate or replace it.
4. Close bottle compartment cover.

Fill port

Decontaminate fill port with a cloth or gauze pad saturated in disinfectant.

Procedure:

1. Activate:

   User programs ? [YES] 6x [∨]

   System test ? [YES]

   Electrodes ? [YES]

2. Open flap.
3. Decontaminate fill port.
4. Close flap.
5. Press the key [ESC] twice upon completion of this maintenance procedure.

The system performs a washing/drying procedure and will return to the "READY" screen.

Flap

Decontaminate the inside and outside of the flap with a cloth or gauze pad saturated in disinfectant.

Procedure:

1. Activate:

   User programs ? [YES] 6x [∨]

   System test ? [YES]

   Electrodes ? [YES]

2. Open flap.
3. Decontaminate the inside and outside of the flap and wait until disinfectant has dried.
4. Close flap only after disinfectant has dried completely to avoid damaging the lacquer when reopening the flap.
5. Press the key [ESC] twice upon completion of this maintenance procedure.

The system performs a washing/drying procedure and will return to the "READY" screen.

Keyboard

Decontaminate the keyboard with a cloth or gauze pad saturated in disinfectant.

***NOTE**:* *Decontaminate with damp cloth only using a disinfectant. Do not use sprays !*

Surfaces

Decontaminate all outside surfaces and cover with a cloth or gauze pad saturated in disinfectant.

Sample path / Measuring chamber

Cleaning with AVL Deproteinizer should be performed only when the measuring capillary is contaminated (protein residue) or if components of the measuring path are being replaced.
Such cleaning process basically interferes with the measuring system and the electrodes. They must be conditioned afterwards.
The decontamination agent is introduced via the fill port.

If necessary decontaminate the measuring chamber specially the connecting pieces with a cloth saturated in disinfectant.

Procedure:

Activate:

User programs ? YES 3x ▽

Maintenance ? YES 2x ▽

Cleaning ? YES

Perform cleaning according instructions on the display.

***NOTE**: After reinstalling of the decontaminated electrodes at a later time or a new electrode perform two measurements with a wetting agent (e.g. whole blood) to moisten the system.*

Quality control

Perform at least one daily quality control with recommended AVL control material in accordance with your current laboratory regulations.

Weekly maintenance

In addition to the daily maintenance procedures, the following procedures should be performed weekly.

pH-Reference electrode

The permeability of the pH-Reference electrode diaphragm can be tested by touching the electrode tip with a clean dry tissue.

Activate:

Maintenance? YES

Ref. electrode? YES

Fill electrode? ⌄

```
USER PROGRAMS
Ref. electrode

Check permeability ?
```

Press YES .

Check whether a small droplet of pH-Reference solution forms at the electrode tip.

If no droplet is visible, repeat this procedure.

If again no droplet is visible, replace the pH-Reference electrode housing.

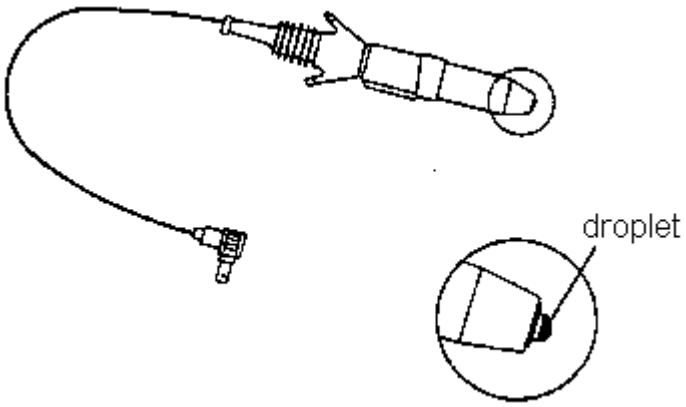

Fig. 9-7: pH-Reference electrode

If the droplet has formed, wipe it off carefully, insert the electrode into the measuring chamber and secure the electrode with the clip.

Exit this program by pressing ESC .

Replace sample drip tray

Remove old drip tray and insert new one.

NOTE: *Risk of contamination !*
Under any circumstances wear protective gloves !
Dispose the sample drip tray according to local regulations.

Every 6 months

In addition to the daily and weekly maintenance procedures, the following procedures should be performed every 6 month.

Measuring chamber valve

The measuring chamber valve (electromagnetic valve) is located at the far right in the measuring chamber block.
It separates the measuring chamber unit from the sample path, so that syringe samples are not directly inserted in the measuring chamber, but in the bypass.

Procedure

1. Pull out the securing clip of the valve and remove the measuring chamber valve from the measuring chamber.
2. A cover with a silicone O-ring is located at the tip of the valve.
3. Remove the cover from the valve.
4. Place a new cover on the valve. Be careful that the silicone O-ring is not pushed out at the front.
5. Return the measuring chamber valve into the measuring chamber and secure with clip.
6. Close the cover.

Annual maintenance

In addition to the daily,weekly and monthly maintenance procedures, the following procedures should be performed every year.

NOTE: *For the annual maintenance, a PM Kit is available, which contains all tubing sets and replacement parts.*

Sample drip tray

Remove old sample drip tray and insert new one.

Dispose the sample drip tray according to local regulations.
Insert new sample drip tray.

NOTE: *The sample drip tray should also be exchanged during weekly maintenance.*
Risk of contamination !
Under any circumstances wear protective gloves !

Fill port

NOTE: *The user program "System test" and "Electrodes" for example, must be activated before performing the cleaning cycle so that the analyzer will not detect a measurement (sample) when the flap is opened. This program can only be terminated by pressing* ESC *and does not have a timeout function.*

Procedure

1. Open the flap of the AVL Compact.
2. Grasp the fill port at the lower edge and pull it out.
3. Moisten the new fill port with distilled water and press it carefully into its place.
4. Close the flap.

Press ESC as often as necessary to get READY.

NOTE*: Risk of contamination !*
Under any circumstances wear protective gloves !

Measuring chamber valve

Procedure

1. Pull out the securing clip of the valve and remove the measuring chamber valve from the measuring chamber.
2. A cover with a silicone O-ring is located at the tip of the valve.
3. Remove the cover from the valve.
4. Place a new cover on the valve. Be careful that the silicone O-ring is not pushed out at the front.
5. Return the measuring chamber valve into the measuring chamber and secure with clip.
6. Close the cover.

NOTE: *Themeasuring chamber valve should also be exchanged every 6 month.*

Waste container

Dispose the Waste container according to local regulations.
Insert new Waste container.

NOTE: *Risk of contamination !*
Under any circumstances wear protective gloves !

Rinse container

Dispose the Rinse container according to local regulations.
Insert new Rinse container.

Tubing system

Replace tubing sets, tubes, T-piece, nipples and quad-rings.

- **Peristaltic pump tube**

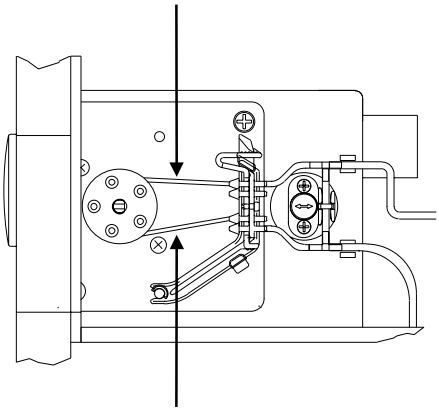

Fig. 9-8: Peristaltic pump tube

Procedure

1. Unlock tension lever and disconnect pump tube.
2. Press tension lever against pump plate and pull the tube plate out of tension lever.
3. Place the new tube around the pump head and press the tube plate into tension lever until it locks.
4. Push end of tension lever to the right and slightly against the pump plate until it locks with a click.

NOTE: *Take care that the pump tubes are not overstretched.*
Risk of material damage !

- **Tubing set 1**
- **Tubing set 2**
- **Tubing set 3 (AVL COMPACT 2 and 3)**
- **Tubing set – Fill port module**
- **Tubing AVL COMPACT 1**
- **quad ring seal for pH-Reference Solution bottle (28.17 x 3.53 mm)**
- **quad ring seal for measuring chamber (1.06 x 1.25 mm)**
- **quad ring seal for waste (50.4 x 3.53 mm)**
- **KCl-trap**

Vacuum pump head

1. Remove the rear wall off the AVL Compact.
2. Open COBA Control Board.
3. Pull off the tubes from the vacuum pump.
4. Open the four screws at the vacuum pump head.
5. Pull off the pump head.
6. Insert new vacuum pump head.

Measuring chamber illumination

1. Pull out the locking knob (see Fig. 9-1) until resistance is felt.
2. Push the block to the left and remove in upward direction.
3. Push the lamp holder lock down and pull the lamp holder out of the measuring chamber.
4. Remove the 28 V lamp from the lamp holder and replace, if necessary.

As needed

Pump head

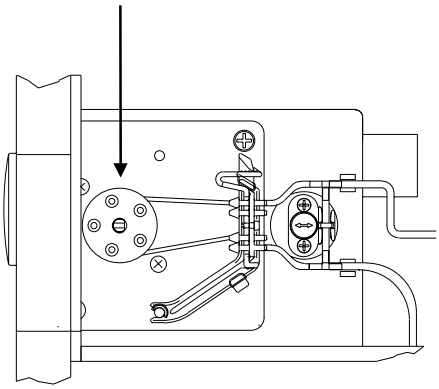

Fig. 9-9: Pump head

Procedure

1. Unlock tension lever and disconnect pump tube.
2. Press tension lever against pump plate and pull the tube plate out of tension lever.
3. Pull pump head off and remove clip from motorshaft if necessary.
4. Position spoolhole on motorshaft and turn pump head until flat sides match.
5. Push pump head all the way up the shaft to the pump plate (do not hold shaft).
6. Place the tube around the pump head and press the tube plate into tension lever until it locks.
7. Push end of tension lever to the right and slightly against the pump plate until it locks with a click.

***NOTE**: Take care that the pump tubes are not overstretched.*
Risk of material damage !

Care and maintenance of electrodes

This section describes the care and maintenance required for optimal electrode performance.
Electrode performance is the most important factor influencing the quality of analytical results. Proper care and maintenance is required at regular intervals.

NOTE: *No electrodes should be removed during calibration or measurement Please wait until the process has been completed. Maintenance is only necessary when an alarm occurs. Before beginning with maintenance, the user program "Systemtest" and "Electrodes" for example, must be activated. This program can only be terminated by pressing* ESC *and does not have a timeout function.*

NOTE*: Before performing electrode maintenance disconnect the electrode cable and remove the electrode clip. Handle the electrodes with care ensuring that electrode tips do not contact any hard surface.*

pH / Blood gas electrodes

Zero maintenance pH / Blood gas electrodes

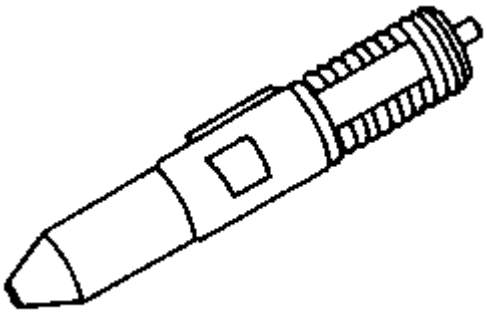

Fig. 9-10: Zero maintenance pH / Blood gas electrodes

The upkeep of the Zero maintenance pH / Blood gas electrodes is limited to regular checks of electrode voltages and the occasional replacement of an electrode whose service life has expired. See attached pages for Zero maintenance pH / Blood gas electrode information (see page 9-37).

NOTE*: Zero maintenance pH / Blood gas electrodes do not require any maintenance !*

pH-Reference electrode

The pH-Reference electrode is located on the extreme left hand side of the measuring chamber.
To perform maintenance procedures on the pH-Reference electrode, do not interrupt calibration procedures or measurements and leave the analyzer switched on.
Remove the pH-Reference electrode from the measuring chamber block and hold the electrode with the tip downwards. Do not disconnect the tubes.

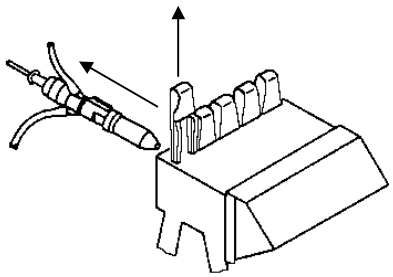

Fig. 9-11: pH-Reference Electrode (1)

- Filling of the pH-Reference electrode

If the reference solution in the pH-Reference electrode housing is low, activate:

Maintenance? YES

Ref. Electrode? YES

```
USER PROGRAMS
Ref. electrode

Fill electrode ?
```

Press YES.

This function activates the automatic filling procedure of the pH-Reference electrode housing.
On completion of the filling, the following display appears:

```
USER PROGRAMS
Ref. electrode

Fill electrode ?
```

Press ✓ when the electrode is filled.

- Check Permeability of the pH-Reference electrode

The permeability of the pH-Reference electrode diaphragm should be tested. Carefully touch the electrode tip with a clean dry tissue.

```
USER PROGRAMS
Ref. electrode

Check permeability ?
```

Press YES .

Check whether a small droplet of pH-Reference solution forms at the electrode tip.
If no droplet is visible, repeat this procedure.
If again no droplet is visible, replace the pH-Reference electrode housing.

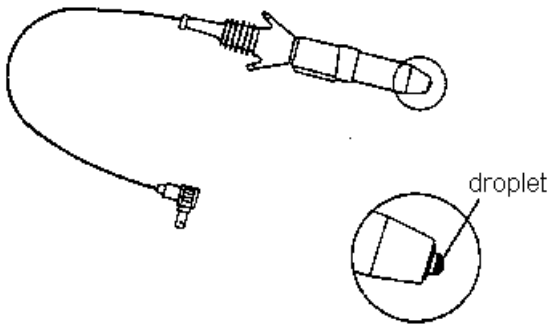

Fig. 9-12: pH-Reference electrode (2)

If the droplet was formed, reinstall the pH-Reference electrode in the measuring chamber block and secure with the clip.

Exit this program by pressing ESC .

- Replacing the pH-Reference electrode housing

Leave the analyzer switched on. Do not interrupt a calibration or a measurement.
Remove the pH-Reference electrode clip leaving the electrode cable and reference solution tubes attached (see Fig.: 9-8).

***NOTE**: Use gloves while removing the pH-Reference electrode housing.*

Carefully remove the pH-Reference electrode housing catching any slight spillage of solution in a tissue. Dispose of the old electrode housing according to applicable safety regulations or procedures.

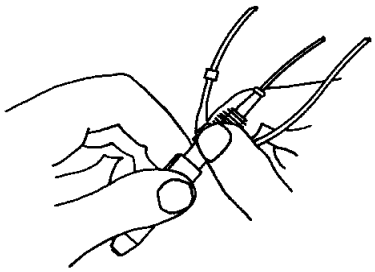

Fig. 9-13: Remove pH-Reference electrode housing

Replace the electrode O-ring if necessary (e.g. if brittle, or worn).

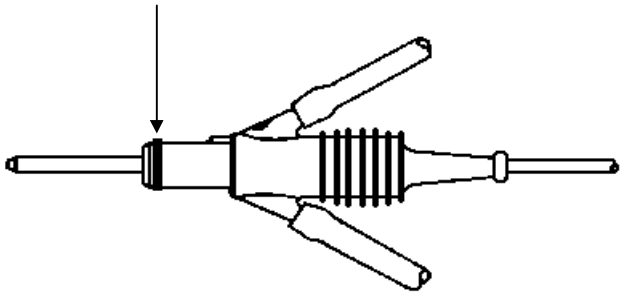

Fig. 9-14: O-Ring (pH-Reference electrode)

Remove plastic protection cover and install a new pH-Reference electrode housing.

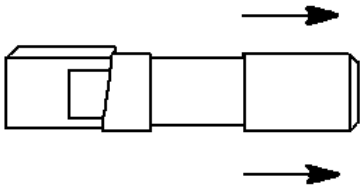

Fig. 9-15: pH-Reference electrode housing

Activate the automatic filling function

User programs?	YES 3x ▽
Maintenance?	YES
Ref. electrode?	YES
Fill electrode?	YES

to fill the new pH-Reference electrode housing and remove air bubbles.

Remembranable pH / Blood gas electrodes

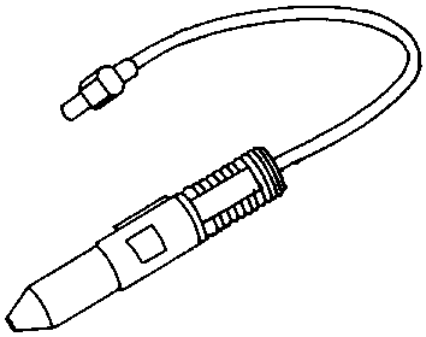

Fig. 9-16: Remembranable pH / Blood gas electrode

This electrodes require periodical checks and maintenance like replacement of electrode housing and cleaning.

***NOTE**: The user program "Systemtest" and "Electrodes" for example, must be activated before performing the cleaning cycle so that the analyzer will not detect a measurement (sample) when the flap is opened. This program can only be terminated by pressing* ESC *and does not have a timeout function.*

- Check electrolyte levels of remembranable PCO_2- and PO_2-Electrodes

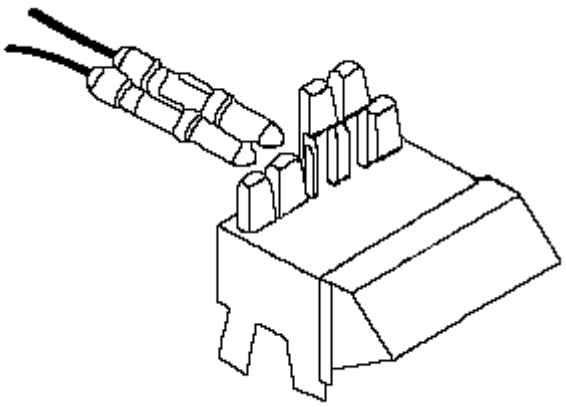

Fig. 9-17: Electrode check (1) - PCO_2- / PO_2-Electrode

Remove the electrodes from the measuring chamber block by lifting the corresponding clips and carefully pulling the electrodes towards the rear.

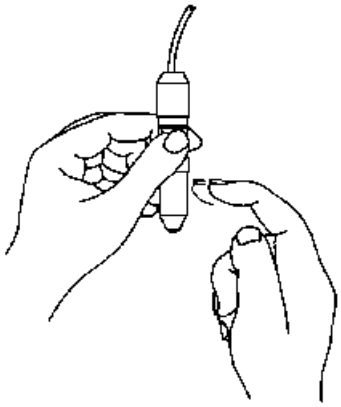

Fig. 9-18: Electrode check (2) - PCO_2- / PO_2-Electrode

Hold the electrode with the tip downwards. Gently tap it with your finger. If no electrolyte solution is visible regenerate the electrode according to the instructions respectively.

If electrolyte solution is visible, reinstall electrode in its position in the measuring chamber block and secure with the clip.

For details, please refer to section "Care and maintenance of remembranable pH / Blood gas electrodes".

Cleaning

***NOTE**: The user program "System test" and "Electrodes" for example, must be activated before performing the cleaning cycle so that the analyzer will not detect a measurement (sample) when the flap is opened. This program can only be terminated by pressing* [ESC] *and does not have a timeout function.*

Measuring capillary

If the measuring capillary is heavily soiled, the user has to insert AVL Cleaning solution like a sample into the fill port once a week.

Activate:

User programs? [YES] 3x [∨]

Maintenance? [YES] 2x [∨]

Cleaning? [YES]

Perform the cleaning procedure according to the displayed instructions.

Care and maintenance of remembranable pH / Blood gas electrodes

In the following section the maintenance procedures for the different types of electrodes (pH, PCO_2, PO_2) are described.

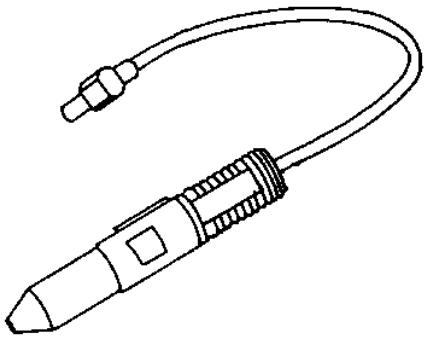

Fig. 9-19: Remembranable pH / Blood gas electrode

pH-Electrode

The pH-Electrode consists of the inner electrode and the housing and is marked with a gray grip. The pH-Electrode requires only little maintenance.
To perform maintenance of the pH-Electrode, do not interrupt a calibration or measurement.

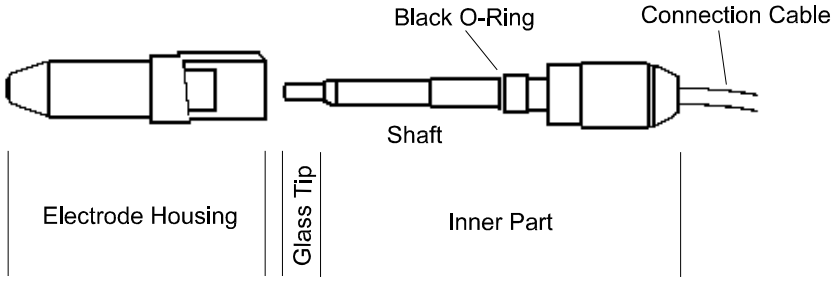

Fig. 9-20: pH-Electrode

Replacement of the pH-Electrode housing

In case of a pH-Electrode alarm or an other pH-Electrode related problem remove the pH-Electrode clip and take the electrode out of the measuring chamber block, by pulling it towards in rear.

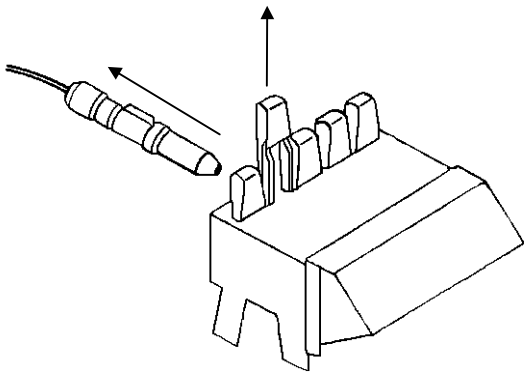

Fig. 9-21: Pull out the pH-Electrode

Carefully remove the pH-Electrode housing.
Dispose of the electrode housing according to applicable safety regulations or procedures.

Fig. 9-22: Remove pH-Electrode housing

Replace the inner electrode O-ring if necessary (e.g. if brittle, or worn).

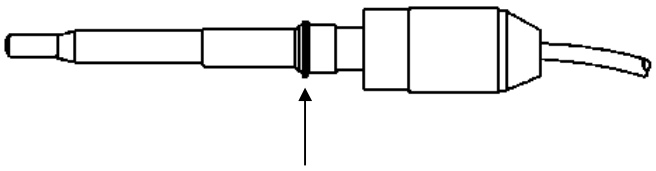

Fig. 9-23: Inner Electrode - O-Ring

Fix new pH-Electrode housing.

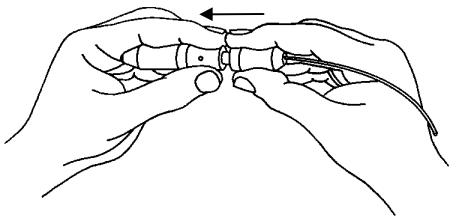

Fig. 9-24: pH-Electrode - fix new housing (1)

***NOTE**: Press forefinger against the tip of the housing to avoid forcing out the O-ring at the tip.*

Without releasing the pressure, rotate the inner section one quarter turn in both directions.

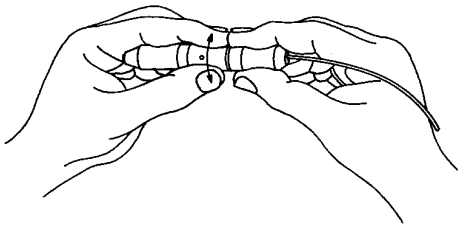

Fig. 9-25: pH-Electrode - fix new housing (2)

***NOTE:** This procedure avoids, that the inner part is pushed back out of the housing after it is released (due to the elasticity of the O-ring).*

Reinstall the pH-Electrode in the measuring chamber block and reconnect the electrode cable and electrode clip.
Close the cover.
Initiate the corresponding calibration.

***NOTE**: Should the pH-Electrode (complete or inner element only) be exposed to air for more than two hours, place it in a small cup filled with Buffer 1. Immerse the top approx. 5 mm in this solution for 12 hours before reinstalling the electrode in the measuring chamber.*
Place a soft cloth at the bottom of the glass cup in which the pH electrode or its inner part is stored.

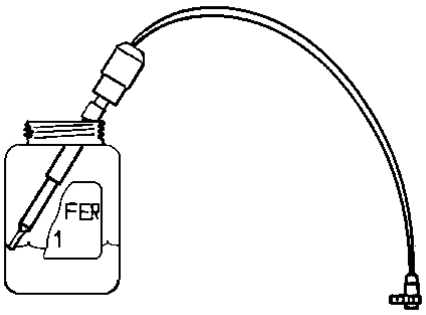

Fig. 9-26: pH-Electrode - immerse into Buffer 1

Cleaning the pH-Electrode

***NOTE**: This cleaning should be performed only in case of heavy soiling of the electrode tip. This procedure should be carried out no more than two or three times a year.*

Carefully remove the pH-Electrode as described before.
Remove and dispose of the electrode housing according to applicable safety regulations or procedures.
Replace the electrode O-ring if necessary (e.g. if brittle, or worn).
Moisten the chamois leather of the electrode cleaning box with a few drops of distilled water.
Squeeze a small amount of electrode cleaning paste onto the moistened chamois leather.

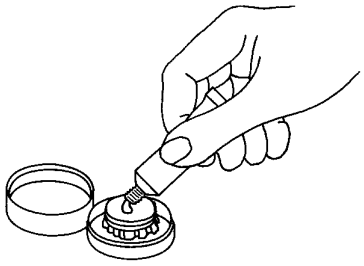

Fig. 9-27: pH-Electrode - cleaning procedure (1)

Hold the electrode vertically between thumb and forefinger and polish it in circular movements with the chamois leather for about 15 seconds.

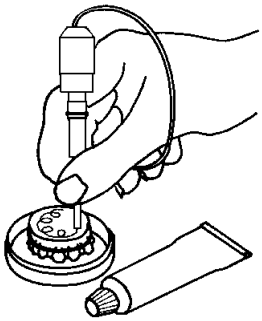

Fig. 9-28: pH-Electrode - cleaning procedure (2)

Remove any remaining cleaning paste from the electrode with distilled water and a clean moistened tissue, applying slight pressure.

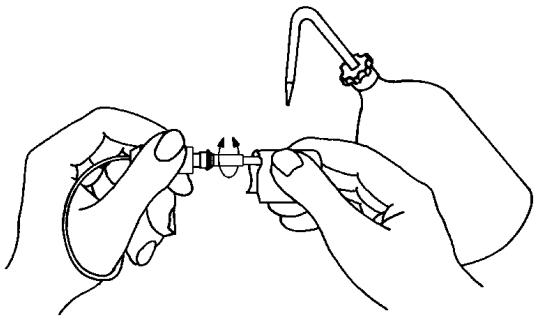

Fig. 9-29: pH-Electrode - cleaning procedure (3)

Immerse the electrode tip in Buffer 1 for at least one hour (optimal 12 hours).

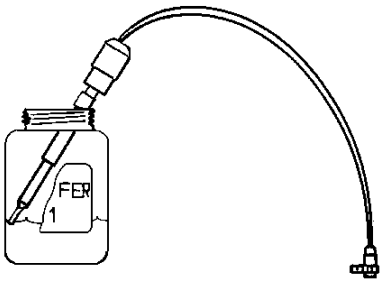

Fig. 9-30: pH-Electrode - immerse into Buffer 1

Attach a new pH-Electrode housing and reinstall the electrode in the measuring chamber block.
Reconnect the electrode connector and the electrode clip.
Close the cover.
Initiate the corresponding calibration.

PCO_2-Electrode

The PCO_2-Electrode consists of the inner electrode, the housing with the membrane and the electrolyte solution and is marked with a green grip.

The membrane housing should be replaced periodically. Membrane replacement can be easily performed by the operator.

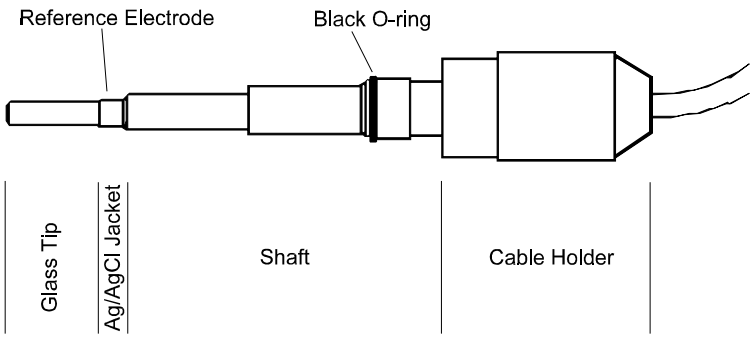

Fig. 9-31: PCO_2-Electrode

***NOTE**: Do not use abrasive cleaning solutions, which may damage the inner element.*
Make sure that the electrolyte solution is free of air bubbles. The inner element and the entire electrode must never dry out.
The inner element or the entire electrode must be stored in PCO_2-- Electrolyte solution with the Ag/AgCl electrode ring completely immersed.

***NOTE:** Never allow the tip of the glass electrode to touch hard surfaces (e.g. glass).*
Place a soft cloth at the bottom of the glass cup in which the PCO_2 - Electrode or its inner part is stored.

Replacing the membrane housing, see page 9-48.

Cleaning before replacing the housing

The PCO_2-Electrode is marked with a green grip.
Disconnect the cable from the PCO_2-Electrode, pull out its clip and remove the electrode from the measuring chamber.
Carefully remove the inner element from the housing avoiding spillage of electrolyte solution.
Dispose of the old electrode housing according to applicable safety regulations or procedures.

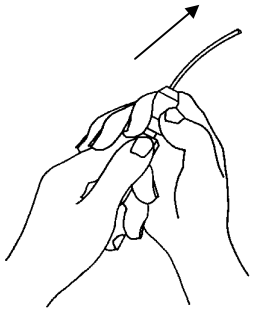

Fig. 9-32: PCO_2-Electrode - remove inner element

Replace the inner O-ring if necessary (e.g. if brittle, or worn).

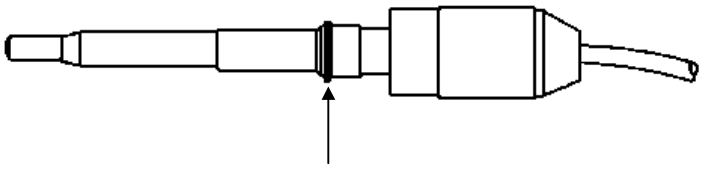

Fig. 9-33: PCO_2-Electrode - inner element

Clean shaft of the inner part, glass tip and Ag/AgCl ring with a tissue moistened with distilled water.

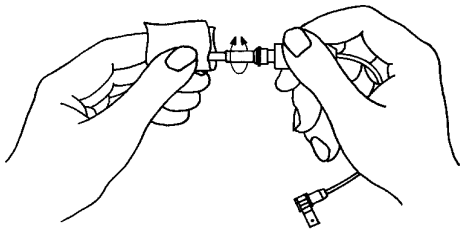

Fig. 9-34: PCO_2-Electrode - cleaning shaft

Check whether the Ag/AgCl ring displays a uniform dark brown color.
If the Ag/AgCl ring displays white spots, contact your service office.

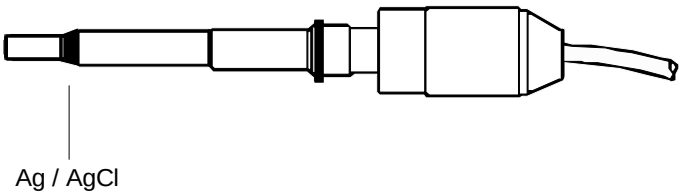

Fig. 9-35: PCO_2-Electrode - inner shaft

Rinse glass tip, Ag-AgCl-ring and shaft very carefully with distilled water.
Dry the complete inner shaft with a clean tissue.

Cleaning of the glass tip

NOTE: *Perform only 2 or 3 times a year, if the glass tip of the electrode is heavily soiled !*

The PCO_2 inner electrode should be cleaned when it looks contaminated.
Carefully remove the PCO_2-Electrode from the measuring chamber.
Remove and dispose of the green electrode housing according to applicable safety regulations or procedures.
Replace the electrode O-ring if necessary (e.g. if brittle, or worn).
Moisten the chamois leather of the electrode cleaning box with a few drops of distilled water.
Squeeze a small amount of electrode cleaning paste onto the moistened chamois leather.

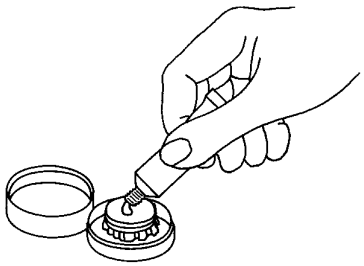

Fig. 9-36: PCO_2-Electrode - cleaning procedure (1)

NOTE*: Do not attempt to clean the Ag/AgCl brown ring of the electrode with electrode cleaning paste.*

Holding the electrode between your thumb and forefinger, polish it with the chamois leather for about 15 seconds with circular movements, applying slight pressure.

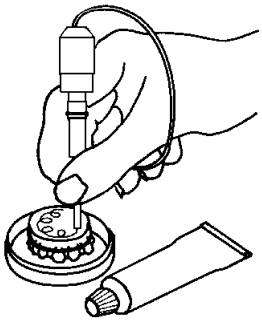

Fig. 9-37: *P*CO_2-Electrode - cleaning procedure (2)

Remove any cleaning paste from the electrode with distilled water and a clean moistened tissue.

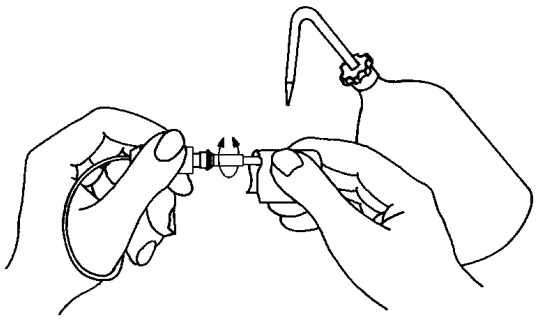

Fig. 9-38: *P*CO_2-Electrode - cleaning procedure (3)

Immerse electrode tip into *P*CO_2 electrolyte for at least one hour (optimal 12 hours).
Fit a new *P*CO_2-Electrode housing (see page 9-48), fill the housing with *P*CO_2-electrolyte and insert the inner part into the housing.
Reinstall *P*CO_2-Electrode into the measuring chamber block, secure the electrode clip and reconnect the electrode plug.
Close the cover.
Initiate the corresponding calibration.

PO_2-Electrode

The PO_2-Electrode consists of the inner electrode, the housing with the membrane and the electrolyte solution and is marked with a blue grip. The membrane housing should be replaced periodically. Membrane replacement can be easily performed by the operator.

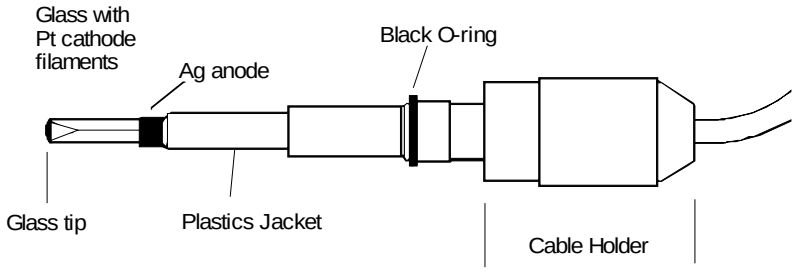

Fig. 9-39: PO_2-Electrode

***NOTE**: Do not use abrasive cleaning solutions, which may damage the inner element*
The inner element or the entire electrode should be stored in PO_2 _electrolyte solution.

***NOTE**: Never allow the tip of the glass electrode to touch any hard surface (e.g. glass). Place a soft cloth at the bottom of the glass cup in which the PO_2-Electrode or its inner part is stored.*

Replacing the membrane housing, see page 9-48.

Cleaning

Carefully disconnect the PO_2-Electrode cable by pulling the plug gently.
Release its clip and remove the electrode from the measuring chamber block.
Carefully remove the inner electrode from the housing avoiding spillage of electrolyte solution.
Dispose of the old electrode housing according to applicable safety regulations or procedures.
Replace the inner O-ring if necessary (e.g. if brittle, or worn).
Moisten the chamois leather of the electrode cleaning box with a few drops of distilled water.
Squeeze a small amount of electrode cleaning paste on to the moistened chamois leather.

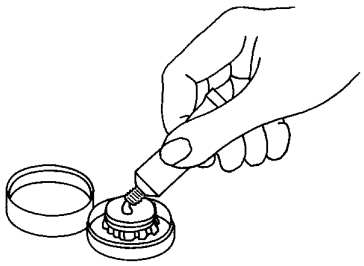

Fig. 9-40: PO_2-Electrode - cleaning procedure (1)

***NOTE**: Do not clean the brown Ag/AgCl ring with electrode cleaning paste.*

Hold the electrode between your thumb and forefinger, polish it with the chamois leather for about 15 seconds in circular movement, applying slight pressure.

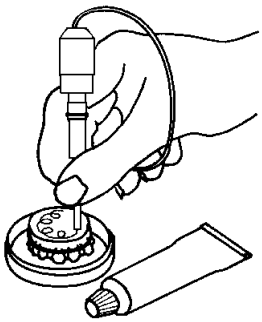

Fig. 9-41: PO_2-Electrode - cleaning procedure (2)

Remove any remaining cleaning paste from the electrode with distilled water and a clean moistened tissue.

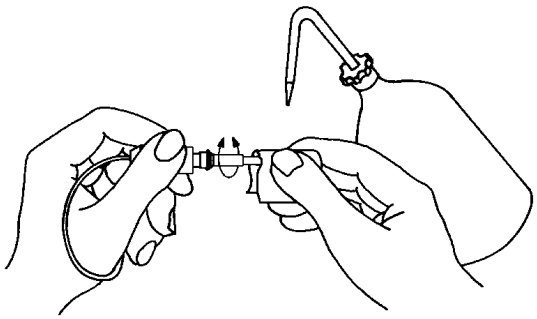

Fig. 9-42: PO_2-Electrode - cleaning procedure (3)

Dry the complete inner shaft with a clean tissue.
Attach a new PO_2-Electrode housing, filled with PO_2 electrolyte.
Reinstall PO_2-Electrode into the measuring chamber block, fit the electrode clip and reconnect the electrode plug.
Close the cover.
Initiate the corresponding calibration.

Replacing the membrane housing of PCO_2- and PO_2-Electrodes

***NOTE**: Before replacing the electrode housing of the PCO_2-Electrode a special cleaning procedure is necessary (for details, please refer to page 9-43).*

Take a new electrode housing for PCO_2-Electrode (green) or PO_2-Electrode (blue).
Remove its white protective cap.

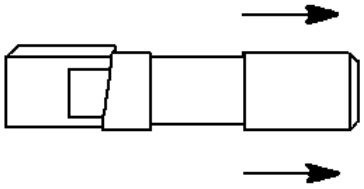

Fig. 9-43: Electrode housing with protective cap

Fill the electrode housing with PCO_2-Electrolyte or PO_2-Electrolyte by holding the housing in a slightly inclined position and inserting the tip of the PCO_2- or PO_2-Electrolyte bottle.
Fill the housing to the overflow opening.

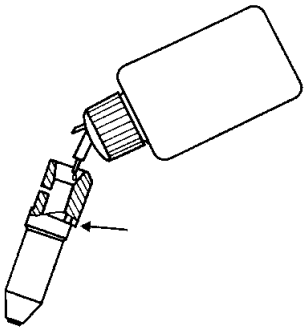

Fig. 9-44: Filling electrode housing with Electrolyte

Gently tap the electrode housing to remove any air bubbles from the tip.

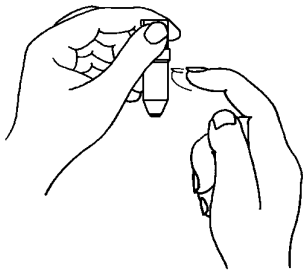

Fig. 9-45: Remove air bubbles

Incline the housing slightly with the overflow hole downwards.

Carefully insert the inner electrode until resistance is felt.

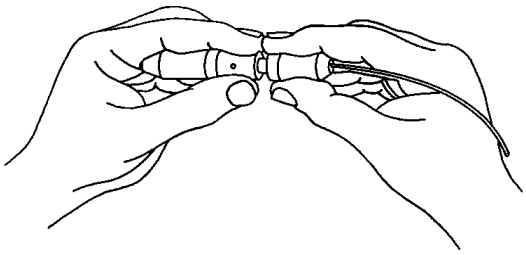

Fig. 9-46: Insert inner part

Insert the inner electrode until it is flush with the housing.
Rotate the inner section one quarter in both directions.

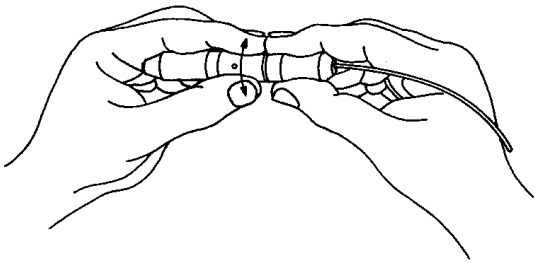

Fig. 9-47: Insert inner part

***NOTE**: Slightly turn the inner part of the electrode, for optimal membrane tension. This also prevents the inner element from being pushed back out of the housing after release, due to the elasticity of the O-ring.*

Dry the electrode carefully with a tissue. Close the overflow hole of the housing with coroplast adhesive tape (10 mm x 10 mm).

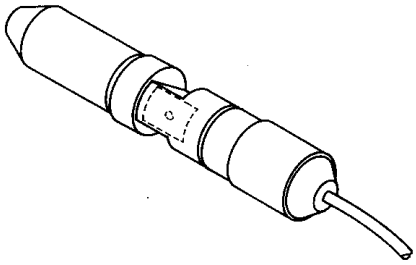

Fig. 9-48: Close overflow hole of the electrode housing

ATTENTION! *Make sure that the tape does not overlap onto the two lateral flat spots pf the electrode housing, as this could create difficulties inserting the electrode clip.*

When the inner part is inserted into the electrode housing silicon grease is extruded.

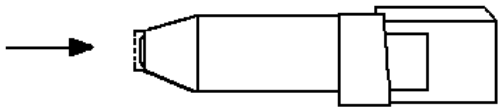

Fig. 9-49: Silicon grease of the tip of the electrodes

Remove this grease with a cotton swab or tissue. When using a tissue, double it to be able to remove the silicon grease in the space between O-ring and membrane with the tip of the tissue.
Reinstall PCO_2-Electrode or PO_2-Electrode into the measuring chamber block, fit the electrode tip and reconnect electrode plug.
Close the cover.
Initiate the corresponding calibration.

NOTE*: If a warning or a alarm is displayed during calibration, try to recalibrate once again, then repeat replacement of the membrane.*

10 Electronic diagrams

COBA Control Board (AVL Compact 1 and 2 from SN 1500 on and AVL Compact 3) 10-1
Power (sheet 1) 10-1
User interface (sheet 2) 10-2
Valve control (sheet 3) 10-3
Pump control (sheet 4) 10-4
Amplifier (sheet 5) 10-5
Analog part 1 (sheet 6) 10-6
Analog part 2 (sheet 7) 10-7
Digital part 1 (sheet 8) 10-8
Digital part 2 (sheet 9) 10-9
Digital part 3 (sheet 10) 10-10
Components location 10-11
C2-Connector Board
(AVL Compact 1, 2 and 3, with the exception of AVL Compact 1 up to SN 1000) 10-12
Circuit diagram 10-12
Components location 10-13
Connector Board (AVL Compact 1 and AVL Compact 2 from SN 1500 on) 10-14
Circuit diagram 10-14
Components location 10-15
Connector Board (AVL Compact 3) 10-16
Circuit diagram 10-16
Components location 10-17
Interface Board (AVL Compact 3, option at AVL Compact 2 only up to SN 1500) 10-18
Circuit diagram 10-18
Components location 10-19
SI-Board (AVL Compact 1 from SN 1500 on) 10-20
Circuit diagram 10-20
Components location 10-21
SI-Board (AVL Compact 2 from SN 1500 on and AVL Compact 3) 10-22
Circuit diagram 10-22
Components location 10-23
Hall Switch (AVL Compact 1, 2 and 3, with the exception of AVL Compact 1 up to SN 1000) 10-24
Circuit diagram 10-24
Components location 10-25
MC-Board 10-26
Circuit diagram 10-26
Wiring COBA Control Board - measuring chamber 10-27

Appendix (old revision levels) 10-28
COBA Control Board (AVL Compact 1, SN 1001 up to 1500 and
AVL Compact 2 up to SN 1500) 10-29
Power (sheet 1) 10-29
User interface (sheet 2) 10-30
Valve control (sheet 3) 10-31
Pump control (sheet 4) 10-32
Amplifier (sheet 5) 10-33
Analog part 1 (sheet 6) 10-34
Analog part 2 (sheet 7) 10-35
Digital part 1 (sheet 8) 10-36
Digital part 2 (sheet 9) 10-37
Digital part 3 (sheet 10) 10-38
Components location 10-39

COBA Control Board (AVL Compact 1 up to SN 1000) 10-40
Power (sheet 7) 10-40
User interface (sheet 6) 10-41
Valve control (sheet 2) 10-42
Analog part 1 (sheet 1) 10-43
Analog part 2 (sheet 3) 10-44
Digital part 1 (sheet 4) 10-45
Digital part 2 (sheet 5) 10-46
Components location 10-47
Connector Board (AVL Compact 1 from SN 1001 to SN 1500 and AVL Compact 2 up to SN 1500) 10-48
Circuit diagram 10-48
Components location 10-49
SI-Board (AVL Compact 1 up to SN 1500 and AVL Compact 2 up to SN 1500) 10-50
Circuit diagram 10-50
Components location 10-51

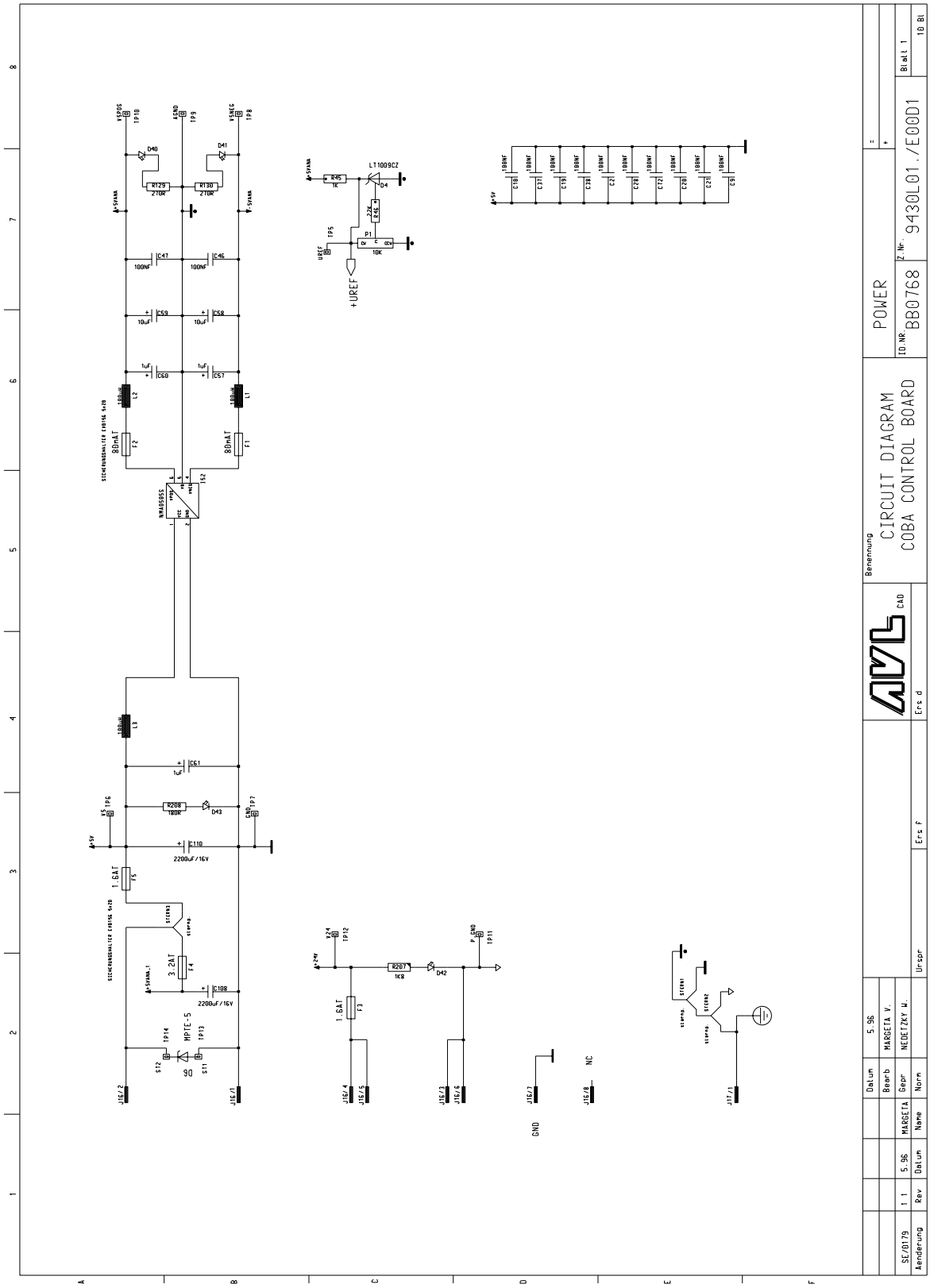

COBA Control Board (AVL Compact 1 and 2 from SN 1500 on and AVL Compact 3)

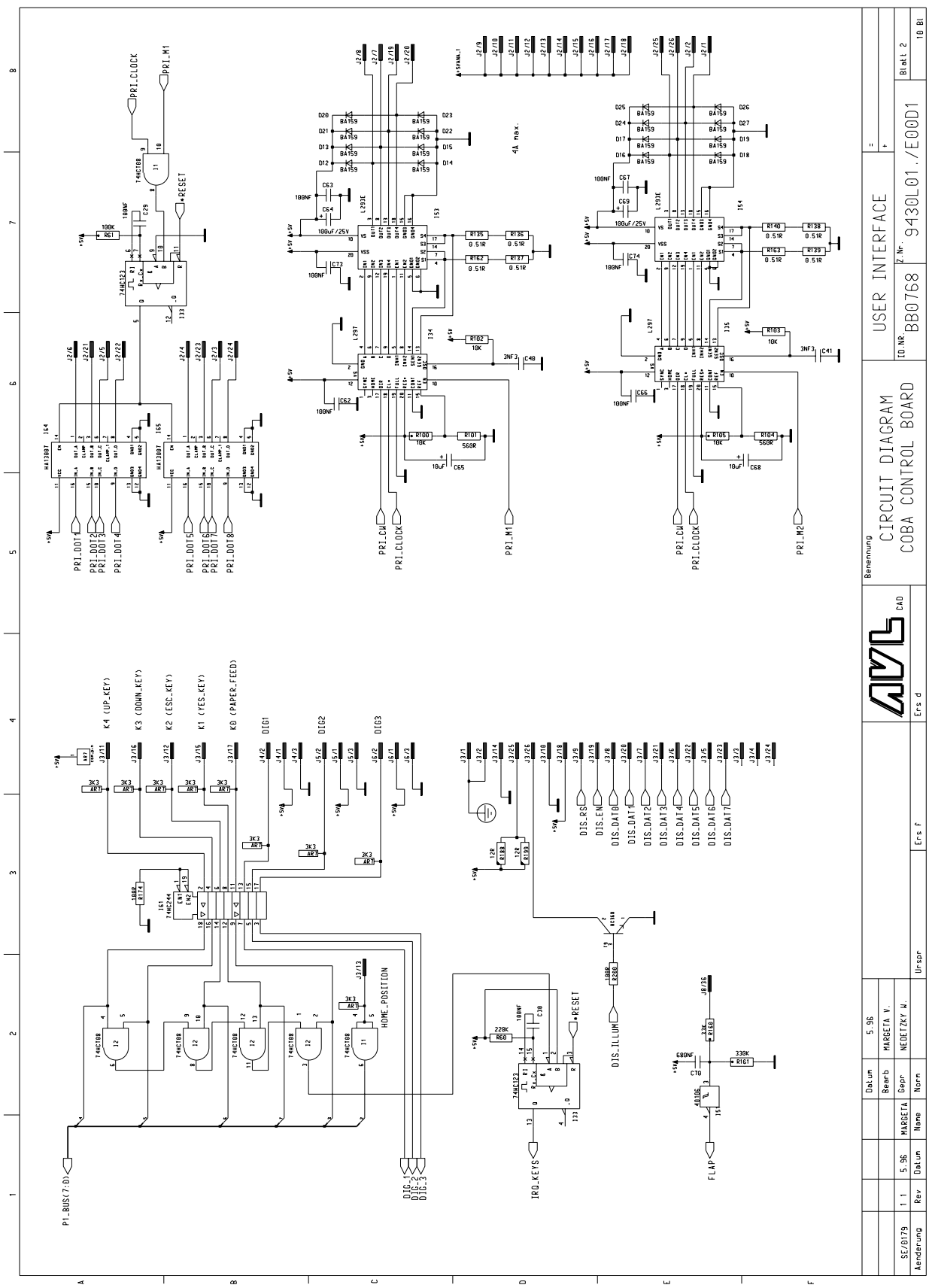

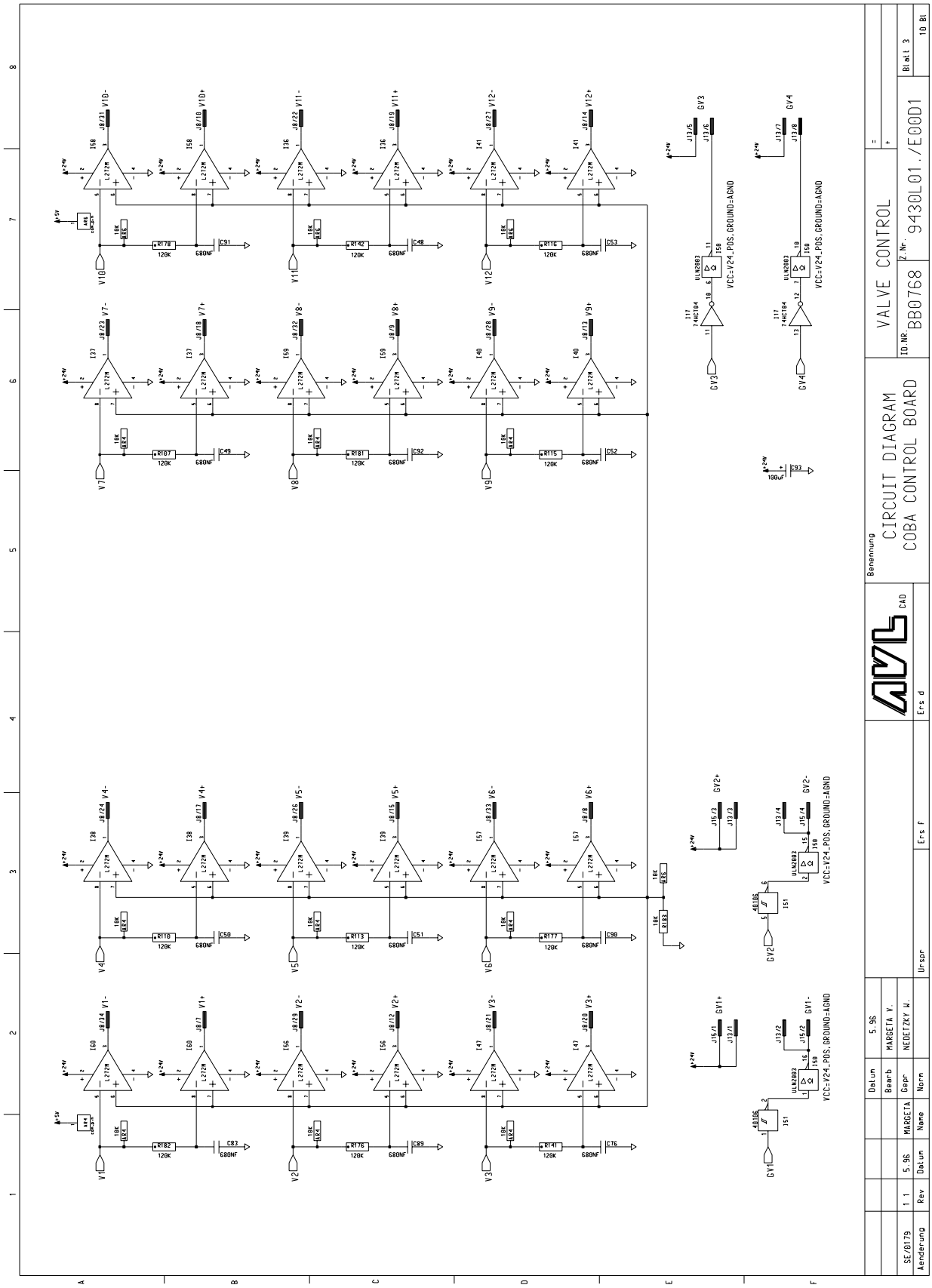

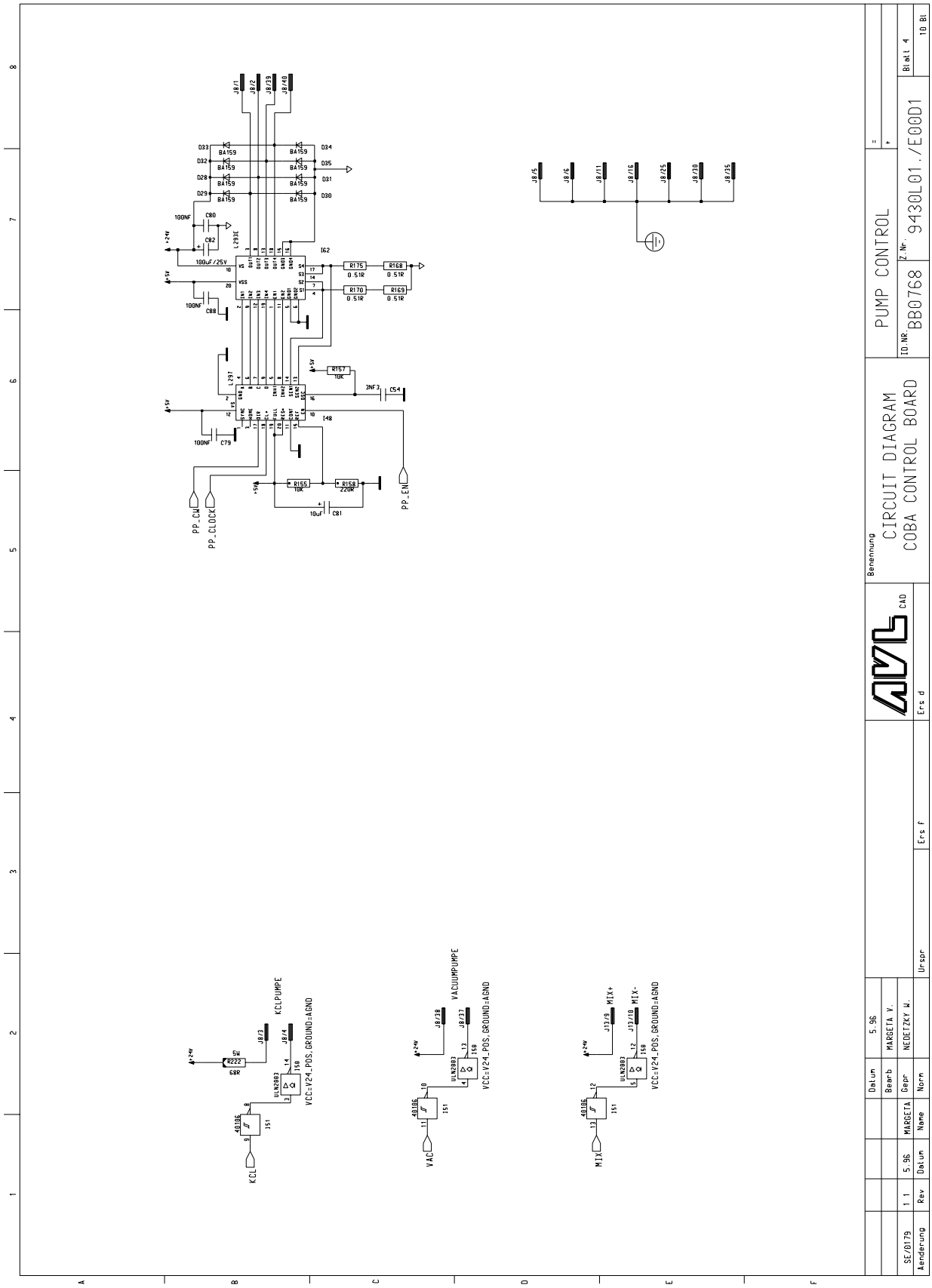

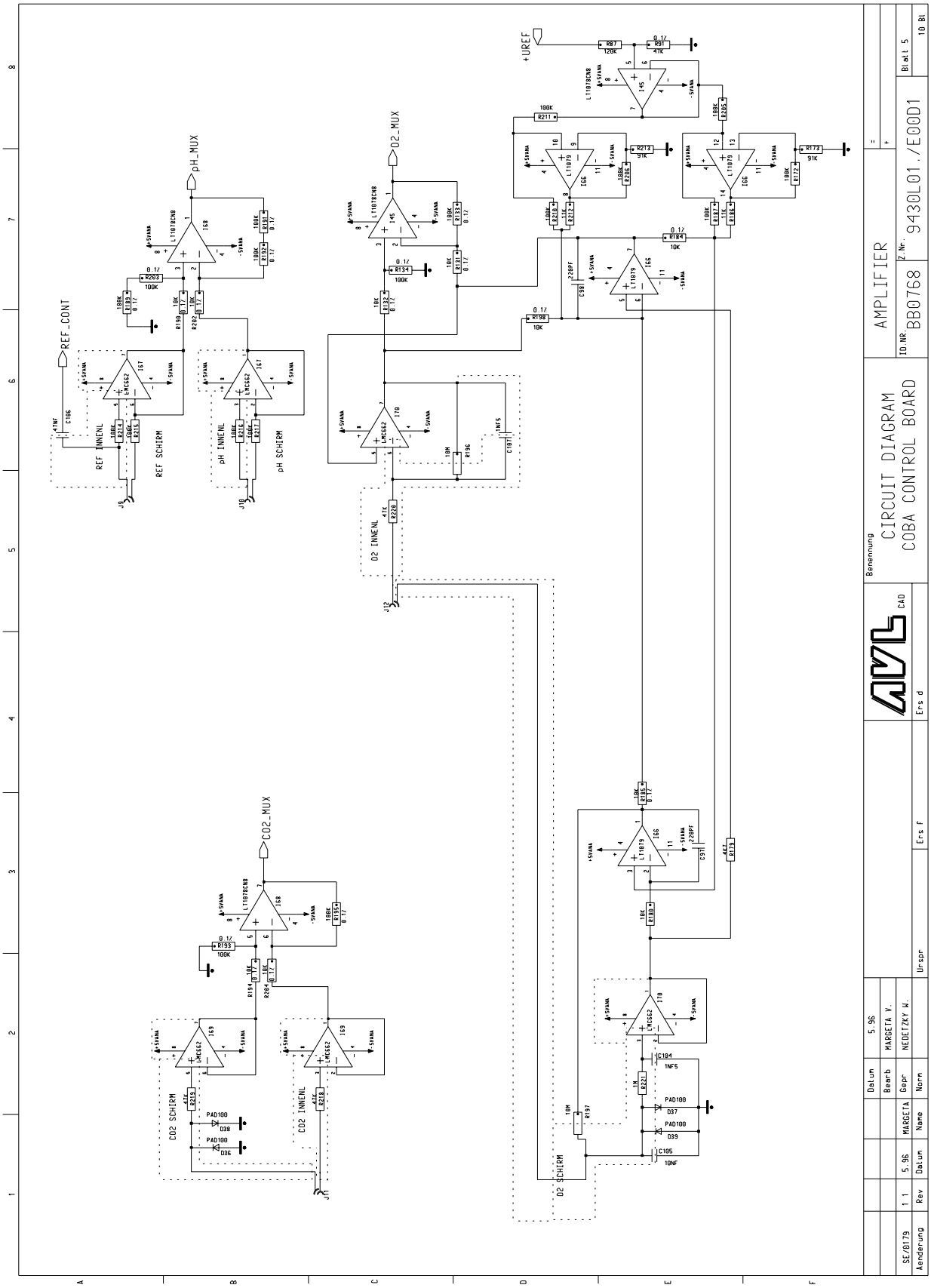

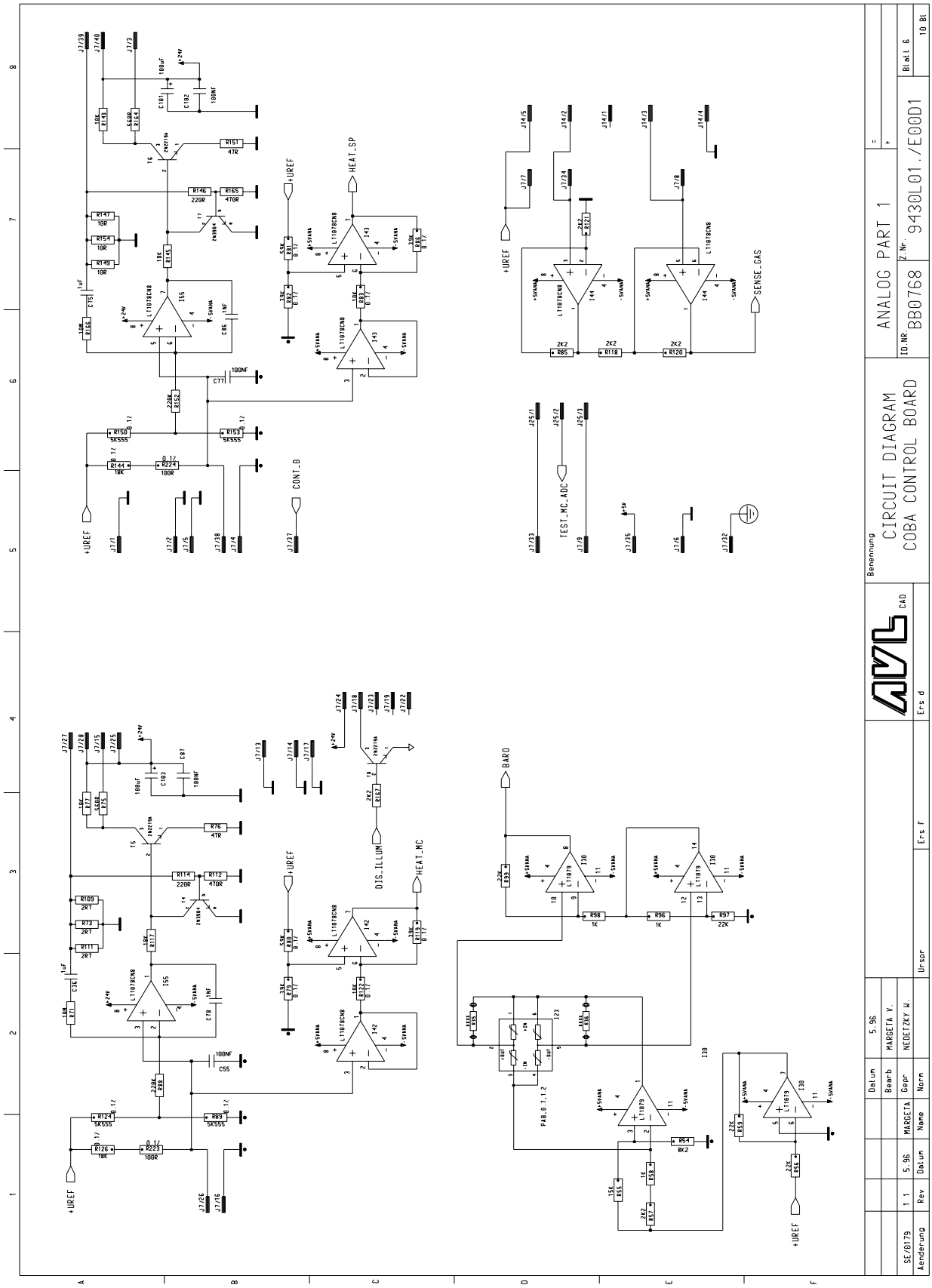

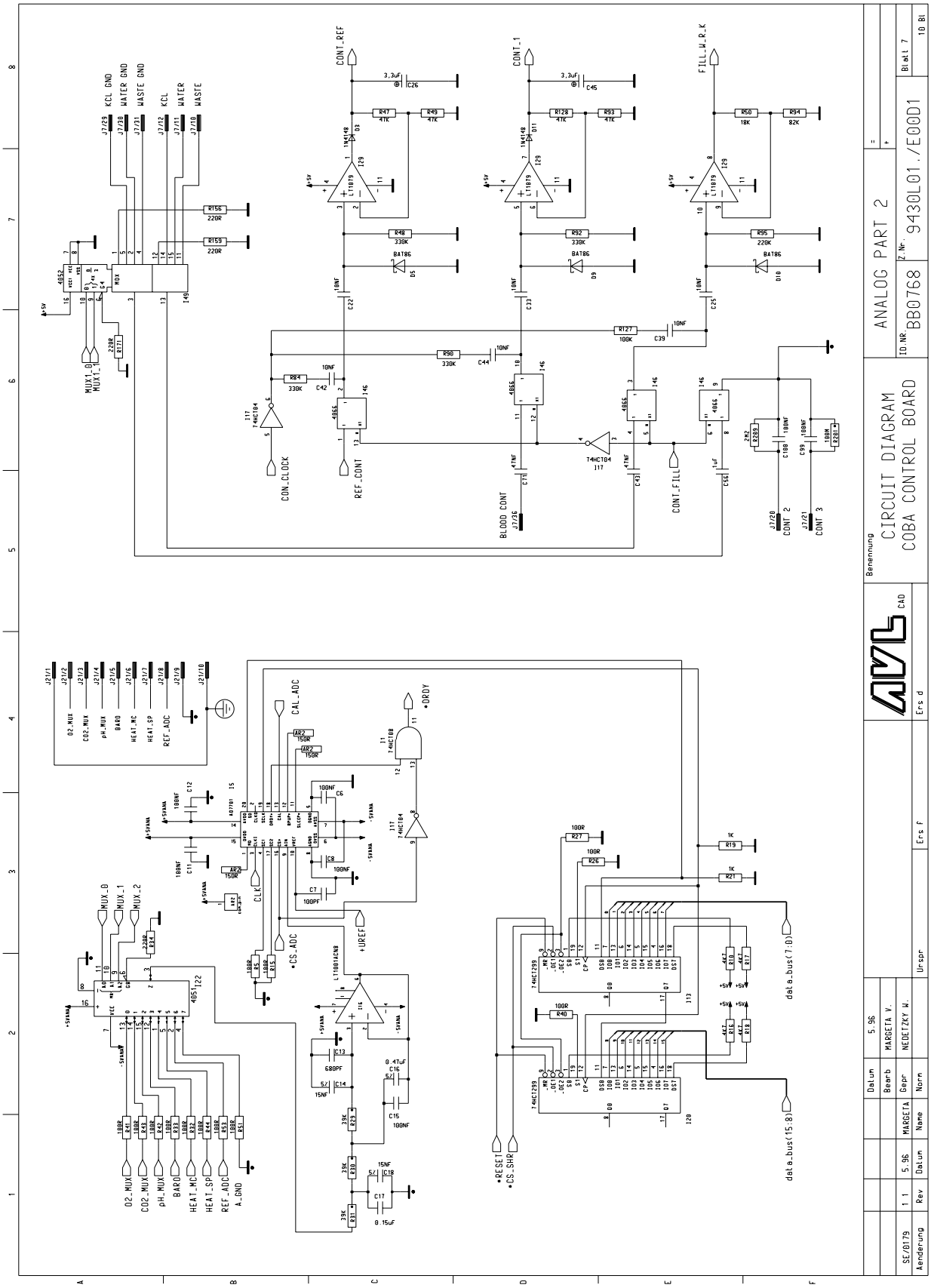

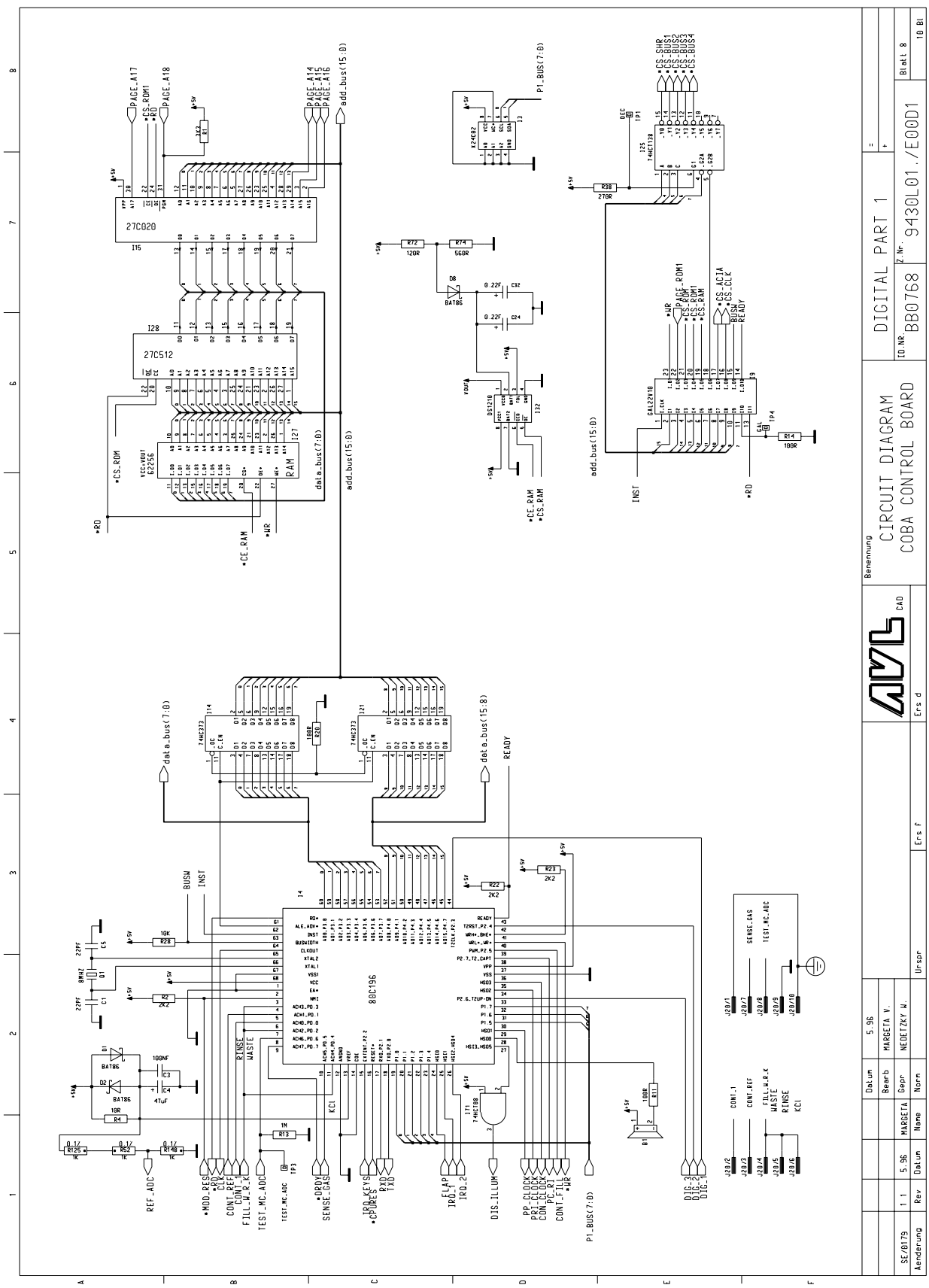
DIGITAL PART 1
CIRCUIT DIAGRAM
COBA CONTROL BOARD
BB0768
9430L01./E00D1
80C196
27C020
27C512
62256
74HC373
74HC138
74HC188
GAL22V10
DS1210
X24C02
BA786
P1_BUS(7:0)
data_bus(7:0)
data_bus(15:0)
PAGE_A17
PAGE_A18
PAGE_A14
PAGE_A15
PAGE_A16
CS_ROM1
CS_RAM
CE_RAM
CS_ACIA
CS_CLK
BUSW
INST
READY
RINSE
WASTE
KCI
REF_ADC
TEST_MC_ADC
SENSE_GAS
IRQ_KEYS
IRQ_LM
IRQ_2
DIS_ILLUM
PP_CLOCK
PRI_CLOCK
CONT_CLOCK
CONT_PRI
CONT_REF
FILL_W_R_K
DIG_3
DIG_1
CS_SHR
CS_BUS1
CS_BUS2
CS_BUS3
CS_BUS4
Copyright © 1992 AVL, all rights reserved

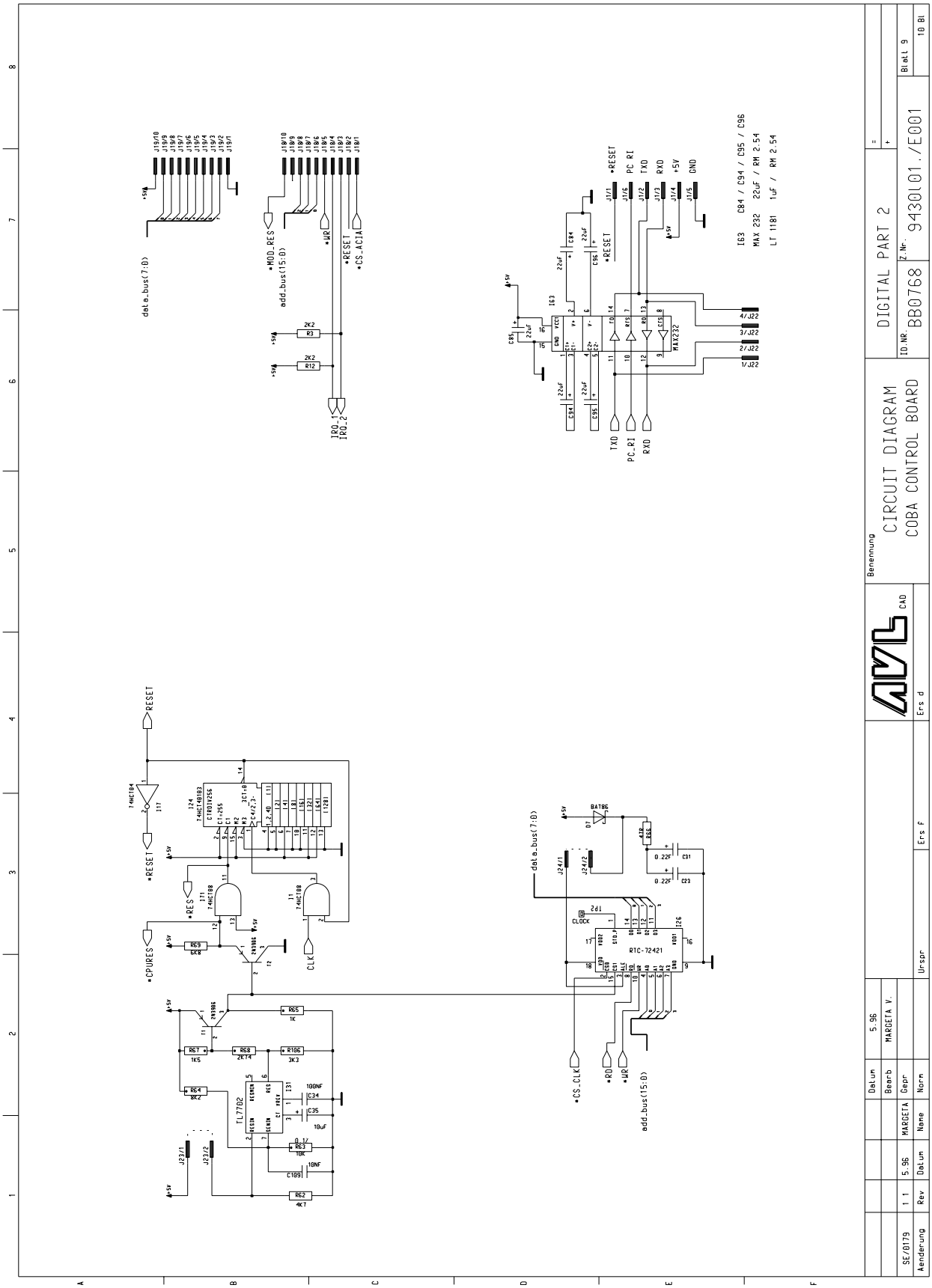

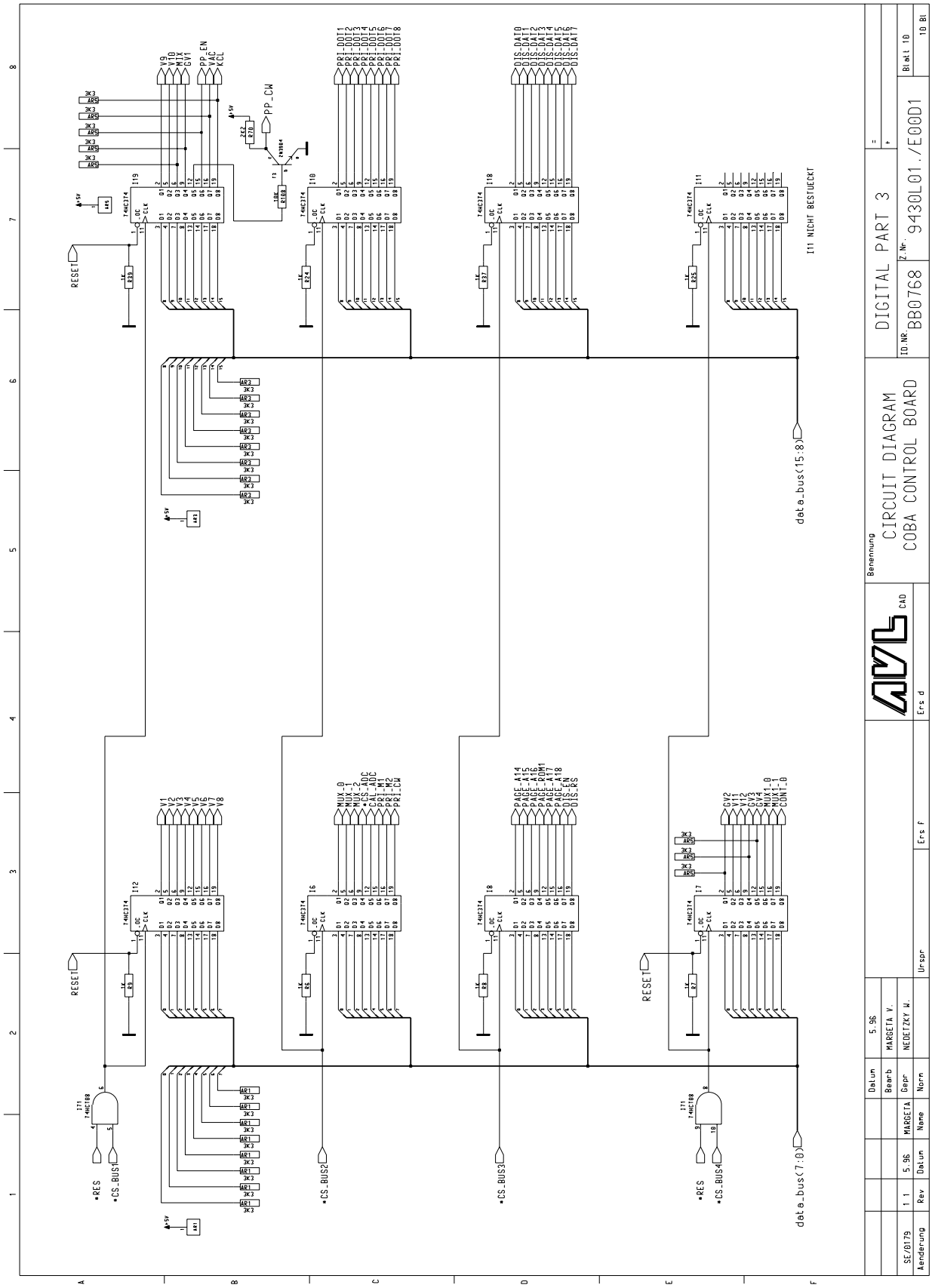

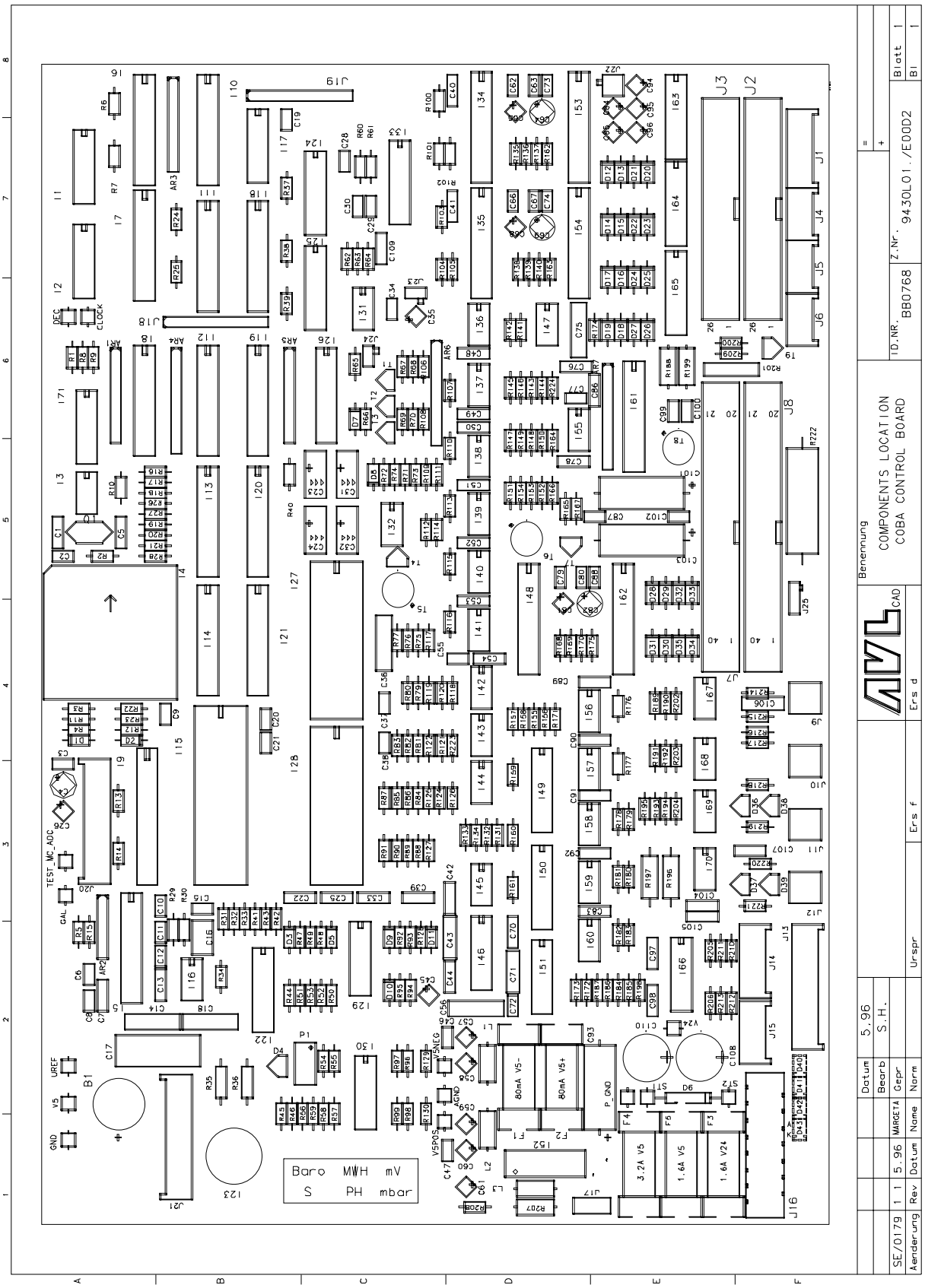

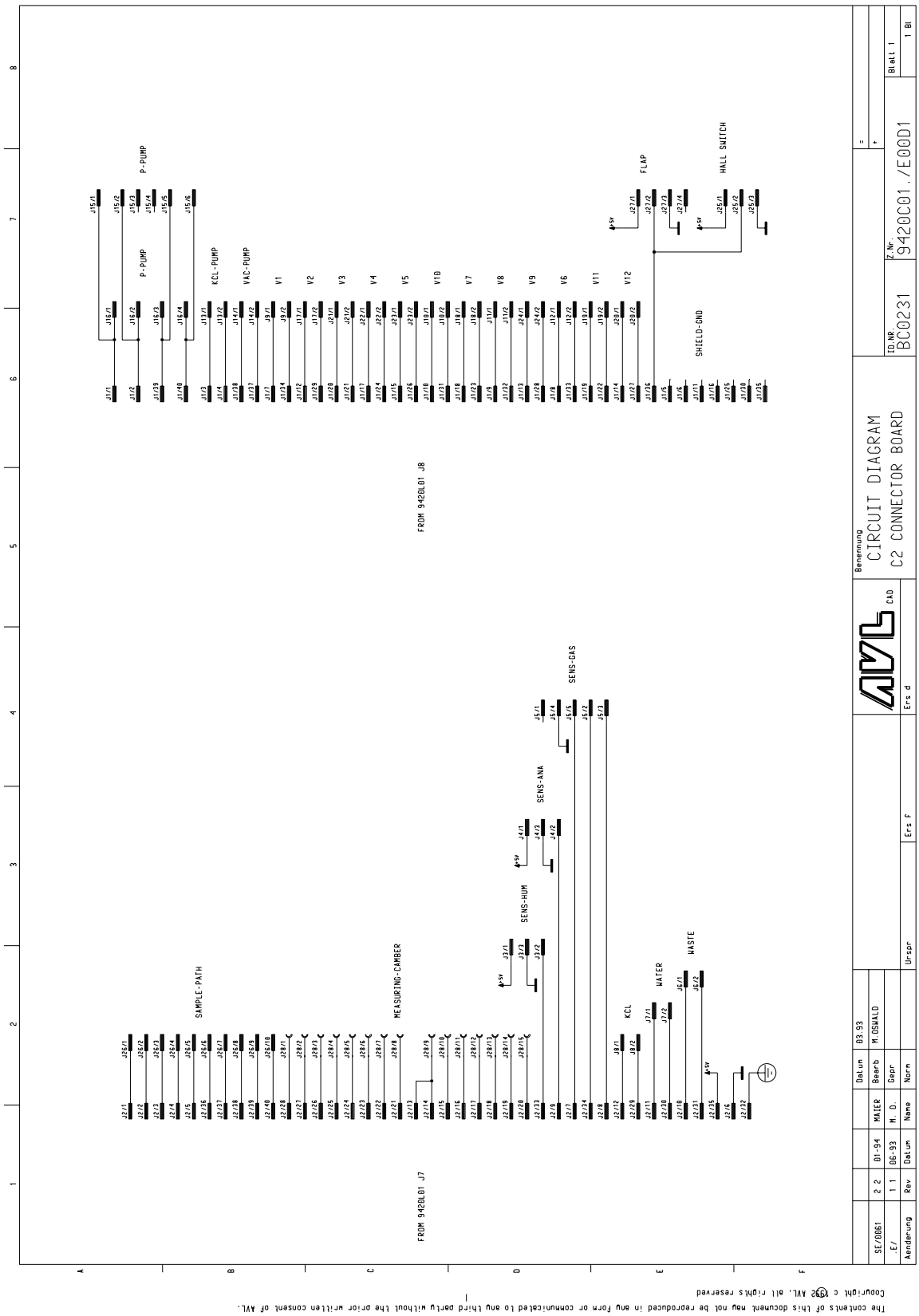

C2-Connector Board
(AVL Compact 1, 2 and 3, with the exception of AVL Compact 1 up to SN 1000)

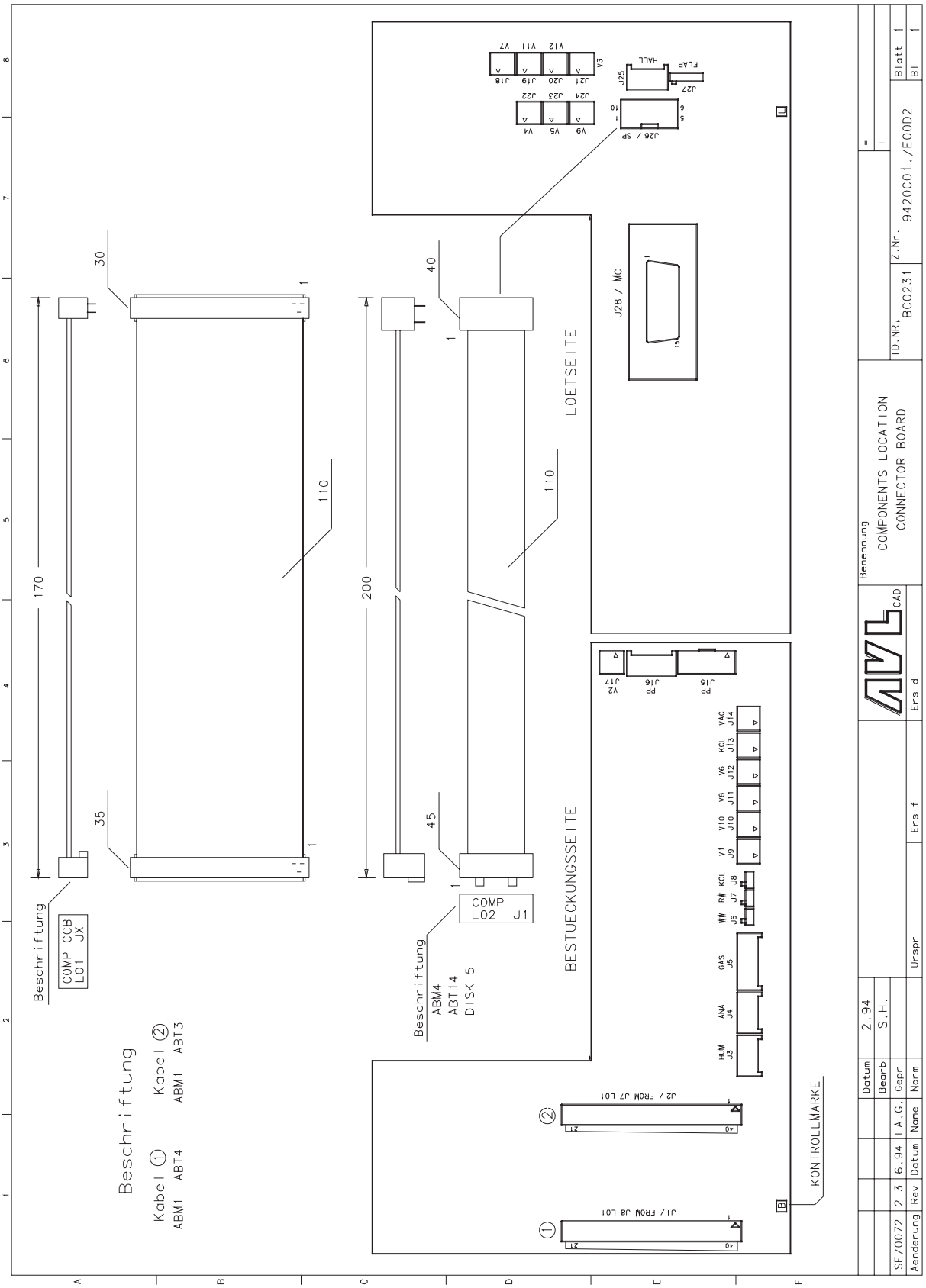

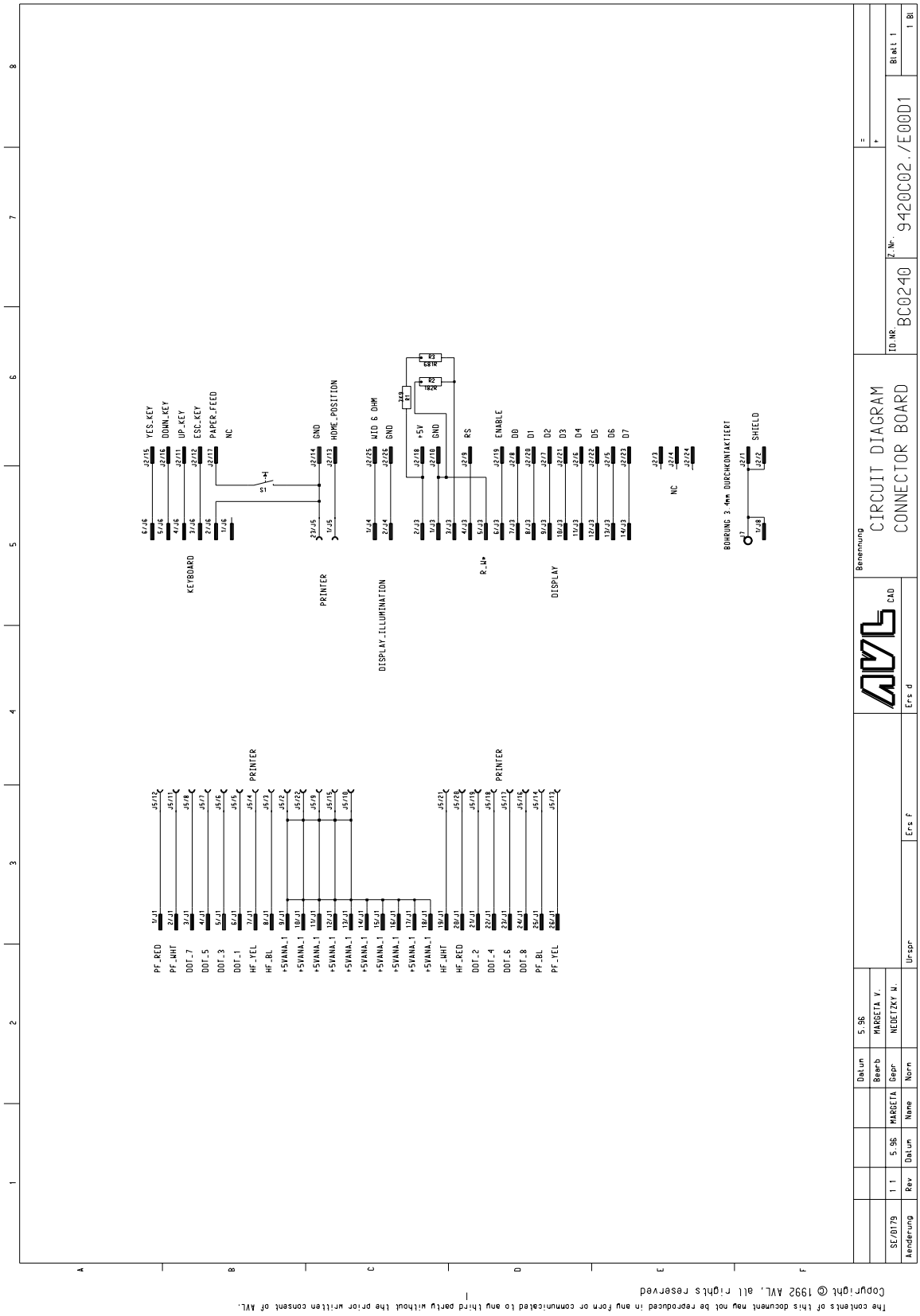

Connector Board (AVL Compact 1 and AVL Compact 2 from SN 1500 on)

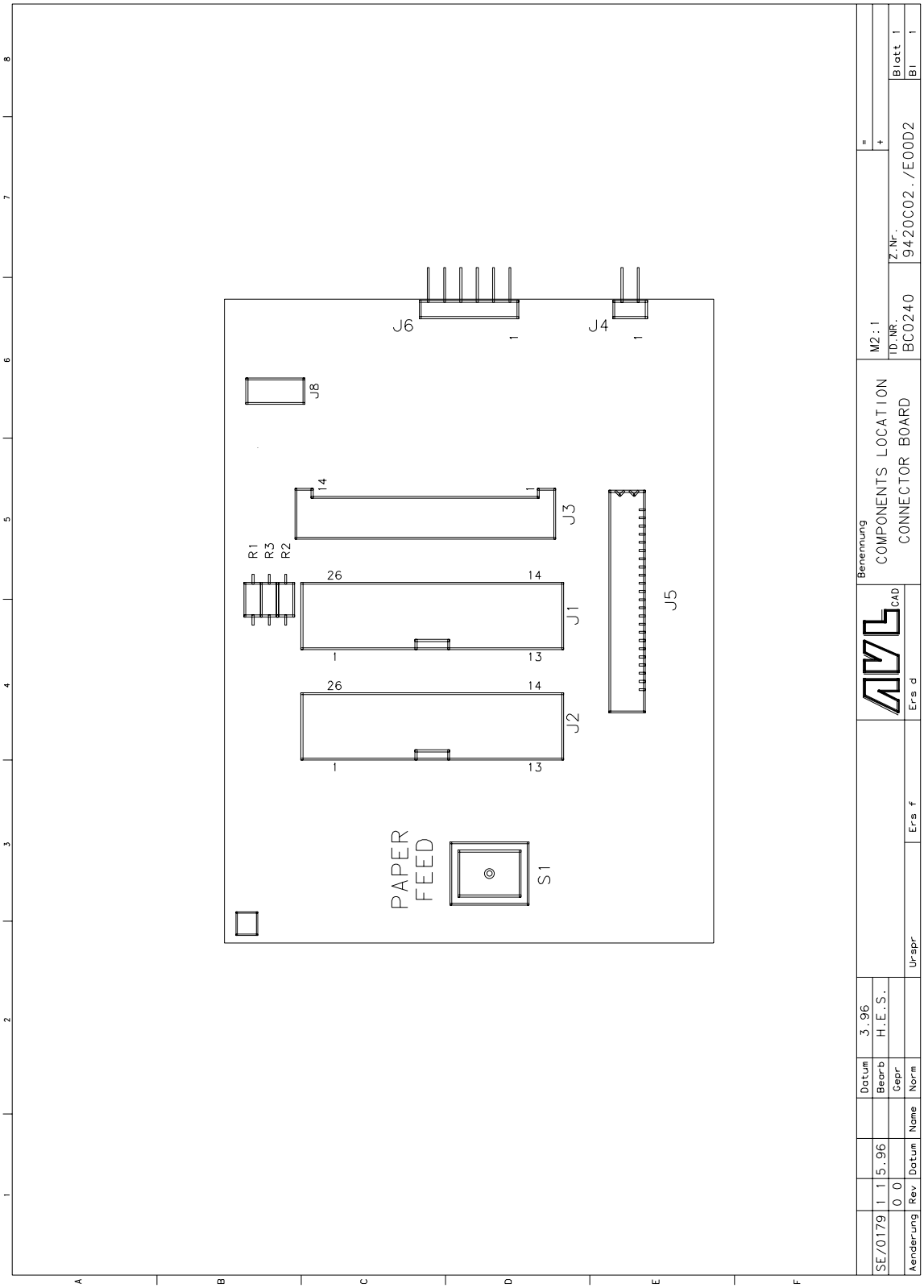

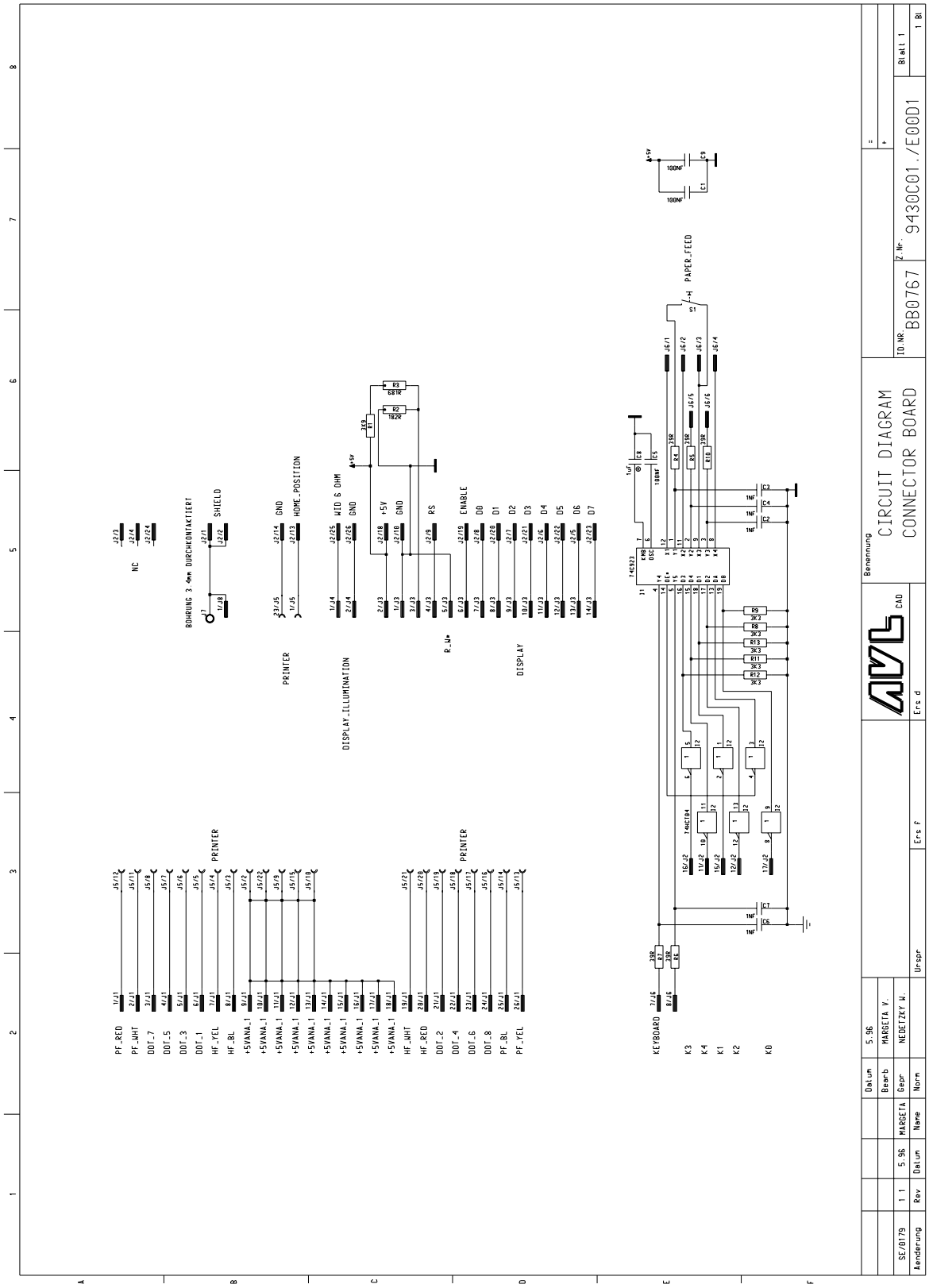

Connector Board (AVL Compact 3)

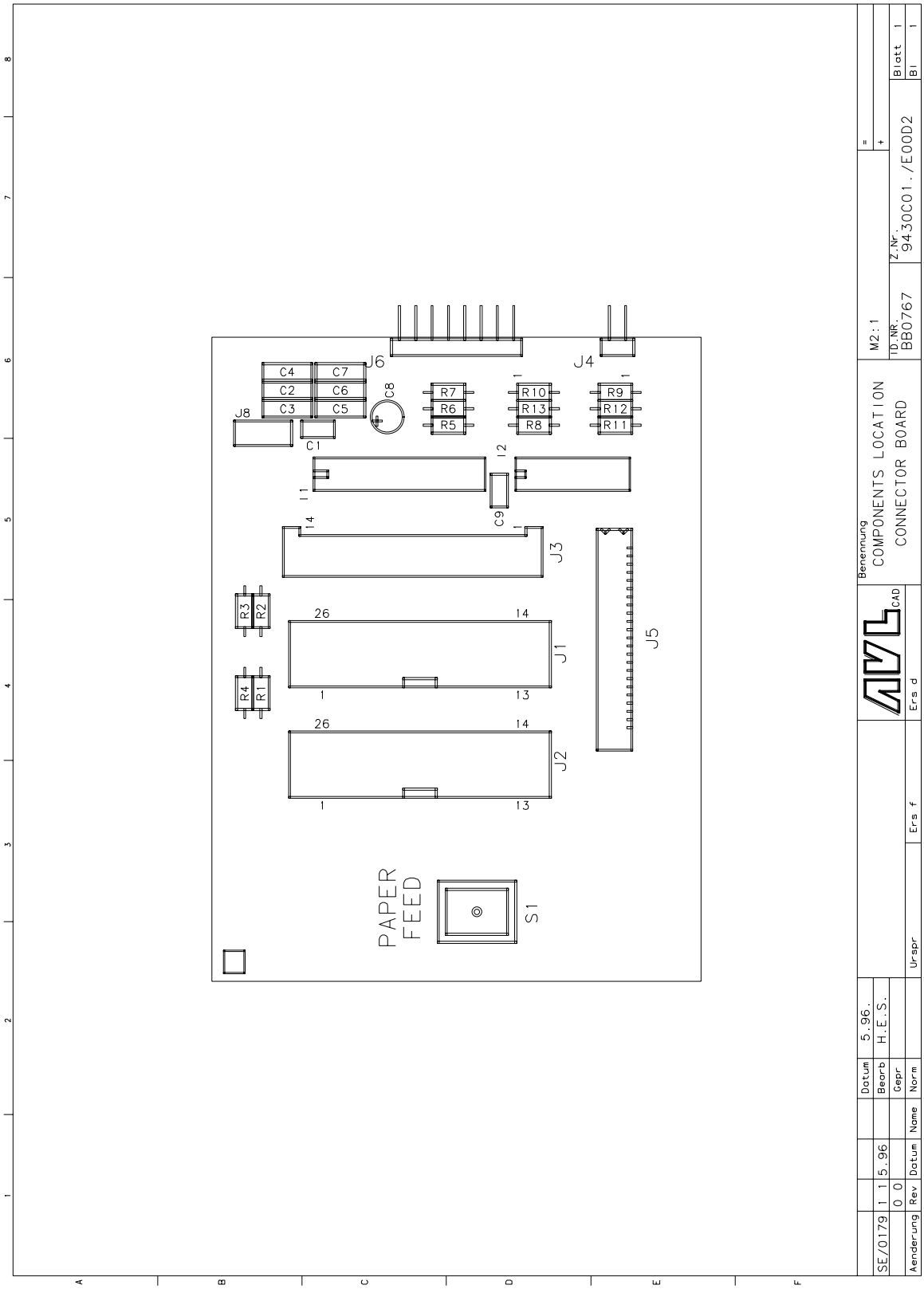

Connector Board (AVL Compact 3)

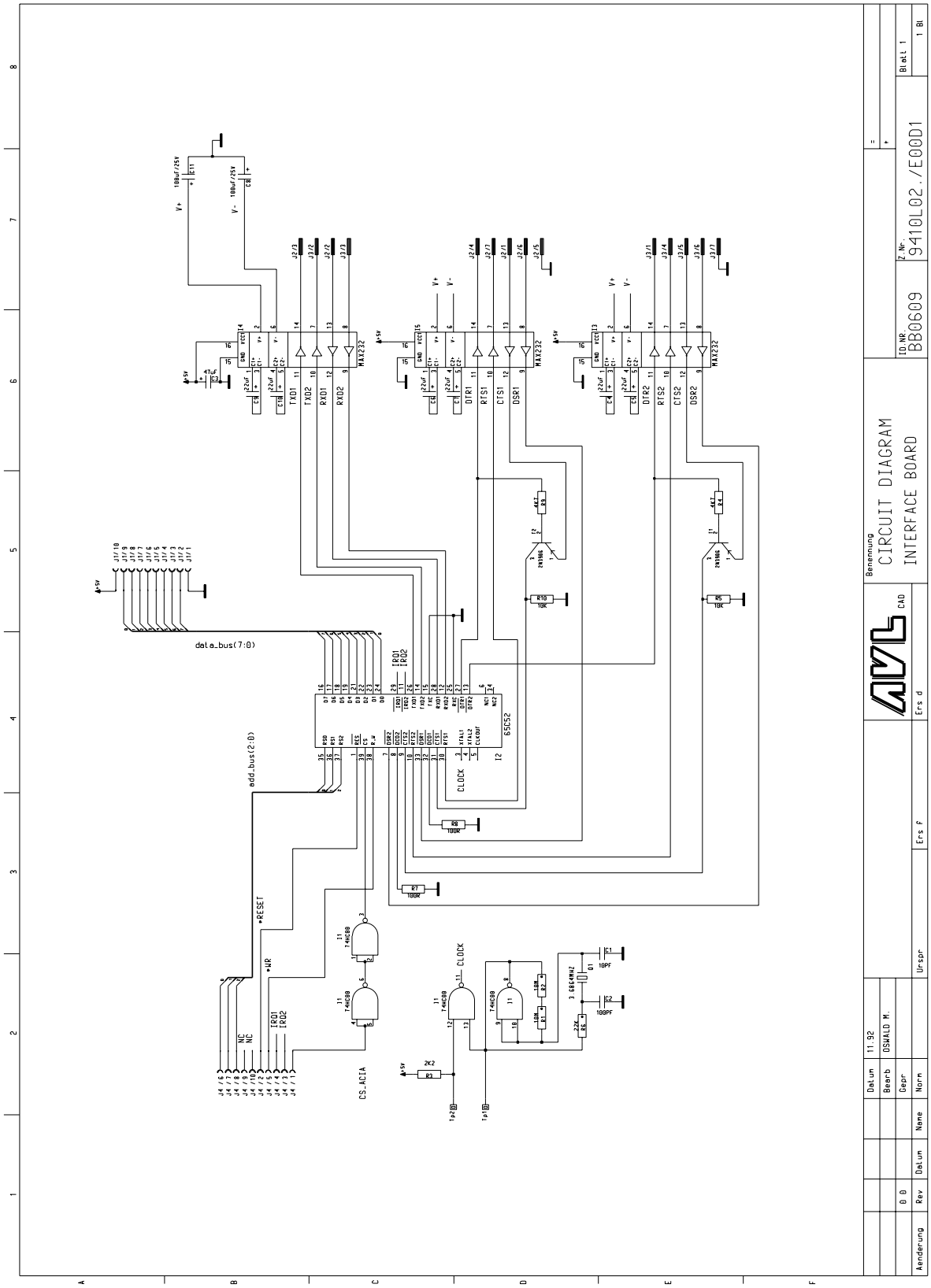

Interface Board (AVL Compact 3, option at AVL Compact 2 only up to SN 1500)

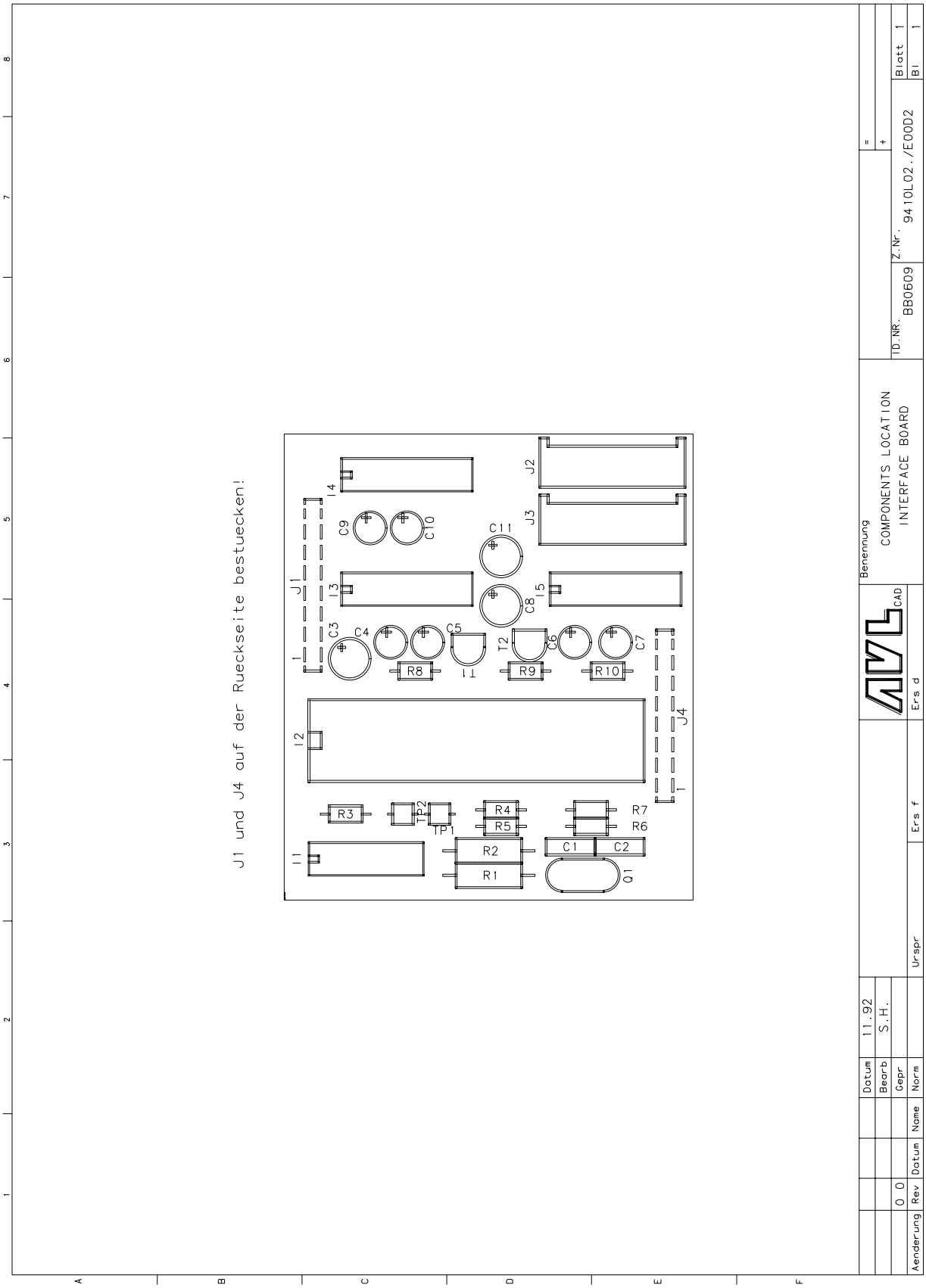

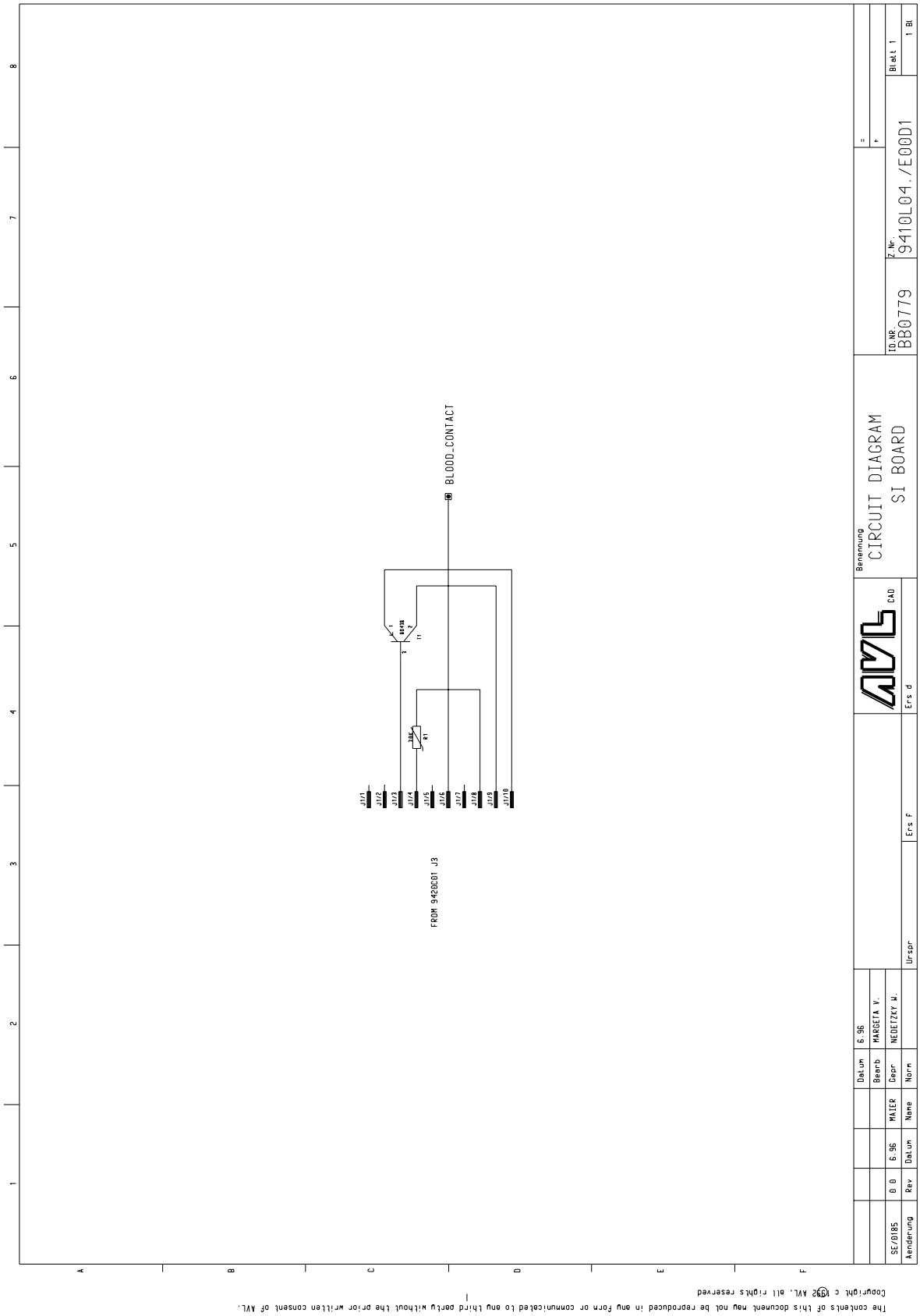

SI-Board (AVL Compact 1 from SN 1500 on)

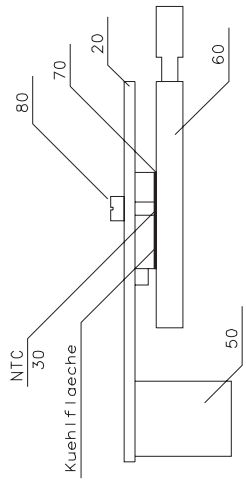

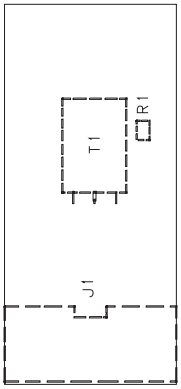

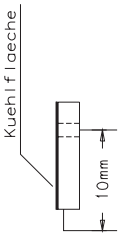

MONTAGEANLEITUNG

1) Print mit J1 bestuecken.
2) T1 : Anschluesse laut Zeichnung biegen.
3) Isolierfolie Pos.70 (ohne Waermeleitpaste) platzieren.
4) Den restlichen Heizblock mit Klarlack beschichten.
5) Print, Transistor, Isolierplaettchen und Heizblock laut Zeichnung verschrauben.
6) NTC - und Transistoranschluesse verloeten und Loetstellen mit Silikon isolieren.

				Datum	6.96			
				Bearb	S.H.			
SE/0185	0 0	6.96	L.A.G.	Gepr				
Aenderung	Rev	Datum	Name	Norm		Urspr	Ers f	Ers d

AVL CAD

Benennung
COMPONENTS LOCATION
SI - BOARD

=
+
ID.NR. BB0779
Z.Nr. 9410L04./E00D2
Blatt 1
Bl 1

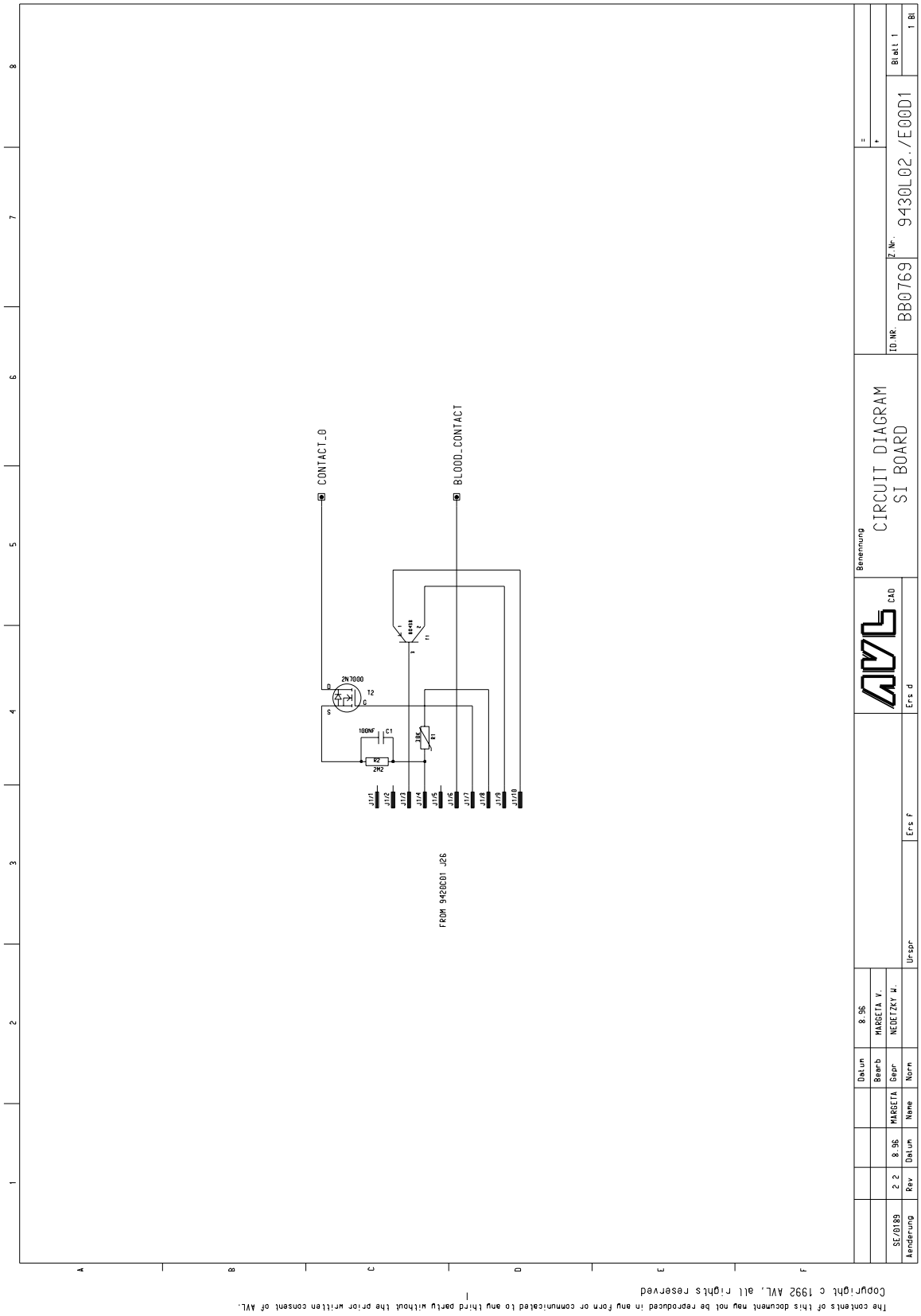

SI-Board (AVL Compact 2 from SN 1500 on and AVL Compact 3)

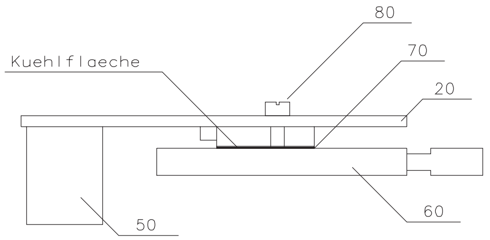

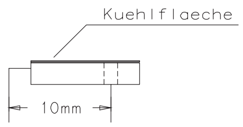

MONTAGEANLEITUNG

1) Print mit J1 bestuecken.
2) T1 : Anschluesse laut Zeichnung biegen.
3) Isolierfolie Pos.70 (ohne Waermeleitpaste) plazieren.
4) Den restlichen Heizblock mit Klarlack beschichten.
5) Print, Transistor, Isolierplaettchen und Heizblock laut Zeichnung verschrauben.
6) NTC - und Transistoranschluesse verloeten.

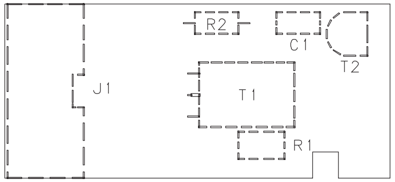

				Datum	8.96				Benennung		=
				Bearb	S.H.				COMPONENTS LOCATION SI - BOARD		+
SE/0189	2 2	8.96	MARGETA	Gepr				AVL CAD		ID.NR. BB0769	Z.Nr. 9430L02./E00D2	Blatt 1
Aenderung	Rev	Datum	Name	Norm		Urspr	Ers f	Ers d				Bl 1

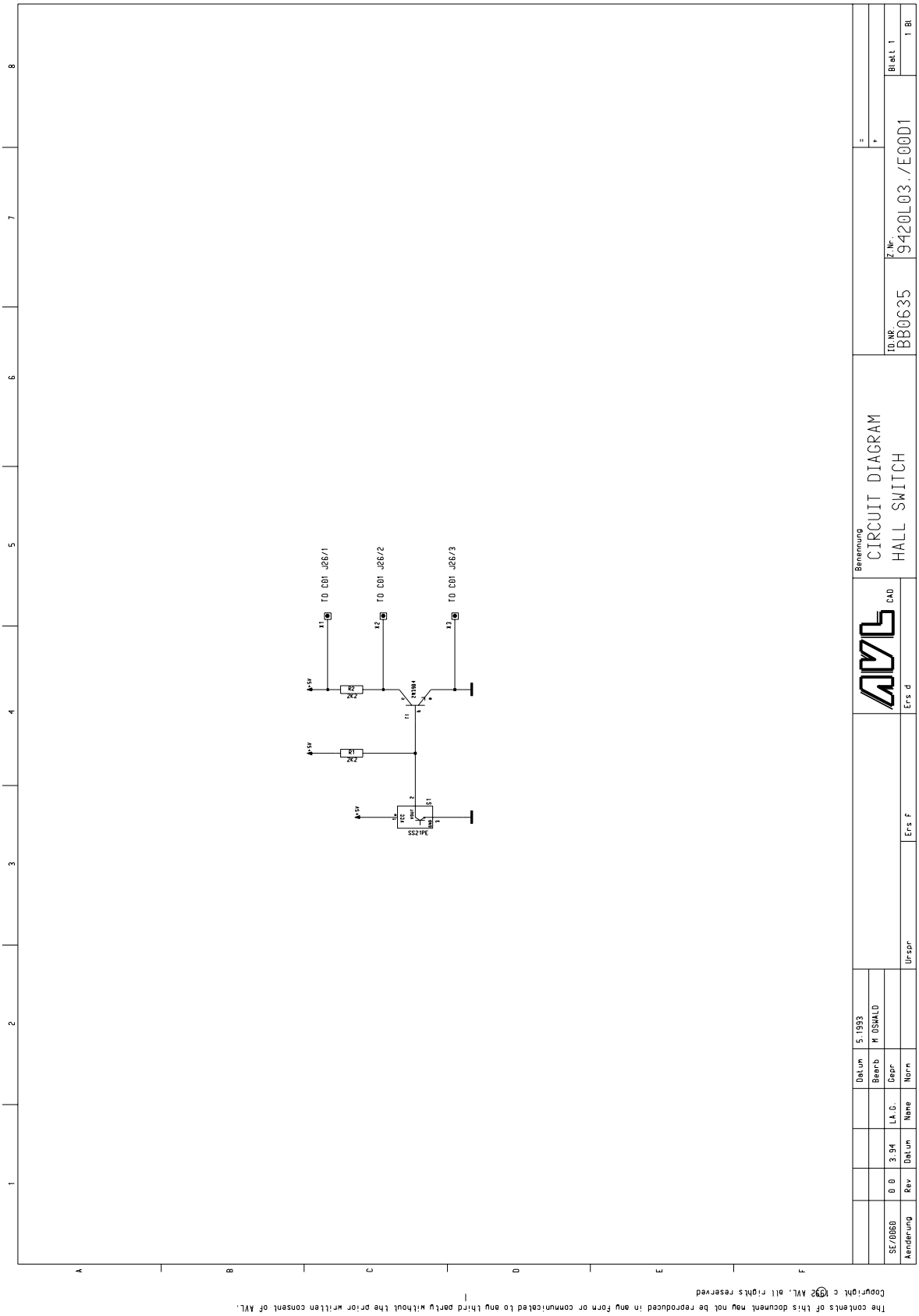

Hall Switch (AVL Compact 1, 2 and 3, with the exception of AVL Compact 1 up to SN 1000)

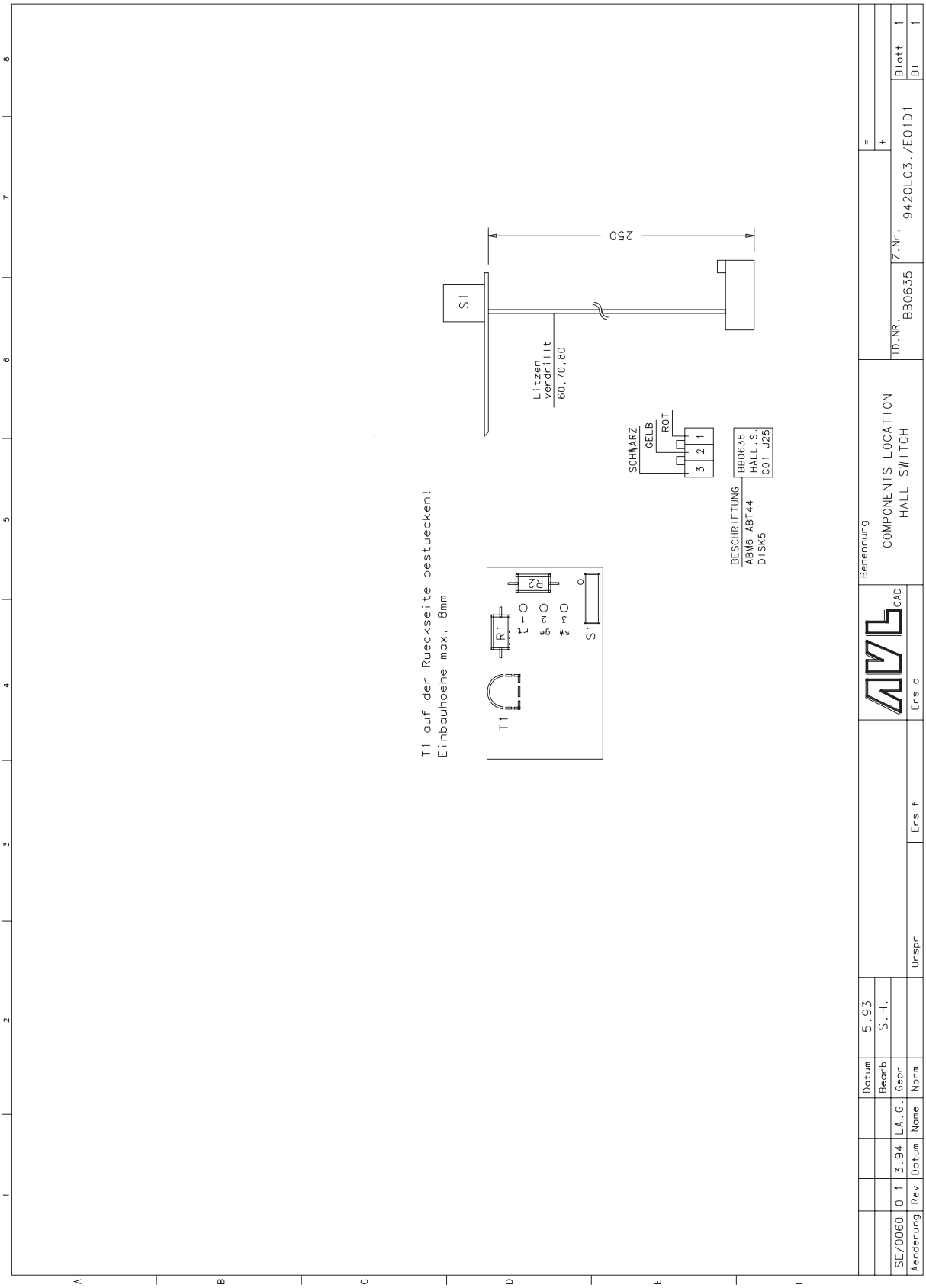

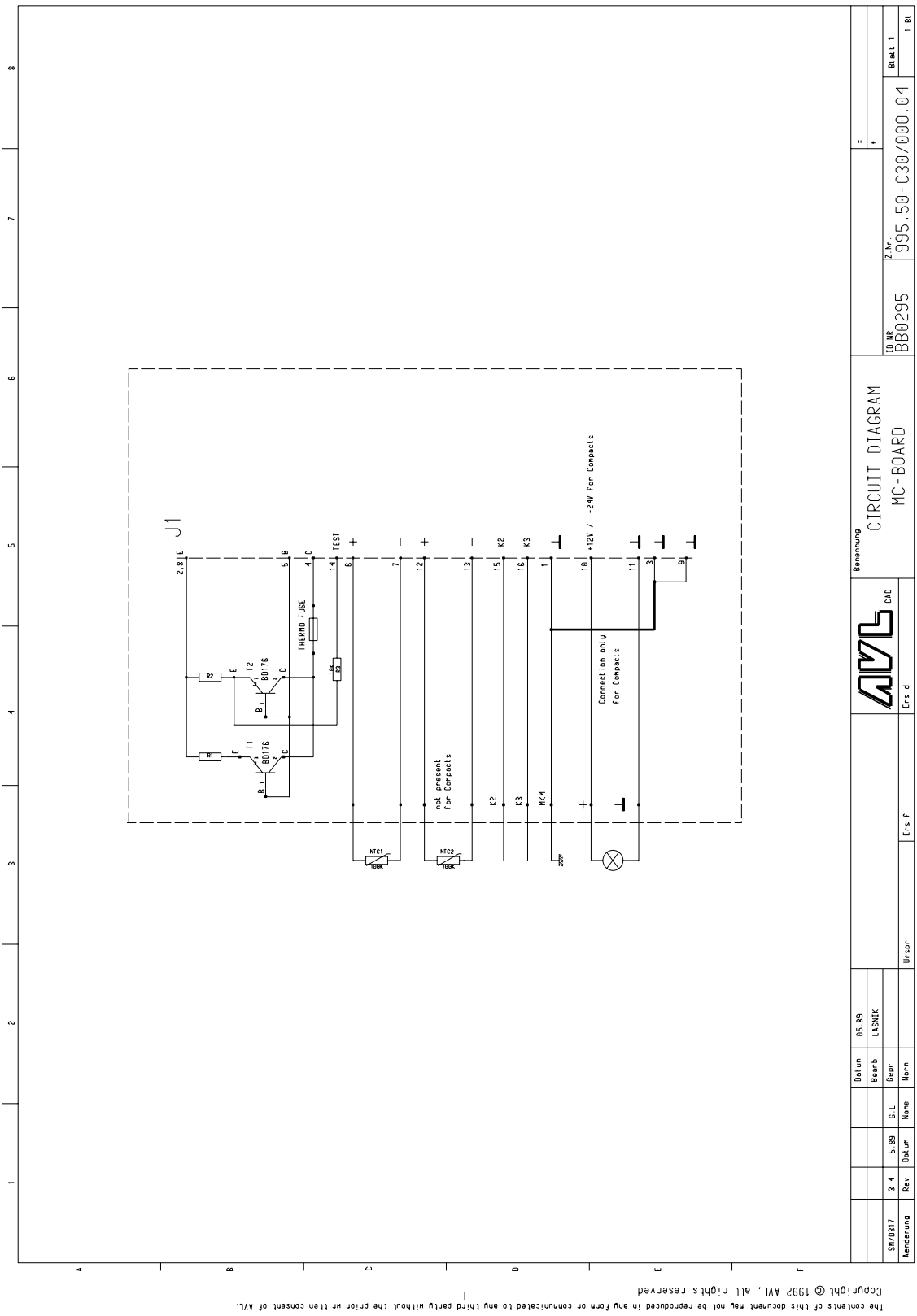

MC-Board

Ident number for AVL COMPACT 1 to SN 1000: **BB0580**

Ident number for AVL COMPACT 1 from SN 1000 on, AVL COMPACT 2 and 3: **BB0639**

Wiring - AVL Compact COBA Control Board - measuring chamber

AVL Compact 1 from SN 1000 on AVL Compact 2 and 3				AVL Compact 1 up to SN 1000
Coba Control Board 9420L01 9430L01	**C2-Connector Board 9420C01**		**MC Board 995.50C30**	**Coba Control Board 9410L01**
J7	**J2**	**J28**	**J1**	**J20**
			1	1
28	28	1	2	16
14	14	9	3	2
27	27	2	4	15
15	15	10	5	3
26	26	3	6	14
16	16	11	7	4
25	25	4	8	13
17	17	12	9	5
24	24	5	10	12
18	18	13	11	6
23	23	6	12	11
19	19	14	13	7
22	22	7	14	10
20	20	15	15	8
21	21	8	16	9

Appendix

The following circuit diagrams and component location diagrams are applicable for AVL Compact 1 and AVL Compact 2 with a serial number up to 1500.

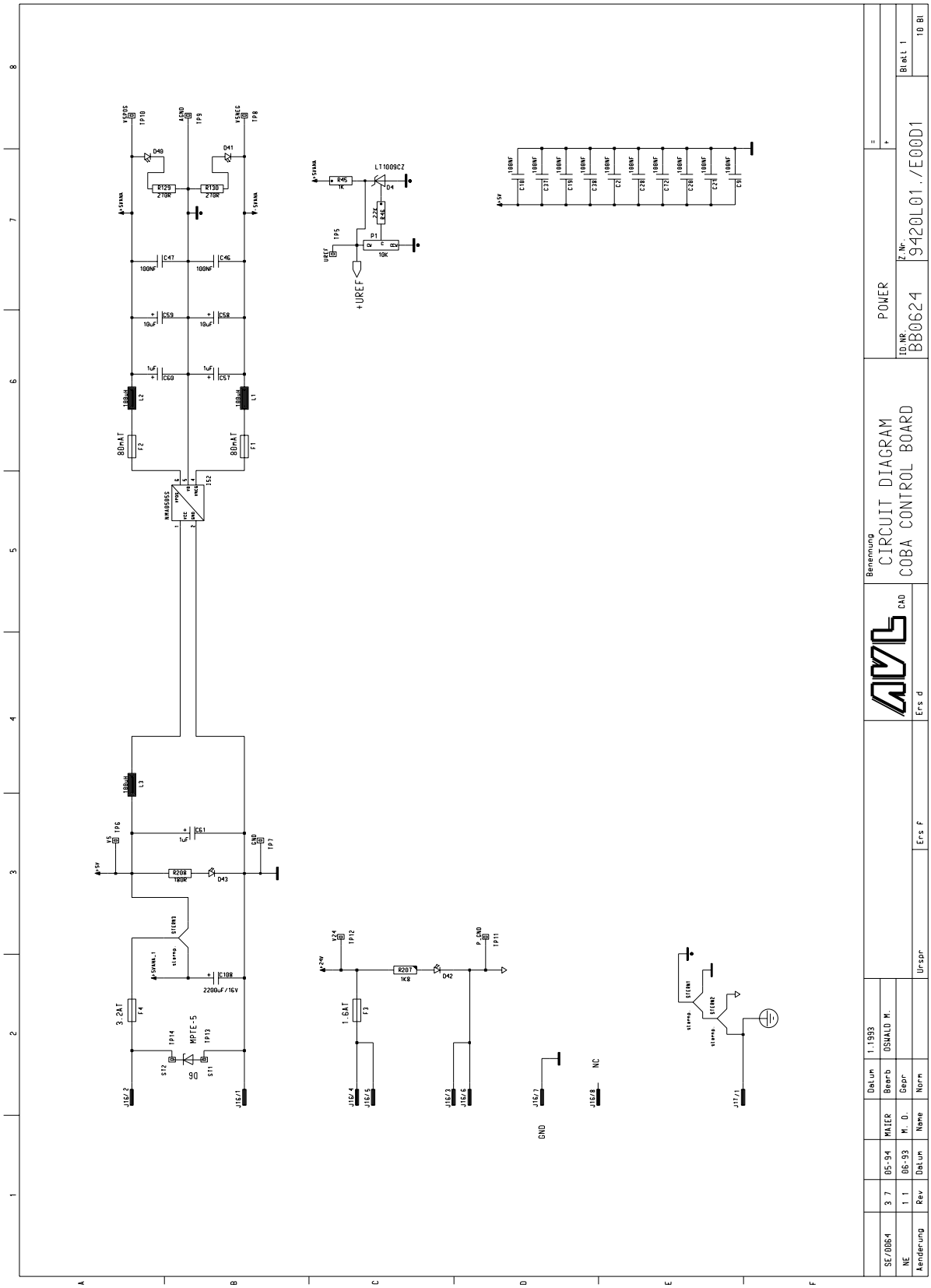

COBA Control Board (AVL Compact 1, SN 1001 up to 1500 and AVL Compact 2 up to SN 1500)

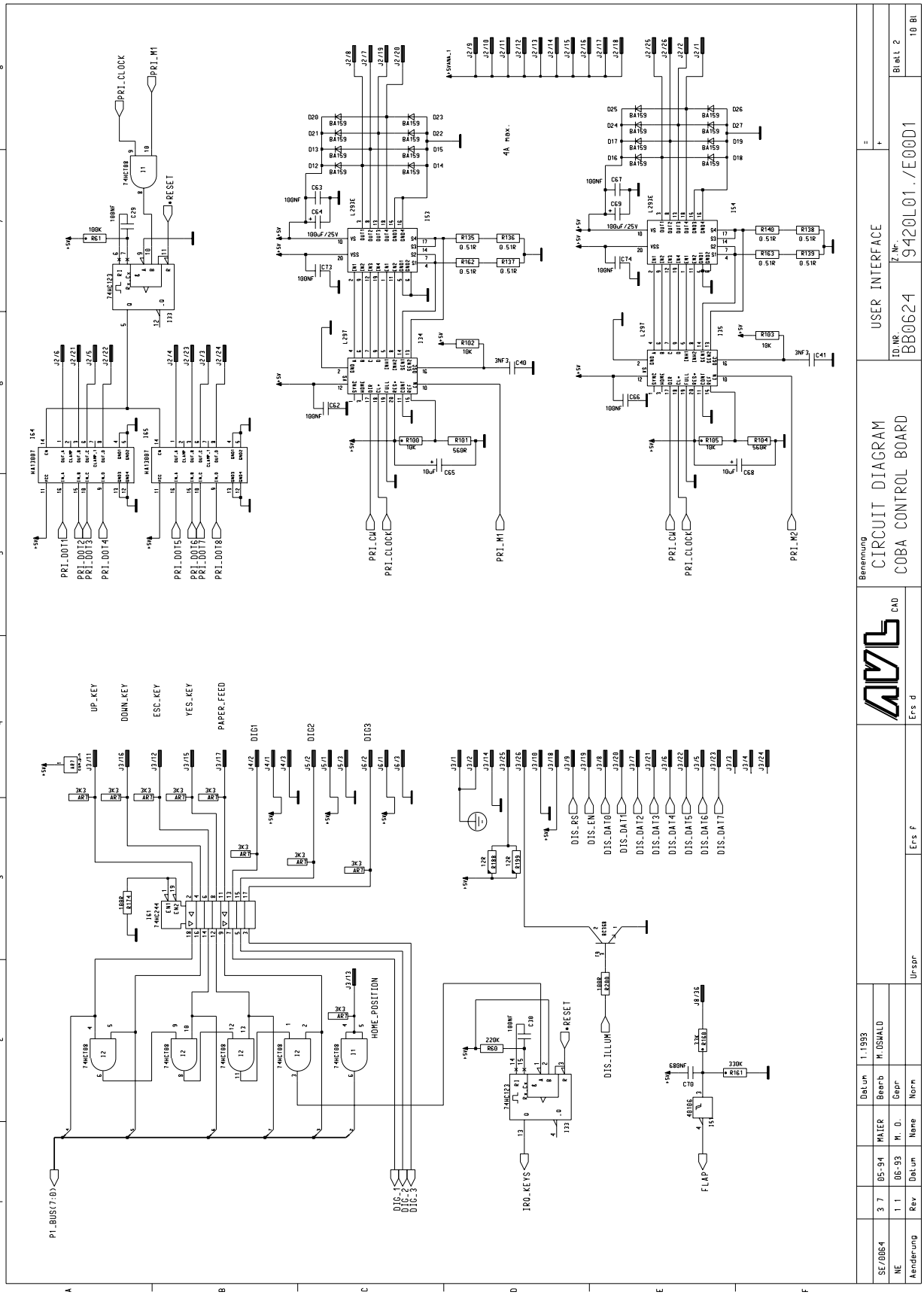

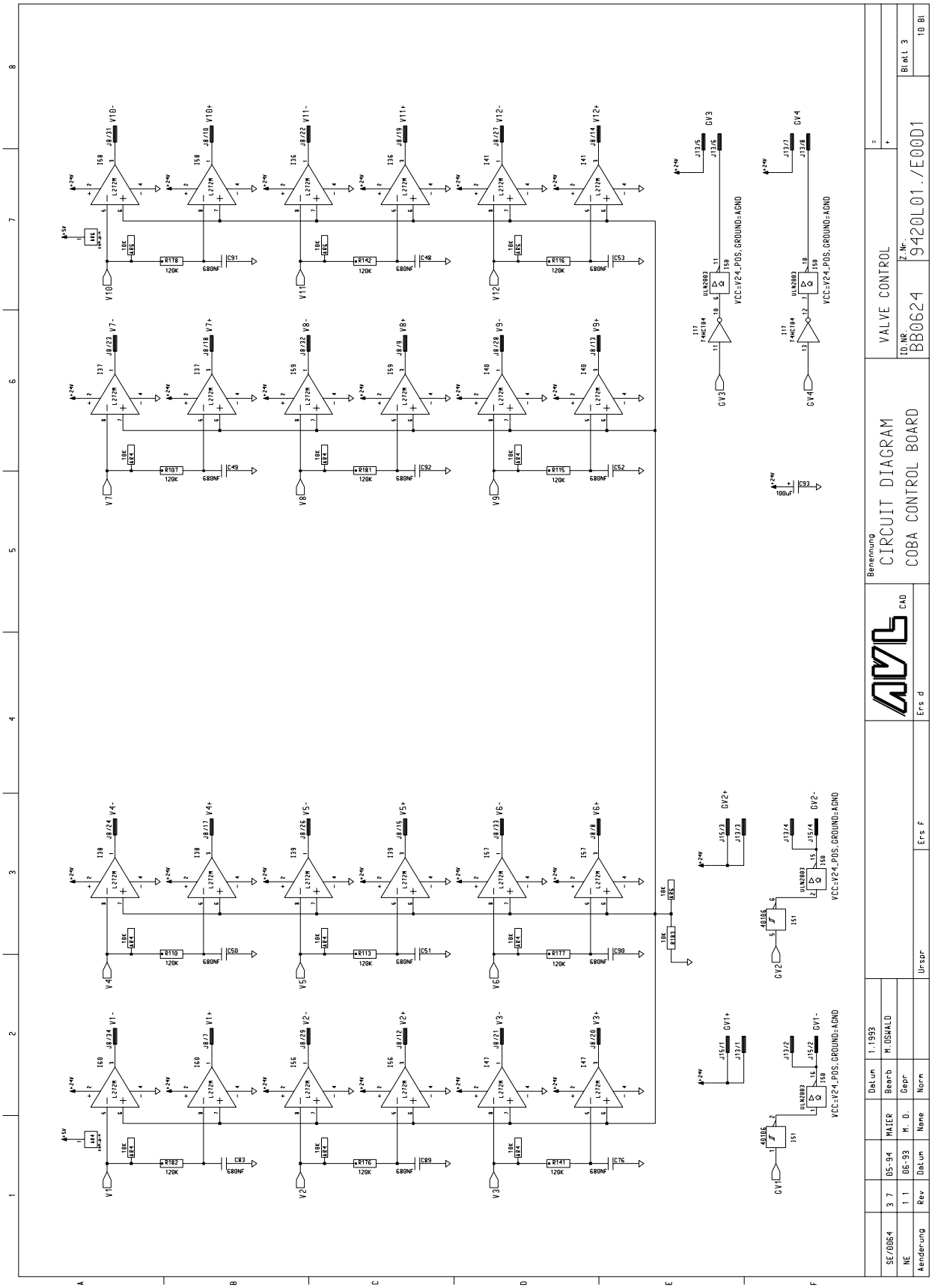

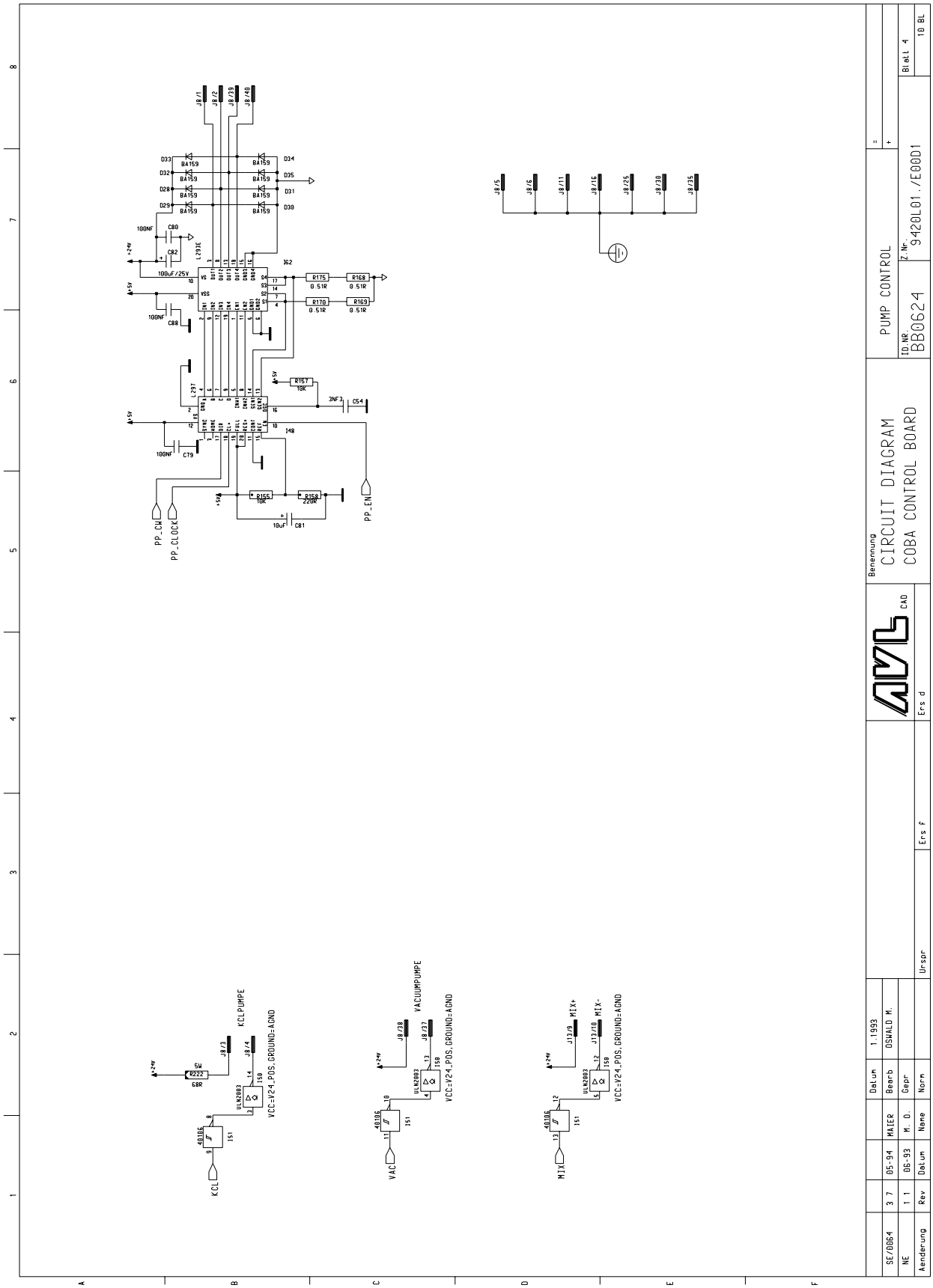

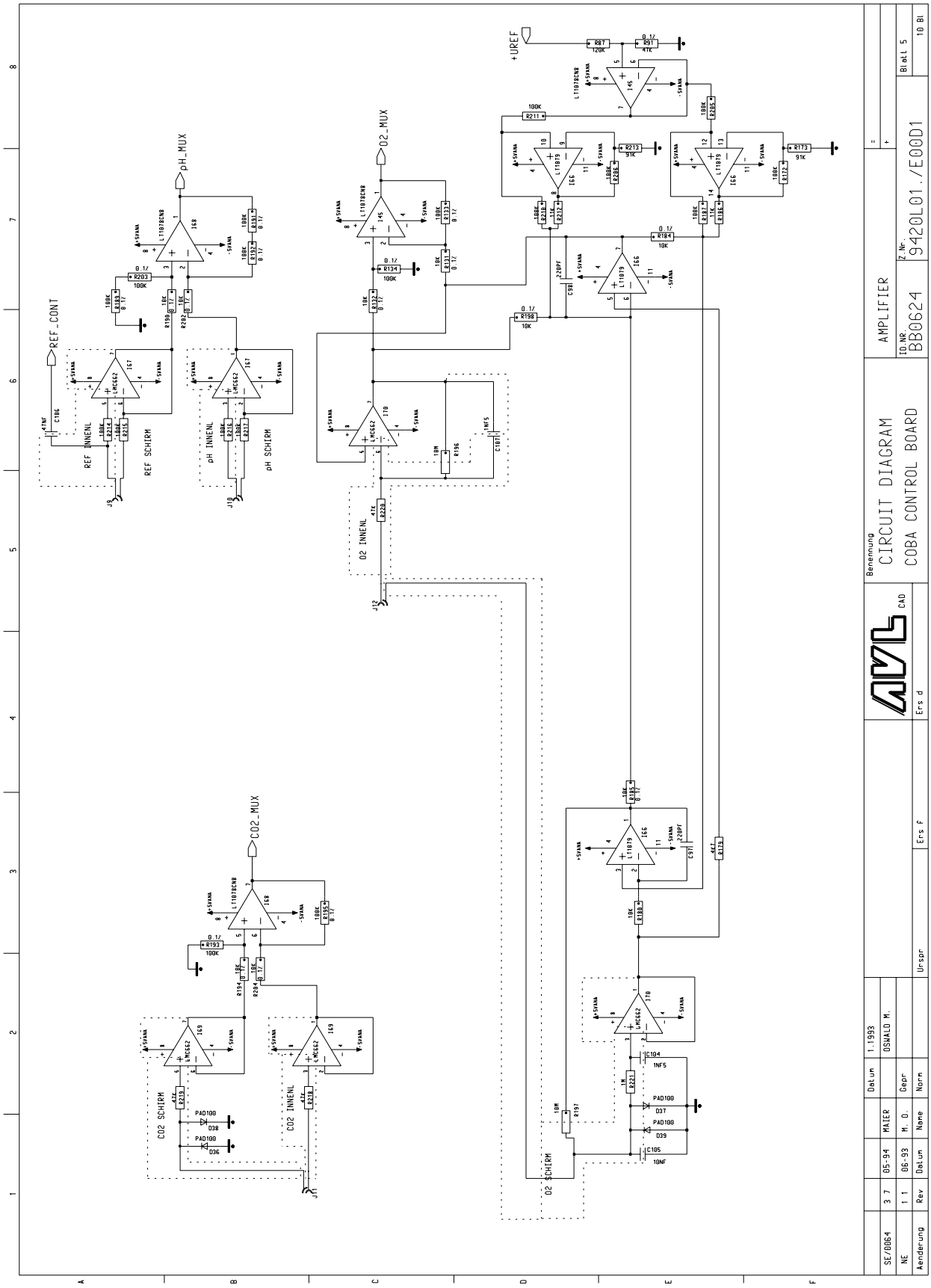

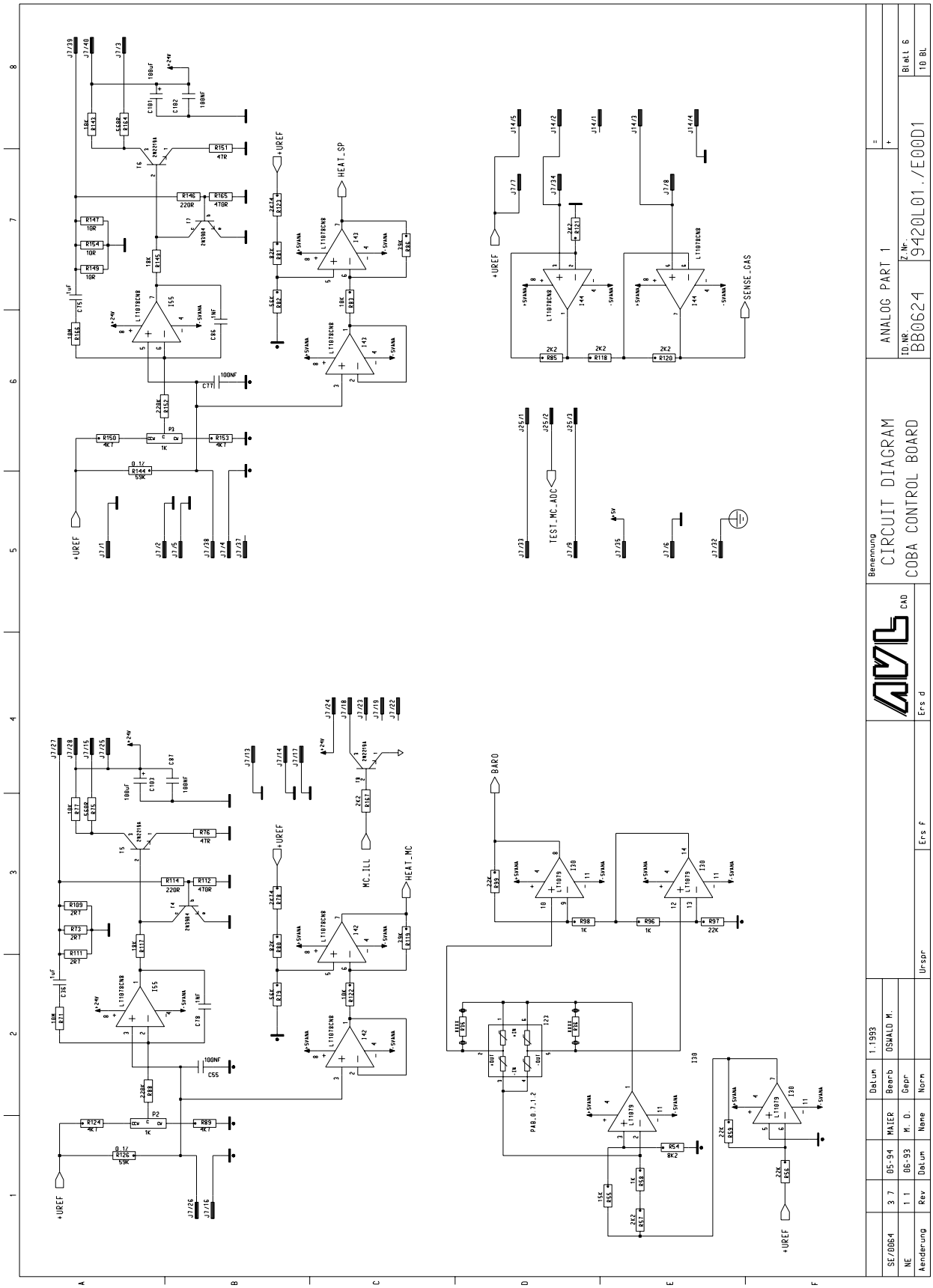

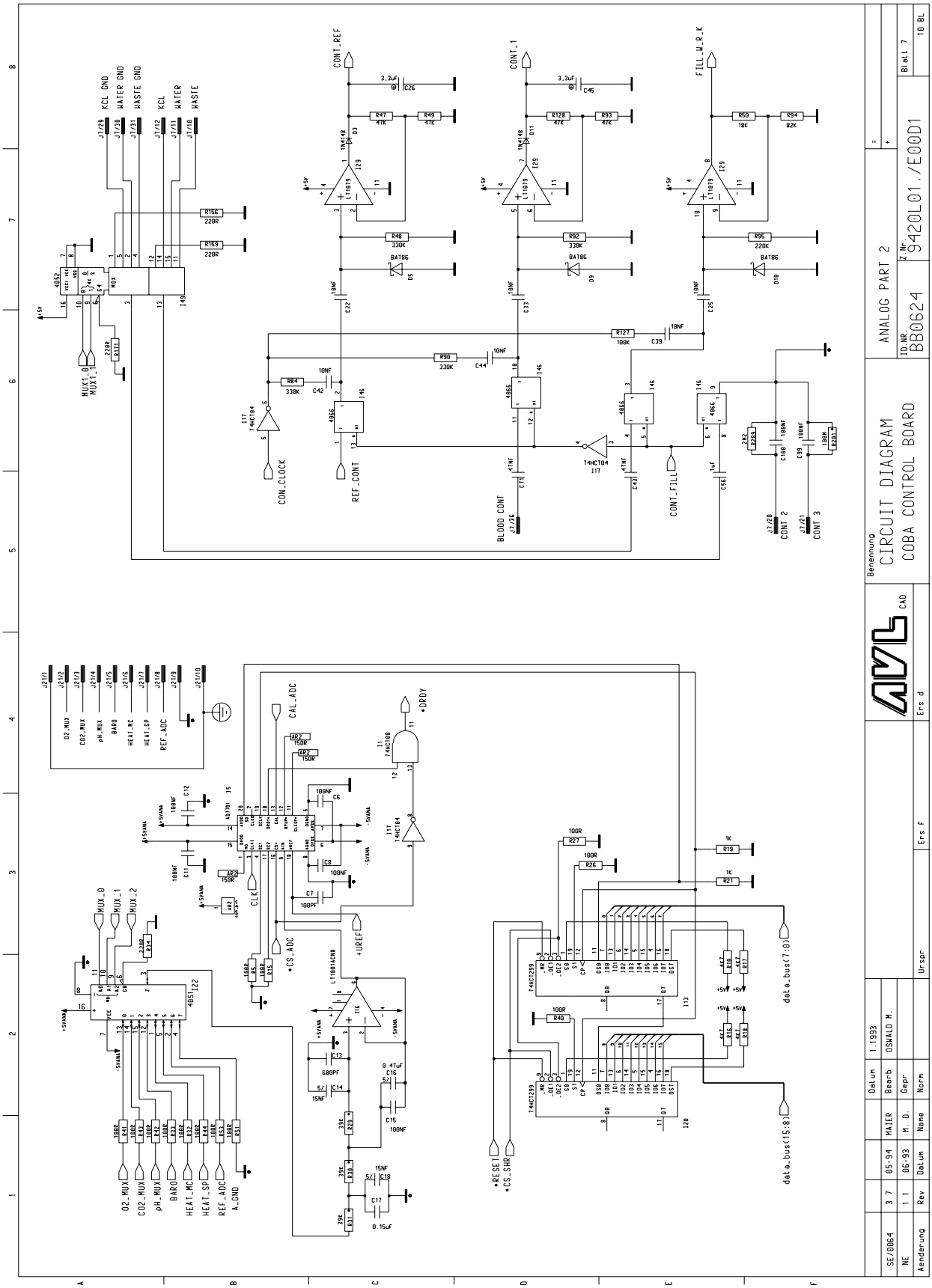

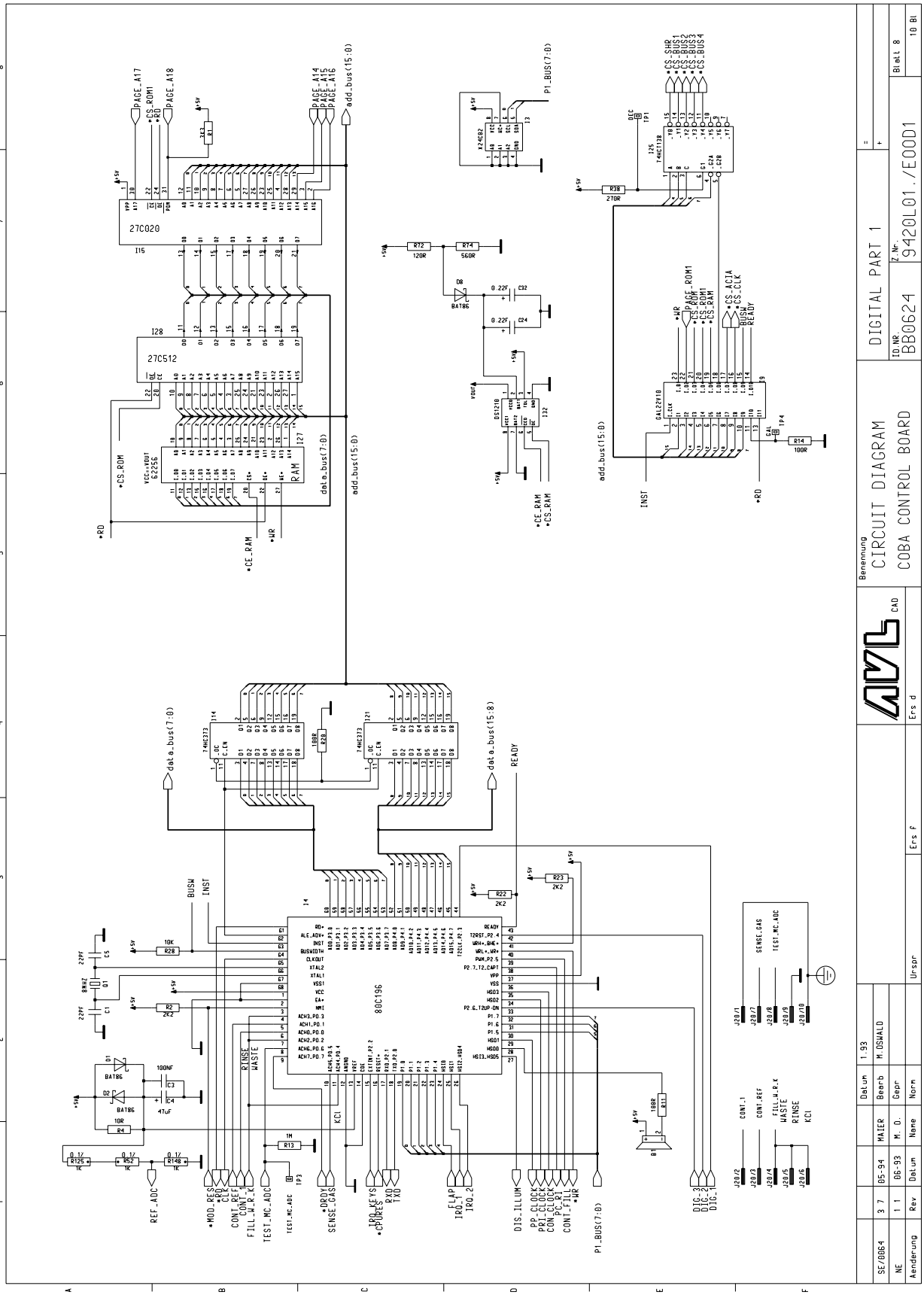

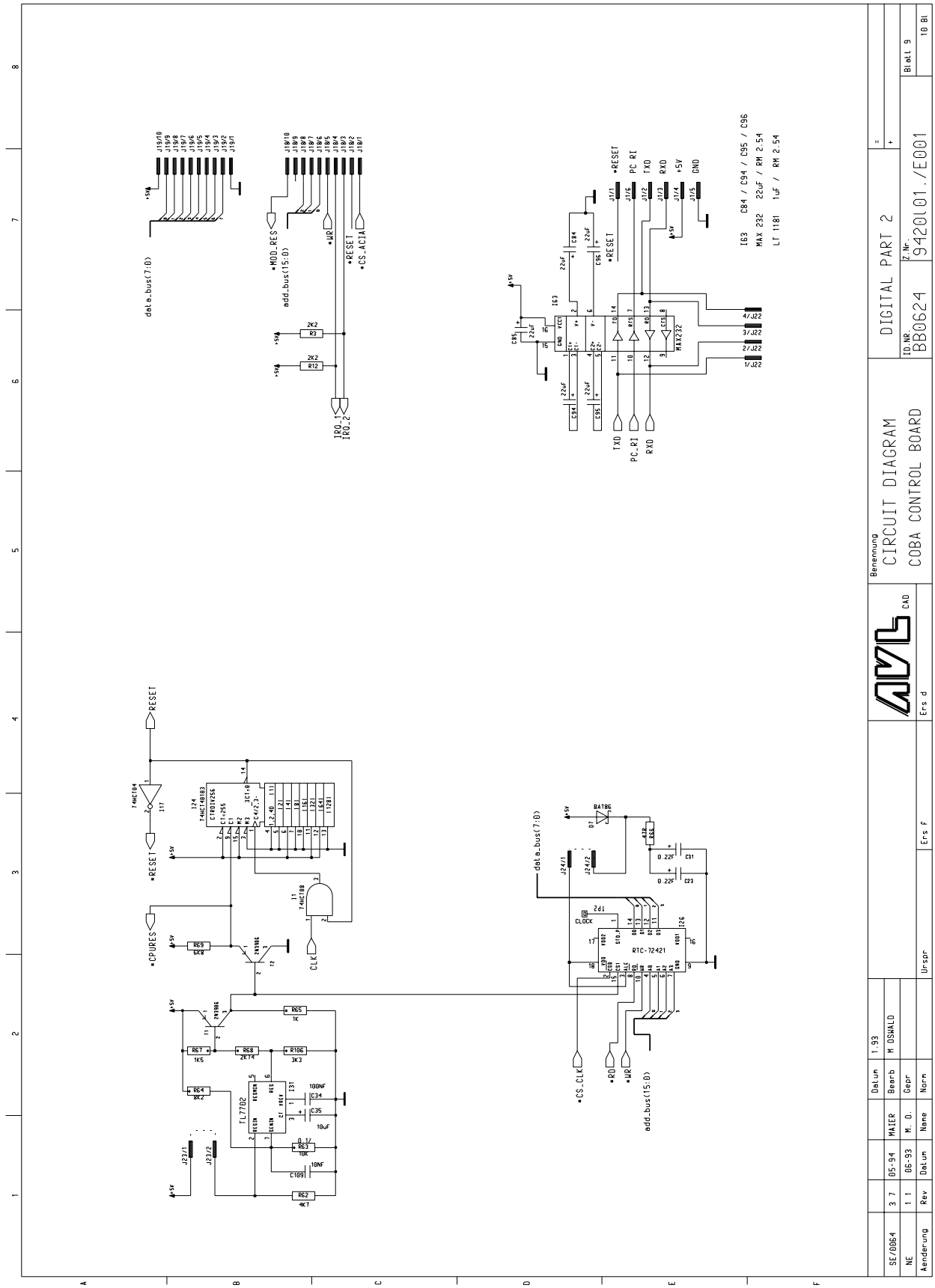

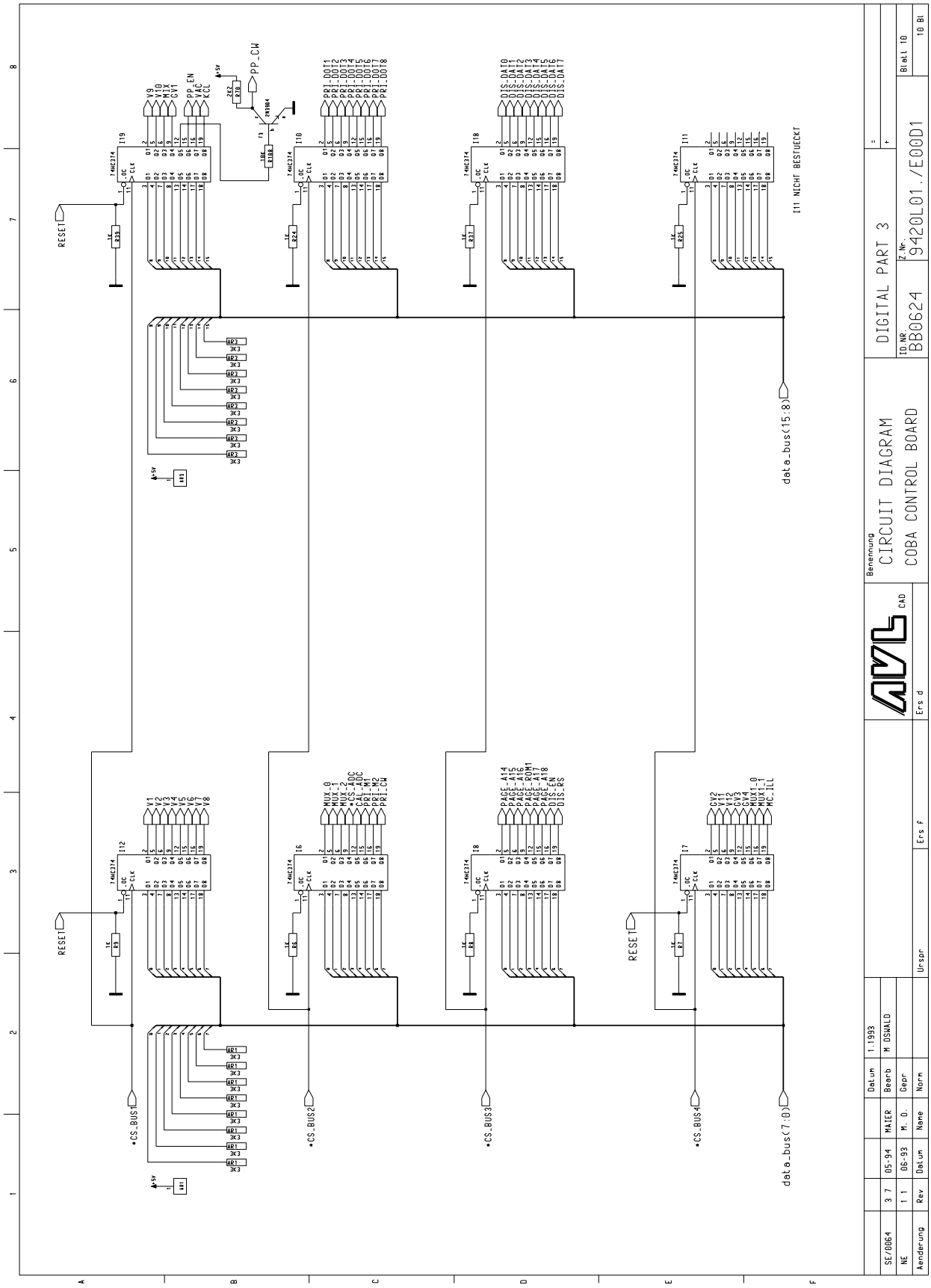

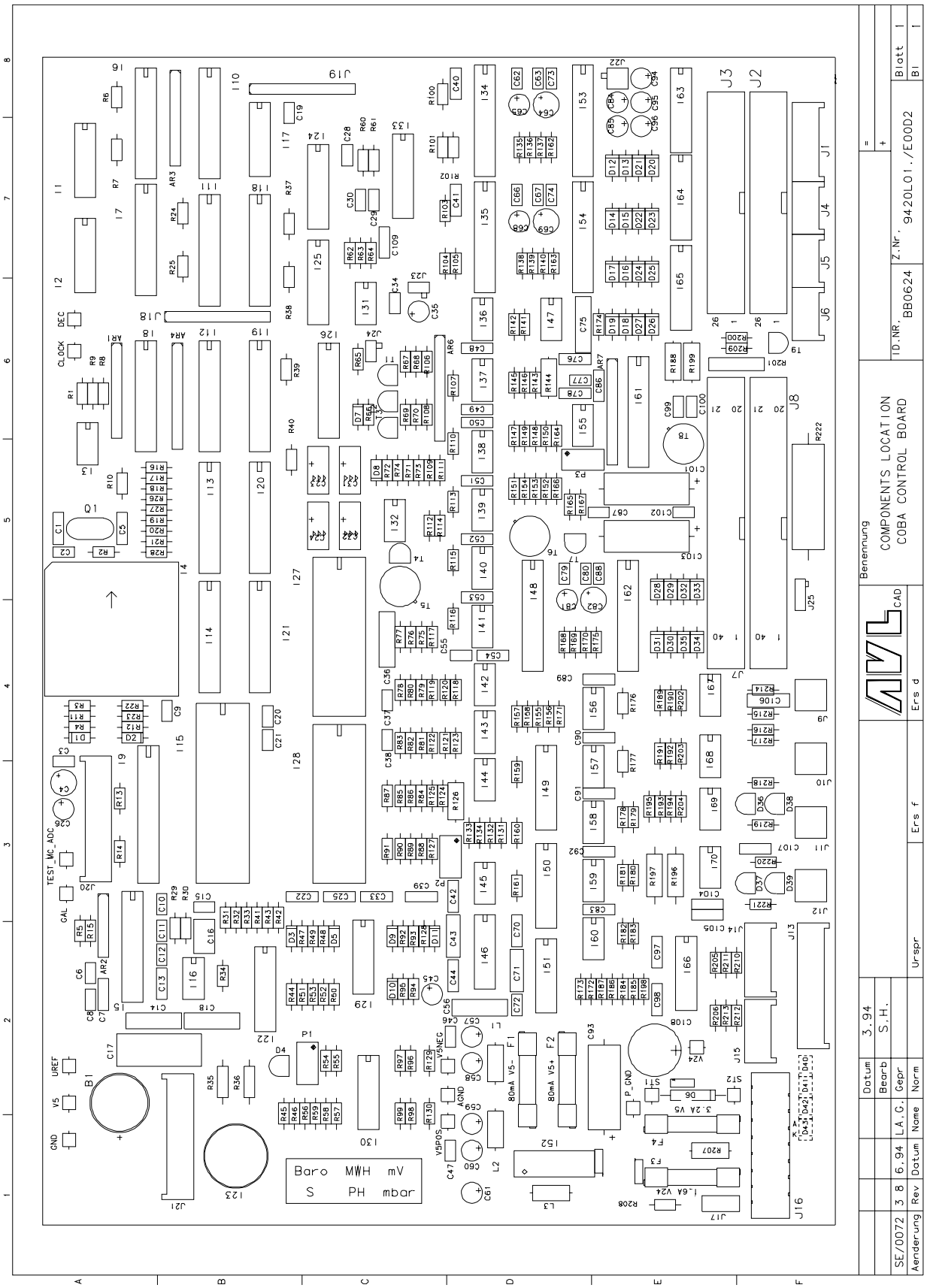

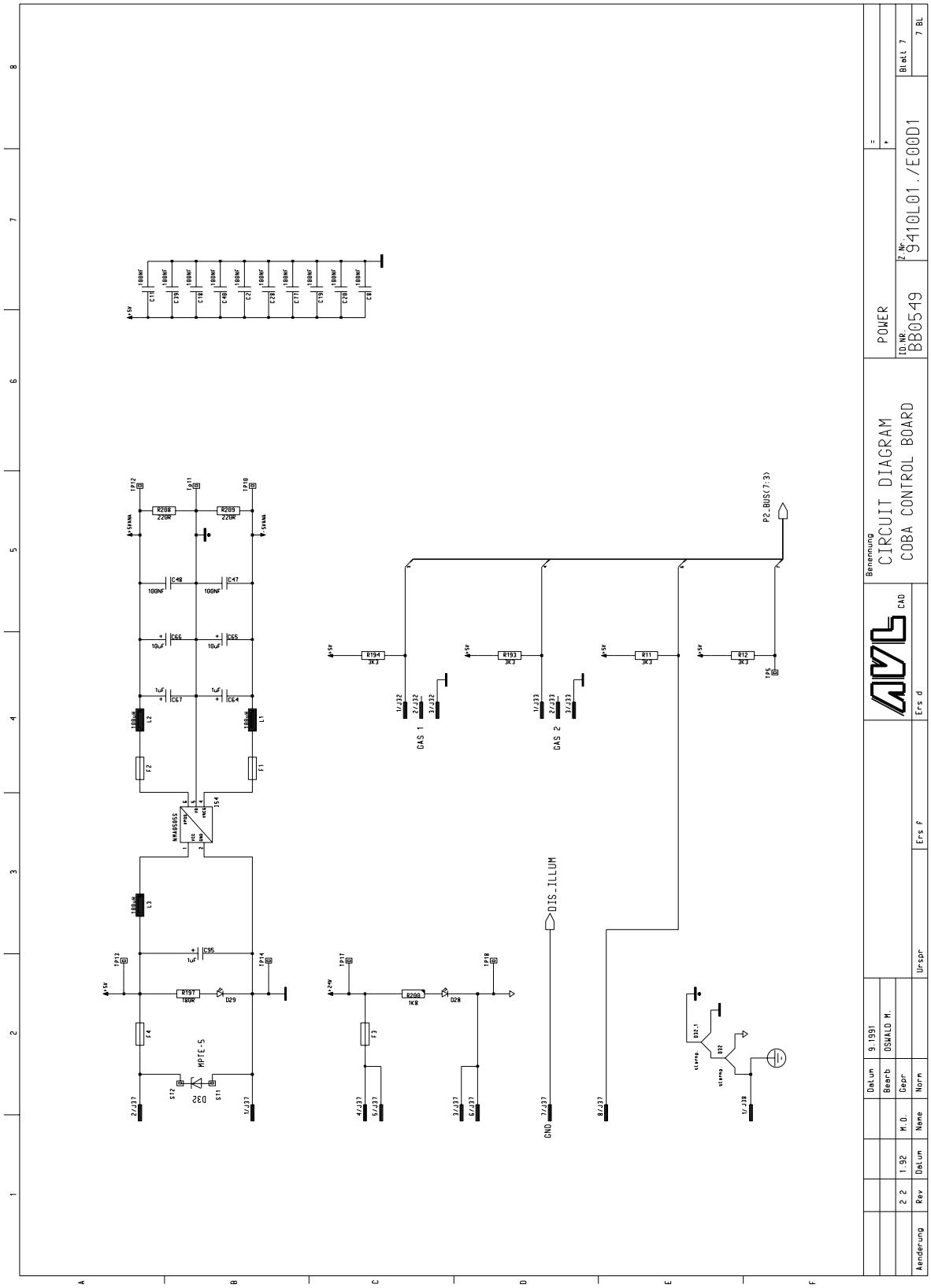

COBA Control Board (AVL Compact 1 up to SN 1000)

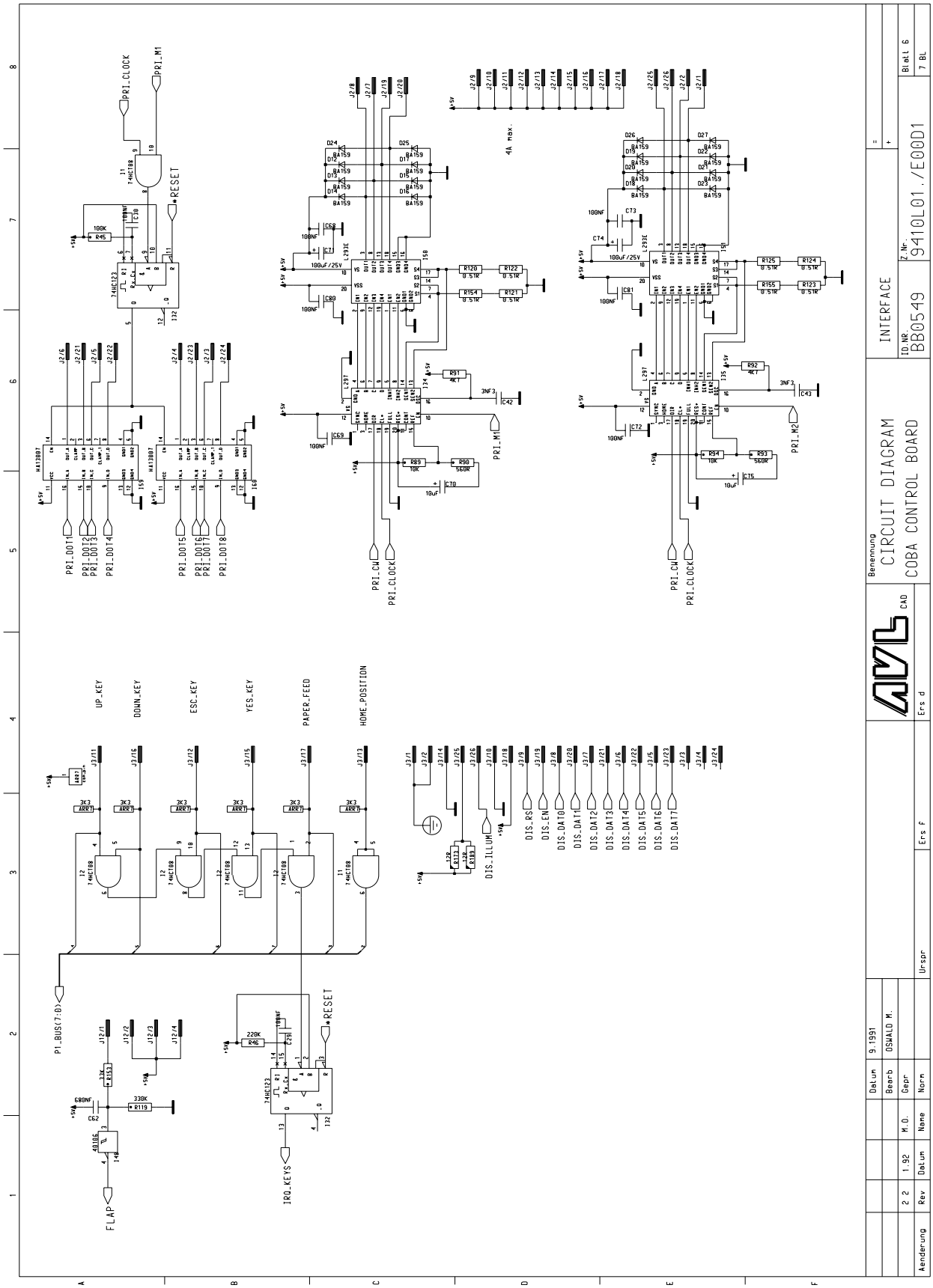

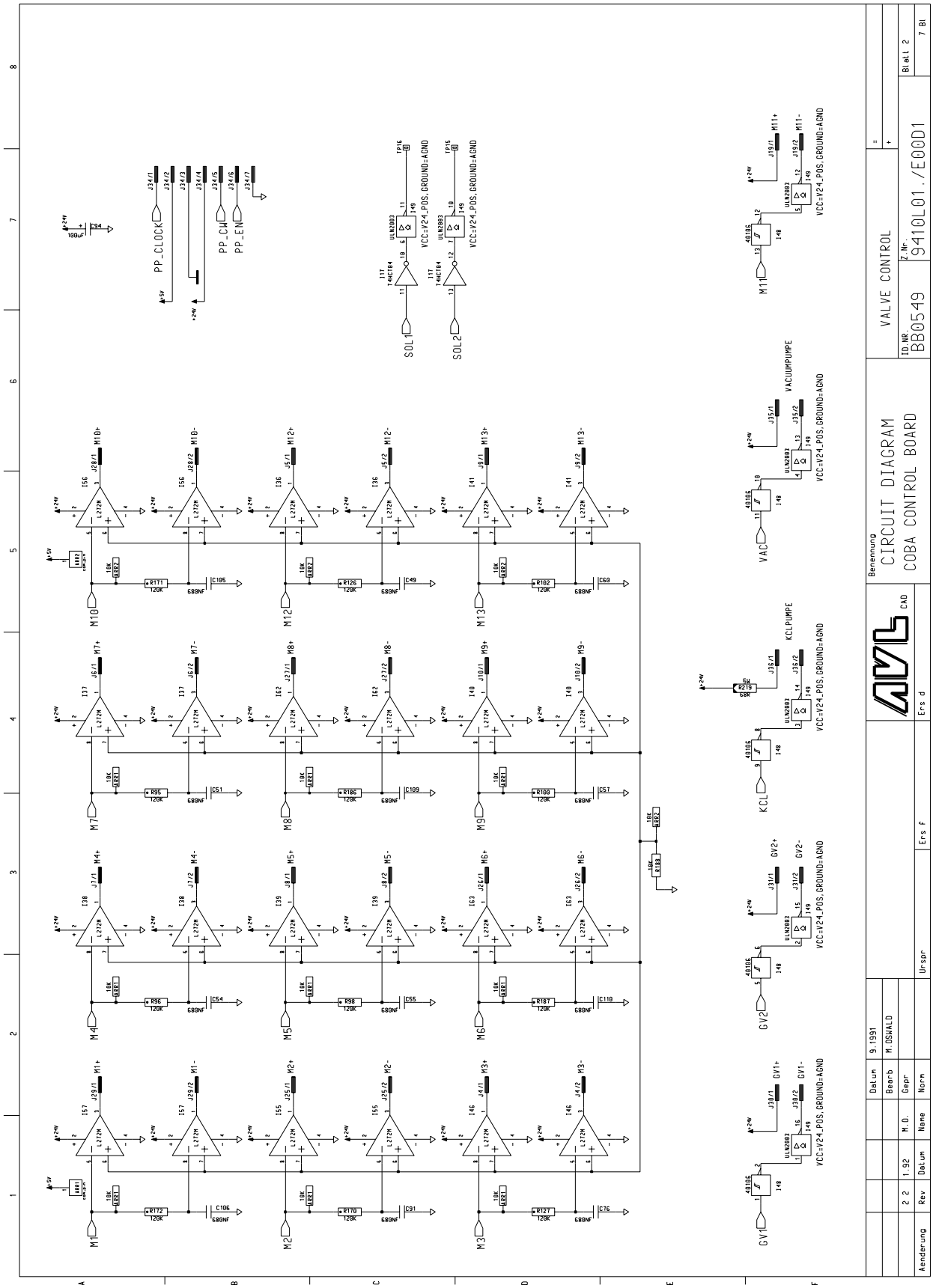

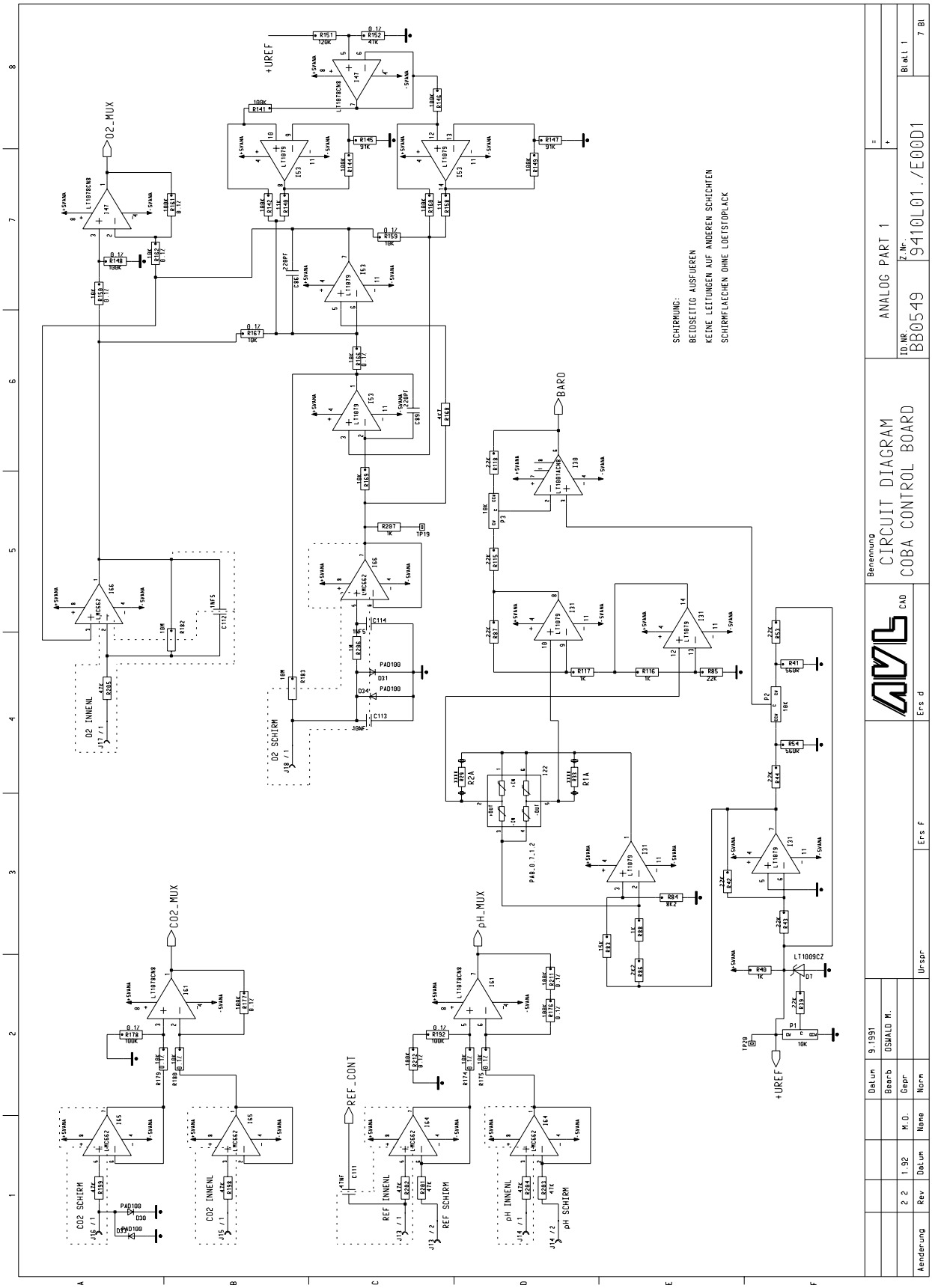

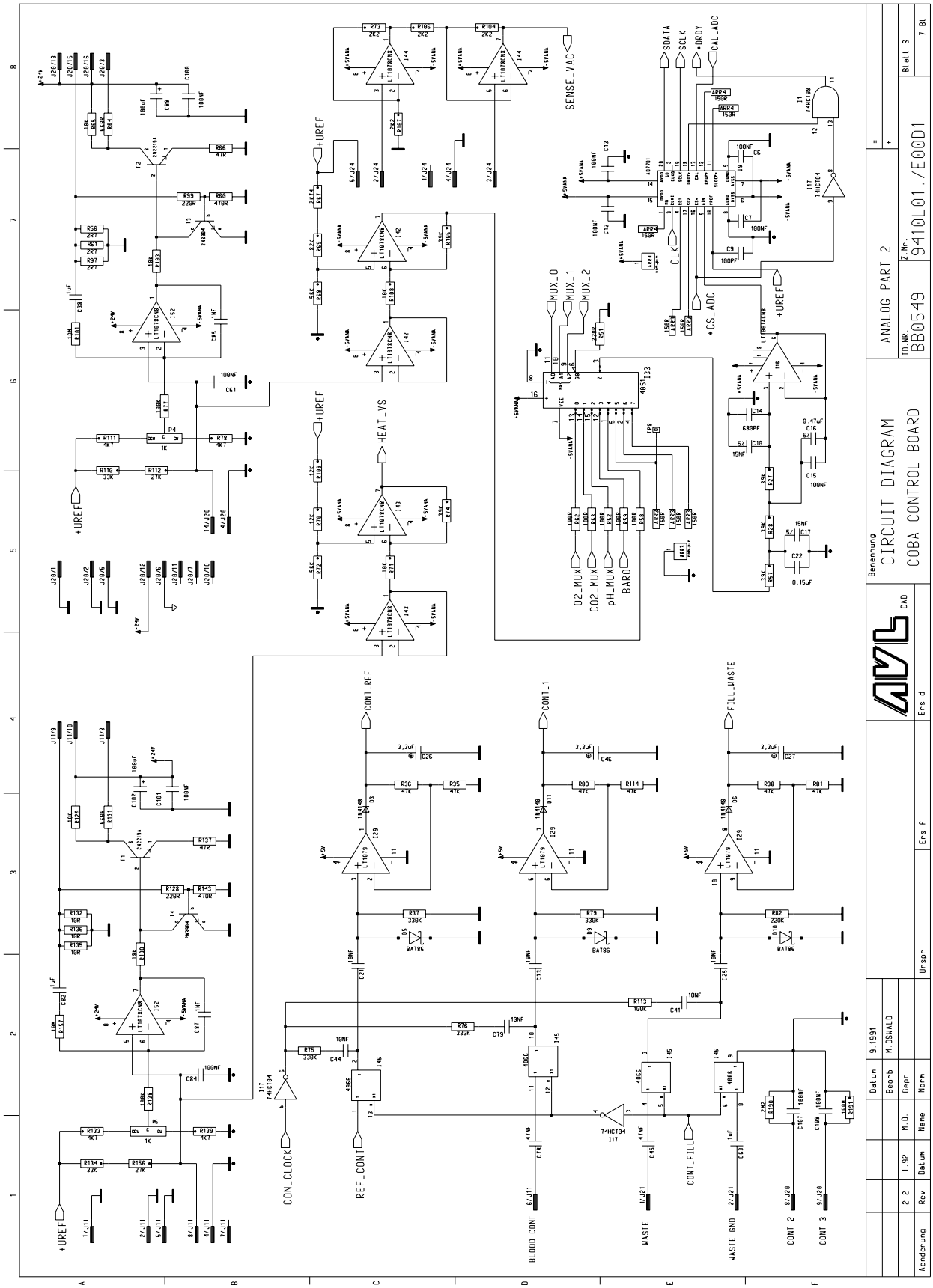

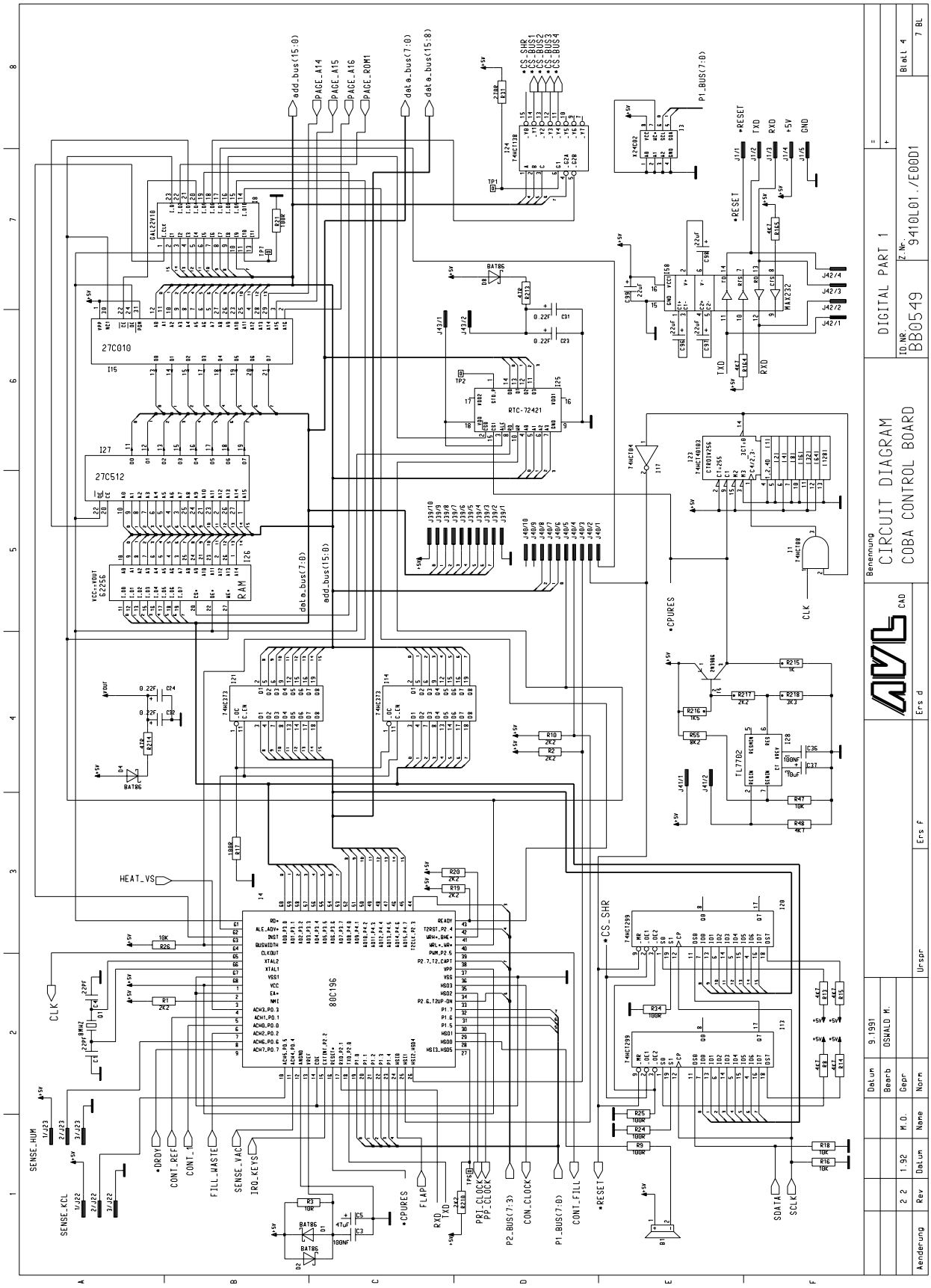

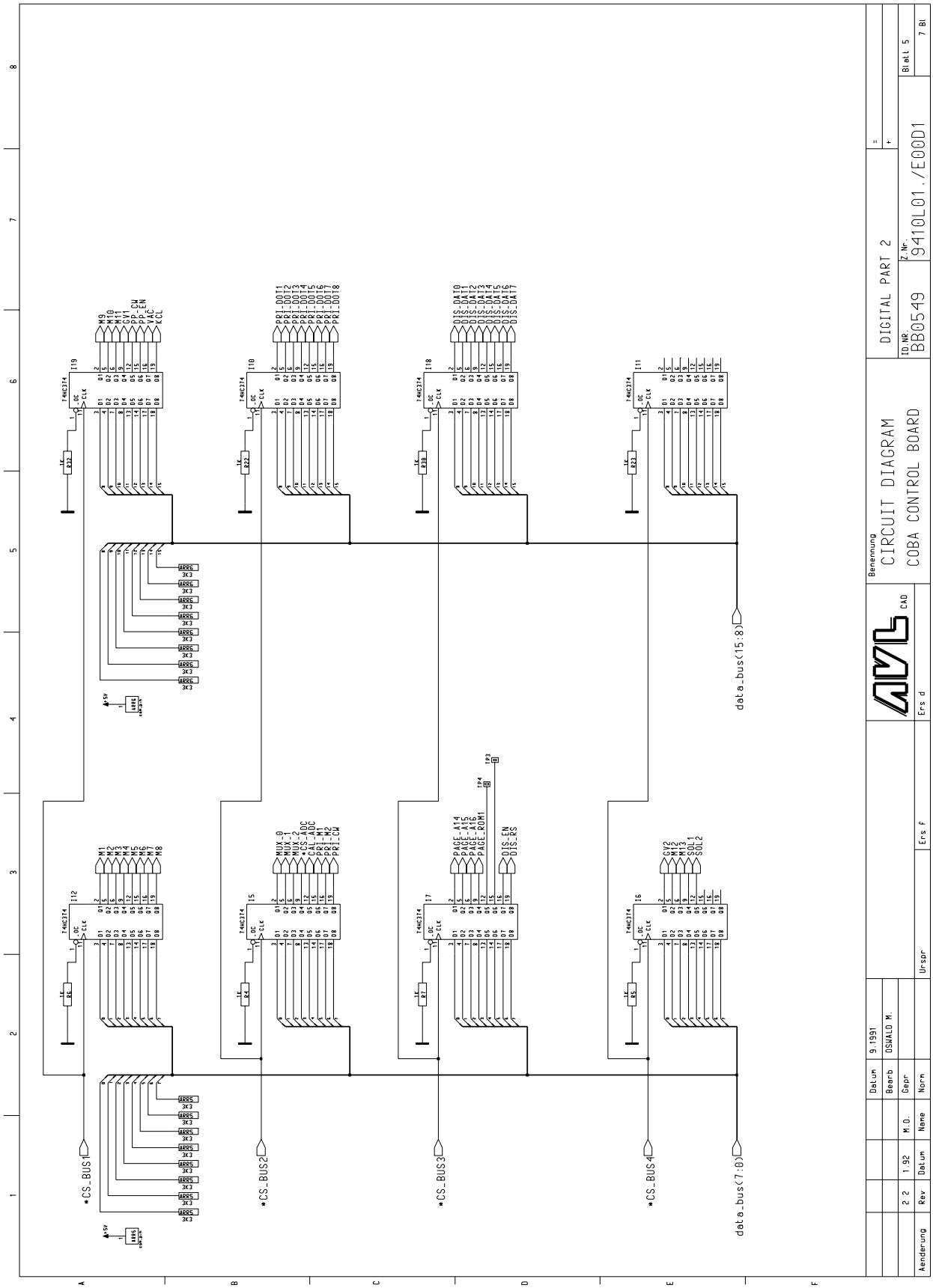

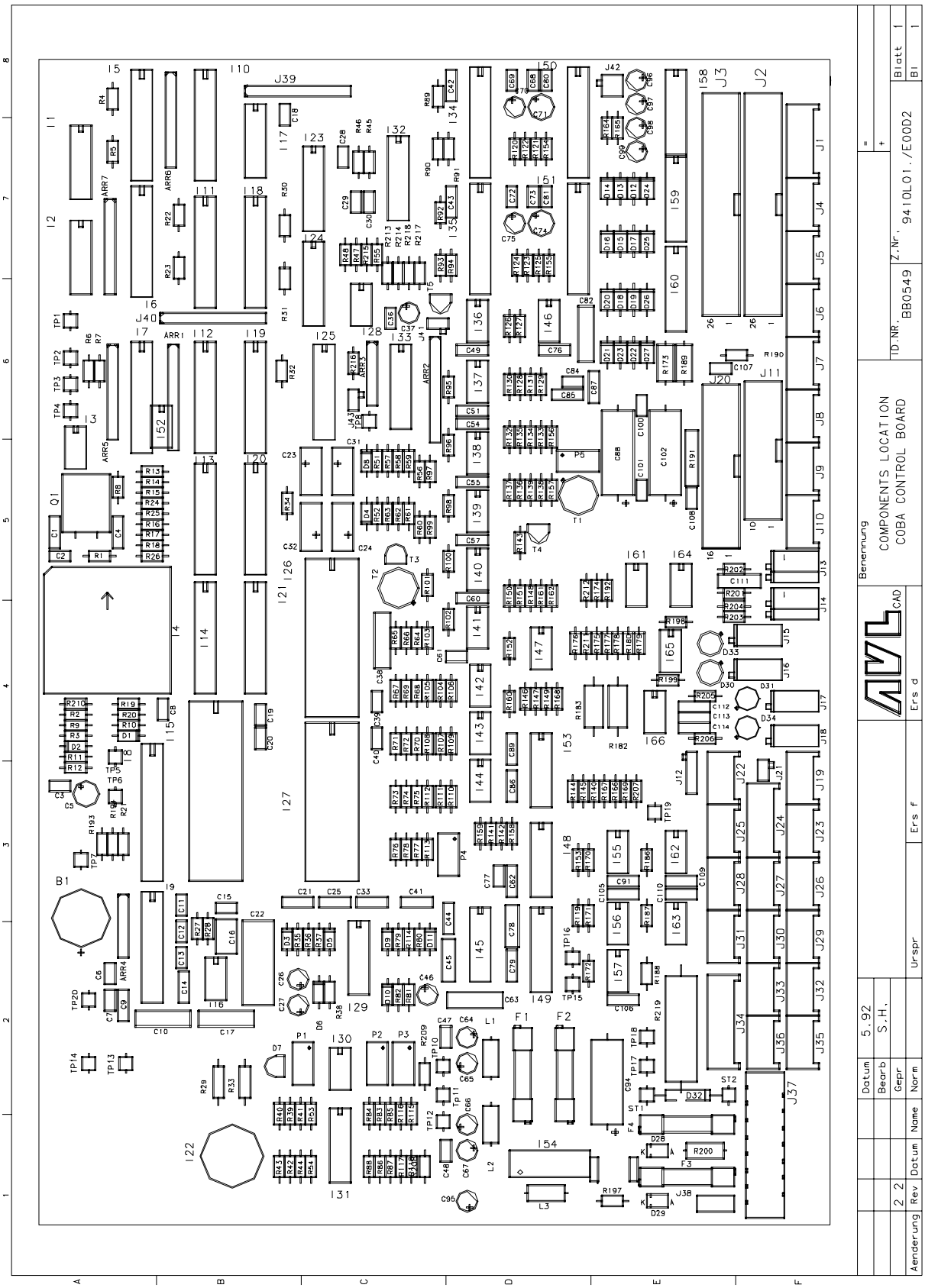

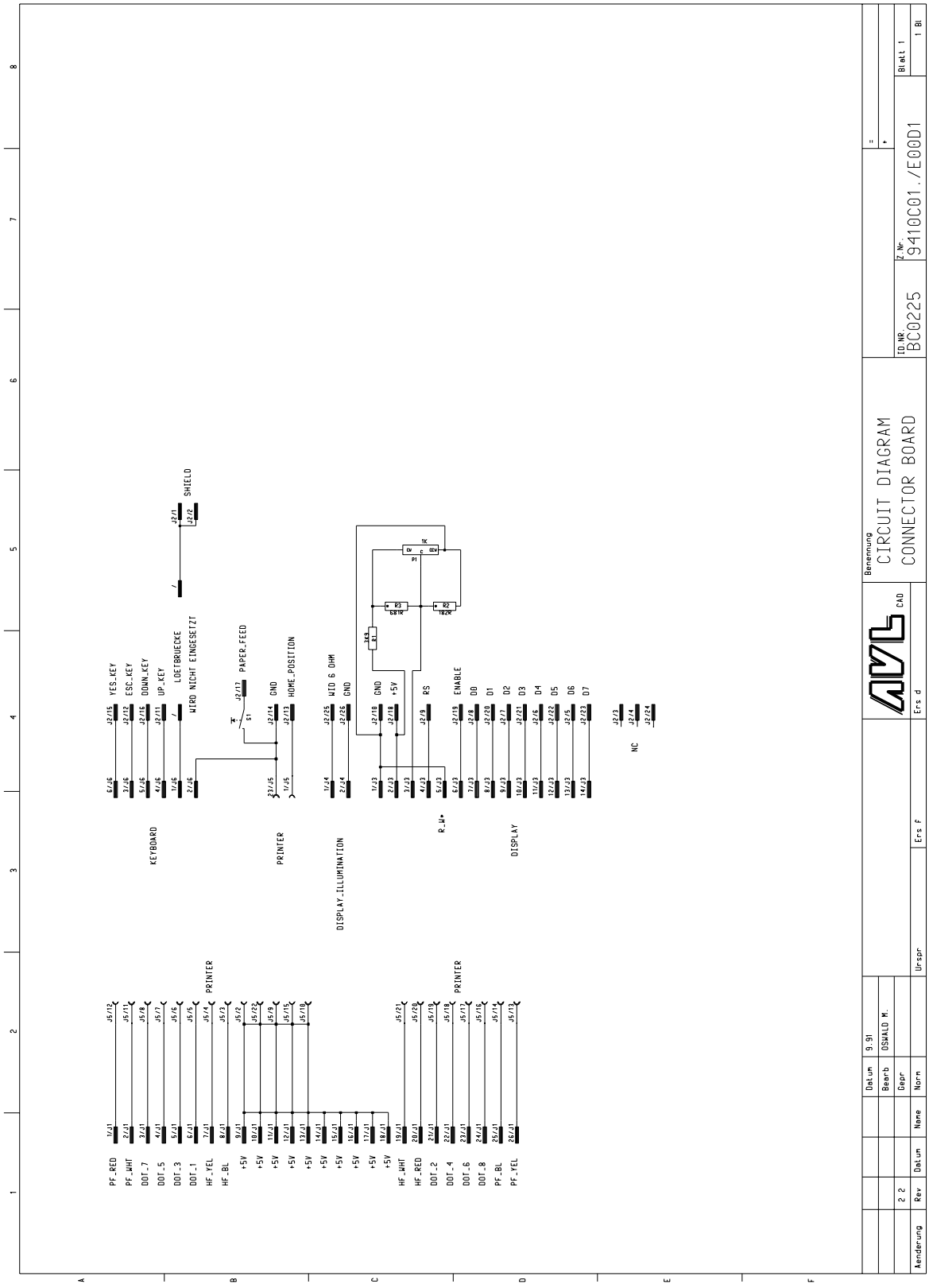

Connector Board (AVL Compact 1 from SN 1001 to SN 1500 and AVL Compact 2 up to SN 1500)

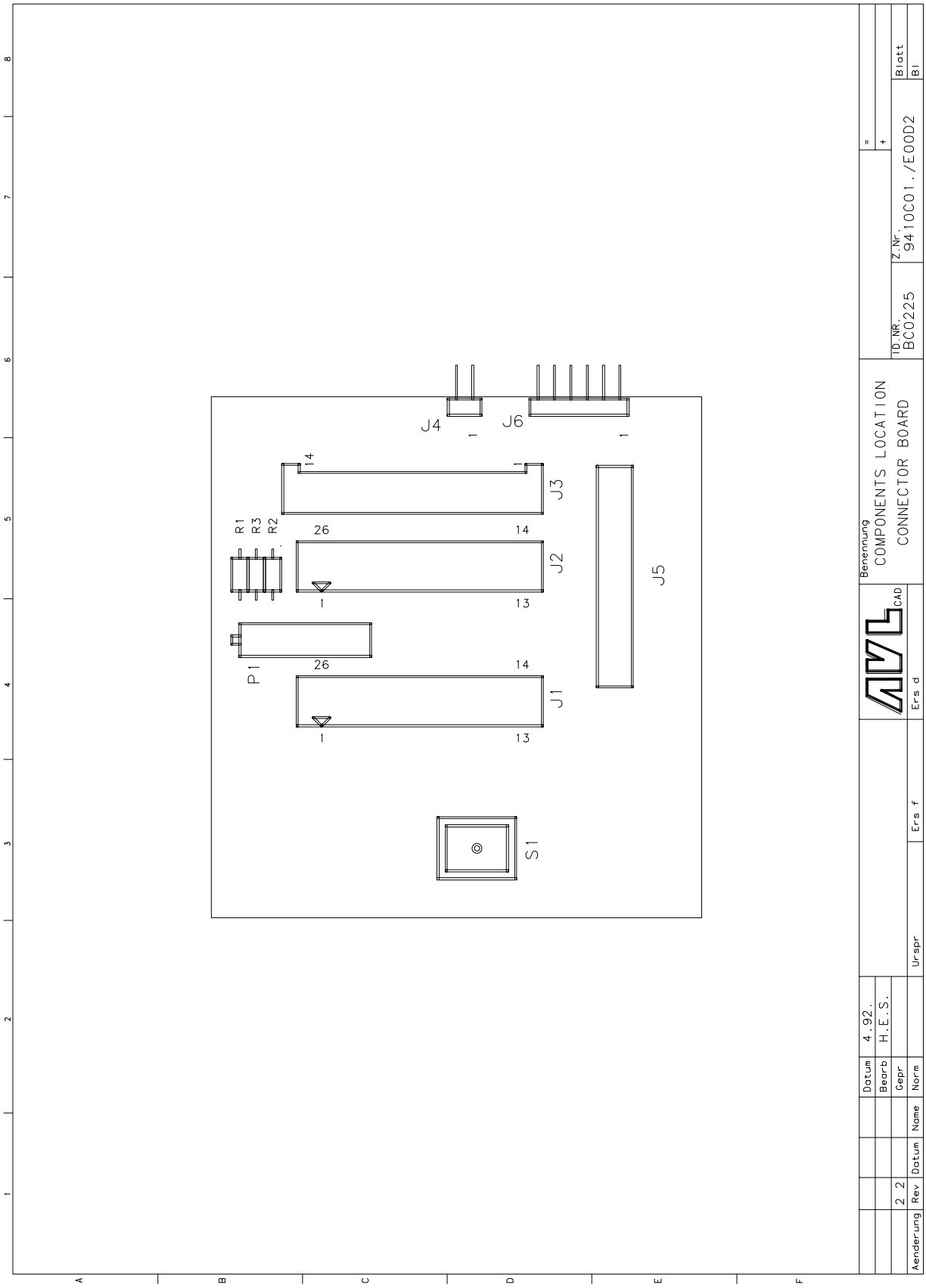

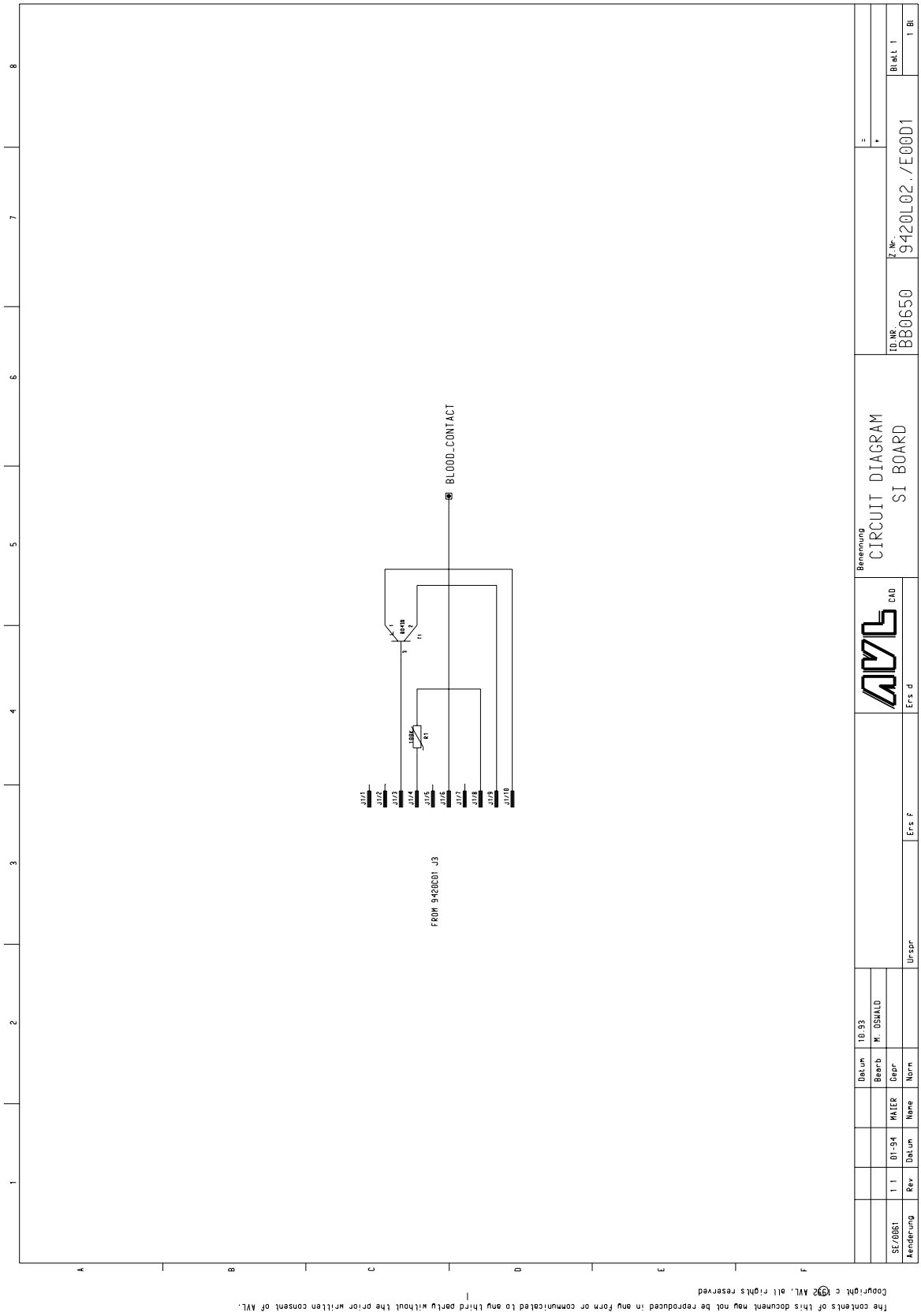

SI-Board (AVL Compact 1 up to SN 1500 and AVL Compact 2 up to SN 1500)

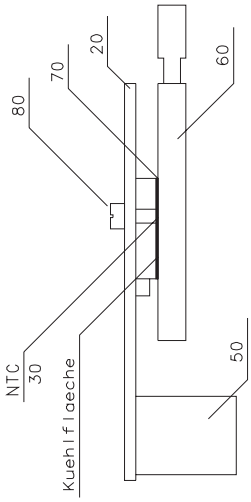

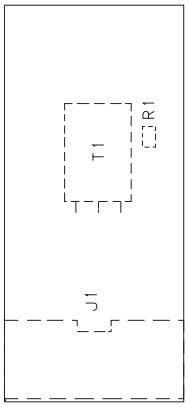

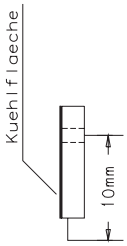

MONTAGEANLEITUNG
==========

1) Print mit J1 bestuecken.
2) T1 : Anschluesse laut Zeichnung biegen.
3) NTC - Bohrung im Heizblock mit Waermeleitpaste fuellen und NTC auf Anschlag einschieben.
4) Isolierfolie Pos.70 (ohne Waermeleitpaste) platzieren.
5) Den restlichen Heizblock mit Klarlack beschichten.
6) Print, Transistor, Isolierplaettchen und Heizblock laut Zeichnung verschrauben.
7) NTC - und Transistoranschluesse verloeten und Loetstellen mit Silikon isolieren.

Aenderung	Rev	Datum	Name		Datum	2.94		Benennung	COMPONENTS LOCATION SI - BOARD				
SE/0061	1 1	4.94	LA.G.	Gepr	Bearb	S.H.							
							Urspr	Ers f	Ers d	AVL CAD	ID.NR. BB0660	Z.Nr. 9420L02./E00D2	Blatt 1 / Bl 1