COULTER® HmX Hematology Analyzer
COULTER® HmX Hematology Analyzer with Autoloader

Service Manual

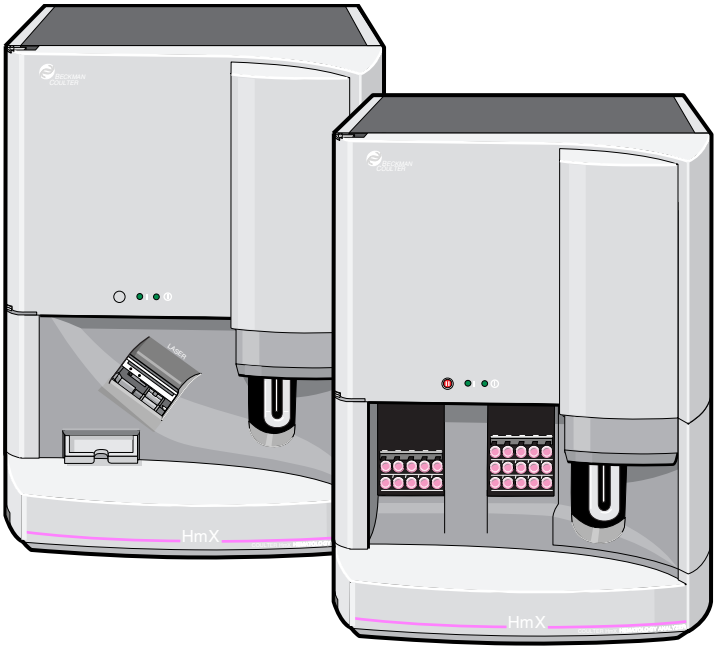

PN 4237535B (August 2000)

COULTER CORPORATION
A Beckman Coulter Company
Miami, Florida 33196-2500 USA

BECKMAN COULTER™

LEGAL NOTICES

Beckman Coulter, Inc. makes no representation that, upon furnishing this service manual, the holder of the manual will have the necessary technical capabilities and know-how to properly troubleshoot and repair any of the equipment specified in the manual. Beckman Coulter, Inc. assumes no liability whatsoever, including consequential and incidental damages, resulting from improper operation of Beckman Coulter instruments after maintenance of Beckman Coulter instruments has been performed by persons not employed by Beckman Coulter, Inc. Furthermore, Beckman Coulter, Inc. assumes no liability whatsoever for any personal injury or property damage resulting from maintenance and/or repair of Beckman Coulter instruments performed by persons not employed by Beckman Coulter, Inc.

READ ALL PRODUCT MANUALS AND CONSULT WITH BECKMAN COULTER-TRAINED PERSONNEL BEFORE ATTEMPTING TO OPERATE INSTRUMENT.

HAZARDS AND OPERATIONAL PRECAUTIONS AND LIMITATIONS

WARNINGS, CAUTIONS, and IMPORTANTS alert you as follows:

WARNING - Might cause injury.
CAUTION - Might cause damage to the instrument.
IMPORTANT - Might cause misleading results.

Beckman Coulter, Inc. urges its customers to comply with all national health and safety standards such as the use of barrier protection. This may include, but it is not limited to, protective eyewear, gloves, and suitable laboratory attire when operating or maintaining this or any other automated laboratory analyzer.

"This Service Manual contains confidential information of Beckman Coulter, Inc. and its receipt or possession does not convey any rights to reproduce, disclose its contents, or to manufacture, use, or sell anything it may describe. Reproduction, disclosure, or use without specific written authorization of Beckman Coulter, Inc. is strictly forbidden."

Copyright © Beckman Coulter, Inc. 1999-2000
All rights reserved.

Initial Issue, 6/99
Released by CN 036730-0047
Software Version 1.0

Revision B, 8/00
Released by CN 036750-0145
Software Version 1.3

Revision B is being issued as change pages (PN 4277102). This revision deletes any references to the current Service Disk or the Service Disk 2, deletes check digits from all part numbers, updates all needle-drive cylinder illustrations to include the hazard label and the Hall effect needle-position sensors, adds a procedure for aligning the needle-position sensors, updates the parts lists, and incorporates information released by Service Memos 1621, 1821, and 1883.

Changes were made on the following pages 1.1-2, 1.1-4, 1.1-5, 1.2-3, 1.2-4, 1.2-5, 2.1-1, 2.1-2, 2.8-2, 2.9-2, 2.9-3, 2.9-4, 3.2-2, 3.2-5, 3.3-4 (deletion), 3.6-2, 3.6-3, 3.7-3, 3.10-1 through 3.10-3, 4.2-1, 4.2-3, 4.2-5, 4.2-9, 4.2-10 through 4.2-14, 4.3-1, 4.4-1, 4.4-2, 4.6-1, 4.6-2, 4.9-2, 4.9-3, 4.10-1, 4.11-1, 4.11-2 and 4.11-3, 4.12-1, 4.12-2, 4.13-1, 4.13-2, 4.14-1, 4.15-2, 4.16-1, 4.16-2, 4.16-8, 4.18-1, 4.19-1, 4.19-2, 4.20-1, 4.20-4, 4.21-1, 4.25-1, 4.26-1, 4.29-2 through 4-29.6, 4.30-1, 4.31-2, 4.33-1, 4.34-2, 4.35-1, 4.38-1, 4.38-2, 4.39-1, 4.40-1, 4.40-2, 4.41-2, 4.42-1, 4.43-1, 4.43-2, 4.43-5, 4.44-1 through 4.44-3, 7.1-6 and 7.1-7, 7.12, 7.1-23 (deletions), 7.3-1, 7.5-1, 8.1-1 through 8.1-26, 8.2-3, 8.2-5, 8.2-7, 8.2-9, 8.2-11, 8.2-12, 8.2-13, 8.2-15, 8.2-17, 8.2-19, 8.2-20, 8.2-21, 8.2-23, 8.2-25, 8.2-26, 8.2-27, 8.2-29, 8.2-30, 8.2-31, 8.2-33, 8.2-35, 8.2-37, 8.2-39, 8.2-41, 8.2-43, 8.2-45, A.5-1, A.5-3, A.5-5, A.5-6, A.6-1, A.6-2, A.6-3, and B.1-1 through B.1-9. Appendix C is deleted.

The change page packet also includes the latest revision of the Pneumatic/Hydraulic Layout, DCN 6320510.

Except for the removal of check digits from the part numbers, changes that are part of the most recent revision are indicated in the printed copy by a bar in the margin of the amended page.

This document applies to the latest software listed and higher versions. When a subsequent software version affects the information in this document, the changes will be included on minor revision change pages or summarized on a Notice of Information Update form and will be released by service memo.

REVISION STATUS

CONTENTS

LEGAL NOTICES

REVISION STATUS, iii

1 INTRODUCTION, 1.1-1

1.1 MANUAL DESCRIPTION, 1.1-1
Scope, 1.1-1
Intended Audience, 1.1-2
Organization, 1.1-3
Numbering Format, 1.1-4
Special Headings, 1.1-4
WARNING, 1.1-4
CAUTION, 1.1-4
IMPORTANT, 1.1-4
ATTENTION, 1.1-4
Note, 1.1-4
Conventions, 1.1-5

1.2 SAFETY PRECAUTIONS, 1.2-1
Laser, 1.2-1
Laser Beam Hazards, 1.2-1
Laser Radiation Hazards, 1.2-2
Electronic, 1.2-4
Biological, 1.2-4
Troubleshooting, 1.2-5

2 INSTRUMENT DESCRIPTION, 2.1-1

2.1 INTRODUCTION TO THE COULTER HmX ANALYZER, 2.1-1
Function, 2.1-1
Description, 2.1-1
Main Components, 2.1-1
Systems, 2.1-4
Physical Specifications, 2.1-4
Performance Specifications and Characteristics, 2.1-4
Leakage Current Specifications, 2.1-5
Operation, 2.1-5
Modes of Operation, 2.1-5
Operating Procedures, 2.1-6

2.2 ELECTRONIC SYSTEM - OVERVIEW AND POWER SUPPLIES, 2.2-1
Electronic System Overview, 2.2-1
Electronic Power Supply, 2.2-1
Components, 2.2-1
Function, 2.2-2
Color Coding, 2.2-3
Connectors, 2.2-4
Specifications, 2.2-4
Voltage Configurations, 2.2-4
Fuses, 2.2-4

Laser Power Supply, 2.2-4
Function, 2.2-4
RF Power Supply, 2.2-4
Components, 2.2-4
Function, 2.2-4
Voltage Monitoring, 2.2-4

2.3 ELECTRONIC SYSTEM - SIGNAL FLOW BLOCK DIAGRAMS, 2.3-1

2.4 ELECTRONIC SYSTEM - ANALYZER MODULE, 2.4-1
Function, 2.4-1
Description, 2.4-1
376 CPU Card, 2.4-2
Description, 2.4-2
Software Download Sequence, 2.4-2
Jumpers for the 376 CPU Card, 2.4-3
376 CPU Card Inputs/Outputs, 2.4-3
RAM Timer Card, 2.4-3
Jumpers for the RAM Timer Card, 2.4-3
DILUTER INTERFACE Card, 2.4-4
Function, 2.4-4
Lyse Trigger Test Point, 2.4-4
Jumper, 2.4-4
DILUTER INTERFACE Card Inputs/Outputs, 2.4-4
I/O Card, 2.4-6
Function, 2.4-6
Jumpers, 2.4-7
I/O Card Inputs/Outputs, 2.4-7
VCS PROCESSOR Card, 2.4-8
Function, 2.4-8
Noise Levels, 2.4-9
Jumper, 2.4-9
VCS PROCESSOR Card Inputs/Outputs, 2.4-9
R/W/P PROC Card, 2.4-9
Function, 2.4-9
RBC and WBC Counting Sequences, 2.4-10
RBC and WBC Voting Criteria, 2.4-10
WBC, RBC and Plt Histogram Development, 2.4-10
Data Transfer Method for Histogram Development, 2.4-10
Voting Criteria for Histogram-Derived Parameters, 2.4-13
Noise Levels, 2.4-13
Jumpers, 2.4-13
R/W/P PROC Card Inputs/Outputs, 2.4-13
R/W PREAMP Card, 2.4-14
Function, 2.4-14
R/W PREAMP Card Inputs/Outputs, 2.4-14

2.5 PNEUMATIC SYSTEM, 2.5-1
Pneumatic Power Supply, 2.5-1
Components, 2.5-1

Function, 2.5-1
Voltage Configurations, 2.5-2
Fuse, 2.5-2
Pressure and Vacuum Distribution, 2.5-2
60-psi Pressure Distribution, 2.5-2
30-psi Pressure Distribution, 2.5-3
Sheath Pressure Distribution, 2.5-3
Sample Pressure Distribution, 2.5-3
High Vacuum Distribution, 2.5-3
Low Vacuum Distribution, 2.5-3
Pneumatic Monitor Card, 2.5-3

2.6 REAGENT SYSTEM, 2.6-1
Reagent Input and Distribution, 2.6-1
Reagent Monitoring, 2.6-1
Fluid Detector/Ram Pressure Card, 2.6-1
Function, 2.6-1
Connectors, 2.6-2
Reagent Temperature Control, 2.6-2
Peltier Module Description, 2.6-2
Peltier Module Function, 2.6-3
Temperature Range Cycles, 2.6-4
Waste Removal and Monitoring, 2.6-5

2.7 SAMPLE HANDLER SYSTEM - SAMPLE HANDLER CARD, 2.7-1
Function, 2.7-1
LEDs, 2.7-1
Responses During Power Up, 2.7-1
Responses During Download, 2.7-3
Responses to the Carousel Position in the Rotary Cap-Pierce Module, 2.7-4
Response to a Power Fluctuation, 2.7-4
Ensuring the Instrument and the Sample Handler Configurations Match, 2.7-4
Avoiding Instrument Damage During a Download, 2.7-4
Jumpers, 2.7-5
Sample Handler Card Inputs/Outputs, 2.7-5

2.8 SAMPLE HANDLER SYSTEM - ROTARY CAP-PIERCE MODULE, 2.8-1
Function, 2.8-1
Description, 2.8-1
Summary of Operation, 2.8-3
RCP Junction Card, 2.8-4
Function, 2.8-4
RCP Junction Card Inputs/Outputs, 2.8-4

2.9 SAMPLE HANDLER SYSTEM - AUTOLOADER MODULE, 2.9-1
Function, 2.9-1
Description, 2.9-1
Summary of Operation, 2.9-5

Autoloader Interface Card, 2.9-7
Function, 2.9-7
Autoloader Interface Card Inputs/Outputs, 2.9-8
Rocker Bed Interface Card, 2.9-8
Function, 2.9-8
Rocker Bed Interface Card Inputs/Outputs, 2.9-9

2.10 SAMPLE HANDLER SYSTEM - AUTOSENSOR TEST CARD, 2.10-1

2.11 SAMPLE PROCESSING SYSTEM - DILUTER, 2.11-1
Function, 2.11-1
Description, 2.11-1
Main Components, 2.11-1
Solenoid Valves, 2.11-1
Blood Sampling Valve (BSV), 2.11-2
Blood/Bubble Detectors, 2.11-3
Sample Processing, 2.11-4
Primary-Mode Aspiration, 2.11-4
WBC/RBC Sample Delivery, 2.11-5
Diff Segmentation, 2.11-6
Diff Segment and Erythrolyse II Reagent Delivery, 2.11-6
Cross Rinse to the Baths, 2.11-7
Secondary-Mode Aspiration, 2.11-7
Pre-Prep/Latex Aspiration, 2.11-8
RBC Sample Delivery, Secondary Mode, 2.11-9
Backwash Functions, 2.11-10

2.12 SAMPLE ANALYSIS SYSTEM - CBC TECHNOLOGY, 2.12-1
Summary, 2.12-1
Applying the Coulter Principle, 2.12-1
Sensing Area, 2.12-1
Aperture Current, 2.12-1
Aperture Vacuum, 2.12-2
Analyzing the RBC, WBC, and Plt Data, 2.12-2
Determining the Hgb, 2.12-2

2.13 SAMPLE ANALYSIS SYSTEM - VCS TECHNOLOGY, 2.13-1
Summary, 2.13-1
VCS Measurements, 2.13-1
V - Volume (DC), 2.13-1
C - Conductivity (RF), 2.13-1
S - Light Scatter (LS), 2.13-1
Opacity (OP), 2.13-2
Rotated Light Scatter (RLS), 2.13-2
Linear Light Scatter (LLS), 2.13-2
Applying the VCS Technology, 2.13-2
Sensing Area, 2.13-2
DC and RF Currents, 2.13-2
Laser Light Source, 2.13-2
Flow-Cell Hydraulics, 2.13-3

Analyzing the Data, 2.13-5
Preprocessing, 2.13-5
RF Detector Preamp Card, 2.13-5
Function, 2.13-5
RF Detector Preamp Card Inputs/Outputs, 2.13-6
LS Preamp 5 Module, 2.13-6
Primary Function, 2.13-6
Mode Select, 2.13-7
LS Offset Voltage, 2.13-7
LS Preamp 5 Module Inputs/Outputs, 2.13-8

3 INSTALLATION PROCEDURES, 3.1-1

PART A: INSTRUMENT INSTALLATION

3.1 PREINSTALLATION CHECK, 3.1-1
Customer Training, 3.1-1
Carton Arrival, 3.1-1
Space and Accessibility, 3.1-1
Electrical Input, 3.1-1
Ambient Temperature and Humidity, 3.1-2
Ventilation, 3.1-2
Drainage, 3.1-3
Supplies, 3.1-3

3.2 INITIAL SETUP, 3.2-1

3.3 CONNECTING ASSEMBLIES, 3.3-1
Electronic Cable Connections, 3.3-1
Tubing Connections, 3.3-3

3.4 TESTING/CONFIGURING ASSEMBLIES, 3.4-1
Electronic Power Supply, 3.4-1
Data Management System (DMS), 3.4-1
Software Installation, 3.4-1
Bar-Code Reader Decoder Card Configuration, 3.4-1
Setting Up the Optional Printers, 3.4-1

3.5 INITIAL SYSTEM SETUP, 3.5-1
Setting Up the Institution Information, 3.5-1
Reagent System Setup, 3.5-1
Priming Reagents, 3.5-1
Adjusting the Hemoglobin Blank (Hgb Blank), 3.5-1
Adjusting the Blood/Bubble Detector Gains, 3.5-2

3.6 SYSTEM TESTING, 3.6-1
Tools/Supplies Needed, 3.6-1
Performing System Test and Start Up, 3.6-1
Verifying General Operation of the Primary Mode on Instruments with a Rotary Cap-Pierce Module, 3.6-2
Verifying General Operation of the Primary Mode on Instruments with an

Autoloader Module, 3.6-3
Verifying General Operation of the Secondary Mode, 3.6-5

3.7 ADJUSTMENTS AND CALIBRATION, 3.7-1
Entering Calibration Factors, 3.7-1
Measuring the RMS Noise, 3.7-1
Verifying the Diluent and Lytic Reagent Dispense Timing, 3.7-1
Verifying the CBC Latex Calibration, 3.7-1
Adjusting the Clog Detector Circuit, 3.7-1
Measuring the LS Offset Voltage, 3.7-1
Verifying the DC Count and VCS Flow Rate, 3.7-2
Verifying the Diff and Retic Latex Calibration, 3.7-2
Checking Reproducibility and Carryover in the Primary Mode, 3.7-2
Checking Reproducibility and Carryover in the Secondary Mode, 3.7-2
Checking Reproducibility and Carryover for the Retic Parameter, 3.7-3
Making Initial Primary-Mode Calibration Adjustments, 3.7-3
Verifying the Secondary Mode - to - Primary Mode Calibration, 3.7-3
Calibrating the Primary Mode with S-CAL® Calibrator, 3.7-4
Setting Up the Control Files and Running the Controls, 3.7-4
Completing the Installation Paperwork, 3.7-4

3.8 ACCOUNT/INSTRUMENT INFORMATION, 3.8-1
Purpose, 3.8-1
Account Information, 3.8-1
Installation Test Data Checklist, 3.8-1
(✓ = confirmed complete), 3.8-1
Installation Test Data Log Sheets, 3.8-2
A. System Test Data, 3.8-2
B. Startup Results, 3.8-3
C. RMS Noise Check Measurements (CBC), 3.8-4
D. RMS Noise Check Measurements (Diff and Retic), 3.8-4
E. CBC-Mode Latex Calibration, 3.8-5
F. Clog Detector Setup Results, 3.8-6
G. LS Offset Measurements, 3.8-6
H. Five Patient Scatterplots Displaying DC Counts and Times, 3.8-7
I. Diff-Mode Latex Calibration (Five Consecutive Runs), 3.8-8
J. Retic-Mode Latex Calibration (Five Consecutive Runs), 3.8-9
K. Primary-Mode Reproducibility Run, 3.8-10
L. Primary-Mode Carryover Run, 3.8-11
M. Secondary-Mode Reproducibility Run, 3.8-12
N. Secondary-Mode Carryover Run, 3.8-13
O. Retic Mode-to-Mode Carryover Run, 3.8-14
P. Retic Within-Mode Carryover Run, 3.8-15
Q. Primary-Mode Initial Adjustment to 5C Normal Cell Control Cal Factors, 3.8-16
R. Mode-to-Mode Calibration and Verification Runs/Secondary Mode Calibration Factors, 3.8-17
S. S-CAL Calibrator Calibration Batch Tables/Cal Factors, 3.8-18
T. Control Results, 3.8-19

PART B: UPGRADES AND OPTIONS INSTALLATION

3.9 Setting Up the Optional Printers, 3.9-1
Graphic Printer Installation, 3.9-1

3.10 CONFIGURING THE HmX ANALYZER FOR CYANIDE-FREE REAGENTS, 3.10-1
Purpose, 3.10-1
Tools/Supplies Needed, 3.10-1
Reagent Changes, 3.10-1
Pre-Conversion Instrument Verification, 3.10-1
Reagent Conversion, 3.10-2
Post-Conversion Instrument Verification, 3.10-2

4 SERVICE AND REPAIR PROCEDURES, 4.1-1

4.1 GUIDELINES FOR SERVICING THE HmX ANALYZER, 4.1-1
General, 4.1-1
Power Down/Power Up the System, 4.1-2
Purpose, 4.1-2
Power Down, 4.1-2
Power Up, 4.1-2
Reset the System, 4.1-2
Clear the CPU RAM, 4.1-3
Purpose, 4.1-3
Procedure, 4.1-3

4.2 USING THE SERVICE DISK, 4.2-1
Purpose, 4.2-1
Tools/Supplies Needed, 4.2-1
Activating the DMS Service Options, 4.2-1
Deactivating the DMS Service Options, 4.2-2
Using the Service Disk Software on a DMS, 4.2-3
Using the Service Disk Software on a Hard Drive, 4.2-5
Installing the Software, 4.2-5
Running the Software, 4.2-5

4.3 WHOLE BLOOD VERIFICATION - CBC/DIFF, 4.3-1
Purpose, 4.3-1
Tools/Supplies Needed, 4.3-1
Procedure, 4.3-1

4.4 LATEX CALIBRATION AND VERIFICATION, 4.4-1
Purpose, 4.4-1
CBC Latex Calibration and Verification, 4.4-1
Tools/Supplies Needed, 4.4-1
Procedure, 4.4-1
Diff and Retic Latex Calibration and Verification, 4.4-2
Tools/Supplies Needed, 4.4-2
Procedure, 4.4-2

4.5 REPRODUCIBILITY CHECKS, 4.5-1
Purpose, 4.5-1
Verifying Reproducibility in the Primary Mode, 4.5-1
Tools/Supplies Needed, 4.5-1
Procedure, 4.5-1
Verifying Reproducibility in the Secondary Mode, 4.5-2
Tools/Supplies Needed, 4.5-2
Procedure, 4.5-2
Verifying Retic % Reproducibility (Sample Analysis), 4.5-3
Tools/Supplies Needed, 4.5-3
Procedure, 4.5-3

4.6 CARRYOVER CHECKS, 4.6-1
Purpose, 4.6-1
Checking Carryover in the Primary Mode, 4.6-1
Tools/Supplies Needed, 4.6-1
Procedure, 4.6-1
Checking Carryover in the Secondary Mode, 4.6-2
Tools/Supplies Needed, 4.6-2
Procedure, 4.6-2
Retic Carryover Tests, 4.6-2
Tools/Supplies Needed, 4.6-2
General Instructions, 4.6-3
Retic Mode-to-Mode Carryover, 4.6-3
Retic Within Mode, 4.6-3

4.7 INITIAL ADJUSTMENT OF PRIMARY-MODE CALIBRATION FACTORS, 4.7-1
Purpose, 4.7-1
Tools/Supplies Needed, 4.7-1
Procedures, 4.7-1

4.8 SECONDARY MODE-TO-PRIMARY MODE CALIBRATION, 4.8-1
Purpose, 4.8-1
Tools/Supplies Needed, 4.8-1
Procedure, 4.8-1

4.9 VCS OPTIMIZATION, 4.9-1
Purpose, 4.9-1
Tools/Supplies Needed, 4.9-2
A. Preliminary Checks, 4.9-3
B. Count Ratio Check, 4.9-3
C. VCS Flow-Rate Adjustment, 4.9-4
D. Clog Detector Circuit Adjustment, 4.9-4
E. RF Detector Preamp Card C1 Adjustments, 4.9-4
F. DC, RF, and LS Gains Adjustments, 4.9-4
G. DC, RF and LS Noise Measurements, 4.9-4
H. Erythrolyse II and StabiLyse Reagent Pumps Volume Adjustments, 4.9-4
I. Verification, 4.9-4

4.10 VCS FLOW-RATE ADJUSTMENT, 4.10-1
Purpose, 4.10-1

Tools/Supplies Needed, 4.10-1
Sheath Pressure Adjustment, 4.10-1
Sample Pressure Adjustment, 4.10-1
Verification, 4.10-3

4.11 RF DETECTOR PREAMP CARD ADJUSTMENTS, 4.11-1
Purpose, 4.11-1
Clog Detector Circuit Adjustment, 4.11-1
Tools/Supplies Needed, 4.11-1
Procedure, 4.11-1
Verification, 4.11-2
C1 Adjustment, 4.11-2
Tools/Supplies Needed, 4.11-2
Procedure, 4.11-2
Verification, 4.11-3

4.12 RMS NOISE CHECKS, 4.12-1
Purpose, 4.12-1
CBC RMS Noise Checks, 4.12-1
Tools/Supplies Needed, 4.12-1
Procedure, 4.12-1
Diff and Retic RMS Noise Checks, 4.12-1
Tools/Supplies Needed, 4.12-1
Procedure, 4.12-1

4.13 FLOW-CELL CLEANING, 4.13-1
Purpose, 4.13-1
Tools/Supplies Needed, 4.13-1
Procedure, 4.13-1
Verification, 4.13-3

4.14 LENS BLOCK CLEANING, 4.14-1
Purpose, 4.14-1
Tools/Supplies Needed, 4.14-1
Procedure, 4.14-1

4.15 LASER/FLOW CELL ALIGNMENT, 4.15-1
Purpose, 4.15-1
Tools/Supplies Needed, 4.15-2
Flow-Cell Cleaning, 4.15-2
Flow-Cell Z-Axis (Focus) Alignment, 4.15-2
Flow-Cell X- and Y-Axis Plate Alignment, 4.15-4
Flow-Cell Y-Axis Final Alignment, 4.15-6
Verification, 4.15-7

4.16 ERYTHROLYSE™ II AND STABILYSE™ REAGENT PUMPS ADJUSTMENT AND REPLACEMENT, 4.16-1
Erythrolyse II and StabiLyse Reagent Pumps Adjustment, 4.16-1
Purpose, 4.16-1
Tools/Supplies Needed, 4.16-2
Adjusting the Erythrolyse II Reagent Pumps Volume, 4.16-4

Adjusting the StabiLyse Reagent Pump Volume, 4.16-5
Optimizing the Erythrolyse II Reagent Pumps Volume, 4.16-7
Verifying Erythrolyse II and StabiLyse Reagent Pumps Volume Adjustment, 4.16-8
Erythrolyse II Reagent Pumps Replacement, 4.16-8
Erythrolyse II Reagent Pumps Removal, 4.16-8
Erythrolyse II Reagent Pump Installation, 4.16-8

4.17 ASPIRATION PUMP VOLUME ADJUSTMENT, 4.17-1
Tools/Supplies Needed, 4.17-1
Procedure, 4.17-1
Verification, 4.17-2

4.18 CBC LYTIC REAGENT PUMPS VERIFICATION, 4.18-1
Tools/Supplies Needed, 4.18-1
Procedure, 4.18-1
Verification, 4.18-1

4.19 RBC/WBC DILUENT DISPENSERS VOLUME TESTING, 4.19-1
Purpose, 4.19-1
Measuring Diluent by Volume, 4.19-1
Tools/Supplies Needed, 4.19-1
Procedure, 4.19-1
Measuring Diluent by Weight, 4.19-2
Tools/Supplies Needed, 4.19-2
Procedure, 4.19-2
Verification, 4.19-3

4.20 LYTIC REAGENT AND DILUENT DELIVERY TIMING CHECK, 4.20-1
Tools/Supplies Needed, 4.20-1
Purpose, 4.20-1
Procedure, 4.20-1
Verification, 4.20-4

4.21 BLOOD/BUBBLE DETECTORS GAIN ADJUSTMENT, 4.21-1
Tools/Supplies Needed, 4.21-1
Procedure, 4.21-1
Verification, 4.21-2

4.22 ELECTRONIC POWER SUPPLY REPLACEMENT, 4.22-1
Removal, 4.22-1
Installation, 4.22-1

4.23 VOLTAGE CHECKS AND ADJUSTMENTS, 4.23-1
System Voltage Checks, 4.23-1
Using the DMS to Check System Voltages, 4.23-1
Using an External DMM to Check and Adjust System Voltages, 4.23-1
LS Offset Voltage Check, 4.23-3
Tools/Supplies Needed, 4.23-3
Procedure, 4.23-3
System Voltage Checks Verification, 4.23-4

4.24 PNEUMATIC POWER SUPPLY REPLACEMENT, 4.24-1
Removal, 4.24-1
Setup of Pneumatic Power Supply Buck-Boost Transformer, 4.24-1
Installation, 4.24-2

4.25 PRESSURE/VACUUM ADJUSTMENT, 4.25-1
General, 4.25-1
System Test (Pressure/Vacuum Verification), 4.25-1
Pressure Adjustments, 4.25-1
Tools/Supplies Needed, 4.25-1
60-psi Pressure Adjustment, 4.25-1
30-psi Pressure Adjustment, 4.25-3
Sheath Pressure Adjustment, 4.25-3
Initial Sample Pressure Adjustment, 4.25-4
Vacuum Adjustments, 4.25-4
High Vacuum Verification, 4.25-4
Low Vacuum Adjustment, 4.25-5

4.26 SOLENOID VALVES INSPECTION AND REPLACEMENT, 4.26-1
Tools/Supplies Needed, 4.26-1
Solenoid Inspection, 4.26-1
Solenoid Replacement, 4.26-6
Removal, 4.26-6
Installation, 4.26-6
Verification, 4.26-7

4.27 HEMOGLOBIN PREAMP MODULE REPLACEMENT, 4.27-1
Purpose, 4.27-1
Removal, 4.27-1
Installation, 4.27-2
Hemoglobin Lamp Adjustment, 4.27-2
Verification, 4.27-2

4.28 APERTURE MODULE AND BATH ASSEMBLY, 4.28-1
Removal, 4.28-1
Installation, 4.28-2
Verification, 4.28-2

4.29 BSV AND BSV ACTUATOR DISASSEMBLY/REPLACEMENT, 4.29-1
Purpose, 4.29-1
BSV Disassembly/Replacement, 4.29-1
Purpose, 4.29-1
Tools/Supplies Needed, 4.29-1
BSV Removal, 4.29-1
BSV Installation, 4.29-2
BSV Disassembly/Replacement Verification, 4.29-3
BSV Actuator Replacement, 4.29-4
Purpose, 4.29-4
Tools/Supplies Needed, 4.29-4
BSV Actuator Removal, 4.29-4
BSV Actuator Installation, 4.29-6

4.30 CAROUSEL MOTOR REPLACEMENT, 4.30-1
Removal, 4.30-1
Installation, 4.30-1
Verification, 4.30-2

4.31 CODE WHEEL ALIGNMENT, 4.31-1
Tools/Supplies Needed, 4.31-1
Procedure, 4.31-1
Verification, 4.31-3

4.32 NEEDLE REPLACEMENT, 4.32-1
Needle Replacement - HmX Analyzer with Autoloader Module, 4.32-1
Purpose, 4.32-1
Tools/Supplies Needed, 4.32-1
Procedure, 4.32-1
Needle Replacement - HmX Analyzer with Rotary Cap-Pierce Module, 4.32-5
Purpose, 4.32-5
Tools/Supplies Needed, 4.32-5
Procedure, 4.32-5
Verification, 4.32-9

4.33 RINSE BLOCK ADJUSTMENT, 4.33-1
Tools/Supplies Needed, 4.33-1
Procedure, 4.33-1
Verification, 4.33-2

4.34 AUTOLOADER MODULE REMOVAL, 4.34-1
Purpose, 4.34-1
Tools/Supplies Needed, 4.34-1
Removal, 4.34-1
Installation, 4.34-1
Verification, 4.34-2

4.35 ROCKER BED ASSEMBLY REMOVAL, 4.35-1
Purpose, 4.35-1
Tools/Supplies Needed, 4.35-1
Removal, 4.35-1
Installation, 4.35-3
Verification, 4.35-3

4.36 ELEVATOR PLATFORM STEPPER MOTOR REPLACEMENT, 4.36-1
Purpose, 4.36-1
Tools/Supplies Needed, 4.36-1
Removal, 4.36-1
Installation, 4.36-1
Verification, 4.36-1

4.37 TUBE AVAILABLE SENSOR ASSEMBLY REPLACEMENT, 4.37-1
Purpose, 4.37-1
Tools/Supplies Needed, 4.37-1
Removal, 4.37-1

Installation, 4.37-1
Verification, 4.37-1

4.38 BAR-CODE READER DECODER CARD CONFIGURATION, 4.38-1
Purpose, 4.38-1
Tools/Supplies Needed, 4.38-1
Procedure, 4.38-1
Connecting the Bar-Code Communications Cable, 4.38-1
Selecting the Settings for the Microscan™ Bar-Code Reader Decoder Card, 4.38-2
Reassembling the Instrument for Operation, 4.38-4
Verification, 4.38-4

4.39 BAR-CODE SCANNER ALIGNMENT (FOR AUTOLOADER MODULE ONLY), 4.39-1
Purpose, 4.39-1
Tools/Supplies Needed, 4.39-1
Procedure, 4.39-1
Connecting the Bar-Code Communications Cable, 4.39-1
Aligning the Bar-Code Scanner, 4.39-2
Reassembling the Instrument for Operation, 4.39-3
Verification, 4.39-4

4.40 ROCKER BED LINKAGE ADJUSTMENT, 4.40-1
General, 4.40-1
Tools/Supplies Needed, 4.40-2
Procedure, 4.40-2
Verification, 4.40-4

4.41 SPECIMEN TUBE STOPPER PIERCE-PROXIMITY ADJUSTMENT, 4.41-1
General, 4.41-1
Purpose, 4.41-1
Tools/Supplies Needed, 4.41-2
Preliminary Procedure, 4.41-2
Horizontal Pierce-Proximity Adjustments, 4.41-2
Vertical Pierce-Proximity Adjustments, 4.41-2
Verification, 4.41-3

4.42 CASSETTE INDEX MOTOR/INDEX HUB GAP ADJUSTMENT, 4.42-1
Purpose, 4.42-1
Tools/Supplies Needed, 4.42-1
Procedure, 4.42-1
Verification, 4.42-1

4.43 SWITCH/SENSOR CHECK, 4.43-1
Tools/Supplies Needed, 4.43-1
Purpose, 4.43-1
Procedure, 4.43-1

4.44 NEEDLE-POSITION SENSORS ADJUSTMENT, 4.44-1
Purpose, 4.44-1

Procedure, 4.44-1
Verification, 4.44-3

5 MAINTENANCE PROCEDURES, 5.1-1

5.1 MAINTENANCE AND SYSTEM VERIFICATION RECOMMENDATIONS, 5.1-1
Required Service Forms, 5.1-1
Maintenance Schedule, 5.1-1
Verifying Instrument Performance, 5.1-1
Purpose, 5.1-1
Tools/Supplies Needed, 5.1-1
Procedure, 5.1-1
Recording Reference Voltages, 5.1-1

6 SCHEMATICS, 6.1-1

6.1 ENGINEERING SCHEMATICS, 6.1-1
Schematics Included, 6.1-1
Schematics Not Included but Available, 6.1-1

7 TROUBLESHOOTING, 7.1-1

7.1 ERROR MESSAGES, 7.1-1

7.2 FLOW-CELL ERRORS FC, PC1, AND PC2, 7.2-1

7.3 DC, RF, OR LS NOISE PROBLEMS, 7.3-1
Purpose, 7.3-1
Tools/Supplies Needed, 7.3-1
DC Noise Troubleshooting Checks, 7.3-1
RF Noise Troubleshooting Checks, 7.3-2
LS Noise Troubleshooting Checks, 7.3-7

7.4 DC, RF, OR LS LATEX CALIBRATION PROBLEMS, 7.4-1

7.5 REPORTED INSTRUMENT PROBLEMS AND SOLUTIONS, 7.5-1

8 PARTS LISTS, 8.1-1

8.1 MASTER PARTS LIST, 8.1-1

8.2 ILLUSTRATED PARTS, 8.2-1

A QUICK REFERENCE INFORMATION, A.1-1

A.1 TOLERANCES AND LIMITS, A.1-1
Calibration Tolerances, A.1-1
Electronic Noise Limits, A.1-2
Performance Specifications, A.1-2
Background Counts, A.1-2
Carryover Limits, A.1-2
Reproducibility/Precision Limits, A.1-3
Secondary Mode- to- Primary Mode Comparison, A.1-4

Pneumatic Tolerances, A.1-5
Power Input Specifications and Typical Consumption, A.1-5
Input Power, A.1-5
Input Line Interference, A.1-5
Power Consumption, A.1-6
Timing, A.1-7
VCS Optimization Limits, A.1-8
Voltages, A.1-9
Sample Handler Cards, A.1-9
System, A.1-9
Volumes, A.1-10
Aspiration Pump, Primary Mode, A.1-10
Diluent Dispensers, A.1-10
CBC Lytic Reagent Pumps' Volume Tolerance, A.1-10

A.2 CIRCUIT CARDS - JUMPERS AND TEST POINTS, A.2-1
376 CPU Card, A.2-1
Jumper Settings, A.2-1
Autoloader Interface Card, A.2-2
Connectors, A.2-2
DILUTER INTERFACE Card, A.2-3
Jumper Setting, A.2-3
Test Point, A.2-3
Fluid Detector/Ram Pressure Card, A.2-4
Connectors, A.2-4
LEDs, A.2-4
I/O Card, A.2-5
Jumper Settings, A.2-5
Peltier Controller Card, A.2-6
Connectors and LEDs, A.2-6
Pneumatic Monitor Card, A.2-7
Connector, A.2-7
Test Points, A.2-8
RAM Timer Card, A.2-9
Jumper Settings, A.2-9
Rocker Bed Interface Card, A.2-10
Connectors, A.2-10
R/W/P PROC Card, A.2-11
Jumper Settings, A.2-11
Test Points, A.2-11
Sample Handler Card, A.2-12
Blood/Bubble Detector Adjustments and Test Points, A.2-12
Connectors, A.2-12
Jumper Settings, A.2-12
LEDs, A.2-13
VCS PROCESSOR Card, A.2-14
Jumper Setting, A.2-14
Test Points, A.2-14

A.3 POWER SUPPLIES - SWITCH SETTINGS; FUSE RATINGS; AND CONNECTIONS, JUMPERS, AND TEST POINTS, A.3-1
Power Switch Settings, A.3-1
Fuse Ratings and Functions, A.3-1
Electronic Power Supply, A.3-2
Jumpers and Connections, A.3-2
Test Points and Adjustments, A.3-2
Laser Power Supply, A.3-4
Jumpers and Connections, A.3-4
Pneumatic Power Supply, A.3-4
Jumpers and Connections, A.3-4

A.4 SOFTWARE SETTINGS, A.4-1
Bar-Code Reader Decoder Card, A.4-1

A.5 DILUTER COMPONENT LOCATIONS AND FUNCTIONS, A.5-1

A.6 SOFTWARE MENU TREES, A.6-1

B DMS DATABASE FIELDS, B.1-1

B.1 FIELDS CONTAINED IN THE HmX ANALYZER DATABASE, B.1-1
About the List, B.1-1
HmX Analyzer 1.3 Database Fields, B.1-1

ABBREVIATIONS, ABBREVIATIONS-1

INDEX, INDEX-1

TRADEMARKS

ILLUSTRATIONS

1.2-1 Triple Transducer Module Laser Warning and Certification Labels, 1.2-2
1.2-2 Bar-Code Reader Laser Warning Labels on the Rotary Cap-Pierce Module, 1.2-3
1.2-3 Bar-Code Reader Laser Warning Labels on the Autoloader Module, 1.2-3
2.1-1 Main Unit with Rotary Cap-Pierce Module, Front View, Main Component Locations, 2.1-2
2.1-2 Main Unit with Autoloader Module, Front View, Main Component Locations, 2.1-2
2.1-3 Main Unit Rear View, Main Component Locations, 2.1-3
2.1-4 Main Unit Right-Side View, Main Component Locations, 2.1-3
2.1-5 Main Unit Left-Side View, Main Component Locations, 2.1-4
2.2-1 Electronic Power Supply, Front View, 2.2-2
2.2-2 Electronic Power Supply Components, Top View, Cover Removed, 2.2-3
2.3-1 Signal Flow Block Diagram (HmX Analyzer with Rotary Cap-Pierce Module), 2.3-1
2.3-2 Signal Flow Block Diagram (HmX Analyzer with Autoloader Module), 2.3-2
2.4-1 Circuit Card Locations in the Card Cage, 2.4-1
2.4-2 Initial DMS to Instrument Download, 2.4-2
2.4-3 Subsequent DMS to Instrument Download, 2.4-3
2.4-4 DIILUTER INTERFACE Card and Solenoid Junction Card Block Diagram, 2.4-5
2.4-5 I/O Card Block Diagram, 2.4-6
2.4-6 VCS PROCESSOR Card Block Diagram, 2.4-8
2.4-7 R/W/P PROC Card and R/W PREAMP Card Block Diagram, 2.4-11
2.5-1 Pneumatic Power Supply Components, Left-Side View, Compressor Sub-Panel Removed, 2.5-1
2.5-2 Pressure and Vacuum Air Tank Locations, 2.5-2
2.5-3 Pneumatic Monitor Card Block Diagram, 2.5-4
2.5-4 Monitoring Sequence During Compressor Bleed, 2.5-5
2.6-1 Peltier Controller Card, 2.6-3
2.7-1 Sample Handler Card with Autoloader Module Block Diagram, 2.7-2
2.7-2 Sample Handler Card with Rotary Cap-Pierce Module Block Diagram, 2.7-3
2.8-1 Rotary Cap-Pierce Module Components, 2.8-2
2.9-1 Autoloader Module Components, Front View, Rocker Bed Forward, 2.9-3
2.9-2 Autoloader Module, Front View, Rocker Bed Backward, 2.9-4
2.9-3 Autoloader Module Components, Rear View, 2.9-4
2.10-1 Autosensor Test Card - LEDs Lit Following Power Up, 2.10-1
2.11-1 Solenoid and Tubing Label, 2.11-2
2.11-2 BSV Ports and Wire Markers, 2.11-3
2.11-3 BSV Flow Paths and Wire Markers, 2.11-3
2.11-4 Primary-Mode Aspiration, 2.11-5
2.11-5 WBC/RBC Sample Delivery, 2.11-5
2.11-6 Diff Segmentation, 2.11-6
2.11-7 Diff Segment and Erythrolyse II Reagent Delivery to Mixing Chamber, 2.11-6
2.11-8 Cross Rinse to the Baths, 2.11-7
2.11-9 Secondary-Mode Aspiration, 2.11-8
2.11-10 Pre-Prep Latex Aspiration, 2.11-9
2.11-11 Sample Delivery, Secondary-Mode, 2.11-9
2.11-12 Backwash Functions, 2.11-10
2.12-1 Applying the Coulter Principle, 2.12-1

2.13-1 Applying the VCS Technology, 2.13-3
2.13-2 Light Scatter Path, 2.13-3
2.13-3 Hydrodynamically Focused Cells, 2.13-4
2.13-4 Flow Cell Hydraulics, 2.13-4
2.13-5 RF Detector Preamp Card Signal Flow, 2.13-6
2.13-6 LS Preamp 5 Module Block Diagram, 2.13-7
2.13-7 LS Sensor Regions, 2.13-7
3.2-1 HmX Analyzer with Autoloader Module Main Component Layout, 3.2-1
3.2-2 TTM Baseplate Shipping Screws, 3.2-2
3.2-3 Compressor Shipping Pins, 3.2-3
3.2-4 Rocker Bed Lock-Down Screw, 3.2-5
3.3-1 Electronic Cable Connections, 3.3-1
3.3-2 DMS Line Voltage Select Switch, 3.3-2
3.3-3 Reagent and Drain Connections, 3.3-3
4.1-1 Switches for Clearing the CPU RAM, 4.1-3
4.2-1 Control and Sample Files Available for Viewing, 4.2-4
4.2-2 Single-Parameter Graph, 4.2-5
4.2-3 Parameter vs. Parameter Graph, 4.2-6
4.2-4 Multiple-Parameter Graph, 4.2-6
4.2-5 Flag Graph, 4.2-6
4.2-6 Statistics Window, 4.2-7
4.2-7 Sequential (Points) Mode, 4.2-7
4.2-8 Zoom Mode, 4.2-7
4.2-9 Histogram Mode, 4.2-8
4.2-10 Date-Offset Mode, 4.2-8
4.2-11 Control-File Graph, 4.2-8
4.2-12 Service Disk Utilities Menu Tree, 4.2-9
4.9-1 Optimization Procedure Flow, 4.9-1
4.9-2 Histogram of Good Count Ratio Data, 4.9-3
4.9-3 Histogram of Poor Count Ratio Data, 4.9-3
4.10-1 Unacceptable Flow-Rate Graph, 4.10-2
4.13-1 Wetting Applicator with Alcohol, 4.13-2
4.13-2 Wiping Front of Flow Cell, 4.13-2
4.13-3 Wiping Rear of Flow Cell, 4.13-2
4.15-1 Laser/Flow-Cell Alignment Work Flow, 4.15-1
4.15-2 Flow-Cell Z-Axis Alignment, 4.15-3
4.15-3 Scatter Sensor Laser Diffraction, 4.15-4
4.15-4 Flow-Cell X- and Y-Axis Plate Alignment, 4.15-5
4.15-5 Laser Reflected Light Beam with Special Light Shield Installed, 4.15-6
4.15-6 Laser Diffraction Pattern on Paper, 4.15-7
4.16-1 Match Sheath Fluid to Sample Stream Conductivity, 4.16-1
4.16-2 Effect of Dilution Conductivity on Count Ratio, 4.16-2
4.16-3 Effect of Osmolality on NE DC mean, 4.16-2
4.16-4 Erythrolyse II Reagent and StabiLyse Reagent Pump Optimization Flow Diagram, 4.16-3
4.16-5 Tubing from Mixing Chamber, 4.16-4
4.16-6 Volumetric Cylinder Calibration Marks, 4.16-4
4.16-7 Reading the Meniscus, 4.16-5

4.16-8 Diaphragm Pump Adjustment, 4.16-5
4.16-9 Pump Module Mounting Bracket, 4.16-8
4.17-1 Second Pull (Vacuum), 4.17-1
4.17-2 First Pull (Aspiration Pump)), 4.17-2
4.19-1 Reading a Meniscus, 4.19-2
4.20-1 WBC Bath Tubing Disconnect for Lytic Reagent/Diluent Delivery Timing Hookup, 4.20-2
4.20-2 Test Box and Transducer Hookup for Lytic Reagent/Diluent Timing Procedure, 4.20-2
4.20-3 Digital Pressure Meter Hookup for Lytic Reagent/Diluent Timing Procedure, 4.20-3
4.21-1 Blood/Bubble Detector Test Points and Adjustments, 4.21-1
4.22-1 Electronic Power Supply Connectors, 4.22-1
4.23-1 Electronic Power Supply, Front View, 4.23-2
4.23-2 Electronic Power Supply, Top View with Cover Removed, 4.23-2
4.24-1 Pneumatic Supply Removal, 4.24-1
4.25-1 60-psii Pressure Regulator, 4.25-2
4.27-1 Hgb Preamp Module, 4.27-1
4.28-1 Aperture Module and Bath Assembly, 4.28-1
4.29-1 Retaining the Probe-Slide Mechanism, 4.29-1
4.29-2 Removing the Rinse Block Screw and Washer, 4.29-2
4.29-3 Replacing the Rinse Block, 4.29-3
4.29-4 BSV Actuator (Configuration A) Allen Screw and Cylinder Seals, 4.29-4
4.29-5 BSV Actuator Removal, Configuration A, 4.29-5
4.29-6 BSV Actuator Removal, Configuration B, 4.29-5
4.30-1 Carousel Motor and Carousel Assembly, 4.30-1
4.31-1 Code Wheel, 4.31-2
4.32-1 Cleaning Solution, 4.32-1
4.32-2 Cassette into Loading Bay, 4.32-1
4.32-3 Safety Clip Installation, 4.32-2
4.32-4 Needle Cartridge Removal, 4.32-2
4.32-5 Needle Assembly Location Grooves, 4.32-3
4.32-6 Needle Assembly Tubing, 4.32-3
4.32-7 Needle Tubing Quick Disconnects, 4.32-4
4.32-8 Needle Assembly Installation, 4.32-4
4.32-9 Safety Clip Removal, 4.32-4
4.32-10 Cleaning Solution, 4.32-5
4.32-11 Exit Tray Removal, 4.32-6
4.32-12 Safety Clip Attachment, 4.32-6
4.32-13 Needle Cartridge Removal, 4.32-6
4.32-14 Needle Assembly Location Grooves, 4.32-7
4.32-15 Needle Assembly Tubing, 4.32-7
4.32-16 Needle Tubing Quick Disconnects, 4.32-8
4.32-17 Needle Assembly Installation, 4.32-8
4.32-18 Safety Clip Removal, 4.32-9
4.32-19 Exit Tray Reinstallation, 4.32-9
4.33-1 Rinse Block Adjusting Screw, 4.33-1
4.34-1 Autoloader Module Guide Rails, 4.34-2
4.34-2 Autoloader Module Removal, 4.34-2
4.35-1 Rocker Bed Removal, 4.35-1

4.35-2 Rocker Bed Hardware, 4.35-2
4.39-1 Bar-Code Scanner Adjustment Screws, 4.39-2
4.40-1 Rocker Bed Linkage, 4.40-1
4.40-2 Rocker Bed Linkage Adjustment, 4.40-2
4.41-1 Specimen Tube Stopper Piercing Proximity, 4.41-1
4.42-1 Index Motor/Index Hub Gap Adjustment, 4.42-1
4.44-1 Needle-Position Sensor Orientation on the Needle Drive Cylinder, 4.44-1
7.3-1 Acceptable DC Noise Display, 7.3-1
7.3-2 Unacceptable DC Noise Display, 7.3-1
7.3-3 Acceptable Static RF Noise Display, 7.3-2
7.3-4 Unacceptable Static RF Noise Display, 7.3-2
7.3-5 Acceptable Dynamic RF Noise, 7.3-3
7.3-6 RF 60 Hz, 7.3-4
7.3-7 RF 60 Hz with Noise Spikes, 7.3-4
7.3-8 Normal RF Random Baseline Bounce, 7.3-4
7.3-9 RF Output with bubble Trapped in Sheath 2, 7.3-5
7.3-10 Normal RF Baseline While Cycling Diluent, 7.3-5
7.3-11 Noisy RF Baseline While Cycling Diluent, 7.3-5
7.3-12 Noisy RF Baseline While Cycling Diluent (RF Noise >100 mV), 7.3-6
7.3-13 LATRON Control Sample with a Good RF Tube and Box, 7.3-6
7.3-14 LATRON Control Sample with a Bad RF Tube and Box, 7.3-6
7.3-15 RF Output Running LATRON Control (Leak at QD7), 7.3-7
7.3-16 LATRON Control Run with DC Gain Drop, 7.3-7
7.3-17 Acceptable Static LS Noise Display, 7.3-8
7.3-18 Unacceptable Static LS Noise Display, 7.3-8
7.3-19 Acceptable Dynamic LS Noise Display, 7.3-9
8.2-1 Main HmX Hematology Analyzer Components Illustrated, 8.2-1
8.2-2 CBC Module, Front View (See Table 8.2-2), 8.2-2
8.2-3 CBC Module, Rear View (See Table 8.2-3), 8.2-4
8.2-4 Mixing Module, Front View (See Table 8.2-4), 8.2-6
8.2-5 Mixing Module, Right Side View (See Table 8.2-5), 8.2-8
8.2-6 Mixing Module, Left Side View (See Table 8.2-6), 8.2-10
8.2-7 BSV Module, Front View (See Table 8.2-7), 8.2-12
8.2-8 BSV Module, Rear View (See Table 8.2-8), 8.2-14
8.2-9 BSV Module, Ball and Slide Assembly (See Table 8.2-9), 8.2-16
8.2-10 Pump Module (See Table 8.2-10), 8.2-18
8.2-11 Rotary Cap-Pierce Module (See Table 8.2-11), 8.2-20
8.2-12 Rotary Cap-Pierce Module, Carousel Assembly (See Table 8.2-12), 8.2-22
8.2-13 Autoloader Module, Front View (See Table 8.2-13), 8.2-24
8.2-14 Autoloader, Rear View (See Table 8.2-14), 8.2-26
8.2-15 Autoloader, Rocker Bed Hardware and Sensors (See Table 8.2-15), 8.2-28
8.2-16 Needle Assembly and Sensors (See Table 8.2-16), 8.2-30
8.2-17 Triple Transducer Module (See Table 8.2-17), 8.2-32
8.2-18 Flow Cell and Laser Assembly (See Table 8.2-18), 8.2-34
8.2-19 Main Diluter Module (See Table 8.2-19), 8.2-36
8.2-20 Electronic Power Supply, Top View (See Table 8.2-20), 8.2-38
8.2-21 Pneumatic Power Supply, Left-Side View (See Table 8.2-21), 8.2-40
8.2-22 Analyzer Module, Card Cage Components (See Table 8.2-22), 8.2-42
8.2-23 Wire Harness Components (See Table 8.2-23), 8.2-44

8.2-24 Electrical Connectors, 8.2-46
A.1-1 Diluent and Lyse Timing Cycle, A.1-7
A.2-1 376 CPU Card Jumper Locations, A.2-1
A.2-2 Autoloader Interface Component Locations, A.2-2
A.2-3 DILUTER INTERFACE Card Component Locations, A.2-3
A.2-4 Fluid Detector/Ram Pressure Card Component Locations, A.2-4
A.2-5 I/O Card Jumper Locations, A.2-5
A.2-6 Peltier Controller Card Connector and LED Locations, A.2-6
A.2-7 Pneumatic Monitor Card Component Locations, A.2-7
A.2-8 RAM Timer Card Jumper Locations, A.2-9
A.2-9 Rocker Bed Interface Card Connector Locations, A.2-10
A.2-10 R/W/P PROC Card Component Locations, A.2-11
A.2-11 Sample Handler Card Component Locations, A.2-12
A.2-12 VCS PROCESSOR Card Component Locations, A.2-14
A.5-1 BSV Module, Front View, A.5-6
A.5-2 BSV Module, Rear View, A.5-7
A.5-3 CBC Module, Front View, A.5-7
A.5-4 CBC Module, Rear View, A.5-8
A.5-5 Main Diluter Module, Front View, A.5-8
A.5-6 Main Diluter Module, Right-Side View, A.5-9
A.5-7 Mixing Module, Front View, A.5-9
A.5-8 Mixing Module, Rear View, A.5-10
A.5-9 Pump Module, A.5-10
A.6-1 HmX Analyzer with Rotary Cap-Pierce Module Software Menu Tree, Revision 1.3, A.6-1
A.6-2 HmX Analyzer with Autoloader Module Software Menu Tree, Revision 1.3, A.6-2
A.6-3 Service Disk Software Utility Menu Tree, A.6-3

TABLES

1.1-1 HmX Analyzer Customer Documents, 1.1-1
2.6-1 Fluid Detector/Ram Pressure Card LED Positions (Viewing from the Rear of the Unit), 2.6-2
2.6-2 Ambient Versus Erythrolyse II Reagent Temperatures, 2.6-4
2.6-3 Temperature Range Cycles, 2.6-4
2.8-1 Rotary Cap-Pierce Module - Motors, Solenoids, and Sensors/Switches, 2.8-1
2.9-1 Autoloader Module - Motors, Solenoids, and Sensors/ Switches, 2.9-1
3.1-1 Fan and Vent Locations, 3.1-2
3.2-1 Deactivator Clip Locations, 3.2-2
4.2-1 DMS Service Menu Options, 4.2-2
4.2-2 Service Disk Utilities Selections/Explanations, 4.2-10
4.9-1 Purpose of VCS Optimization Procedures, 4.9-2
4.26-1 Solenoid Operations, 4.26-1
4.38-1 Moving Around the Microscan Screens, 4.38-3
4.43-1 Switch/Sensor Checks on the HmX Analyzer with Autoloader Module, 4.43-1
4.43-2 Switch/Sensor Checks on the HmX Analyzer with Rotary Cap-Pierce Module, 4.43-5
6.1-1 Schematics Included in This Manual, 6.1-1
6.1-2 Schematics Available for the HmX Analyzer but Not Included in This Manual, 6.1-1
7.1-1 System Error Messages - Symbols and Numbers, 7.1-1
7.1-2 System Error Messages - A and B, 7.1-5
7.1-3 System Error Messages - C, 7.1-6
7.1-4 System Error Messages - D through H, 7.1-12
7.1-5 System Error Messages - I, 7.1-15
7.1-6 System Error Messages - J through P, 7.1-18
7.1-7 System Error Messages - R, 7.1-21
7.1-8 System Error Messages - S, 7.1-23
7.1-9 System Error Messages - T, 7.1-26
7.1-10 System Error Messages - U, 7.1-27
7.1-11 System Error Messages - V through Z, 7.1-29
7.1-12 Internal Instrument Codes, 7.1-30
7.2-1 Flow-Cell Errors, 7.2-1
7.3-1 RF Troubleshooting Table, 7.3-3
7.4-1 RF, DC, or LS Latex Calibration Troubleshooting Table, 7.4-1
7.5-1 Troubleshooting Reported Instrument Problems, 7.5-1
8.1-1 Part Categories, 8.1-1
8.1-2 Accessories, 8.1-1
8.1-3 Autoloader Module, 8.1-2
8.1-4 Bar-Code System, 8.1-4
8.1-5 BSV Module, 8.1-5
8.1-6 CBC Module, 8.1-7
8.1-7 Circuit Cards, 8.1-8
8.1-8 Covers/Doors, 8.1-9
8.1-9 Fuses, 8.1-9
8.1-10 Interconnect Cables, 8.1-10
8.1-11 Main Diluter Module, 8.1-11
8.1-12 Miscellaneous Hardware, 8.1-12

8.1-13 Mixing Module, 8.1-15
8.1-14 Options/Upgrade Kits, 8.1-16
8.1-15 Pickup Tubes and Sensors, 8.1-16
8.1-16 Power Supplies, 8.1-17
8.1-17 Pump Module, 8.1-18
8.1-18 Rotary Cap-Pierce Module, 8.1-19
8.1-19 Shielded Reagent Lines, 8.1-21
8.1-20 Software, 8.1-21
8.1-21 Tools and Supplies, 8.1-22
8.1-22 Triple Transducer Module, 8.1-23
8.1-23 Tubing, 8.1-25
8.2-1 Illustrations Not Referenced from Figure 8.2-1, 8.2-1
8.2-2 CBC Module, Front View (See Figure 8.2-2), 8.2-3
8.2-3 CBC Module, Rear View (See Figure 8.2-3), 8.2-5
8.2-4 Mixing Module, Front View (See Figure 8.2-4), 8.2-7
8.2-5 Mixing Module, Right Side View (See Figure 8.2-5), 8.2-9
8.2-6 Mixing Module, Left Side View (See Figure 8.2-6), 8.2-11
8.2-7 BSV Module, Front View (See Figure 8.2-7), 8.2-13
8.2-8 BSV Module, Rear View (See Figure 8.2-8), 8.2-15
8.2-9 BSV Module, Ball and Slide Assembly (See Figure 8.2-9), 8.2-17
8.2-10 Pump Module (See Figure 8.2-10), 8.2-19
8.2-11 Rotary Cap-Pierce Module (See Figure 8.2-11), 8.2-21
8.2-12 Rotary Cap-Pierce Module, Carousel Assembly (See Figure 8.2-12), 8.2-23
8.2-13 Autoloader Module, Front View (See Figure 8.2-13), 8.2-25
8.2-14 Autoloader, Rear View (See Figure 8.2-14), 8.2-27
8.2-15 Autoloader Module, Rocker Bed Sensors and Hardware (See Figure 8.2-15), 8.2-29
8.2-16 Autoloader Module Needle Assembly and Sensors (See Figure 8.2-16), 8.2-31
8.2-17 Triple Transducer Module (See Figure 8.2-17), 8.2-33
8.2-18 Flow-Cell and Laser Assembly (See Figure 8.2-18), 8.2-35
8.2-19 Main Diluter Module (See Figure 8.2-19), 8.2-37
8.2-20 Electronic Power Supply, Top View (See Figure 8.2-20), 8.2-39
8.2-21 Pneumatic Power Supply, Left-Side View (See Figure 8.2-21), 8.2-41
8.2-22 Analyzer Module, Card Cage Components (See Figure 8.2-22), 8.2-43
8.2-23 Wire Harness Components (See Figure 8.2-23), 8.2-45
8.2-24 Electrical Connectors, 8.2-46
A.1-1 Acceptable Cal Factor Ranges, A.1-1
A.1-2 Acceptable CV Limits for Initial Adjustments to 5C Cell Control, A.1-1
A.1-3 CBC Latex Calibration, A.1-1
A.1-4 RMS Noise Checks - CBC, A.1-2
A.1-5 Primary/Secondary-Mode Background Counts, A.1-2
A.1-6 Primary/Secondary-Mode Carryover Limits, A.1-2
A.1-7 Retic Mode-to-Mode and Within-Mode Carryover Limits*, A.1-2
A.1-8 Acceptable Blood Parameter Limits for Reproducibility Specimen, A.1-3
A.1-9 Acceptable Manual Diff Limits for Reproducibility Specimen, A.1-3
A.1-10 CBC and Diff Reproducibility Limits, A.1-4
A.1-11 Retics Reproducibility Limits, A.1-4
A.1-12 Secondary Mode-to-Primary Mode Comparison Limits, A.1-4
A.1-13 Pressure and Vacuum Tolerances, A.1-5
A.1-14 Input Line Interference Limits, A.1-5

A.1-15 Typical Power Consumption at 120 Vac, A.1-6
A.1-16 Diluent and Lyse Timing Acceptable Choke Combinations, A.1-7
A.1-17 LATRON™ Primer Background Limits, A.1-8
A.1-18 LATRON™ Control Calibration and Verification Limits, A.1-8
A.1-19 LS Offset Voltage, A.1-8
A.1-20 Noise Checks - Diff and Retic, A.1-8
A.1-21 Hgb Blank Voltage, A.1-9
A.1-22 Blood/Bubble Detectors Tolerances, A.1-9
A.1-23 System Voltage Ranges, A.1-9
A.1-24 Aspiration Pump Volume Tolerances, A.1-10
A.1-25 Diluent Dispenser Volume Specifications and Tolerances, A.1-10
A.2-1 376 CPU Card Jumper Settings (See Figure A.2-1), A.2-1
A.2-2 Autoloader Interface Card Connectors (See Figure A.2-2), A.2-2
A.2-3 Fluid Detector/Ram Pressure Card Connectors (See Figure A.2-4), A.2-4
A.2-4 Fluid Detector/Ram Pressure Card LED Positions (See Figure A.2-4), A.2-4
A.2-5 Peltier Controller Card Connectors and LEDs (See Figure A.2-6), A.2-6
A.2-6 Pneumatic Monitor Card Pneumatic Reading to Vdc Conversion (See Figure A.2-7), A.2-8
A.2-7 Rocker Bed Interface Card Connectors (See Figure A.2-9), A.2-10
A.2-8 R/W/P PROC Card Jumper Settings (See Figure A.2-10), A.2-11
A.2-9 R/W/P PROC Card Test Points (See Figure A.2-10), A.2-11
A.2-10 Sample Handler Card Connectors (See Figure A.2-11), A.2-12
A.2-11 Sample Handler Card Jumper Settings (See Figure A.2-11), A.2-12
A.2-12 Sample Handler Card LED Functions (See Figure A.2-11), A.2-13
A.2-13 VCS PROCESSOR Card Test Points (See Figure A.2-12), A.2-14
A.3-1 Input Power Switch Settings, A.3-1
A.3-2 Fuse Ratings and Functions, A.3-1
A.3-3 Electronic Power Supply Terminal Card Jumpers and Connections, A.3-2
A.3-4 Electronic Power Supply Test Points and Adjustments, A.3-2
A.3-5 Laser Power Supply Buck-Boost Transformer Jumpers and Connections, A.3-4
A.3-6 Pneumatic Power Supply Buck-Boost Transformer Terminal Card Jumpers and Connections, A.3-4
A.4-1 Bar-Code Reader Decoder Card Code Types Default Settings, A.4-1
A.4-2 Bar-Code Reader Decoder Card Communications Default Settings, A.4-1
A.4-3 Bar-Code Reader Decoder Card Operations Default Settings, A.4-2
A.4-4 Bar-Code Reader Decoder Card User Outputs Default Settings, A.4-2
A.5-1 Diluter Component Location References and Functions, A.5-1

1 INTRODUCTION, 1.1-1

1.1 MANUAL DESCRIPTION, 1.1-1
Scope, 1.1-1
Intended Audience, 1.1-2
Organization, 1.1-3
Numbering Format, 1.1-4
Special Headings, 1.1-4
WARNING, 1.1-4
CAUTION, 1.1-4
IMPORTANT, 1.1-4
ATTENTION, 1.1-4
Note, 1.1-4
Conventions, 1.1-5

1.2 SAFETY PRECAUTIONS, 1.2-1
Laser, 1.2-1
Laser Beam Hazards, 1.2-1
Laser Radiation Hazards, 1.2-2
Electronic, 1.2-4
Biological, 1.2-4
Troubleshooting, 1.2-5

ILLUSTRATIONS

1.2-1 Triple Transducer Module Laser Warning and Certification Labels, 1.2-2
1.2-2 Bar-Code Reader Laser Warning Labels on the Rotary Cap-Pierce Module, 1.2-3
1.2-3 Bar-Code Reader Laser Warning Labels on the Autoloader Module, 1.2-3

TABLES

1.1-1 HmX Analyzer Customer Documents, 1.1-1

CONTENTS

1.1 MANUAL DESCRIPTION

Scope

This manual provides the reference information and procedures needed for servicing and maintaining the Main Unit of the COULTER® HmX hematology analyzer and the COULTER HmX hematology analyzer with Autoloader. It is available both online and in hard copy. The online manual is released on the Service Resource Kit CD-ROM, PN 641747.

This manual is to be used in conjunction with the COULTER HmX Hematology Analyzer and COULTER HmX Hematology Analyzer with Autoloader customer documents and does not contain information and procedures already covered in those documents.

Table 1.1-1 lists the customer documents available.

Table 1.1-1 HmX Analyzer Customer Documents

Instrument	Document	Language	PN
HmX hematology analyzer	Hematology Histograms CBT	English	4237153
	Host Transmission Specification	English	4237518
	Master Index	English	4237524
	Operator's Guide	English	4237519
		French	4237567
		German	4237577
		Italian	4237572
		Japanese	4237587
		Spanish	4237582
	Operator's Training Workbook	English	4237518
	Reference Manual	English	4237523
	Special Procedures and Troubleshooting	English	4237520
		French	4237565
		German	4237575
		Italian	4237570
		Japanese	4237585
		Spanish	4237580

Table 1.1-1 HmX Analyzer Customer Documents *(Continued)*

Instrument	Document	Language	PN
HmX hematology analyzer with Autoloader	Hematology Histograms CBT	English	4237153
	Host Transmission Specification	English	4237518
	Master Index	English	4237525
	Operator's Guide	English	4237521
		Chinese	4237447
		French	4237566
		German	4237576
		Italian	4237571
		Japanese	4237586
		Spanish	4237581
	Operator's Training Workbook	English	4237518
	Reference Manual	English	4237253
	Special Procedures and Troubleshooting	English	4237522
		French	4237564
		German	4237574
		Italian	4237569
		Japanese	4237584
		Spanish	4237579

To service the DMS, refer to the DMS Configuration Listing for STKS™, MAXM™, and HmX Series Systems, PN 4276614.

Any service memo that affects the information in this manual will include either minor revision change pages or a Notice of Information Update form for this manual. A Notice of Information Update form will summarize the changes and will list the specific headings, figures, and tables affected.

Intended Audience

To use this manual effectively, you need the following:

- An operator's knowledge of the HmX hematology analyzer
- Service training on the HmX hematology analyzer
- A thorough understanding of -
  - Basic electronic and pneumatic principles and devices
  - Hematology terms and concepts
  - The Coulter Principle
  - VCS technology
  - COULTER Histogram Differential and Interpretive Reporting
  - Reagent systems

  - Quality control
  - Troubleshooting techniques.
- The ability to -
  - Read pneumatic/hydraulic schematics and understand related terminology
  - Read electronic schematics and understand related terminology
  - Use a digital multimeter and an oscilloscope
  - Use basic mechanical tools and understand related terminology.

Organization

The information in this manual is organized into10 chapters. To make it easier to access the information:

- In the online manual, each page or screen has -
  - A Contents button linked to a master table of contents
  - An Illustrations button linked to a list of illustrations
  - A Tables button linked to a list of tables
  - An Index button linked to an alphabetic index.
- In the printed manual, there is a master table of contents (including master lists of the illustrations and the tables) at the beginning of the manual, a chapter-specific table of contents at the beginning of each chapter, and an alphabetic index at the end of the manual.

CHAPTER 1, INTRODUCTION, includes a brief description of this manual, a list of supporting documents, and essential safety information.

CHAPTER 2, INSTRUMENT DESCRIPTION, includes the function and location of each major HmX analyzer component and an explanation of the instrument's operation.

CHAPTER 3, INSTALLATION PROCEDURES, contains the procedures used to install the HmX analyzer.

CHAPTER 4, SERVICE AND REPAIR PROCEDURES, contains the procedures used to service and repair the HmX analyzer. When it is applicable, the reason for doing a procedure and any special tools or equipment needed are listed before the instructions.

CHAPTER 5, MAINTENANCE PROCEDURES, contains the procedures used to maintain the HmX analyzer and to verify the system is operating correctly.

CHAPTER 6, SCHEMATICS, is provided for the insertion of HmX analyzer schematics.

CHAPTER 7, TROUBLESHOOTING, contains problem descriptions, including a complete list of error messages, with troubleshooting actions and tips. Use the information in this chapter in conjunction with the procedures in Chapter 4 to locate and correct instrument problems.

CHAPTER 8, PARTS LISTS, includes a master list of the HmX analyzer field replaceable components (FRC) and field replaceable units (FRU) and illustrations of these components.

CHAPTER 9, APPENDICES, is provided for the addition of reference material and includes Appendix A, QUICK REFERENCE INFORMATION. Appendix A contains instrument specifications and tolerances; circuit card and power supply jumper and switch settings and test point values; and software menu trees.

CHAPTER 10 contains a list of **ABBREVIATIONS** used in this manual.

Numbering Format

Each chapter of this manual is further divided into topics, which are numbered sequentially, beginning at one. The numbering format for the topic heading, which is called the primary heading, is chapter number, decimal point, topic number. For example, the primary heading number for the fifth topic covered in Chapter 2 is 2.5.

The page, figure and table numbers are tied directly to the primary heading number. For example, Heading 2.5 begins on page 2.5-1, the first figure under Heading 2.5 is Figure 2.5-1, and the first table under Heading 2.5 is Table 2.5-1.

Note: Primary headings always begin on the top of a right-hand page.

Special Headings

Throughout this manual, WARNING, CAUTION, IMPORTANT, ATTENTION, and Note headings are used to indicate potentially hazardous situations and important or helpful information.

WARNING

A WARNING indicates a situation or procedure that, if ignored, can cause serious personal injury. The word WARNING is in bold-faced text in the printed manual and is red in the online manual.

CAUTION

A CAUTION indicates a situation or procedure that, if ignored, can cause damage to equipment. The word CAUTION is in bold-faced text in the printed manual and is red in the online manual.

IMPORTANT

An IMPORTANT indicates a situation or procedure that, if ignored, can result in erroneous test results. The word IMPORTANT is in bold-faced text in the printed manual and is red in the online manual.

ATTENTION

An ATTENTION contains information that is critical for the successful completion of a procedure and/or operation of the instrument. The word ATTENTION is in bold-faced text in the printed manual and is red in the online manual.

Note

A Note contains information that is important to remember or helpful in performing a procedure. The word Note is in bold-faced text.

Conventions

This manual uses the following conventions to make the material clearer and more concise, or to enhance access speed in the electronic version of the manual. An example is given below each explanation.

1. Messages that appear on a screen are in italics.

   The instrument processes the request and displays *S/A 2 °MODE ON* in the System Status field.

2. Selections that appear on a screen are boldfaced.

   Select **Waste = OFF** if the unit is draining directly into a plumbing system.

3. Information that is to be typed is in Courier font.

   Type the password `SERVICE`, then press Enter.

4. Keys on the DMS are boxed.

   Press F10 to save data and escape.

5. Keys that are to be pressed simultaneously are printed with a plus sign between the keys.

   Press F6 then Alt+F6 to display the average histograms for both RBC and WBC.

6. The software path to a specific function or screen appears with the double solid-right triangle (▸▸) symbol between succeeding screen options.

   From the Special Functions menu, select **Diagnostics ▸▸ Operator Options ▸▸ Fluidic Test ▸▸ Disable Reagent Sensors.**

7. When the word "select" is used in conjunction with the screen and its associated keys, you are to press the key or keys necessary to display the desired screen or to initiate the desired function.

   Select the Calibration Reproducibility screen (**Special Functions ▸▸ Calibration ▸▸ Reproducibility**).

8. In the electronic version of the manual:

   a. Links to additional information are in blue and are underlined.

      Activate the service options as directed under Heading 4.2, USING THE SERVICE DISK.

      To access the linked information, select the blue, underlined text.

   b. The material is divided into many small sections (electronic files).

      - Every primary heading is a separate file and whenever possible the amount of material contained within one primary heading is limited to four to ten pages.
      - If a primary heading must be large, such as the illustrated parts list, invisible breaks are added to the electronic file to further divide it.

      To move from one section (electronic file) to the next in an HTML version of the manual, use the right and left arrows on the navigation bars displayed at the top and bottom of each section.

9. Unless otherwise noted, left/right orientation to components is presented as if you are looking at the front of the instrument.

1.2 SAFETY PRECAUTIONS

Laser

Laser Beam Hazards

WARNING Risk of personal injury. The laser beam can cause eye damage if viewed either directly or indirectly from reflective surfaces (such as a mirror or shiny metallic surface). Avoid direct exposure to the beam. Do not view it directly or with optical instruments except from special service tools as directed in this manual.

Because the system contains a laser, the customer should keep it isolated from nonlaser instruments. The customer should also keep a copy of ANSI standard 136.1, SAFE USE OF LASERS, near the instrument for ready reference. Copies are available from:

American National Standards Institute
1430 Broadway
New York, NY 10018

The laser, located in the Triple Transducer module (TTM), is a unique light source that shows characteristics different from conventional light sources. The safe use of the laser depends upon familiarity with the instrument and with the properties of coherent, intense beams of light.

Eye and skin damage, as well as instrument damage, can be caused by the laser beam. The laser has enough power to ignite substances placed in the beam path, even at a distance. Specular reflection results from indirect contact with the laser beam from reflective surfaces, such as jewelry, and can cause damage. Follow these precautions when working near an exposed laser:

- Never look directly into the laser light source or at scattered laser light from any reflective surface.
- It is recommended that you wear proper laser safety glasses when performing service or maintenance on the system. The glasses help prevent accidental exposure to the output beam and its reflection.
- Do not use lasers in the presence of flammables or explosives; these include volatile substances such as alcohol, solvents, and ether.
- Avoid direct exposure and indirect reflection of the laser beam to your skin.
- Assure that any spectators are not potentially exposed to a hazardous condition.
- Do not leave the laser unattended if there is a chance that an unauthorized person may attempt to use it.

Laser Radiation Hazards

WARNING Risk of personal injury from radiation exposure. Performing procedures other than those specified in this manual could result in hazardous radiation exposure. Do not use any controls, make any adjustments, or perform any procedures other than those specified in this manual.

In its design and manufacture of the HmX analyzer, Coulter Corporation has complied with the requirements governing the use and application of a laser as stipulated in regulatory documents issued by the U.S. Department of Health and Human Services, and by the Center for Devices and Radiological Health (CDRH). In compliance with these regulatory documents, every measure has been taken to ensure the health and safety of users, laboratory personnel, and service personnel from the possible dangers of laser use. The laser is classified as Class I when it is in the system with the protective housing in place.

Note: As installed in the Triple Transducer Module (TTM) safety fixture, the laser presents no radiation hazard to users and the instrument complies with 21 CFR 1040.

CDRH-approved labels are placed near or on those covers that when removed might expose laser radiation. Figures 1.2-1, 1.2-2, and 1.2-3 show the Warning and Certification labels. The HmX analyzer is a Class I laser product per BS 60825.

Figure 1.2-1 Triple Transducer Module Laser Warning and Certification Labels

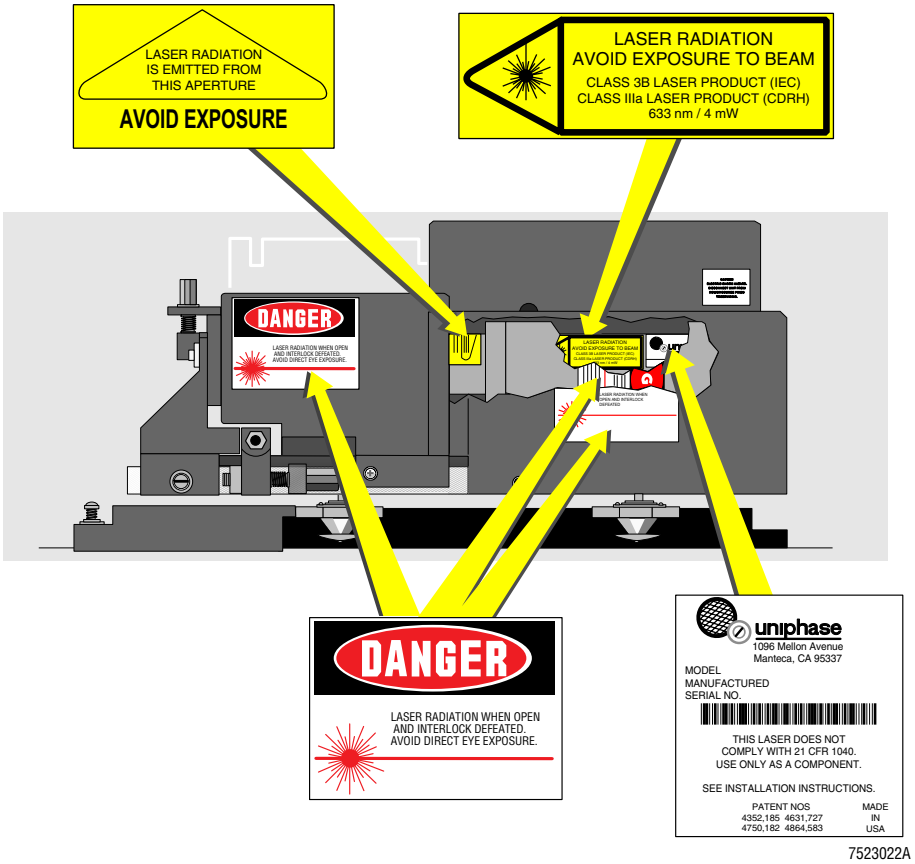

Figure 1.2-2 Bar-Code Reader Laser Warning Labels on the Rotary Cap-Pierce Module

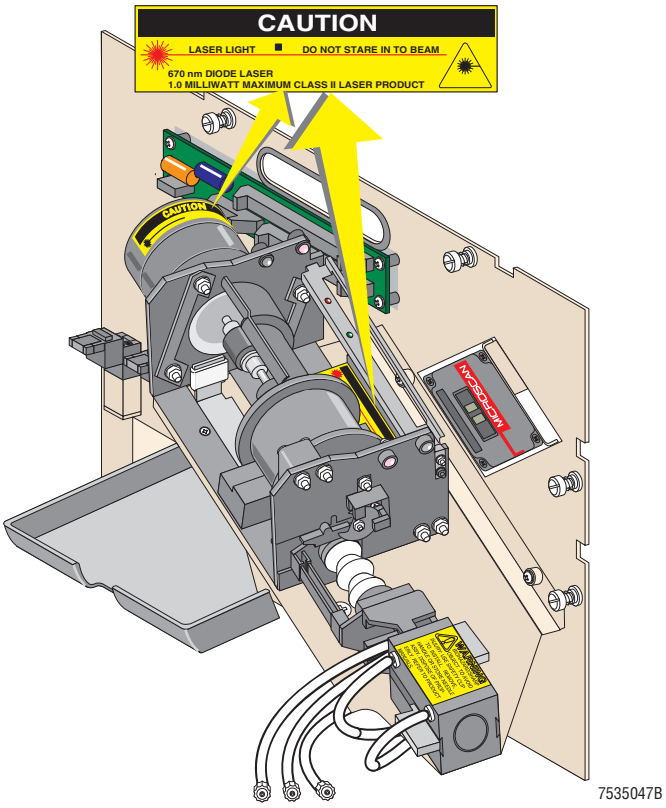

Figure 1.2-3 Bar-Code Reader Laser Warning Labels on the Autoloader Module

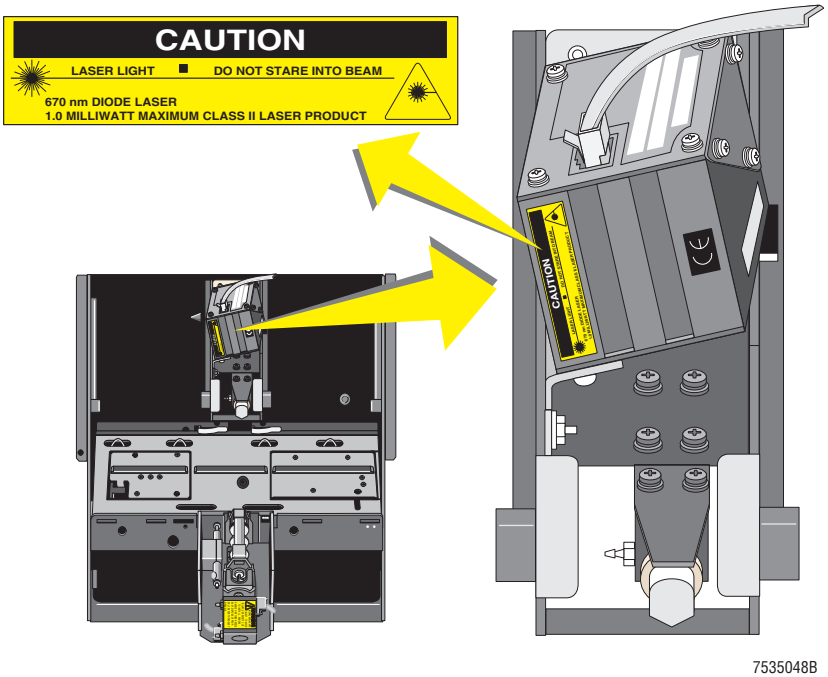

Electronic

WARNING Risk of personal injury. Rings or jewelry can contact exposed electronic components, causing personal injury from electric shock. Remove rings and other metal jewelry before performing maintenance or service on the electronic components of the instrument.

WARNING Risk of personal injury. Contacting exposed electronic components while the instrument is attached to power can cause personal injury from electric shock. Power down completely before removing covers to access electronic components.

CAUTION Risk of damage to electronic components. Connecting or disconnecting a circuit card, solenoid, or any other electronic component while the power is ON can damage the component or the circuitry for the component. Turn OFF the instrument before disconnecting or connecting an electronic component.

CAUTION Risk of damage to electronic components. Electrostatic discharge (ESD) can damage disk drives, add-in circuit cards, and other electronic components. Perform any procedures where there is a possibility of ESD damage at an ESD workstation, or wear an antistatic wrist strap attached to a metal part of the chassis connected to an earth ground.

CAUTION Risk of fire hazard. Replacing a fuse of fuse holder with the incorrect type or rating can overheat the wiring. Always replace a fuse or fuse holder with the type and rating specified for that circuit.

Biological

WARNING Risk of personal injury or contamination. If you do not properly shield yourself before servicing the HmX analyzer with the door open, you can be injured or contaminated. To prevent possible injury or contamination, always wear gloves, a lab coat and eye protection when servicing the instrument with the doors open.

WARNING Risk of contamination. Biohazardous contamination can occur from contact with the waste container and its associated tubing if not handled with care. Wear protective gear. Avoid skin contact. Clean up spills immediately. Dispose of the contents of the waste container in accordance with the local regulations and acceptable laboratory procedures.

Take care when working with pathogenic materials. Means must be available to decontaminate the instrument, to ventilate air, and to dispose of waste liquid. Refer to the following publications for further guidance on decontamination.

- Biohazards Safety Guide, 1974, National Institute of Health.
- Classifications of Etiological Agents on the Basis of Hazards, 3d ed., July 1974, Center for Disease Control, U.S. Public Health Service.

Troubleshooting

Bring the following warning to the customer's attention before advising that customer to perform any service, maintenance or troubleshooting procedures on the instrument.

WARNING Risk of personal injury or contamination. If you do not properly shield yourself while performing service, maintenance and troubleshooting procedures, residual fluids in the instrument can injure or contaminate you. Coulter recommends barrier protection, such as appropriate safety glasses, lab coat, and gloves, be worn throughout the performance of service, maintenance and troubleshooting procedures to avoid contact with cleaners and residual fluids in the instrument.

2 INSTRUMENT DESCRIPTION, 2.1-1

2.1 INTRODUCTION TO THE COULTER HmX ANALYZER, 2.1-1
Function, 2.1-1
Description, 2.1-1
Main Components, 2.1-1
Systems, 2.1-4
Physical Specifications, 2.1-4
Performance Specifications and Characteristics, 2.1-4
Leakage Current Specifications, 2.1-5
Operation, 2.1-5
Modes of Operation, 2.1-5
Operating Procedures, 2.1-6

2.2 ELECTRONIC SYSTEM - OVERVIEW AND POWER SUPPLIES, 2.2-1
Electronic System Overview, 2.2-1
Electronic Power Supply, 2.2-1
Components, 2.2-1
Function, 2.2-2
Color Coding, 2.2-3
Connectors, 2.2-4
Specifications, 2.2-4
Voltage Configurations, 2.2-4
Fuses, 2.2-4
Laser Power Supply, 2.2-4
Function, 2.2-4
RF Power Supply, 2.2-4
Components, 2.2-4
Function, 2.2-4
Voltage Monitoring, 2.2-4

2.3 ELECTRONIC SYSTEM - SIGNAL FLOW BLOCK DIAGRAMS, 2.3-1

2.4 ELECTRONIC SYSTEM - ANALYZER MODULE, 2.4-1
Function, 2.4-1
Description, 2.4-1
376 CPU Card, 2.4-2
Description, 2.4-2
Software Download Sequence, 2.4-2
Jumpers for the 376 CPU Card, 2.4-3
376 CPU Card Inputs/Outputs, 2.4-3
RAM Timer Card, 2.4-3
Jumpers for the RAM Timer Card, 2.4-3
DILUTER INTERFACE Card, 2.4-4
Function, 2.4-4
Lyse Trigger Test Point, 2.4-4
Jumper, 2.4-4
DILUTER INTERFACE Card Inputs/Outputs, 2.4-4

I/O Card, 2.4-6
Function, 2.4-6
Jumpers, 2.4-7
I/O Card Inputs/Outputs, 2.4-7
VCS PROCESSOR Card, 2.4-8
Function, 2.4-8
Noise Levels, 2.4-9
Jumper, 2.4-9
VCS PROCESSOR Card Inputs/Outputs, 2.4-9
R/W/P PROC Card, 2.4-9
Function, 2.4-9
RBC and WBC Counting Sequences, 2.4-10
RBC and WBC Voting Criteria, 2.4-10
WBC, RBC and Plt Histogram Development, 2.4-10
Data Transfer Method for Histogram Development, 2.4-10
Voting Criteria for Histogram-Derived Parameters, 2.4-13
Noise Levels, 2.4-13
Jumpers, 2.4-13
R/W/P PROC Card Inputs/Outputs, 2.4-13
R/W PREAMP Card, 2.4-14
Function, 2.4-14
R/W PREAMP Card Inputs/Outputs, 2.4-14

2.5 PNEUMATIC SYSTEM, 2.5-1
Pneumatic Power Supply, 2.5-1
Components, 2.5-1
Function, 2.5-1
Voltage Configurations, 2.5-2
Fuse, 2.5-2
Pressure and Vacuum Distribution, 2.5-2
60-psi Pressure Distribution, 2.5-2
30-psi Pressure Distribution, 2.5-3
Sheath Pressure Distribution, 2.5-3
Sample Pressure Distribution, 2.5-3
High Vacuum Distribution, 2.5-3
Low Vacuum Distribution, 2.5-3
Pneumatic Monitor Card, 2.5-3

2.6 REAGENT SYSTEM, 2.6-1
Reagent Input and Distribution, 2.6-1
Reagent Monitoring, 2.6-1
Fluid Detector/Ram Pressure Card, 2.6-1
Function, 2.6-1
Connectors, 2.6-2
Reagent Temperature Control, 2.6-2
Peltier Module Description, 2.6-2
Peltier Module Function, 2.6-3
Temperature Range Cycles, 2.6-4
Waste Removal and Monitoring, 2.6-5

2.7 SAMPLE HANDLER SYSTEM - SAMPLE HANDLER CARD, 2.7-1
Function, 2.7-1
LEDs, 2.7-1
Responses During Power Up, 2.7-1
Responses During Download, 2.7-3
Responses to the Carousel Position in the Rotary Cap-Pierce Module, 2.7-4
Response to a Power Fluctuation, 2.7-4
Ensuring the Instrument and the Sample Handler Configurations Match, 2.7-4
Avoiding Instrument Damage During a Download, 2.7-4
Jumpers, 2.7-5
Sample Handler Card Inputs/Outputs, 2.7-5

2.8 SAMPLE HANDLER SYSTEM - ROTARY CAP-PIERCE MODULE, 2.8-1
Function, 2.8-1
Description, 2.8-1
Summary of Operation, 2.8-3
RCP Junction Card, 2.8-4
Function, 2.8-4
RCP Junction Card Inputs/Outputs, 2.8-4

2.9 SAMPLE HANDLER SYSTEM - AUTOLOADER MODULE, 2.9-1
Function, 2.9-1
Description, 2.9-1
Summary of Operation, 2.9-5
Autoloader Interface Card, 2.9-7
Function, 2.9-7
Autoloader Interface Card Inputs/Outputs, 2.9-8
Rocker Bed Interface Card, 2.9-8
Function, 2.9-8
Rocker Bed Interface Card Inputs/Outputs, 2.9-9

2.10 SAMPLE HANDLER SYSTEM - AUTOSENSOR TEST CARD, 2.10-1

2.11 SAMPLE PROCESSING SYSTEM - DILUTER, 2.11-1
Function, 2.11-1
Description, 2.11-1
Main Components, 2.11-1
Solenoid Valves, 2.11-1
Blood Sampling Valve (BSV), 2.11-2
Blood/Bubble Detectors, 2.11-3
Sample Processing, 2.11-4
Primary-Mode Aspiration, 2.11-4
WBC/RBC Sample Delivery, 2.11-5
Diff Segmentation, 2.11-6
Diff Segment and Erythrolyse II Reagent Delivery, 2.11-6
Cross Rinse to the Baths, 2.11-7
Secondary-Mode Aspiration, 2.11-7
Pre-Prep/Latex Aspiration, 2.11-8
RBC Sample Delivery, Secondary Mode, 2.11-9
Backwash Functions, 2.11-10

2.12 SAMPLE ANALYSIS SYSTEM - CBC TECHNOLOGY, 2.12-1
Summary, 2.12-1
Applying the Coulter Principle, 2.12-1
Sensing Area, 2.12-1
Aperture Current, 2.12-1
Aperture Vacuum, 2.12-2
Analyzing the RBC, WBC, and Plt Data, 2.12-2
Determining the Hgb, 2.12-2

2.13 SAMPLE ANALYSIS SYSTEM - VCS TECHNOLOGY, 2.13-1
Summary, 2.13-1
VCS Measurements, 2.13-1
V - Volume (DC), 2.13-1
C - Conductivity (RF), 2.13-1
S - Light Scatter (LS), 2.13-1
Opacity (OP), 2.13-2
Rotated Light Scatter (RLS), 2.13-2
Linear Light Scatter (LLS), 2.13-2
Applying the VCS Technology, 2.13-2
Sensing Area, 2.13-2
DC and RF Currents, 2.13-2
Laser Light Source, 2.13-2
Flow-Cell Hydraulics, 2.13-3
Analyzing the Data, 2.13-5
Preprocessing, 2.13-5
RF Detector Preamp Card, 2.13-5
Function, 2.13-5
RF Detector Preamp Card Inputs/Outputs, 2.13-6
LS Preamp 5 Module, 2.13-6
Primary Function, 2.13-6
Mode Select, 2.13-7
LS Offset Voltage, 2.13-7
LS Preamp 5 Module Inputs/Outputs, 2.13-8

ILLUSTRATIONS

2.1-1 Main Unit with Rotary Cap-Pierce Module, Front View, Main Component Locations, 2.1-2
2.1-2 Main Unit with Autoloader Module, Front View, Main Component Locations, 2.1-2
2.1-3 Main Unit Rear View, Main Component Locations, 2.1-3
2.1-4 Main Unit Right-Side View, Main Component Locations, 2.1-3
2.1-5 Main Unit Left-Side View, Main Component Locations, 2.1-4

2.2-1 Electronic Power Supply, Front View, 2.2-2
2.2-2 Electronic Power Supply Components, Top View, Cover Removed, 2.2-3

2.3-1 Signal Flow Block Diagram (HmX Analyzer with Rotary Cap-Pierce Module), 2.3-1
2.3-2 Signal Flow Block Diagram (HmX Analyzer with Autoloader Module), 2.3-2

2.4-1 Circuit Card Locations in the Card Cage, 2.4-1
2.4-2 Initial DMS to Instrument Download, 2.4-2
2.4-3 Subsequent DMS to Instrument Download, 2.4-3
2.4-4 DIILUTER INTERFACE Card and Solenoid Junction Card Block Diagram, 2.4-5
2.4-5 I/O Card Block Diagram, 2.4-6
2.4-6 VCS PROCESSOR Card Block Diagram, 2.4-8
2.4-7 R/W/P PROC Card and R/W PREAMP Card Block Diagram, 2.4-11

2.5-1 Pneumatic Power Supply Components, Left-Side View, Compressor Sub-Panel Removed, 2.5-1
2.5-2 Pressure and Vacuum Air Tank Locations, 2.5-2
2.5-3 Pneumatic Monitor Card Block Diagram, 2.5-4
2.5-4 Monitoring Sequence During Compressor Bleed, 2.5-5

2.6-1 Peltier Controller Card, 2.6-3

2.7-1 Sample Handler Card with Autoloader Module Block Diagram, 2.7-2
2.7-2 Sample Handler Card with Rotary Cap-Pierce Module Block Diagram, 2.7-3

2.8-1 Rotary Cap-Pierce Module Components, 2.8-2

2.9-1 Autoloader Module Components, Front View, Rocker Bed Forward, 2.9-3
2.9-2 Autoloader Module, Front View, Rocker Bed Backward, 2.9-4
2.9-3 Autoloader Module Components, Rear View, 2.9-4

2.10-1 Autosensor Test Card - LEDs Lit Following Power Up, 2.10-1

2.11-1 Solenoid and Tubing Label, 2.11-2
2.11-2 BSV Ports and Wire Markers, 2.11-3
2.11-3 BSV Flow Paths and Wire Markers, 2.11-3
2.11-4 Primary-Mode Aspiration, 2.11-5
2.11-5 WBC/RBC Sample Delivery, 2.11-5
2.11-6 Diff Segmentation, 2.11-6
2.11-7 Diff Segment and Erythrolyse II Reagent Delivery to Mixing Chamber, 2.11-6
2.11-8 Cross Rinse to the Baths, 2.11-7
2.11-9 Secondary-Mode Aspiration, 2.11-8
2.11-10 Pre-Prep Latex Aspiration, 2.11-9
2.11-11 Sample Delivery, Secondary-Mode, 2.11-9
2.11-12 Backwash Functions, 2.11-10

2.12-1 Applying the Coulter Principle, 2.12-1

2.13-1 Applying the VCS Technology, 2.13-3
2.13-2 Light Scatter Path, 2.13-3
2.13-3 Hydrodynamically Focused Cells, 2.13-4
2.13-4 Flow Cell Hydraulics, 2.13-4
2.13-5 RF Detector Preamp Card Signal Flow, 2.13-6
2.13-6 LS Preamp 5 Module Block Diagram, 2.13-7
2.13-7 LS Sensor Regions, 2.13-7

TABLES

2.6-1 Fluid Detector/Ram Pressure Card LED Positions (Viewing from the Rear of the Unit), 2.6-2
2.6-2 Ambient Versus Erythrolyse II Reagent Temperatures, 2.6-4
2.6-3 Temperature Range Cycles, 2.6-4

2.8-1 Rotary Cap-Pierce Module - Motors, Solenoids, and Sensors/Switches, 2.8-1

2.9-1 Autoloader Module - Motors, Solenoids, and Sensors/ Switches, 2.9-1

2.1 INTRODUCTION TO THE COULTER HmX ANALYZER

Function

The HmX analyzer is an automated hematology analyzer and leukocyte differential counter For In Vitro Diagnostic Use in clinical laboratories. The HmX analyzer reports a complete blood count (CBC) and white blood cell differential from whole blood.

The CBC consists of a white blood cell count (WBC), red blood cell count (RBC), hemoglobin (Hgb), mean corpuscular volume (MCV), hematocrit (Hct), mean corpuscular hemoglobin (MCH), mean corpuscular hemoglobin concentration (MCHC), red cell distribution width (RDW), platelet count (Plt) and mean platelet volume (MPV).

The WBC differential consists of the percent and number of the following WBC populations: lymphocytes (LY% and LY#), monocytes (MO% and MO#), neutrophils (NE% and NE#), basophils (BA% and BA#) and eosinophils (EO% and EO#).

The HmX analyzer also reports the percent and number of reticulocytes (RET% and RET#) from prepared whole-blood samples.

In addition, the HmX analyzer generates platelet parameters that are "For Research Use Only. Not For Use In Diagnostic Procedures." These parameters are the plateletcrit (Pct) and the platelet distribution width (PDW).

For a description of the methodologies used to derive the CBC, and to derive the diff and retic parameters, refer to Chapter 3 of the customer's Reference manual.

Description

Main Components

The HmX analyzer consists of the Main Unit and the Data Management System (DMS). The Main Unit comprises the:

- Electronic Power Supply
- Pneumatic Power Supply
- Analyzer/Systems Control module (commonly referred to as the Analyzer module)
- Sample Handler. Two Sample Handler modules are available, the Rotary Cap-Pierce module and the Autoloader module.
- Diluter. The Diluter is further divided into six modules -
  - BSV module
  - CBC module
  - Main Diluter module
  - Mixing module
  - Flow-Cell module (commonly referred to as the Triple Transducer module or TTM)
  - Pump module

Figures 2.1-1 through 2.1-5 show the locations of the main components/modules in the Main Unit.

The DMS comprises the computer and its monitor, keyboard, and software. For details about the DMS, see the DMS Configuration Listing for STKS™, MAXM™, and HmX Series Systems.

Figure 2.1-1 Main Unit with Rotary Cap-Pierce Module, Front View, Main Component Locations

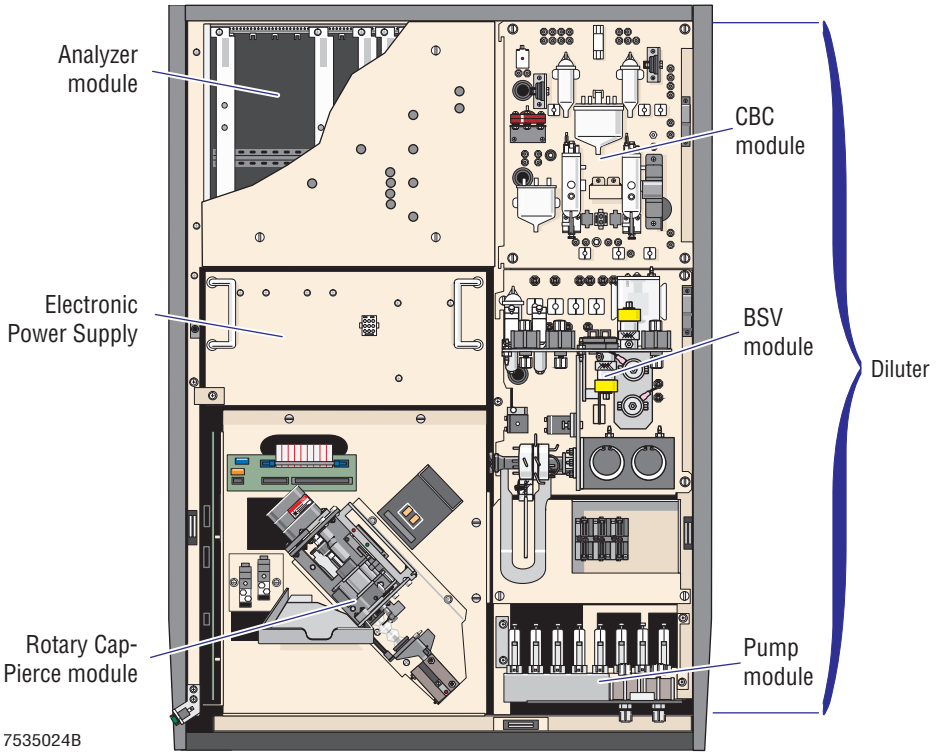

Figure 2.1-2 Main Unit with Autoloader Module, Front View, Main Component Locations

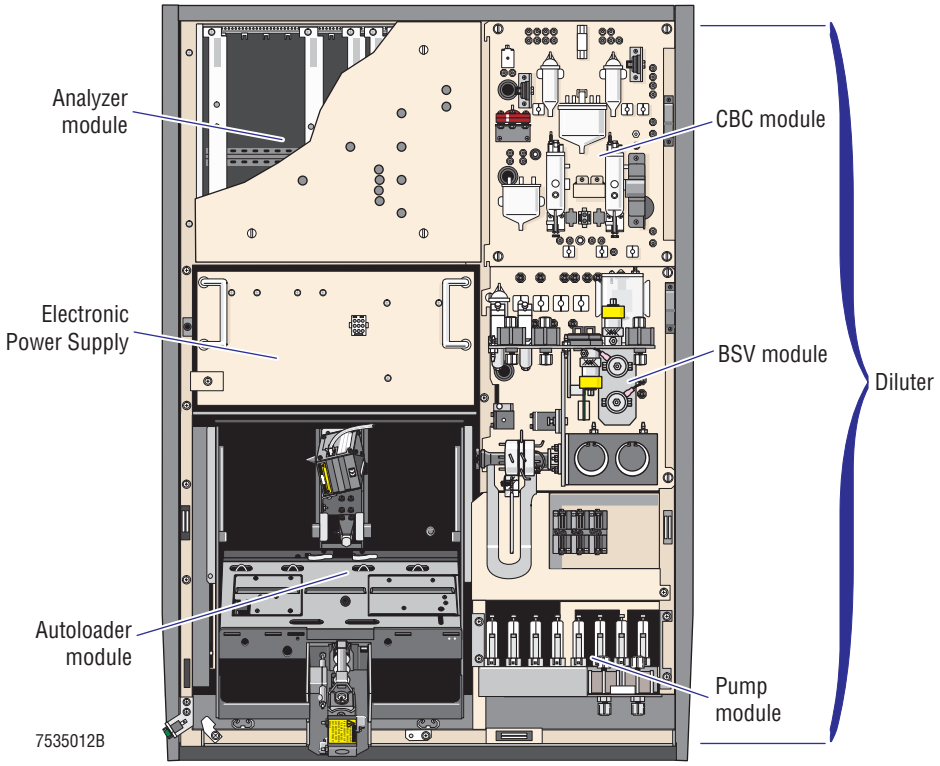

Figure 2.1-3 Main Unit Rear View, Main Component Locations

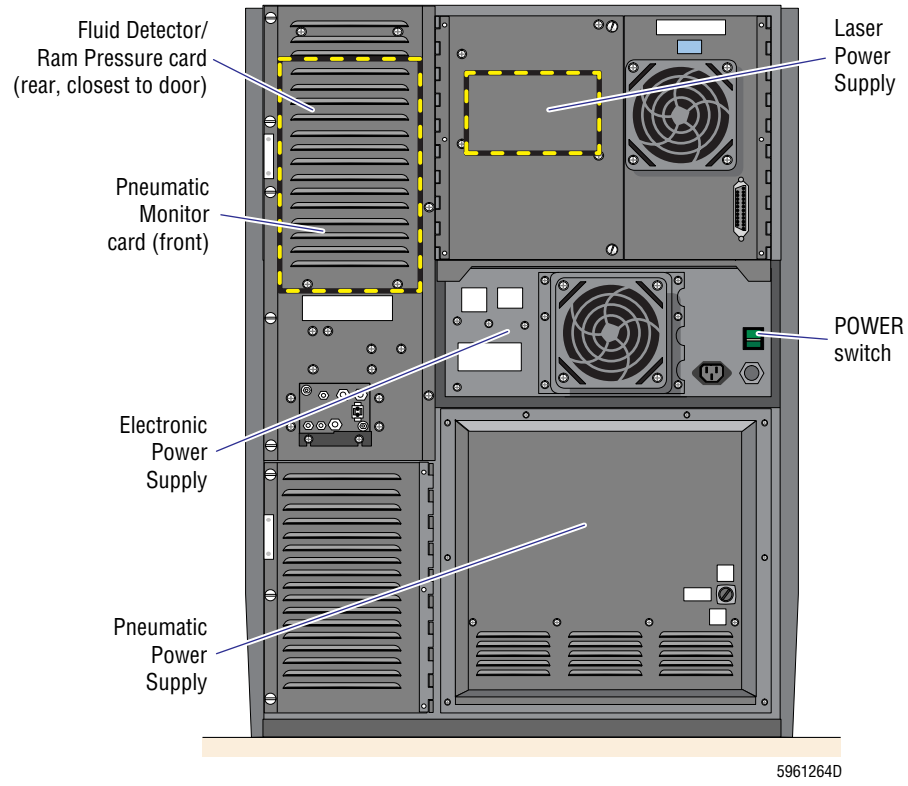

Figure 2.1-4 Main Unit Right-Side View, Main Component Locations

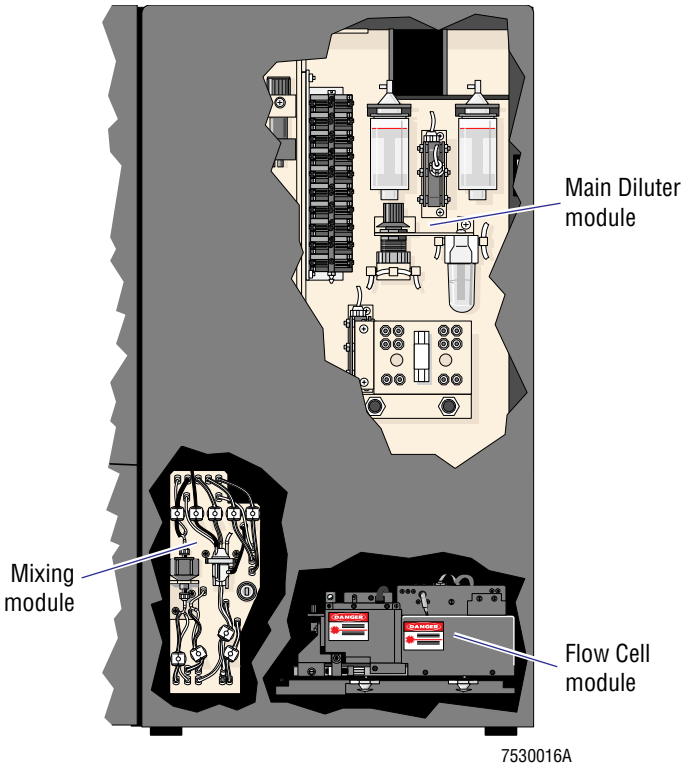

Figure 2.1-5 Main Unit Left-Side View, Main Component Locations

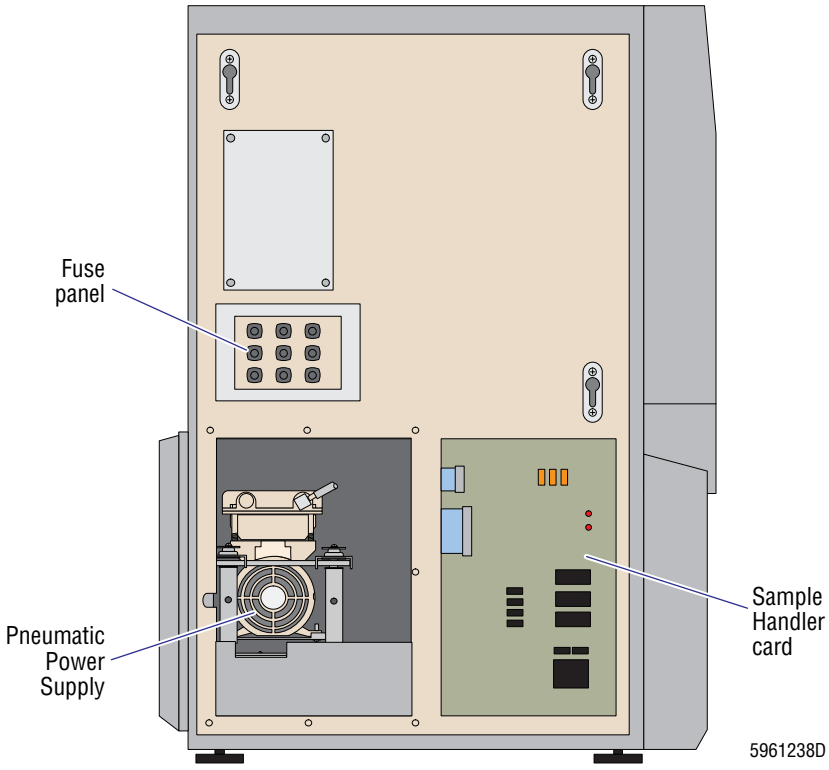

Systems

The HmX analyzer comprises several systems, each performing a specific function. This chapter includes a description of the following systems.

- Electronic (See Headings 2.2, 2.3, and 2.4.)
- Pneumatic (See Heading 2.5.)
- Reagent (See Heading 2.6.)
- Sample Handler (See Headings 2.7, 2.8, 2.9, and 2.10.)
- Sample Processing (See Heading 2.11.)
- Sample Analysis (See Headings 2.12 and 2.13.)

Physical Specifications

Refer to Chapter 4 of the customer's Reference manual for physical specifications and power requirements.

Performance Specifications and Characteristics

See Appendix A, TOLERANCES AND LIMITS, for the performance specifications needed to service the HmX analyzer. For any other performance specifications or performance characteristics (including interfering substances), refer to Chapter 4 of the customer's Reference manual.

Leakage Current Specifications

Coulter instruments are evaluated and approved to Underwriters Laboratories Standard 1262, Laboratory Equipment. Testing was performed by Electrical Testing Laboratories (ETL). Leakage current is tested per Section 6.7 - EXCEPTION:

> Equipment required to have primary circuit filtering to meet c (EMC) regulations may have a Leakage Current at accessible parts of more than 500 µA, but must not exceed 5.0 mA.

Coulter instruments such as the HmX analyzer and its peripherals incorporate primary circuit filtering to meet EMC requirements, therefore the exception in UL Standard 1262, Section 6.7 is applicable and allows a leakage current as high as 5.0 mA.

Computer systems, such as the DMS, and their peripherals are evaluated and approved to Underwriters Laboratories Standard 478, Information Processing and Business Equipment, prior to being approved for use with Coulter instruments. Leakage current is tested per Section 28 A, paragraph 28 A.3, EXCEPTION:

> A unit that requires electromagnetic interference filters or filtering capacitors or both for functional performance or to meet EMC regulations (for example FCC regulations) may have Leakage Current in excess of 500 µA but must not exceed 3.5 mA.

Computers and their peripherals used with the HmX analyzer employ EMC filtering devices as described in UL 478 Section 28 A, paragraph 28 A.3, EXCEPTION; therefore the maximum allowable leakage current is 3.5 mA Diagnostic Products

Refer to Chapter 4 of the customer's Reference manual for the diagnostics products used on the HmX analyzer.

Operation

Modes of Operation

In the Primary mode the HmX analyzer uses one of two options to introduce sample from a closed specimen tube into the system, a rotary cap-piercing mechanism (Rotary Cap-Pierce module) or a specimen transporting and cap-piercing mechanism (Autoloader module).

Instruments that have the Rotary Cap-Pierce module operate when the specimen tube is identified by a bar-code label. The label is read by presenting the specimen tube to a bar-code reader before the tube is placed in the cap-pierce carousel. Only one specimen tube can be placed in the cap-pierce carousel at a time.

Instruments that have the Autoloader module begin to function when a cassette containing specimen tubes is placed in the loading bay. The Autoloader module transports the cassette to the piercing station, where the specimen tube and cassette positions are identified by the bar-code reader. When the labels have been read, the specimen tube cap is pierced by the needle, and a sample is aspirated into the instrument.

In addition to the cap-piercing Primary mode, a Secondary mode is available for manually submitting single, open-vial samples. This mode is also used to analyze whole-blood samples prepared for reticulocyte analysis.

Operating Procedures

Refer to the customer's Operator's Guide for the operating procedures.

2.2 ELECTRONIC SYSTEM - OVERVIEW AND POWER SUPPLIES

Electronic System Overview

Input voltage is supplied to the Main Unit via the ac input cable on the rear of the Electronic Power Supply. Turning ON the **POWER** switch on the rear of the Electronic Power Supply routes the ac input voltage to the Electronic Power Supply.

In the Electronic Power Supply, the ac voltage is routed to the 5.6 V supply which provides power for battery protection, and to the K1 relay. If the Standby/Ready switch is on Standby (**0**), K1 is open, stopping flow. If the Standby/Ready switch is on Ready (**I**), K1 is closed and the ac voltage is routed through K1 to the remaining power supplies and to the peripheral outlet on the back of the Main Unit. For details, refer to the Power Supply Module schematic, DCN 6320500 or DCN 6320750, in Chapter 6, SCHEMATICS.

The power supplies convert the ac input voltage to dc voltages which are routed from the Electronic Power Supply, via connectors on the top of the Electronic Power Supply, to the TB (terminal board) on the rear of the Analyzer module. From the terminal board the voltages are distributed through the main wiring harness to the analog and digital backplanes in the card cage and to the Diluter modules. For details, refer to the lnterconnect Diagram MAXM/HmX Systems, DCN 6320619, in Chapter 6, SCHEMATICS.

Electronic Power Supply

The Electronic Power Supply (EPS) is a self-contained unit located below the Analyzer module in the Main Unit. See Figures 2.1-1, 2.1-2, and 2.1-3 for location.

Components

The Electronic Power Supply consists of the following (see Figures 2.2-1 and 2.2-2 for component locations):

- Five power supply modules:
  - PS3: ±15 Vdc and +5 Vdc
  - PS4: +24 Vdc
  - PS5: RF +6.3 Vdc and +300 Vdc
  - PS6: +12 Vdc
  - PS7: +5.6 Vdc.

  Note: All supply voltages are adjustable.
- Test points (J120) accessible at the front of the Electronic Power Supply for measuring the dc voltages.
- A switch for 120/220 V selection.
- Connectors for all voltage inputs and outputs.
- A compressor solid-state relay, K2, that connects the input ac voltage to the compressor.
- An ac line filter that filters the input ac voltage before going to the transformer.
- A cooling fan.

Function

The Electronic Power Supply converts the ac input voltage to the following dc voltages:

- +5 Vdc
- +5.6 Vdc
- +6.3 Vdc
- +12 Vdc
- ±15 Vdc
- +24 Vdc
- +240 Vdc
- +300 Vdc.

Figure 2.2-1 Electronic Power Supply, Front View

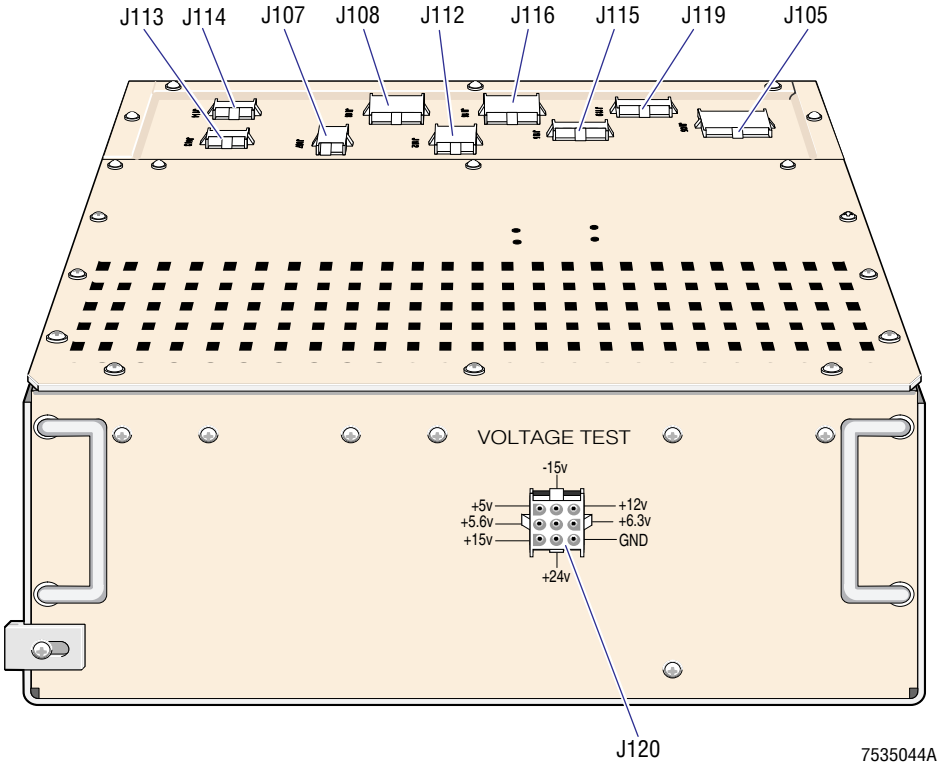

Figure 2.2-2 Electronic Power Supply Components, Top View, Cover Removed

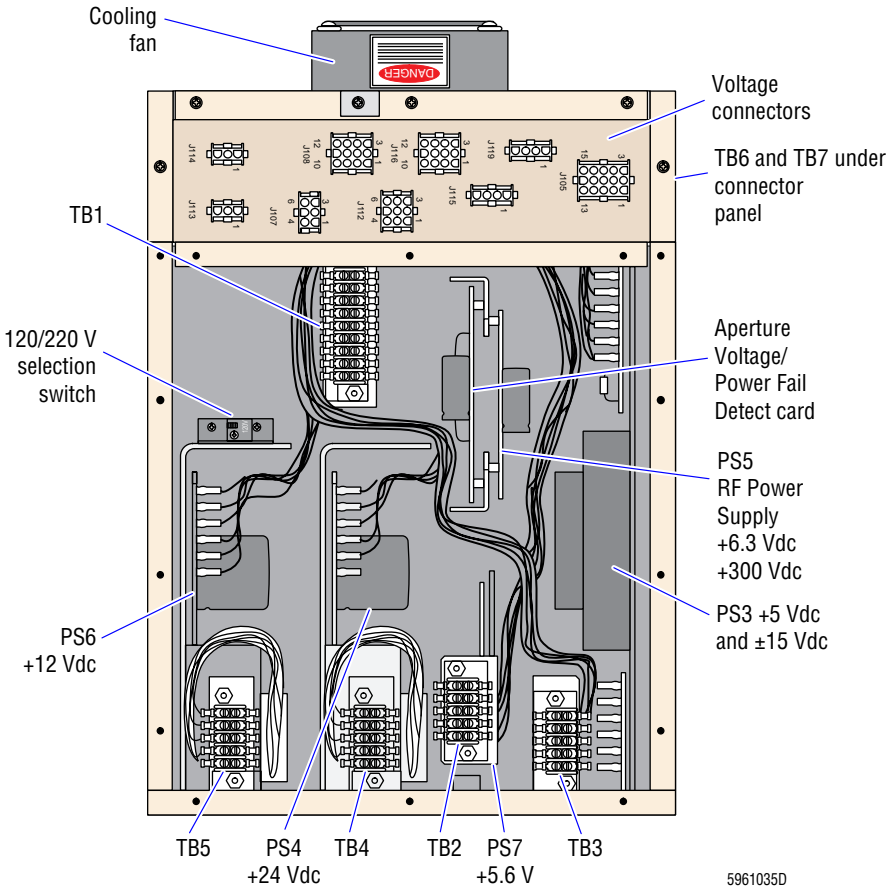

Color Coding

Throughout the HmX analyzer, the following wire colors are used for the Electronic Power Supply voltages:

- Black = ground

WARNING Risk of personal injury. The blue and brown wires are used for both ac and dc voltages and might carry high voltage. To avoid an electric shock:

- Use due care when working around any electronic components with the power ON.
- Power down completely before connecting or disconnecting electronic components.

- Blue = +12 Vdc (Blue is also used for the neutral line of the main ac wiring.)
- Brown = +24 Vdc (Brown is also used for the hot line of the main ac wiring.)
- Green = -15 Vdc
- Orange = +15 Vdc
- White = +5.6 Vdc
- Yellow = +5 Vdc

Connectors

The power from the Electronic Power Supply is distributed to the rest of the Main Unit through connectors on the top of the Electronic Power Supply (Figure 2.2-1). The voltages supplied at each connector are listed in Heading A.3-4, Electronic Power Supply Test Points and Adjustments.

Specifications

For the required operating temperature range and the storage temperature and range, refer to Chapter 4 of the customer's Reference manual.

Voltage Configurations

Refer to Table A.3-3, Electronic Power Supply Terminal Card Jumpers and Connections.

Fuses

Refer to Figure 2.1-5 for the location of the fuse panel on the Electronic Power Supply. The fuse ratings and functions are listed in Table A.3-2, Fuse Ratings and Functions.

Laser Power Supply

The Laser Power Supply is mounted on the right rear door of the instrument (left/right orientation from the front of the instrument). See Figure 2.1-3 for location.

Function

The Laser Power Supply has an input of 100/115/230 Vac (from the Electronic Power Supply) and supplies high voltage (1350 Vdc) to operate the laser. Refer to Table A.3-5, Laser Power Supply Buck-Boost Transformer Jumpers and Connections, for voltage configurations.

RF Power Supply

Components

The RF power supply, located inside the Electronic Power Supply housing (Figure 2.2-2), consists of:

- The RF transformer, an assembly with two transformers, RF and aperture current
- The RF Power Supply card.

Function

The RF transformer converts the main ac input voltage to 150 Vac. The 150 Vac is then sent to the RF Power Supply card where it produces 300 Vdc for the RF Detector Preamp card, if the RF SUPPLY ON signal is low (active low).

The filament voltage (6.3 Vdc) for the vacuum tube in the RF Detector Preamp card is also produced by the RF Power Supply card. The input voltage of +24 Vdc from the +24 Vdc power supply is converted to an output of 6.3 Vdc.

Voltage Monitoring

The I/O card monitors all system voltages including the Laser Power Supply and RBC and WBC aperture voltages.

2.3 ELECTRONIC SYSTEM - SIGNAL FLOW BLOCK DIAGRAMS

Figure 2.3-1 illustrates the electronic signal flow for the HmX analyzer with Rotary Cap-Pierce module, Figure 2.3-2 for the HmX analyzer with Autoloader module. Shading in a block indicates the circuit card is on the data bus.

Figure 2.3-1 Signal Flow Block Diagram (HmX Analyzer with Rotary Cap-Pierce Module)

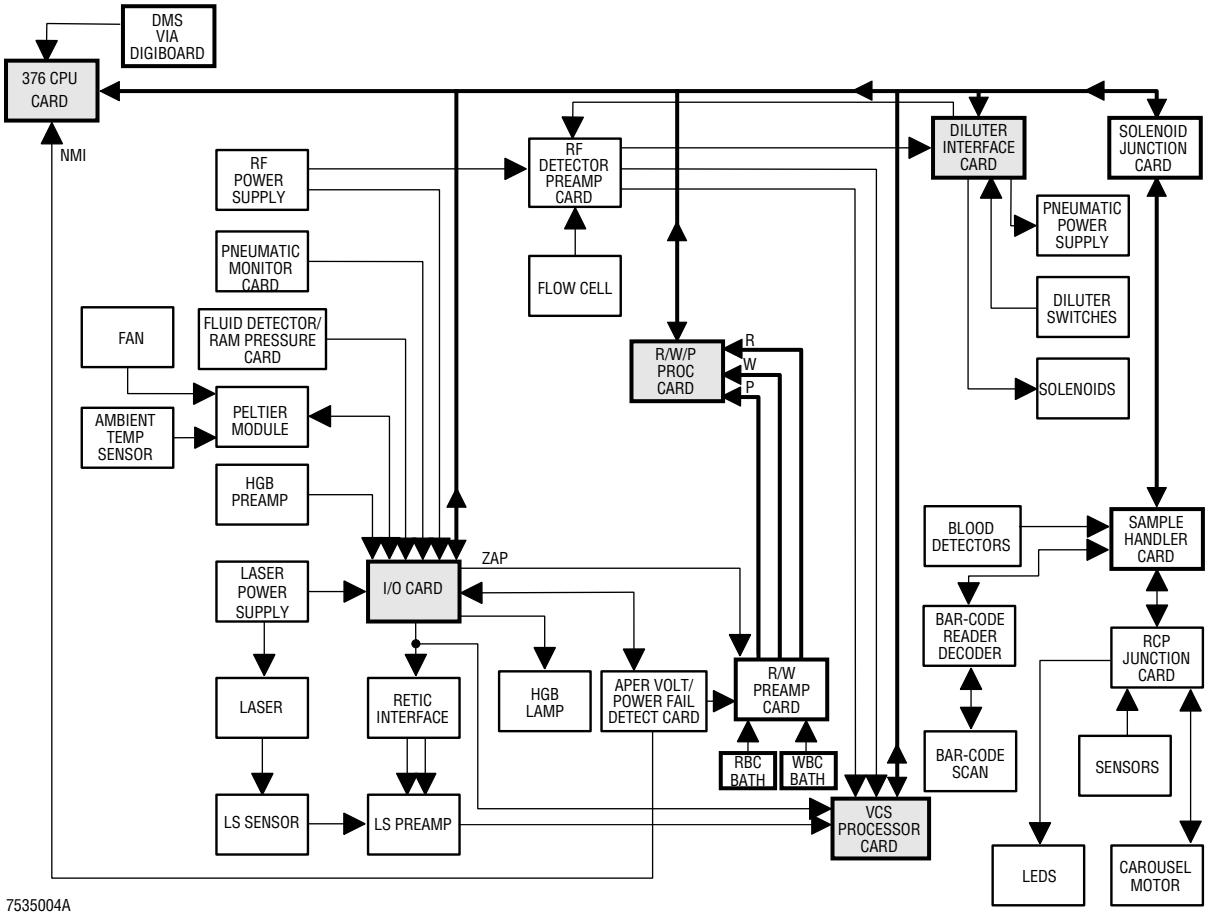

Figure 2.3-2 Signal Flow Block Diagram (HmX Analyzer with Autoloader Module)

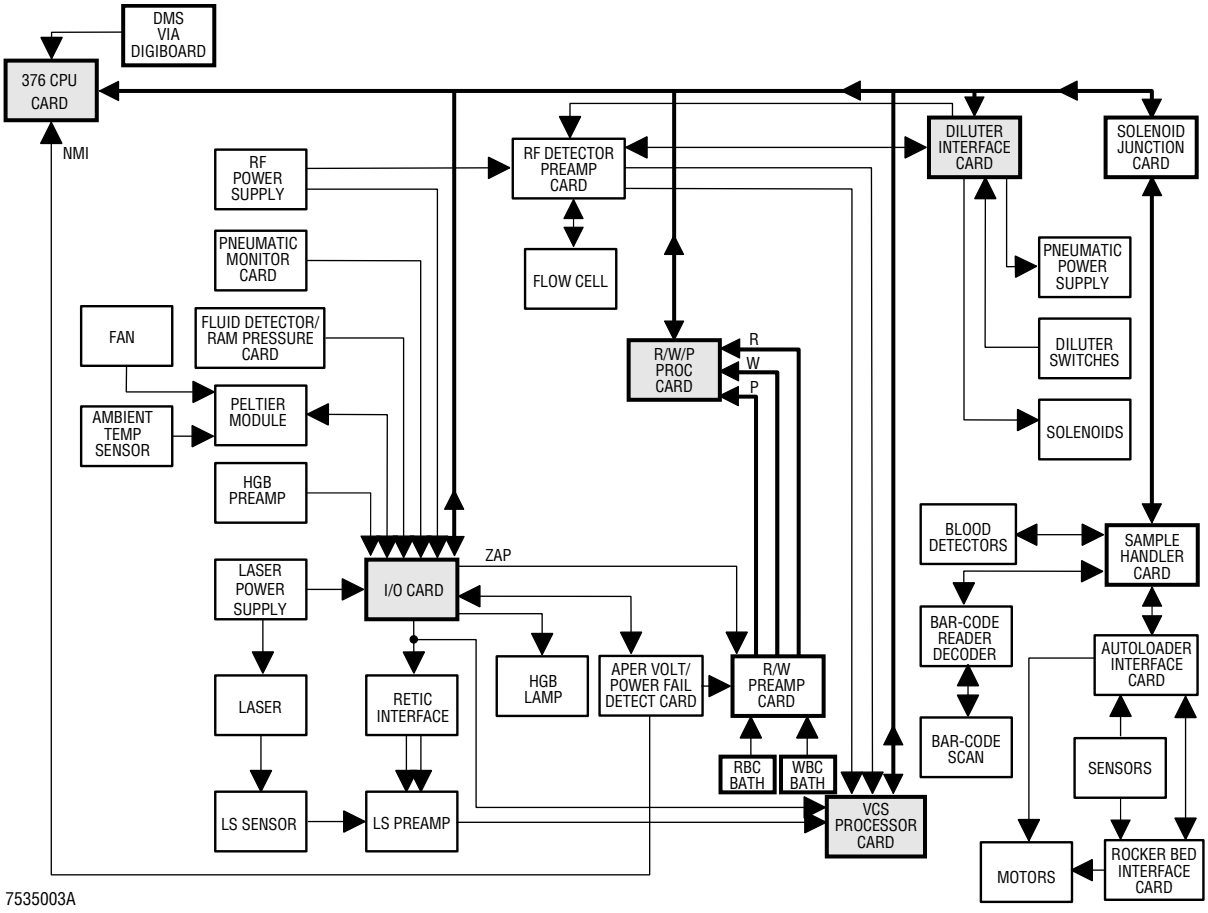

For details on the components included in Figures 2.3-1 and 2.3-2, refer to the following headings or tables.

For information on…	See…
376 CPU card	376 CPU Card under Heading 2.4, ELECTRONIC SYSTEM - ANALYZER MODULE
Autoloader Interface card	Autoloader Interface Card under 2.9, SAMPLE HANDLER SYSTEM - AUTOLOADER MODULE
Blood detectors	Main Components, Blood/Bubble Detectors, under Heading 2.11, SAMPLE PROCESSING SYSTEM - DILUTER
DILUTER INTERFACE card	DILUTER INTERFACE Card under Heading 2.4, ELECTRONIC SYSTEM - ANALYZER MODULE
Fluid Detector/Ram Pressure card	Fluid Detector/Ram Pressure Card under Heading 2.6, REAGENT SYSTEM
I/O card	I/O Card under Heading 2.4, ELECTRONIC SYSTEM - ANALYZER MODULE
Laser Power Supply	Laser Power Supply under Heading 2.2, ELECTRONIC SYSTEM - OVERVIEW AND POWER SUPPLIES
LS Preamp module	LS Preamp 5 Module under Heading 2.13, SAMPLE ANALYSIS SYSTEM - VCS TECHNOLOGY

For information on…	See…
Peltier module	Reagent Temperature Control, Peltier Module Description, under Heading 2.6, REAGENT SYSTEM
Pneumatic Monitor card	Pneumatic Monitor Card under Heading 2.5, PNEUMATIC SYSTEM
Pneumatic Power Supply	Pneumatic Power Supply under Heading 2.5, PNEUMATIC SYSTEM
R/W PREAMP card	R/W PREAMP Card under Heading 2.4, ELECTRONIC SYSTEM - ANALYZER MODULE
R/W/P PROC card	R/W/P PROC Card under Heading 2.4, ELECTRONIC SYSTEM - ANALYZER MODULE
RCP Junction card	RCP Junction Card under Heading 2.8, SAMPLE HANDLER SYSTEM - ROTARY CAP-PIERCE MODULE
RF Detector Preamp card	RF Detector Preamp Card under Heading 2.13, SAMPLE ANALYSIS SYSTEM - VCS TECHNOLOGY
RF Power Supply	RF Power Supply under Heading 2.2, ELECTRONIC SYSTEM - OVERVIEW AND POWER SUPPLIES
Rocker Bed Interface card	Rocker Bed Interface Card under 2.9, SAMPLE HANDLER SYSTEM - AUTOLOADER MODULE
Sample Handler card	Heading 2.7, SAMPLE HANDLER SYSTEM - SAMPLE HANDLER CARD
Sensors	Table 4.43-2, Switch/Sensor Checks on the HmX Analyzer with Rotary Cap-Pierce Module, or Table 4.43-1, Switch/Sensor Checks on the HmX Analyzer with Autoloader Module
Solenoids	Table 4.26-1, Solenoid Operations
VCS PROCESSOR card	VCS PROCESSOR Card under Heading 2.4, ELECTRONIC SYSTEM - ANALYZER MODULE

2.4 ELECTRONIC SYSTEM - ANALYZER MODULE

Function

The Analyzer module controls the timing and sequencing of the operating cycles, receives and analyzes the CBC and VCS pulses and raw data from the Diluter (counts, measures and computes parameters), and sends the information to the DMS.

Note: While the components in the Analyzer module could be divided and discussed separately as parts of the Electronic System, System Control, and the Sample Analysis system, for convenience they are discussed here as a group under the Electronic System.

Description

The Analyzer module is located above the Electronic Power Supply in the Main Unit. See Figure 2.1-1 or Figure 2.1-2 for location. The Analyzer module comprises an EMC shield, a card cage, and six circuit cards inserted into the card cage (Figure 2.4-1).

The card cage includes the Digital backplane, the Analog backplane, and the Solenoid Junction card, which provide the signal and power interfacing for the Analyzer module's circuit cards.

CAUTION Inserting a circuit card in the wrong slot in the card cage could damage the instrument. Use caution when inserting cards.

Figure 2.4-1 Circuit Card Locations in the Card Cage

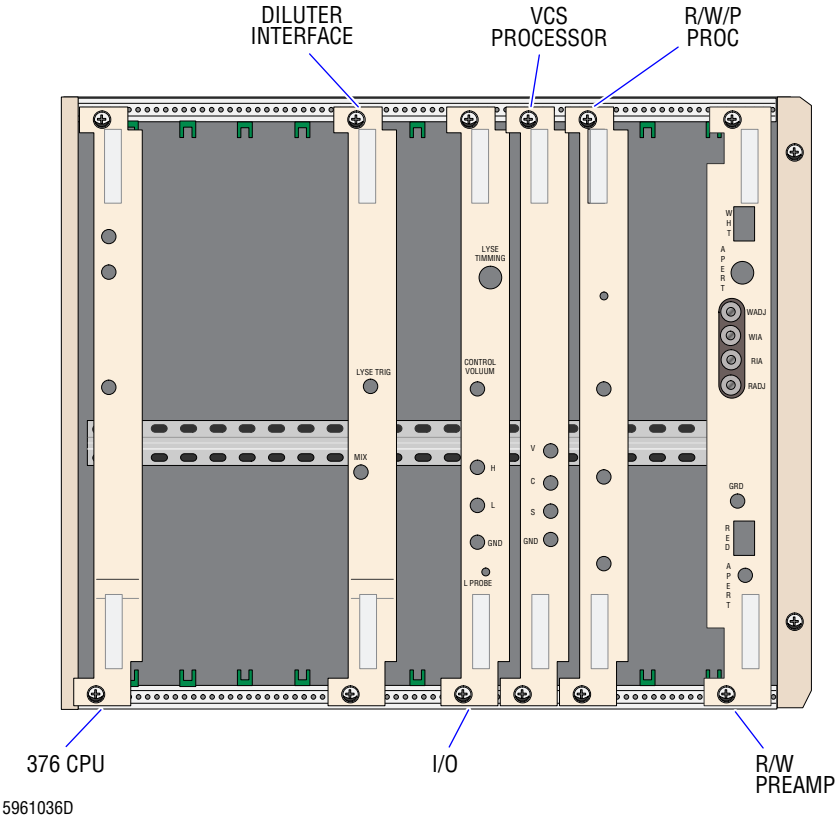

5961036D

The circuit cards inserted into the Analyzer module's card cage are (Figure 2.4-1):

- 376 CPU (slot 2)
- DILUTER INTERFACE (slot 22)
- I/O (slot 32)
- VCS PROCESSOR (slot 37)
- R/W/P PROC (slot 42)
- R/W PREAMP (slot 54).

376 CPU Card

Refer to Figure 2.4-1 for the location of the 376 CPU card in the Analyzer card cage.

Description

The 376 CPU card has an 80376 CPU running at 16 MHz, with a 80387 math coprocessor. It has a 1-MB EPROM, used as a boot PROM, and 1.3 MB of RAM. The 1.3 MB of RAM is protected by a lithium battery that must have a value of approximately 3.6 V. Any value below 3.55 V indicates a weak battery.

The card uses an 82370 controller that controls the DMA (Direct Memory Access), Interrupts, and System Timers.

Software Download Sequence

Download occurs between the DMS and the 376 CPU card. The status of the instrument's onboard RAM depends on the software that is loaded.

On the initial download, once the DMS has completed its boot sequence, the download (Figure 2.4-2) begins in this order:

1. The DMS sends the instrument code to the 376 CPU card.
2. The DMS sends the instrument configuration to the 376 CPU card.
3. The DMS sends the Sample Handler code to the 376 CPU card.
4. The DMS sends the diluter tables to the 376 CPU card. At the same time, the 376 CPU card sends the Sample Handler code to the Sample Handler card.
5. The DMS sends the Sample Handler configuration to the 376 CPU card.

Figure 2.4-2 Initial DMS to Instrument Download

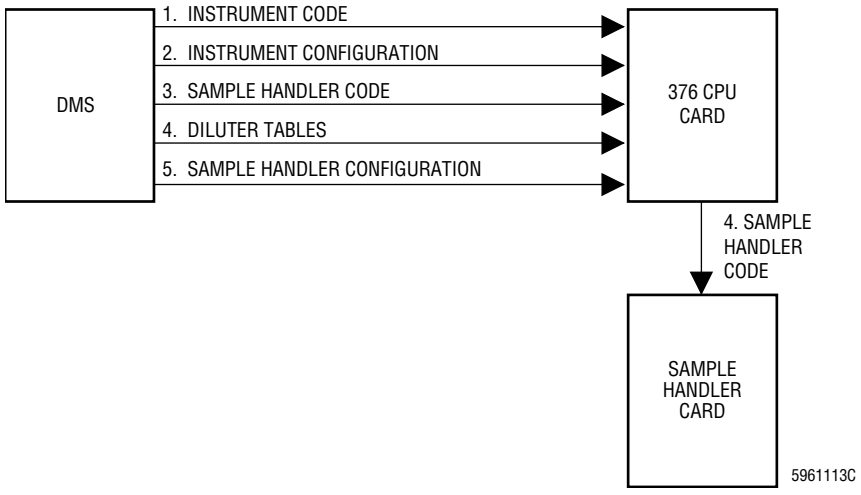

On subsequent reboots, once the DMS has completed its boot sequence, the download (Figure 2.4-3) begins in this order:

1. The DMS sends the instrument configuration to the 376 CPU card.
2. The DMS sends the Sample Handler configuration to the 376 CPU card.

3. Since the Sample Handler code has been previously downloaded to the 376 CPU card and stored in RAM, the 376 CPU card sends the Sample Handler code to the Sample Handler card while the DMS is booting.

Figure 2.4-3 Subsequent DMS to Instrument Download

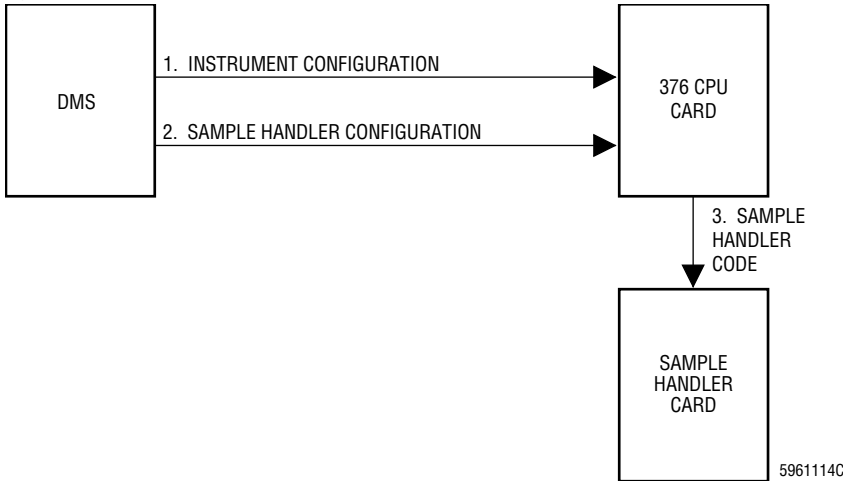

Jumpers for the 376 CPU Card

The 376 CPU card has 22 jumper locations. See Figure A.2-1 and Table A.2-1 for the correct jumper configuration.

376 CPU Card Inputs/Outputs

Inputs:

- Electronic Power Supply
- Digiboard in the DMS
- Aperture Voltage/Power Fail Detect card in the Electronic Power Supply
- I/O card
- R/W/P PROC card
- VCS PROCESSOR card
- DILUTER INTERFACE card
- Solenoid Junction card
- Sample Handler card via the Solenoid Junction card

Outputs:

- Digiboard in the DMS
- I/O card
- R/W/P PROC card
- VCS PROCESSOR card
- DILUTER INTERFACE card
- Solenoid Junction card
- Sample Handler card via the Solenoid Junction card

RAM Timer Card

The RAM Timer card contains additional RAM memory for the 376 CPU card. The RAM Timer card sits on top of the 376 CPU card and is connected to it. Refer to Figure A.2-8.

Jumpers for the RAM Timer Card

The RAM Timer card has two jumper locations. See Figure A.2-8 for the correct jumper configuration.

DILUTER INTERFACE Card

Refer to Figure 2.4-1 for the location of the DILUTER INTERFACE card in the Analyzer card cage.

Function

Refer to the block diagram, Figure 2.4-4, as you read this section. Shading in a block indicates the circuit card is on the data bus.

The DILUTER INTERFACE card controls:

- The 300 Vac to the RF Detector Preamp card.
- The COMPRESSOR ON signal to the Electronic Power Supply (which turns on the Pneumatic Power Supply).
- The 72 solenoids through the Solenoid Junction card.
- The mix motor.

The DILUTER INTERFACE card monitors the FLOW DETECT, RF DETECT, and CLOG DETECT signals from the RF Detector Preamp card.

Lyse Trigger Test Point

The test point used for triggering when performing diluent and lytic reagent timing, TP26, is located on the front of the DILUTER INTERFACE card and is labeled LYSE TRIG. Refer to Figure A.2-3.

Jumper

The DILUTER INTERFACE card has one jumper location. See Figure A.2-3 for the correct jumper configuration.

DILUTER INTERFACE Card Inputs/Outputs

Inputs:

- Electronic Power Supply
- 376 CPU card
- Solenoid Junction card
- RF Detector Preamp card
- Diluter switches

Outputs:

- 376 CPU card
- Solenoid Junction card
- Pneumatic Power Supply
- Solenoids
- RF Detector Preamp card

Troubleshooting tip: DILUTER INTERFACE Card Inputs/Outputs lists the direct inputs and outputs for the card. Be aware however, that any defective circuit card on the Digital backplane could affect the operation of the DILUTER INTERFACE card.

Figure 2.4-4 DIILUTER INTERFACE Card and Solenoid Junction Card Block Diagram

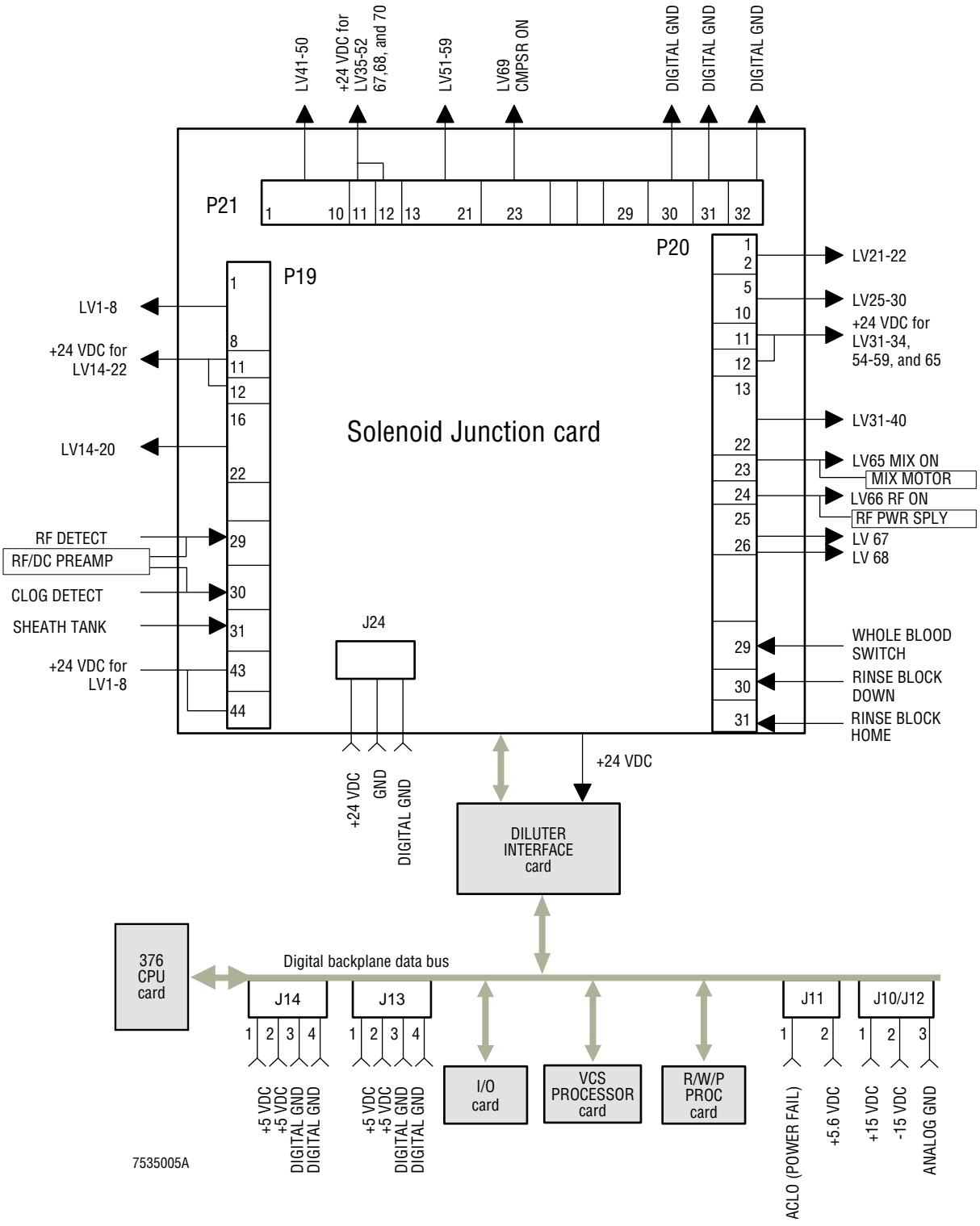

I/O Card

Refer to Figure 2.4-1 for the location of the I/O card in the Analyzer card cage.

Function

Refer to the block diagram, Figure 2.4-5, as you read this section. Shading in a block indicates the circuit card is on the data bus.

Figure 2.4-5 I/O Card Block Diagram

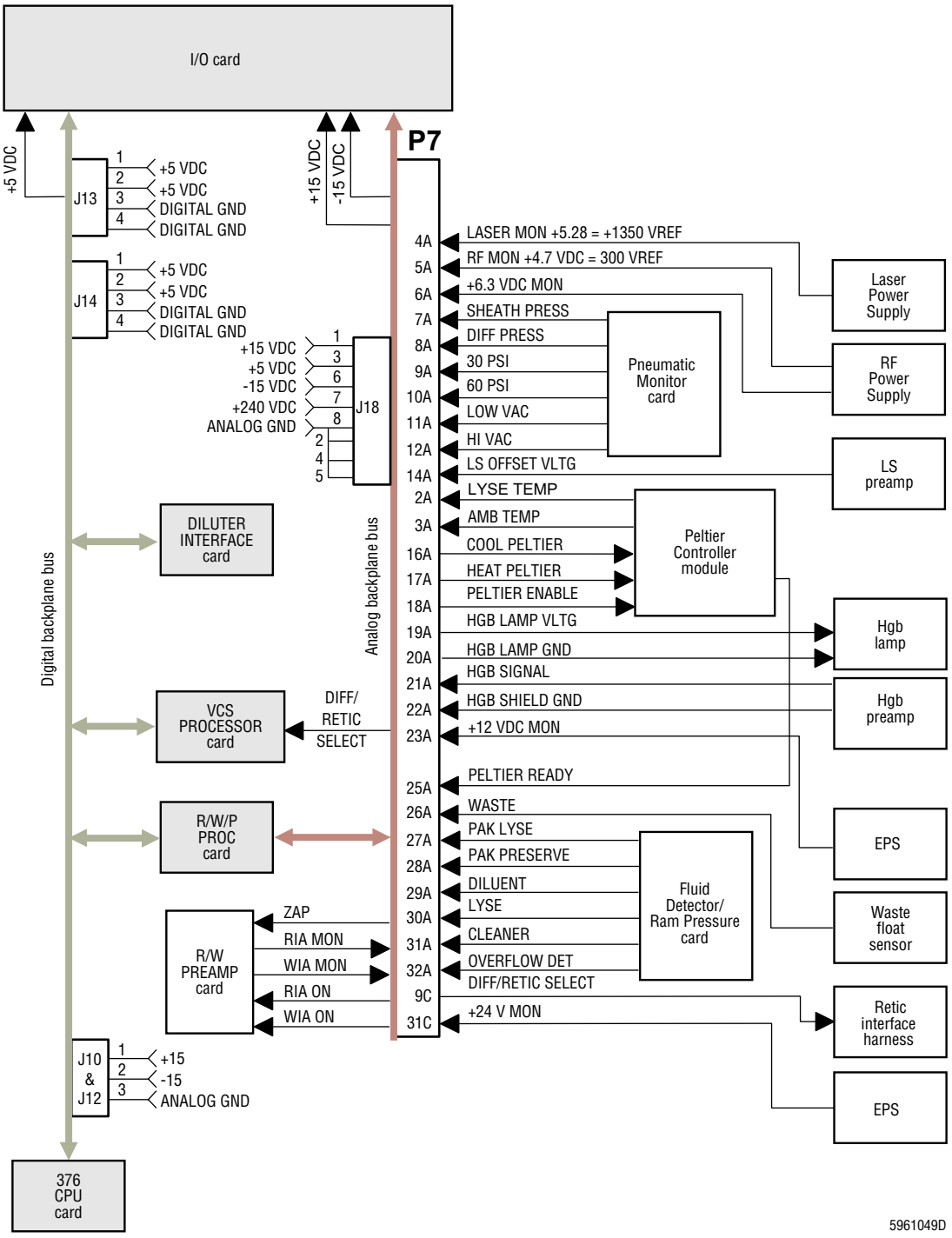

The I/O card monitors and measures the following system status conditions and converts the analog inputs to digital signals for use by the 376 CPU card:

- The system pressures and vacuums -
  - 30 psi, 60 psi, sheath, and diff (sample) pressures
  - High and low vacuums
- The optical reagent level sensors, waste sensor, and CBC overflow sensors
- The LS offset voltage
- The ambient temperature and the reagent temperature in the Peltier module's ceramic reagent manifold
- All system voltages including the Laser Power Supply, the RBC and WBC aperture, the Hgb blank, and the Hgb sample voltages

The I/O card controls:

- Diff/Retic select
- Red and White aperture current control
- ZAP command
- Peltier module temperature using the AUTO, COOL, and HEAT signals

In addition, the I/O card houses the DAC (digital to analog converter) for the Hgb regulator. The 376 CPU card controls the Hgb lamp through the I/O card.

Jumpers

The I/O card has two jumper locations. See Figure A.2-5 for the correct jumper configuration.

I/O Card Inputs/Outputs

Inputs:

- Voltage from Electronic Power Supply
- 376 CPU card
- R/W PREAMP card
- Laser Power Supply
- RF Power Supply
- Pneumatic Monitor card
- Peltier module
- Light scatter preamp
- Hgb preamp
- Waste float sensor
- Fluid Detector/Ram Pressure card

Outputs:

- 376 CPU card
- VCS PROCESSOR card
- R/W PREAMP card
- Hgb lamp
- Peltier module
- Retic interface harness

Troubleshooting tip: I/O Card Inputs/Outputs lists the direct inputs and outputs for the card. Be aware however, that any defective circuit card on the Digital backplane could affect the operation of the I/O card.

VCS PROCESSOR Card

Refer to Figure 2.4-1 for the location of the VCS PROCESSOR card in the Analyzer card cage.

Function

Refer to the block diagram, Figure 2.4-6, as you read this section. Shading in a block indicates the circuit card is on the data bus.

Figure 2.4-6 VCS PROCESSOR Card Block Diagram

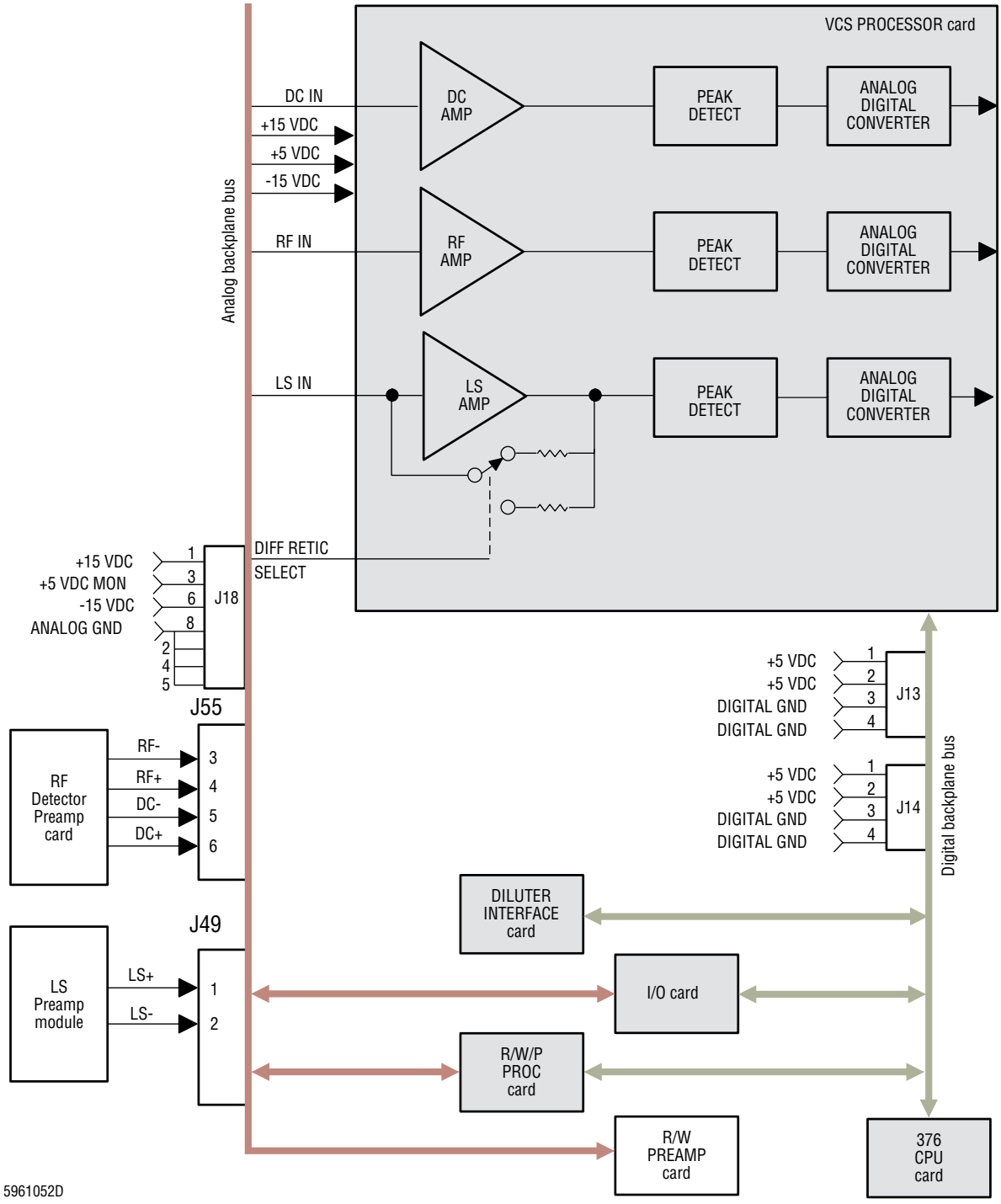

The VCS PROCESSOR card is interfaced to the backplane via control, address, and data signals to and from the 376 CPU card.

The LS Preamp module and RF Detector Preamp card pass pulses to the VCS PROCESSOR card, which further amplifies the signals with three separate amplifiers: one each for volume and conductivity, and one for scatter (Diff or Retic). Only one scatter gain is in use at a time, depending on whether Diff or Retic is selected. Three independent A/D converters convert the peak pulses to a 12-bit value which is sent to the 376 CPU card via direct memory access (DMA).

Noise Levels

Three test points on the front of the VCS PROCESSOR card (Figure A.2-12) allow measurement of the electronic noise levels on the V, C, and S channels. Refer to Diff and Retic RMS Noise Checks under Heading 4.12, RMS NOISE CHECKS, for the procedure.

Jumper

The VCS PROCESSOR card has one jumper location. See Figure A.2-12 for the correct jumper configuration.

VCS PROCESSOR Card Inputs/Outputs

Inputs:

- Electronic Power Supply
- 376 CPU card
- I/O card
- LS Preamp module
- RF Detector Preamp card

Outputs:

- 376 CPU card
- V, C, S test points on the front of the card

Troubleshooting tip: VCS PROCESSOR Card Inputs/Outputs lists the direct inputs and outputs for the card. Be aware however, that any defective circuit card on the Digital backplane could affect the operation of the VCS PROCESSOR card.

R/W/P PROC Card

Refer to Figure 2.4-1 for the location of the R/W/P PROC card in the Analyzer card cage.

Function

Refer to the block diagram, Figure 2.4-7, as you read this section. Shading in a block indicates the circuit card is on the data bus.

The R/W/P PROC card contains circuitry both for counting RBCs and WBCs, and for developing the RBC, WBC, and Plt histograms. While these circuits are contained on the same circuit card and are used simultaneously, they function independently of each other.

RBC and WBC Counting Sequences

The R/W/P PROC card receives amplified RBC, WBC, and Plt pulses from the R/W (Red/White) PREAMP card; see Figure 2.4-7. The counting circuits count RBC and WBC particle pulses for 12 seconds, consisting of three 4-second count periods (Count Periods 1, 2, and 3).

The results from each count period are transferred via the data bus to the 376 CPU card where they are coincidence-corrected, voted on, averaged, and multiplied by a calibration factor.

RBC and WBC Voting Criteria

The voting criteria for both the RBC and WBC parameters are:

- If the Hgb value is $\geq$1.0 g/dL, and if the result obtained from Count Period 1 is "voted out," then the final parameter result is "-----," which indicates a total voteout of the result. Similarly, if there is a total voteout of the three count periods (complete disagreement among all count period results), then the final parameter result is "-----."
- The counts from at least two of the three count periods must agree to obtain a final result (according to the above criteria).
- If the count from either count period 2 or 3 votes out, then the final parameter result represents the average of the two remaining count periods.
- If a parameter value results from the average of only two count periods, then the result is flagged with a "*V."

WBC, RBC and Plt Histogram Development

The HmX analyzer develops the WBC, RBC, and Plt histograms separately from the WBC and RBC counts, using the R/W PREAMP, the R/W/P PROC, and the 376 CPU cards.

- The R/W PREAMP card amplifies the WBC, RBC, and Plt particle pulses and outputs them to the R/W/P PROC card.
- The R/W/P PROC card edits the WBC, RBC and Plt pulses based on an acceptable pulse height and width criteria (pulse editing). The R/W/P PROC converts the edited analog pulses to a digital address (analog-to-digital conversion), then transfers the digital data to the 376 CPU card via the Digital backplane (data bus).
- The 376 CPU card stores the transferred digital data, formulates the WBC, RBC, and Plt histograms, and provides histogram analysis necessary to determine the MCV, RDW, Plt, MPV, and PDW parameters.

  The DMS determines the percentages of the LY, MO, NE, BA and EO populations, and calculates the absolute numbers of these populations.

Data Transfer Method for Histogram Development

For troubleshooting purposes, it is important to note that the particle pulse accumulation method for the WBC, RBC, and Plt histograms does not follow the same 1, 2, and 3 Count Period sequence as the WBC and RBC "count."

Figure 2.4-7 R/W/P PROC Card and R/W PREAMP Card Block Diagram

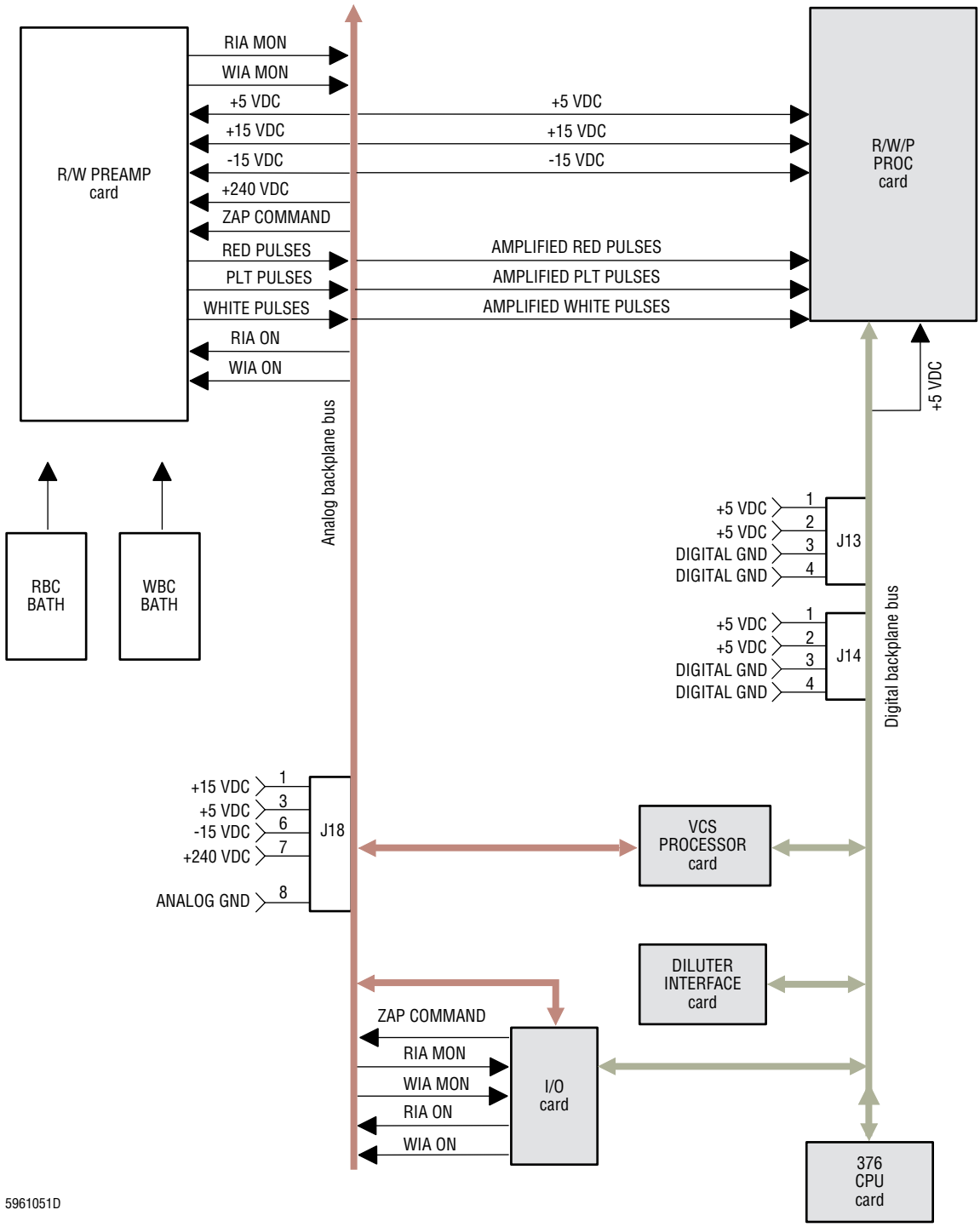

For example, the RBC particle pulses accumulated during Count Period 1 (4 seconds) are not used to exclusively formulate the corresponding RBC Histogram 1; similarly, the pulses accumulated during Count Periods 2 or 3 are not used exclusively to formulate RBC Histogram 2 or 3.

Instead, the HmX analyzer uses a unique method of transferring particle pulse data to form each parameter's histogram. The method is as follows:

T	=	1	2	3	4	5	6	7	8	9	10	11	12✓
H	=	1	2	3	1	2	3	1	2	3	1	2	3

where

T = Number of seconds within the standard accumulation period (1st second, 2d second, and so forth)

H = Number of the corresponding histogram into which the accumulated data is transferred.

The system always accumulates particle pulses for histogram development for a minimum of 12 seconds as illustrated above. However, additional accumulation time may be required to meet the following criteria:

- Each WBC histogram must accumulate a minimum of 2,000 pulses per histogram, or must have completely filled at least one channel within each 256-channel histogram.
- Each RBC histogram must accumulate a minimum of 5,000 pulses per histogram, or must have completely filled at least one channel within each 256-channel histogram.
- Any Plt histogram accumulates a minimum of 800 pulses.

At the end of the initial 12-second accumulation time, if the above criteria are not met for any given histogram, the HmX analyzer proceeds into an extended accumulation phase:

T	=	13	14	15✓	16	17	18✓	19	20	21✓	22	23	24✓✓
H	=	1	2	3	1	2	3	1	2	3	1	2	3

where

T = Number of seconds within the extended accumulation time frame (13th second, 14th second, and so forth).

H = Number of the corresponding histogram into which the accumulated data is transferred (WBC, RBC, and Plt histograms 1, 2, and 3).

✓ = Point at which the CPU checks to determine if the accumulation criteria have been met. If the criteria are met, the extended accumulation sequence stops.

✓✓ = Marks the maximum accumulation time allowed for the WBC histogram. The WBC aperture current is turned off, and vacuum is no longer applied to the WBC aperture.

If the RBC or Plt histogram accumulation criteria are not satisfied after 24 seconds, the system continues the extended accumulation phase:

T	=	25	26	27✓	28	29	30✓	31	32	33✓	34	35	36✓✓
H	=	1	2	3	1	2	3	1	2	3	1	2	3

where

T	=	Number of seconds within the extended accumulation time frame (25th second, 26th second, and so forth).
H	=	Number of the corresponding histogram into which the accumulated data is transferred (RBC and Plt histograms 1, 2, and 3).
✓	=	Point at which the CPU checks to see if the accumulation criteria have been met. If the criteria are met, then the extended accumulation sequence stops.
✓✓	=	Marks the maximum accumulation time allowed for the RBC and Plt histograms. The RBC aperture current is turned off, and the vacuum is no longer applied to the RBC aperture. Accumulation stops.

Voting Criteria for Histogram-Derived Parameters

The voting criteria for histogram-derived parameters, MCV, RDW, Plt, and MPV are similar to the voting criteria for the RBC and WBC. The only exception is if the result obtained from the corresponding histogram 1 votes out. Then the final result reflects the average of the remaining two histogram results (no "-----" due to histogram 1 result vote out).

Noise Levels

Three test points and a ground on the front of the R/W/P PROC card (Figure A.2-10) allow measurement of the electronic noise levels (RMS) on the RBC, WBC and Plt channels. Refer to CBC RMS Noise Checks under Heading 4.12, RMS NOISE CHECKS, for the procedure.

The noise limits are specified in Electronic Noise Limits under Heading A.1, TOLERANCES AND LIMITS.

Jumpers

The R/W/P PROC card has eleven jumper locations. See Figure A.2-10 for the correct jumper configuration.

R/W/P PROC Card Inputs/Outputs

Inputs:

- Electronic Power Supply
- R/W PREAMP card
- 376 CPU card

Outputs:

- 376 CPU card
- RED, WHT and PLT test points on the front of the card

Troubleshooting tip: R/W/P PROC Card Inputs/Outputs lists the direct inputs and outputs for the card. Be aware however, that any defective circuit card on the Digital backplane could affect the operation of the R/W/P PROC card.

R/W PREAMP Card

Refer to Figure 2.4-1 for the location of the R/W PREAMP card in the Analyzer card cage.

Function

Refer to the block diagram, Figure 2.4-7, as you read this section. Shading in a block indicates the circuit card is on the data bus.

The R/W PREAMP card contains:

- The aperture current regulators.
- The burn circuitry (zap) for the apertures. The I/O card issues the ZAP COMMAND to the R/W PREAMP card.

The R/W PREAMP card supplies the aperture current to the RBC and WBC baths. The RBC, WBC, and Plt pulses are fed through the R/W PREAMP card where they are amplified to an acceptable level to be processed by the R/W/P PROC card

R/W PREAMP Card Inputs/Outputs

Inputs:

- Electronic Power Supply
- Aperture Voltage/Power Fail Detect card
- RBC bath
- WBC bath
- I/O card

Outputs:

- R/W/P PROC card

2.5 PNEUMATIC SYSTEM

The pneumatic system develops, monitors, and distributes the pressures and vacuums needed to operate the system.

Pneumatic Power Supply

The Pneumatic Power Supply is a self-contained unit located at the bottom of the Main Unit and accessible from both the rear (Figure 2.1-3) and the left side (Figure 2.1-5) of the Main Unit.

Components

The Pneumatic Power Supply includes (see Figure 2.5-1 for component locations):

- A dual-head air compressor/vacuum pump driven by a single electric motor.
- A cooling fan that draws air over a condensing coil and away from the pump.
- An adjustable, 60 psi, pressure relief valve.

Figure 2.5-1 Pneumatic Power Supply Components, Left-Side View, Compressor Sub-Panel Removed

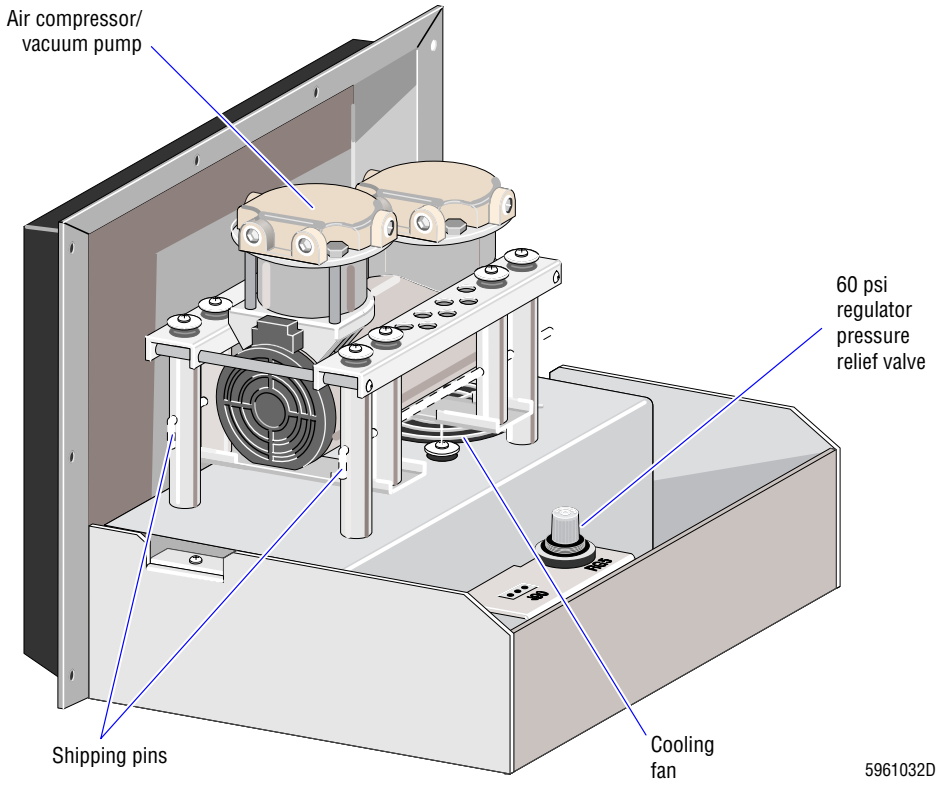

Function

The compressor/vacuum pump produces one adjustable level of air pressure, 60 psi, and one nonadjustable level of vacuum, >22 in. of Hg. (The exact level of vacuum varies with altitude.) The 60-psi air pressure and the vacuum are supplied to the system modules for operation of the pneumatic and hydraulic components.

Voltage Configurations

The Pneumatic Power Supply has a buck-boost transformer installed in series with the ac input line. This transformer is used to adjust the ac input voltage to the optimum voltage required by the Pneumatic Power Supply. See Table A.3-6, Pneumatic Power Supply Buck-Boost Transformer Terminal Card Jumpers and Connections, for instructions on configuring the buck-boost transformer wiring.

Fuse

The Pneumatic Power Supply has one fuse, located on the rear of Pneumatic Power Supply. The fuse rating and function is listed in Table A.3-2, Fuse Ratings and Functions.

Pressure and Vacuum Distribution

For distribution details, refer to the Pneumatic/Hydraulic Layout, DCN 6320510, in Chapter 6.

60-psi Pressure Distribution

Unregulated pressure from the compressor/vacuum pump is routed to a pressure-relief valve in the Pneumatic Power Supply (Figure 2.5-1), which regulates the pressure to 60 psi. From the pressure relief valve, the 60-psi pressure is routed through a water trap to an air tank (Figure 2.5-2), which maintains the 60-psi pressure at an acceptable level during peak loads. From the air tank the 60-psi pressure is routed to:

- The Pneumatic Monitor card for monitoring.
- The 30-psi regulator, RG2, for regulation to 30 psi.
- LV43 for dispensing any condensation collected in the water trap to waste.

Figure 2.5-2 Pressure and Vacuum Air Tank Locations

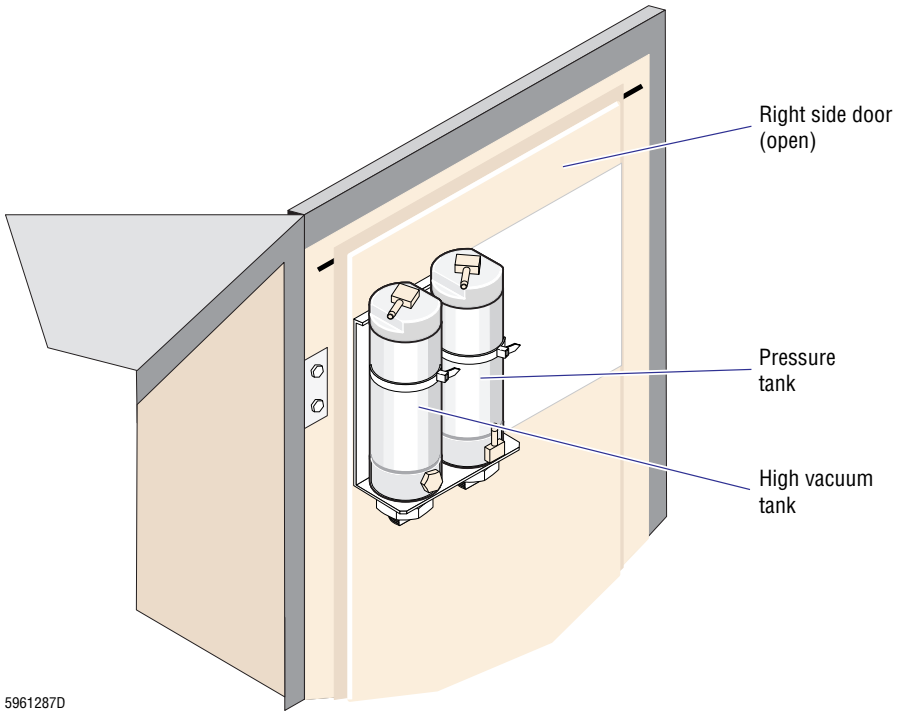

30-psi Pressure Distribution

The 30 psi pressure is routed to:

- The Pneumatic Monitor card for monitoring.
- Manifolds for distribution to solenoids and various pneumatic components. 30 psi is used to activate pinch valves, move cylinders, dispense reagents from pumps, and drain waste from the instrument.
- The sheath pressure regulator, RG3, for regulation of the sheath pressure.
- The sample pressure regulator, RG4, for regulation of the sample pressure.

Sheath Pressure Distribution

The sheath pressure is distributed to:

- The Pneumatic Monitor card for monitoring.
- The sheath tank to push the sheath fluid from the sheath tank through the flow cell, creating the diluent sheath in the flow cell.
- Solenoids LV7 (WBC) and LV8 (RBC) to generate mixing bubbles in the aperture baths.

Sample Pressure Distribution

The sample pressure is distributed to:

- The Pneumatic Monitor card for monitoring.
- The Mixing module to push sample from the mixing chamber through the flow cell, creating the sample stream in the flow cell.

High Vacuum Distribution

High, unregulated vacuum from the compressor/vacuum pump is routed through the vacuum trap to a vacuum chamber for distribution to the:

- The Pneumatic Monitor card for monitoring and to a vacuum tank (Figure 2.5-2). The vacuum tank maintains the high vacuum at an acceptable level during peak loads, even at high altitudes.
- The low vacuum regulator, RG1, for regulation to 6.0 in. of Hg.
- Various pneumatic components. High vacuum is used to drain the aperture baths and the mixing chamber, refill pumps, refill the sheath tank, and refill the bubble trap, VC2, for the sweep-flow line.

Low Vacuum Distribution

- The Pneumatic Monitor card for monitoring.
- The vacuum isolator chambers. The vacuum in the vacuum isolator chambers pulls the dilutions through the apertures, and pulls sweep-flow diluent behind the RBC aperture.

Pneumatic Monitor Card

The Pneumatic Monitor card is located on the upper rear Diluter door. See Figure 2.1-3 for location.

The Pneumatic Monitor card monitors the 60 psi, 30 psi, Hi Vac, Low Vac, sheath pressure, and diff (sample) pressure. See Figure 2.5-3.

Note: Although the sample pressure is routed to the Pneumatic Monitor card, this card does not actually monitor the sample pressure; it monitors the difference between the sheath pressure and the sample pressure, the diff pressure. To accomplish this, sheath pressure is routed to two ports on the Pneumatic Monitor card, each monitored by a transducer.

- One of the transducers compares the sheath pressure to atmosphere, to report the actual sheath pressure.
- The second transducer compares the sheath pressure to the sample pressure routed to the DIFF port, to report the diff pressure.

Figure 2.5-3 Pneumatic Monitor Card Block Diagram

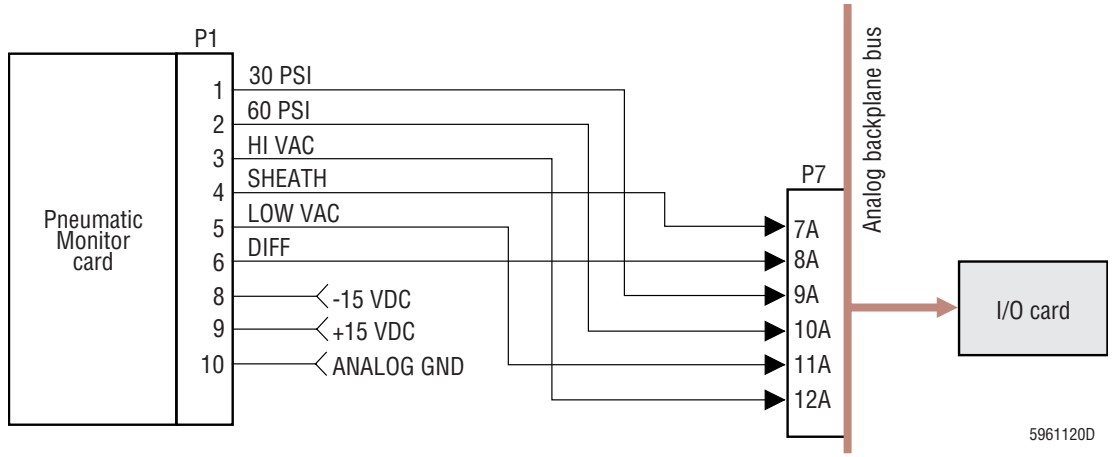

Six test points (TP100 through TP600) on the card, corresponding to each pressure or vacuum, provide access for external testing or monitoring. The test points are measured in Vdc. Refer to Table A.2-6 for the conversion from psi to Vdc for each test point. Signals from the Pneumatic Monitor card are sent to the I/O card.

The Pneumatic Monitor card monitors the 30-psi and 60-psi pressure during a compressor bleed so that the instrument software can control solenoids relative to the bleeding sequence and determine if the compressor is at a ready state for operation. Refer to Figure 2.5-4 for a diagram detailing the sequence of events.

Note: During power up, the HmX analyzer monitors vacuum and pressure. If these values are out of the specified range, then the HmX analyzer does not complete the power-up sequence. The *Download Not Successful* error message appears. (A specific vacuum or pressure error message does not appear.)

To determine the cause of the *Download Not Successful* message, externally monitor the vacuum and pressure measurements at the test points on the Pneumatic Monitor card and make the appropriate adjustments if the voltage value is out of range. Refer to Heading 4.25, PRESSURE/VACUUM ADJUSTMENT, for measurement and adjustment procedures.

Figure 2.5-4 Monitoring Sequence During Compressor Bleed

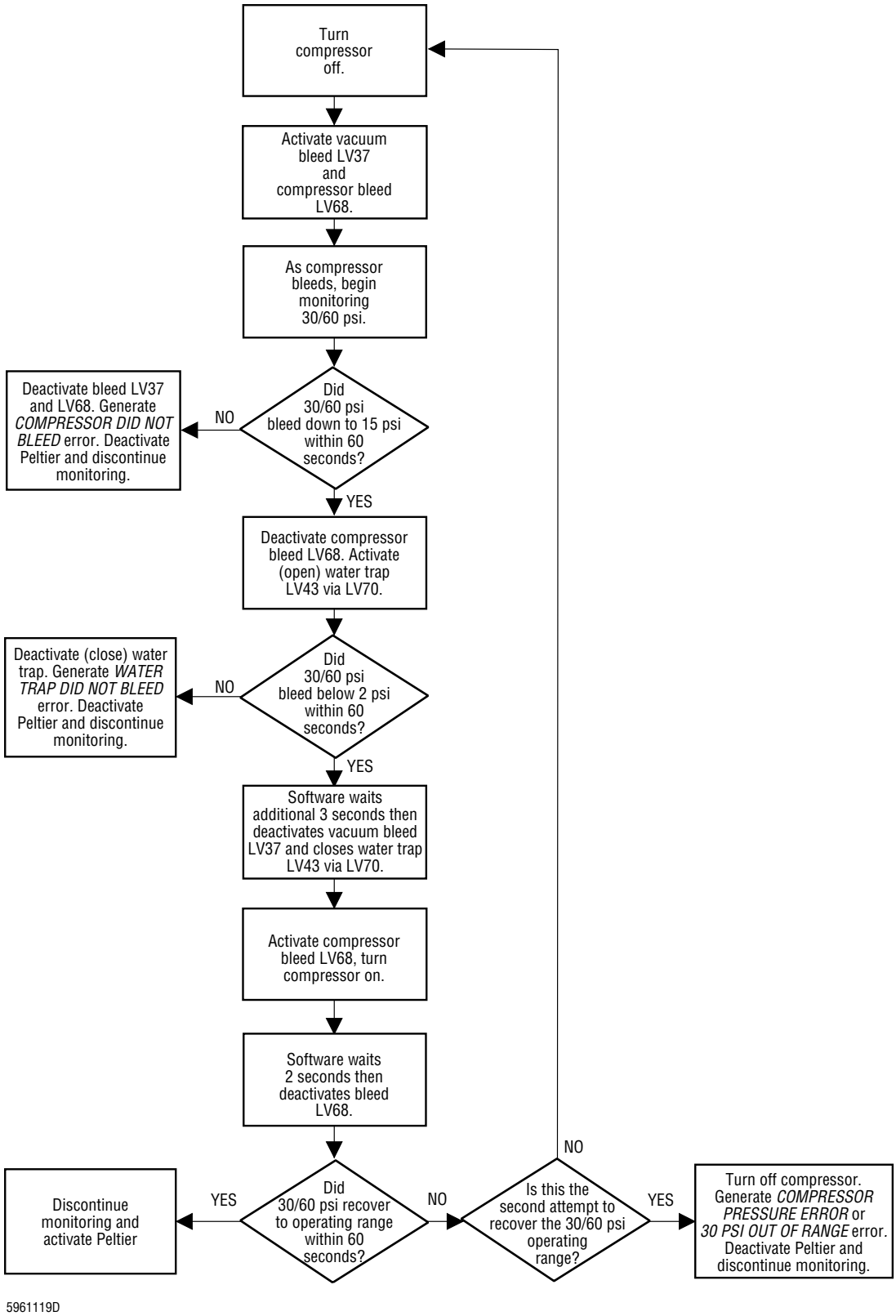

2.6 REAGENT SYSTEM

Reagent Input and Distribution

The HmX analyzer uses five reagents. To fully understand the function of each of these reagents, read the Method History section and the Reagents section in Chapter 1 of the customer's Reference Manual.

- Diluent - to dilute the blood for analysis and to rinse the system between samples
- CBC lytic reagent - to disrupt the RBCs for WBC analysis and to convert the Hgb for measurement
- Diff lytic reagent - to disrupt the RBCs while maintaining the WBCs in a near native state for analysis of the WBC subpopulations
- Diff leukocyte preservative - to preserve the WBCs in a near native state for analysis of the WBC subpopulations
- Cleaning agent - to clean the system and prevent protein buildup on the apertures.

One end of each reagent input line is attached to a pickup tube inserted into the reagent container, the other end to a fitting on the rear of the Main Unit. During the instrument cycles, the reagents are pulled from the reagent containers into the back of the instrument and to the respective reagent pumps or tanks.

Reagent Monitoring

On the HmX analyzer, the reagents flow through optical sensors mounted behind the reagent panel, inside the Main Diluter module. Reagents in the optical sensors transmit light, but air prevents light transmission. When the instrument runs out of a reagent and starts pulling bubbles through the reagent's optical sensor, the instrument halts immediately and generates a "reagent out" error message. No warning messages are generated.

Fluid Detector/Ram Pressure Card

The Fluid Detector/Ram Pressure card is mounted between the rear Diluter door and the Pneumatic Monitor card. See Figure 2.1-3 for location. The component side of the card faces the rear Diluter door.

Function

The Fluid Detector/Ram Pressure card contains circuitry to support the five optical reagent sensors. The Fluid Detector/Ram Pressure card monitors the status of the following:

- RBC bath overflow
- WBC bath overflow
- CBC lytic reagent
- PAK LYSE (Erythrolyse II reagent)
- PAK PRESERVE (StabiLyse reagent)
- Diluent
- Cleaning agent

A bank of LEDs (seen through the vent slots on the upper rear Diluter door) is mounted on the component side of the Fluid Detector/Ram Pressure card. See Table 2.6-1.

Table 2.6-1 Fluid Detector/Ram Pressure Card LED Positions (Viewing from the Rear of the Unit)

Position	10	9	8	7	6	5	4	3	2	1
Function	Not used	Not used	Spare	Cleaning agent	Diluent	StabiLyse reagent	Erythrolyse II reagent	CBC lytic reagent	WBC bath	RBC bath

These LEDs can be used to visually verify the status of each of the optical reagent sensors and bath overflow detectors.

LED ON = Reagent is sensed or bath overflow condition not detected.

LED OFF = Reagent is not sensed or bath overflow condition is detected.

To troubleshoot a status discrepancy, after verifying liquid is present in the respective sensor, determine if the card or sensor is at fault by swapping connections of sensor inputs with a known working sensor.

- If the status discrepancy follows the sensor, replace the sensor.

  Note: If a new sensor is not immediately available, you can bypass the reagent sensor via software to make the instrument operational. If you do bypass the reagent sensor, ensure the operator is aware the reagent level is not being monitored and restore the reagent monitoring function as soon as possible.
- If the status discrepancy does not follow the sensor, replace the Fluid Detector/Ram Pressure card.

Note: You must reboot the instrument each time to display the new status.

Connectors

The Fluid Detector/Ram Pressure card connectors are shown in Figure A.2-4 and described in Table A.2-3.

Reagent Temperature Control

Peltier Module Description

The Peltier module, PLB1, is located on the rear of the BSV module. See Figure A.5-2 for location.

The Peltier module consists of:

- A Peltier Controller card. See Figure A.5-2 for location. See Figure 2.6-1 for connectors, signals, and LEDs.
- A ceramic reagent manifold with input and output fittings.
- A set of Peltier cells mounted against the ceramic reagent manifold.
- A thermistor mounted inside the ceramic reagent manifold.
- An ambient temperature sensor mounted on the front of the BSV module. See Figure A.5-1 for location.

Figure 2.6-1 Peltier Controller Card

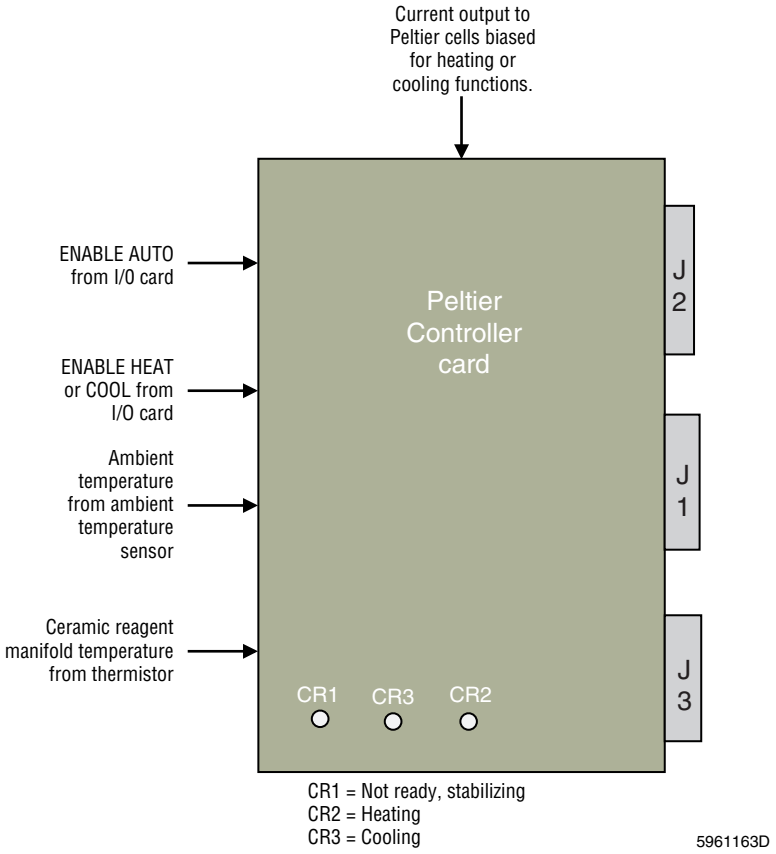

Peltier Module Function

The Peltier module allows the instrument to monitor and adjust the temperature of the reagents used in the diff mixing chamber to obtain an optimum chemical reaction in the mixing chamber.

The Erythrolyse II reagent and the mixing chamber rinse (diluent from the sheath tank) are routed through the ceramic reagent manifold on their way to the diff mixing chamber. When the Peltier cells are electronically activated into either the Heating mode or the Cooling mode, the Peltier cells heat or cool the ceramic reagent manifold which, in turn, heats or cools the reagents flowing through it.

The ambient temperature sensor monitors the ambient room temperature. The Peltier module tracks the ambient room temperature and heats or cools the reagents in the ceramic reagent manifold in inverse proportion to changes in that temperature; when the ambient room temperature decreases, the Peltier module heats the reagents in the ceramic reagent manifold, and when the ambient room temperature increases, the Peltier module cools the reagents.

The instrument software compares the temperature in the ceramic reagent manifold to the ambient room temperature to determine if the Peltier module is performing correctly. Table 2.6-2 shows the temperature that the Erythrolyse II reagent should be, ±2.8°C, depending on the ambient room temperature.

Table 2.6-2 Ambient Versus Erythrolyse II Reagent Temperatures

Ambient Temp °C	Erythrolyse II Reagent Temp °C	Ambient Temp °C	Erythrolyse II Reagent Temp °C	Ambient Temp °C	Erythrolyse II Reagent Temp °C	Ambient Temp °C	Erythrolyse II Reagent Temp °C
12.8	47.5	20.0	31.7	25.6	19.5	32.8	3.6
13.3	46.3	20.6	30.5	26.1	18.3	33.3	2.4
13.9	45.1	21.1	29.3	26.7	17.1	33.9	1.2
14.4	43.9	21.7	28.0	27.2	15.8	34.4	0.0
15.0	42.7	22.2	26.8	27.8	14.6	35.0	-1.2
15.6	41.4	21.7	28.0	28.3	13.4	34.4	0.0
16.1	40.2	22.2	26.8	28.9	12.2	35.0	-1.2
16.7	39.0	22.8	25.6	29.4	11.0	35.6	-2.5
17.2	37.8	23.3	24.4	30.0	9.7	36.1	-3.7
17.8	36.6	23.9	23.2	30.6	8.5	36.7	-4.9
18.3	35.3	24.4	21.9	31.1	7.3	37.2	-6.1
18.9	34.1	25.0	20.7	31.7	6.1	37.8	-7.3
19.4	32.9			32.2	4.9		

Temperature Range Cycles

The Peltier Controller card, I/O card, and 376 CPU card work together to control the operation of the Peltier module based on the ambient room temperature. The software controlling the Peltier module includes different mixing cycles for four temperature ranges. Table 2.6-3 lists the four temperature ranges and describes the differences in the mixing cycles.

Table 2.6-3 Temperature Range Cycles

Range No.	Temperature °C	Temperature °F	Temperature Range Cycles
1	13.3 - 20.5	56 - 69	Before sample delivery, the mixing chamber receives a pre-rinse of Erythrolyse II reagent and a full rinse of heated diluent via the Peltier module. The mixing cycle is 2.5 seconds.
2	21.1 - 28.3	70 - 83	Before sample delivery, the mixing chamber receives a pre-rinse of Erythrolyse II reagent via the Peltier module. The mixing cycle is 2.5 seconds.
3	28.9 - 30.5	84 - 87	Before sample delivery, the mixing chamber receives a pre-rinse of Erythrolyse II reagent and a half rinse of cooled diluent via the Peltier module. The mixing cycle is 1.5 seconds.
4	31.1 - 35.0	88 - 95	Before sample delivery, the mixing chamber receives a pre-rinse of Erythrolyse II reagent and a full rinse of cooled diluent via the Peltier module. The mixing cycle is 1.5 seconds.

Waste Removal and Monitoring

During the cycle, waste is collected in chambers in the Main Unit and drained through the waste line on the rear of the Main Unit.

When a waste container is used, the I/O card monitors a waste float sensor located inside the pickup tube in the waste container to prevent backup into the instrument. When waste is routed directly to a drain, the waste level sensor is bypassed with a jumper.

2.7 SAMPLE HANDLER SYSTEM - SAMPLE HANDLER CARD

The Sample Handler card is located in the left compartment of the HmX analyzer. See Figure 2.1-5 for location.

Function

Refer to the block diagrams, Figure 2.7-1 and Figure 2.7-2. Shading in a block indicates the circuit card is on the data bus.

The Sample Handler card contains an 80196 micro-controller that communicates with the 376 CPU card via an RS-422 serial connection.

The Sample Handler card:

- Interfaces the blood/bubble detectors and the Bar-Code Reader Decoder card to the 376 CPU card.
- Controls the Autoloader or Rotary Cap-Pierce module.

LEDs

Four LEDs on the side of the Sample Handler card light for a designated purpose during power up, reset, instrument cycles, and download. From top to bottom, the four LEDs are:

- CPU (CR4)
- ROM (CR3)
- RAM (CR2)
- I/O (CR1).

Responses During Power Up

On power up, the four LEDs light, indicating the on-board tests have begun. Starting at the top with CPU, each LED extinguishes as the on-board tests pass. If an LED fails to extinguish, it indicates a failure of this portion of the card, and the card locks up. For example, if the ROM LED does not extinguish, the card has failed the ROM on-board tests. If the card locks up, reboot the system.

If the on-board power-up tests pass, the I/O LED flashes, indicating the Sample Handler card has entered the "wait for download mode." The I/O LED flashes at approximately one flash per second indicating that it does not have the Sample Handler code, and that it is waiting for the DMS to download the Sample Handler code.

Figure 2.7-1 Sample Handler Card with Autoloader Module Block Diagram

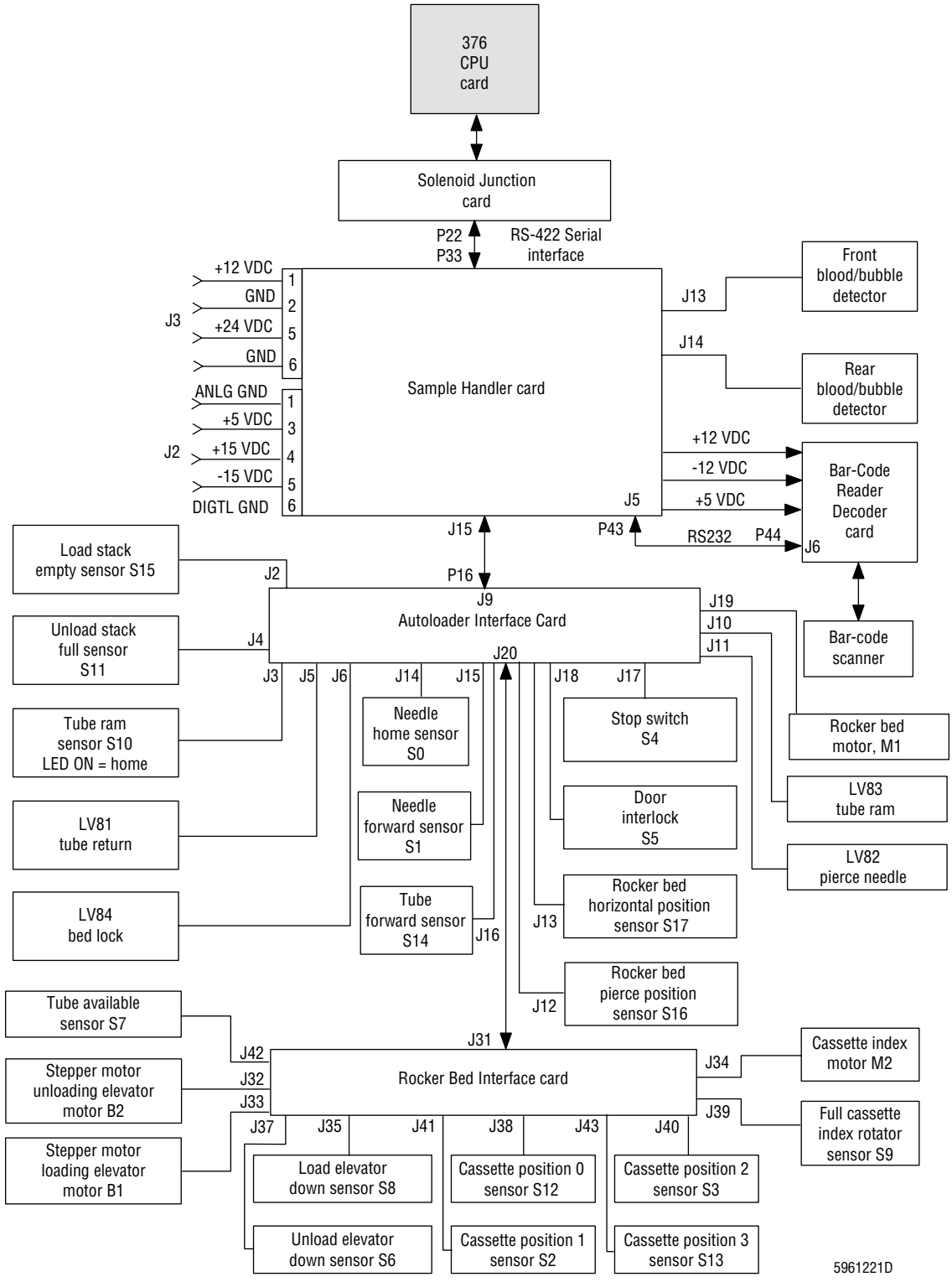

Figure 2.7-2 Sample Handler Card with Rotary Cap-Pierce Module Block Diagram

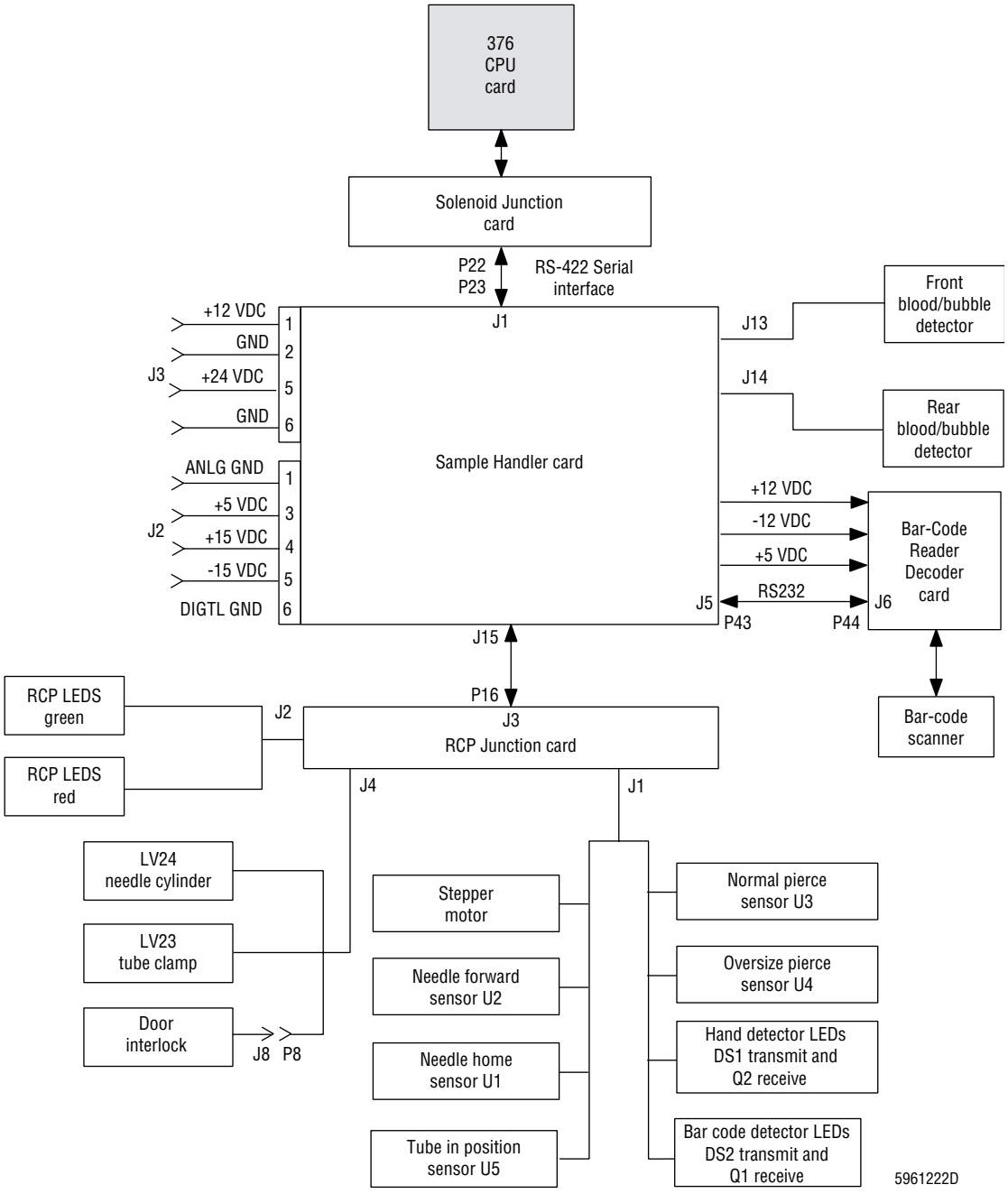

Responses During Download

When the Sample Handler card detects the start of a flash download, the I/O and RAM LEDs light indicating the Sample Handler card I/O is receiving the download from the DMS and is placing the code into RAM.

During the download if a communication problem develops, the CPU and I/O LEDs light indicating the Sample Handler card software is attempting to abort the download. The Sample Handler card remains in this mode until the DMS aborts the download.

During or after download if the lower front door is opened, the CPU LED flashes and the instrument is immediately put into a protect mode.

After the download, if a cap-pierce sensor is defective or out of alignment, the LEDs go out and the Sample Handler card locks up until the sensor problem is corrected. On HmX analyzers with a Rotary Cap-Pierce module, the red LED near the tube entry port lights, indicating system halt. If a lock-up occurs, reboot the system.

After the download is successfully completed, on HmX analyzers with a Rotary Cap-Pierce module the LEDs are used as described below in Responses to the Carousel Position in the Rotary Cap-Pierce Module.

Responses to the Carousel Position in the Rotary Cap-Pierce Module

After the Sample Handler code is downloaded, the LEDs indicate the different locations of the carousel by lighting the LEDs according to the carousel location as it rotates.

- Top LED - carousel is at HOME position.
- Second LED - carousel is between HOME and PIERCE position.
- Third LED - carousel is at PIERCE position.
- Bottom LED - carousel is between PIERCE and HOME position.

Response to a Power Fluctuation

If a power fluctuation occurs, the AC LOW DETECT signal is asserted. This change of state resets the 376 CPU card. The 376 CPU card simultaneously sends a RESET command to the Sample Handler card. After the Sample Handler card resets, it performs the functions listed above under Responses During Power Up, causing it to lose the Sample Handler code stored in RAM. The I/O LED flashes at approximately one flash per second, indicating that it does not have the Sample Handler code. The 376 CPU card automatically downloads the Sample Handler code whenever there is a power problem.

Ensuring the Instrument and the Sample Handler Configurations Match

When the system is booted, the status and/or presence of the **STOP** switch on the lower front door indicates to the Sample Handler card if the hardware of the HmX analyzer is configured as an Autoloader or a Rotary Cap-Pierce module. During system initialization, this "Hardware Signature" must match the Sample Handler "Style" entered at the DMS when the enhanced software package was initially installed. If the two do not match, the system fails to operate and the following error message appears on the DMS during software installation: *Inconsistent Sample Handler Hardware. Check hardware -- Reinstall Software.*

Avoiding Instrument Damage During a Download

During a download, while the system is booting and before completion of the Sample Handler code download, a Gate Array Logic (GAL) chip, U11, on the Sample Handler card provides hazard control features to prevent potential damage to the Autoloader or Rotary Cap-Pierce modules. For example, if the needle is not retracted during the download, the GAL does not allow moving parts to cycle; instead, the needle retracts.

Jumpers

The Sample Handler card has 7 jumper locations (X28 - X34). See Figure A.2-11 for the correct jumper configuration.

Sample Handler Card Inputs/Outputs

Inputs:

- Electronic Power Supply
- Solenoid Junction card
- Front blood detector
- Rear blood detector
- Bar-Code Reader Decoder card
- **On HmX analyzer with Autoloader module**: Autoloader Interface card
- **On HmX analyzer with Rotary Cap-Pierce module**: RCP Junction card

Outputs:

- Solenoid Junction card
- Bar-Code Reader Decoder card
- **On HmX analyzer with Autoloader module**: Autoloader Interface card
- **On HmX analyzer with Rotary Cap-Pierce module**: RCP Junction card

2.8 SAMPLE HANDLER SYSTEM - ROTARY CAP-PIERCE MODULE

Function

The Rotary Cap-Pierce module is a closed vial, cap-piercing mechanism, capable of accepting one specimen tube at a time for introducing a sample into the instrument. For the location of the Rotary Cap-Pierce module, see Figure 2.1-1.

Description

The Rotary Cap-Pierce module consists of:

- A bar-code reader for identifying the specimen tubes. See Figure 2.8-1.
- A carousel assembly for receiving the specimen tubes from the operator and moving the specimen tubes into position for piercing. See Figure 2.8-1.
- A needle assembly for piercing the specimen tubes for sample aspiration. See Figure 2.8-1.
- A tube ejector and exit tray for collecting the specimen tubes for retrieval by the operator. See Figure 2.8-1.
- Motors, solenoids, cylinders, and sensors/switches for performing and monitoring the functions of the Rotary Cap-Pierce module.

  All the motors (B = stepper motors), solenoids (LV), and sensors/switches (U) associated with the Rotary Cap-Pierce module functions, except the blood/bubble detectors, are listed in Table 2.8-1, Rotary Cap-Pierce Module - Motors, Solenoids, and Sensors/Switches. The locations of these components are shown in Figure 2.8-1.

  For a description of the blood/bubble detectors, see Blood/Bubble Detectors under Heading 2.11, SAMPLE PROCESSING SYSTEM - DILUTER.
- An interface card, the RCP Junction card, for interfacing the components in the Rotary Cap-Pierce module with the Sample Handler card. The Rotary Cap-Pierce module is controlled via the Sample Handler card.
  - For details about the RCP Junction card, see RCP Junction Card at the end of this section.
  - For details about the Sample Handler card, see Heading 2.7, SAMPLE HANDLER SYSTEM - SAMPLE HANDLER CARD.

Table 2.8-1 Rotary Cap-Pierce Module - Motors, Solenoids, and Sensors/Switches

Item	Functional Description	Function	Style	Location
B1	Carousel motor	Rotates carousel position determined by U1 - U5.	Stepper motor	Figure 2.8-1, carousel assembly
LV23	Tube clamp solenoid	Controls position of the clamp cylinder, CL4.	Solenoid	Figure 2.8-1, lower left front of module
LV24	Needle cylinder solenoid	Controls position of the needle cylinder, CL5.	Solenoid	Figure 2.8-1, lower left front of module
DS1/ Q2	Hand detector LEDs	This two-part sensor, DS1 transmit (on the right) and Q2 receive (on the left), checks for objects blocking carousel rotation before the carousel is rotated.	Transmitter/ receiver	Figure 2.8-1, carousel assembly

Table 2.8-1 Rotary Cap-Pierce Module - Motors, Solenoids, and Sensors/Switches *(Continued)*

Item	Functional Description	Function	Style	Location
DS2/ Q1	Bar-code detector LEDs	This two part sensor, DS2 transmit (on the left) and Q1 receive (on the right), senses the presence of a tube and activates the bar-code laser scanner.	Transmitter/ receiver	Figure 2.8-1, carousel assembly
U1	Needle home	Senses when the needle is retracted to the home position.	Optical sensor or Hall effect sensor	Figure 2.8-1, next to the needle assembly (optical) or on CL5 (Hall effect).
U2	Needle forward	Senses when the needle is extended.	Optical sensor or Hall effect sensor	Figure 2.8-1, next to the needle assembly (optical) or on CL5 (Hall effect).
U3	Normal position	Senses a normal sized specimen tube is in the pierce position.	Optical sensor	Figure 2.8-1, on code wheel
U4	Oversized position	Senses an oversized specimen tube is in the pierce position.	Optical sensor	Figure 2.8-1, on code wheel
U5	Tube available	Detects when a specimen tube is in one of the tube slots of the carousel.	Optical sensor	Figure 2.8-1, carousel assembly
S18	Door interlock	Senses the front door is opened/closed.	Magnetic sensor	On lower left corner of main frame

Figure 2.8-1 Rotary Cap-Pierce Module Components

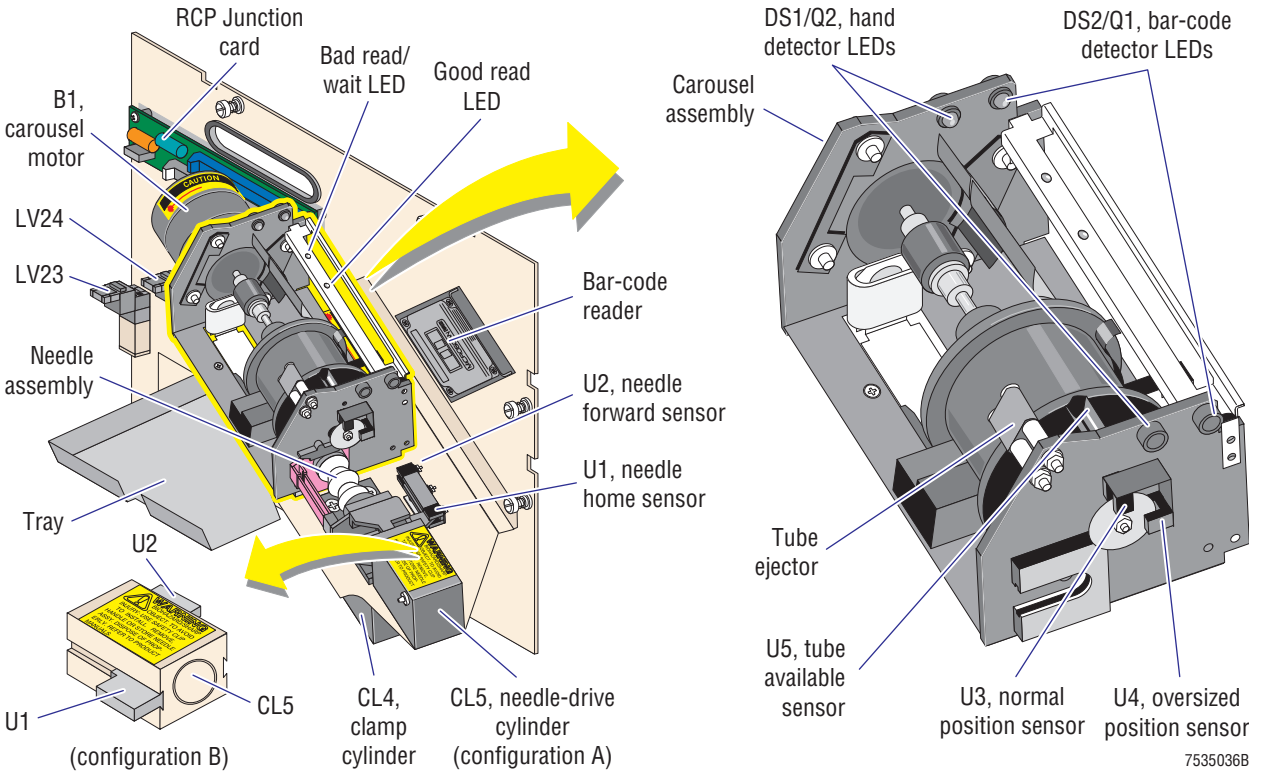

Summary of Operation

To initiate a cycle in the Rotary Cap-Pierce module, the operator begins at the DMS, selecting the Primary mode of operation and the size of the specimen tube to be processed.

Note: The Rotary Cap-Pierce module can process two sizes of specimen tubes, normal and oversized. The tube-size selection at the DMS determines to which position the carousel assembly homes.

Next the operator places the specimen tube in front of the scanning window, with the bar-code label facing the reader. The bar-code detector LEDs, DS2/Q1, detect the presence of the tube and turn the bar-code reader on. After the bar-code label is read, a beeper sounds on the Bar-Code Reader Decoder card and the green LED flashes for three to four seconds. The operator must insert the tube into the carousel assembly before the green LED stops flashing.

When the operator inserts the specimen tube into the carousel assembly:

1. The specimen tube activates the tube available sensor, U5, indicating a specimen tube is in a tube slot.
2. The red LED lights and remains on until the tube is ejected.
3. The instrument checks the condition of:
   - The door interlock, S18, to ensure the lower door is closed.
   - The needle home sensor, U1, to ensure the needle is retracted.
   - The hand detector LEDs, DS1/Q2, to ensure nothing is blocking the rotation of the carousel assembly.
4. The carousel motor, B1, rotates the carousel assembly to the piercing position.
5. The appropriate sensor on the code wheel, normal position, U3, or oversized position, U4, indicates when to stop.

When the specimen tube is in the piercing position:

1. LV23 is energized, activating CL4 to clamp the tube in position.
2. LV24 is energized, activating CL3 to extend the needle, piercing the cap of the tube.
3. The instrument checks the needle forward sensor, U2, to ensure the needle is fully extended.
4. The instrument aspirates a sample from the specimen tube.

After aspiration:

1. LV24 is de-energized and CL3 retracts the needle.
2. LV23 is de-energized and CL4 withdraws the clamp from the tube.
3. The instrument checks the blood/bubble detectors to ensure the aspiration was good. If the blood/bubble detectors sense a partial aspiration, the instrument rinses the aspiration pathway and repierces the specimen tube for a second aspiration.

After the instrument starts analyzing the sample, the carousel assembly rotates the specimen tube to the tube ejector position where the tube ejector forces the tube out into the exit tray. Then the carousel assembly rotates back to the home position, ready for the next specimen tube.

RCP Junction Card

Function

The RCP Junction card is mounted on the front of the Rotary Cap-Pierce. See Figure 2.8-1 for location.

The RCP Junction card interfaces the entire Rotary Cap-Pierce module to the Sampler Handler card via a ribbon cable from J3/P16 on the RCP Junction card to P15/J15 on the Sample Handler card. The RCP Junction card interfaces:

- Eight sensors:
  - DS1/Q2, hand detector LEDs
  - DS2/Q1, bar-code detector LEDs
  - S18, door interlock
  - U1, needle home
  - U2, needle forward
  - U3, normal position
  - U4, oversized position
  - U5, tube available
- The carousel stepper motor, B1
- Two solenoids:
  - LV23, tube clamp
  - LV24, needle cylinder

For details about these components, refer to Table 2.8-1, Rotary Cap-Pierce Module - Motors, Solenoids, and Sensors/Switches.

RCP Junction Card Inputs/Outputs

Inputs:

- Electronic Power Supply
- Sample Handler card
- Rotary Cap-Pierce module sensors:
  - DS1/Q2, hand detector
  - DS2/Q1, bar-code detector
  - S18, door interlock
  - U1, needle home
  - U2, needle forward
  - U3, normal position
  - U4, oversized position
  - U5, tube available

Outputs:

- Sample Handler card
- LV23, tube clamp
- LV24, needle cylinder
- B1, carousel motor

2.9 SAMPLE HANDLER SYSTEM - AUTOLOADER MODULE

Function

The Autoloader module is a specimen-tube transport system with a closed vial, cap-piercing mechanism, capable of transporting and processing up to 25 specimen tubes for introducing samples into the instrument. For the location of the Autoloader module, see Figure 2.1-2.

Description

The Autoloader module consists of:

- A loading bay for holding the cassettes full of unprocessed specimen tubes. See Figures 2.9-1 and 2.9-2.
- A rocker bed for transporting the cassettes of specimen tubes from the loading bay to the piercing station and from the piercing station to the unloading bay, and for mixing (rocking) the specimen tubes. See Figures 2.9-1 and 2.9-2.
- A bar-code reader for identifying the cassette, the tube position in the cassette, and the specimen tubes (optional). See Figures 2.9-1 and 2.9-2.
- A needle assembly for piercing the specimen tubes for sample aspiration. See Figures 2.9-1 and 2.9-2.
- An unloading bay for collecting the cassettes full of processed specimen tubes for retrieval by the operator. See Figures 2.9-1 and 2.9-2.
- Motors, solenoids, cylinders, and sensors/switches for performing and monitoring the functions of the Autoloader module.

  All the motors (B = stepper motors, M = dc motors), solenoids (LV), and sensors/switches (S) associated with the Autoloader module functions, except the blood/bubble detectors, are listed in Table 2.9-1, Autoloader Module - Motors, Solenoids, and Sensors/ Switches. The locations of these components are shown in Figures 2.9-1 through 2.9-3.

  For a description of the blood/bubble detectors, see Blood/Bubble Detectors under Heading 2.11, SAMPLE PROCESSING SYSTEM - DILUTER.
- Two interface cards, the Rocker Bed Interface card for interfacing the components on the rocker bed to the Autoloader Interface card, and the Autoloader Interface card for interfacing the components in the Autoloader module with the Sample Handler card. The Autoloader module is controlled via the Sample Handler card.
  - For details about the interface cards, see Autoloader Interface Card and Rocker Bed Interface Card at the end of this section.
  - For details about the Sample Handler card, see Heading 2.7, SAMPLE HANDLER SYSTEM - SAMPLE HANDLER CARD.

Table 2.9-1 Autoloader Module - Motors, Solenoids, and Sensors/ Switches

Item	Functional Description	Function	Style	Location
B1	Load elevator motor	Raises and lowers the right elevator (lift) to place a cassette onto the rocker bed.	Stepper motor	Figure 2.9-2, on rocker bed
B2	Unload elevator motor	Raises and lowers the left elevator to remove a cassette from the rocker bed.	Stepper motor	Figure 2.9-2, on rocker bed

Table 2.9-1 Autoloader Module - Motors, Solenoids, and Sensors/ Switches *(Continued)*

Item	Functional Description	Function	Style	Location
LV81	Tube return	Controls the tube return [into cassette] cylinder, CL9. CL9 returns the specimen tube into the cassette after sampling.	Solenoid	Figure 2.9-3, on module housing
LV82	Pierce needle	Returns the tube ram cylinder, CL7, in conjunction with LV83, and controls the needle drive cylinder, CL6. **Note**: On the Autoloader Interface card, LV82 is labeled SW2.	Solenoid	Figure 2.9-3, on Autoloader Interface card
LV83	Tube ram	Controls the tube ram cylinder, CL7, in conjunction with LV82. CL7 pushes the specimen tube out of the cassette. **Note**: On the Autoloader Interface card, LV83 is labeled SW3.	Solenoid	Figure 2.9-3, on Autoloader Interface card
LV84	Bed lock	Controls the bed-lock cylinder, CL8. CL8 locks the rocker bed in appropriate positions.	Solenoid	Figure 2.9-3, on module housing
M1	Rocker bed motor	Controls rocking of the rocker bed.	DC motor	Figure 2.9-3, on module housing
M2	Cassette index motor	Drives the cassette index mechanism	DC motor	Figure 2.9-2, on rocker bed
S0	Needle home	Senses the needle is fully retracted to the home position.	Hall effect sensor or Optical sensor	Figure 2.9-1, on CL6 (Hall effect) or Figure 2.9-2, at Piercing station (optical)
S1	Needle forward	Senses the needle is forward in the piercing position.	Hall effect sensor or Optical sensor	Figure 2.9-1, on CL6 (Hall effect) Figure 2.9-2, at Piercing station (optical)
S2	Cassette position 1	Senses a cassette has advanced the first time, cassette position 1.	Optical sensor	Figure 2.9-1, on rocker bed
S3	Cassette position 2	Senses that a cassette is overlapping the elevator platform, cassette position 2.	Optical sensor	Figure 2.9-1, on rocker bed
S4	**STOP** switch	Immediately stop Autoloader mechanism.	Switch	On upper door
S5	Door interlock	Senses the front door is opened/closed.	Magnetic sensor	Figure 2.9-1, on module housing
S6	Unload elevator down	Senses when the left elevator platform is all the way down.	Optical sensor	Figure 2.9-1, on rocker bed
S7	Tube available	Senses the presence of a specimen tube in the cassette at the piercing station.	Optical sensor	Figure 2.9-1, on rocker bed
S8	Load elevator down	Senses when the right elevator platform is all the way down.	Optical sensor	Figure 2.9-1, on rocker bed
S9	Full cass index rotation	Senses when the cassette indexing mechanism is inactive. This sensor becomes not true when the cassette indexing mechanism is advancing the cassette.	Optical Sensor	Figure 2.9-1, on rocker bed

Table 2.9-1 Autoloader Module - Motors, Solenoids, and Sensors/ Switches *(Continued)*

Item	Functional Description	Function	Style	Location
S10	Tube ram	Senses the tube ram cylinder is fully retracted to the home position.	Hall effect sensor	Figure 2.9-3, on tube ram
S11	Unload stack full	Senses the unloading bay is full - five cassettes are present.	Optical sensor	Figure 2.9-1, on module housing
S12	Cassette position 0	Senses a cassette is placed on the rocker bed and is oriented correctly, cassette position 0.	Optical sensor	Figure 2.9-1, on rocker bed
S13	Cassette position 3	Senses that a cassette is over the elevator platform, cassette position 3.	Optical sensor	Figure 2.9-1, on rocker bed
S14	Tube forward	Senses a specimen tube is present and pushed against the stop in the piercing station, ready for piercing.	Optical sensor	Figure 2.9-2, at Piercing station
S15	Load stack empty	Senses the loading bay is empty.	Optical sensor	Figure 2.9-1, on module housing
S16	Pierce position	Senses when the rocker bed is in the forward, piercing position.	Optical sensor	Figure 2.9-2, on module housing
S17	Horizontal position	Senses when the rocker bed is in the level, cassette loading and unloading position.	Optical sensor	Figure 2.9-2, on module housing

Figure 2.9-1 Autoloader Module Components, Front View, Rocker Bed Forward

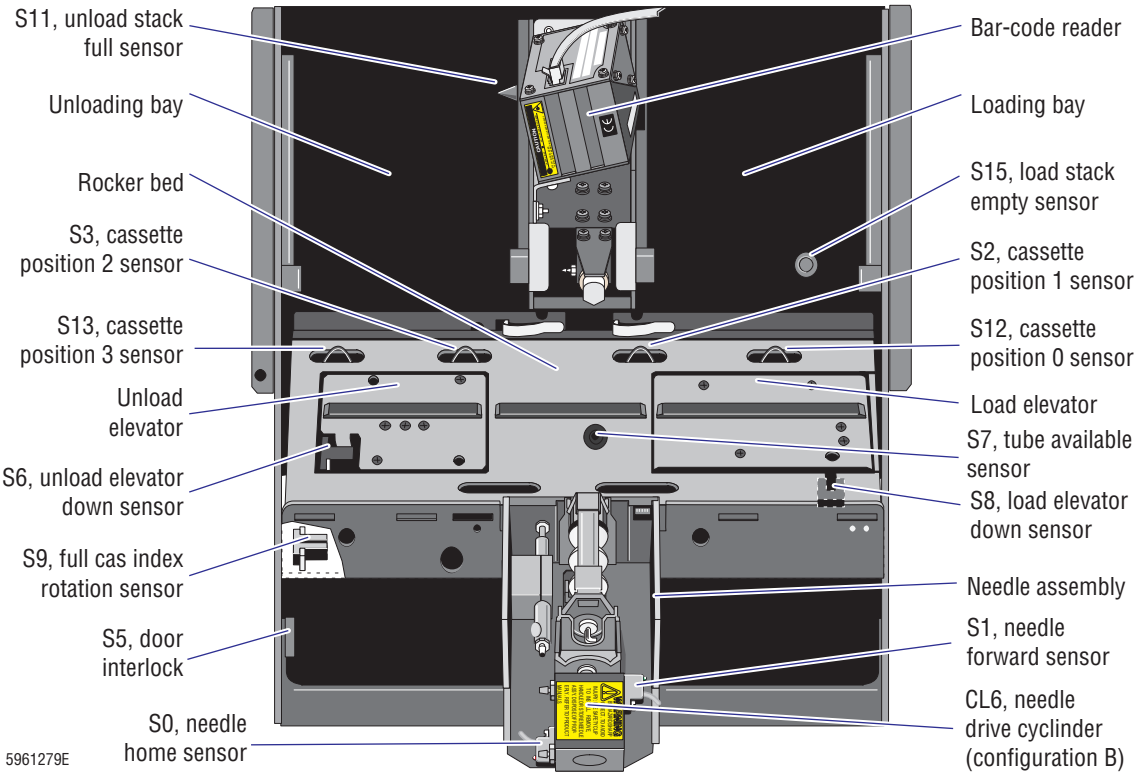

Figure 2.9-2 Autoloader Module, Front View, Rocker Bed Backward

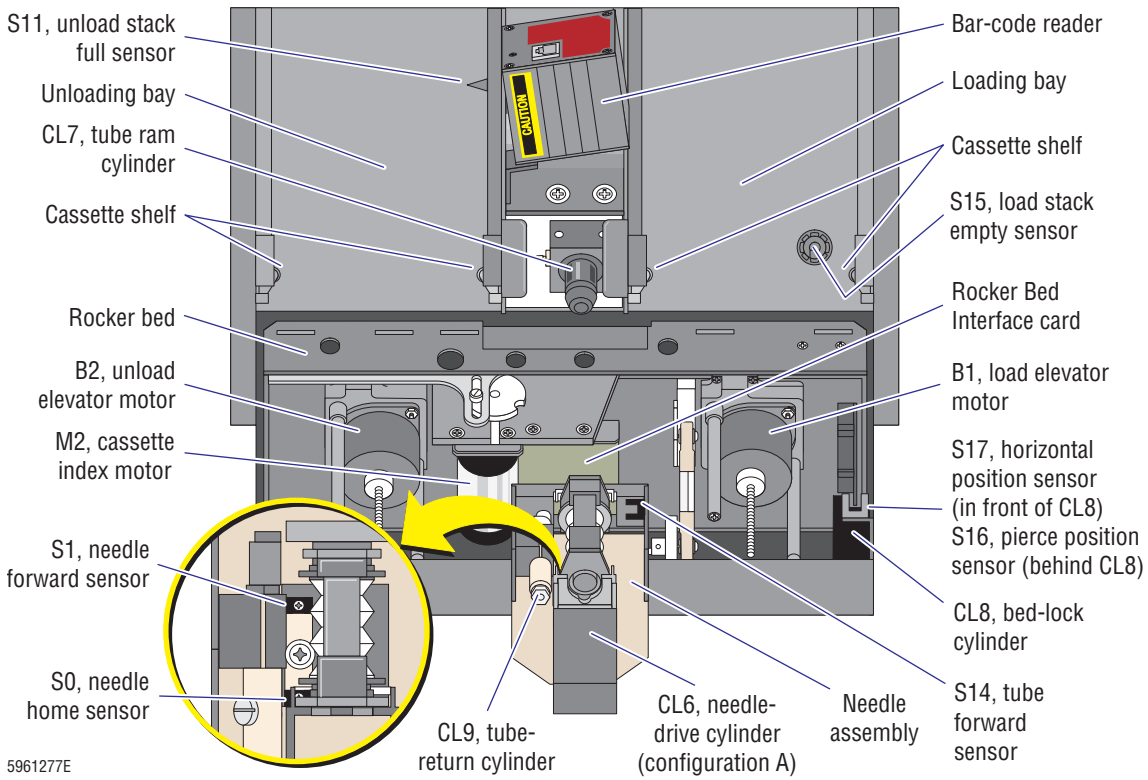

Figure 2.9-3 Autoloader Module Components, Rear View

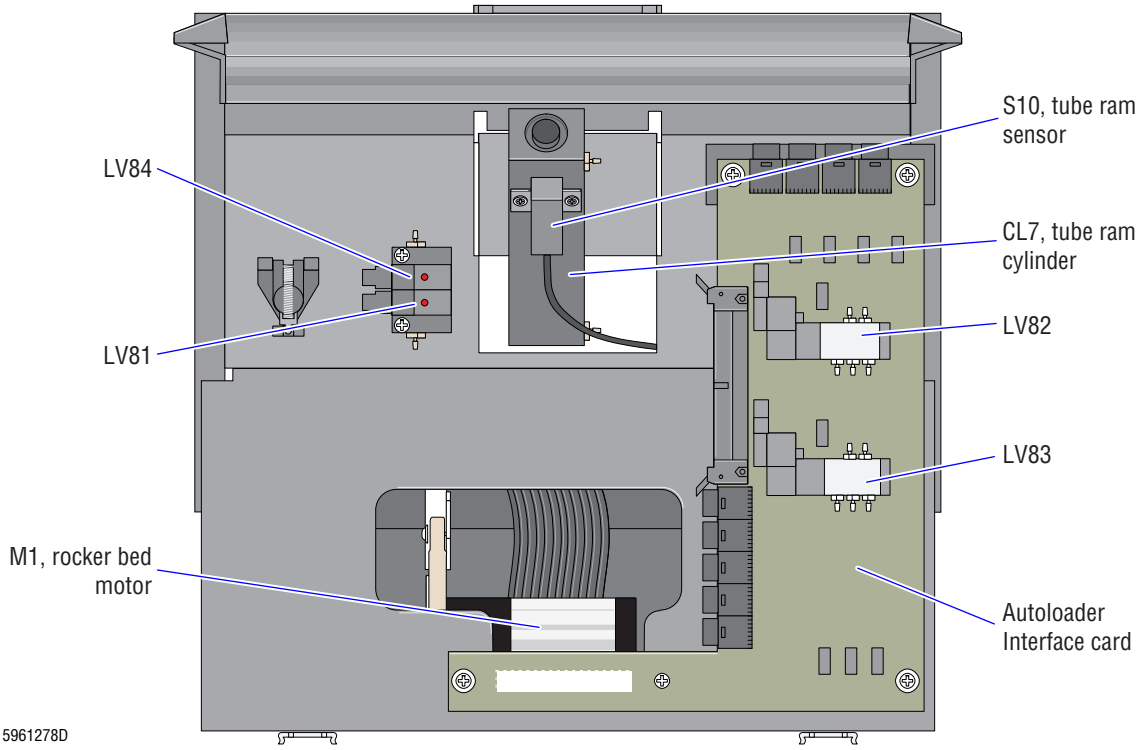

Summary of Operation

To process samples using the Autoloader module, the operator inserts the specimen tubes into bar-code labeled cassettes (up to five tubes per cassette), and places the cassettes (up to five) in the loading bay.

Placing a cassette on the cassette shelf in the loading bay activates the load stack empty sensor, S15, indicating a cassette is available for cycling. To initiate a Primary-mode cycle, the operator must both place a cassette in the loading bay to activate S15 and select the Primary mode of operation at the DMS - in either order.

After the operator initiates the cycle, the instrument:

1. Checks the condition of:
   - The door interlock, S5, to ensure the lower door is closed.
   - The needle home sensor, S0, to ensure the needle is retracted.
2. Homes the rocker bed to the horizontal position and engages the bed lock.
   - The rocker bed motor, M1, moves the rocker bed.
   - One of two rocker bed position sensors, the horizontal position sensor, S17, senses when the rocker bed is horizontal.
   - The bed lock consists of a solenoid activated cylinder, CL8, and a lock wheel with two notches, one for the horizontal position of the rocker bed, and the other for the pierce position. To engage the bed lock, LV84 is energized, which extends CL8 into one of the notches in the lock wheel.

After the rocker bed homes:

1. The right elevator ascends, pushing the bottom cassette in the loading bay above the cassette shelf and pushing the cassette shelf rollers out of the way, into the side walls of the loading bay. The load elevator stepper motor, B1, raises and lowers the right elevator.
2. The right elevator descends, lowering the bottom cassette to the rocker bed.
3. After the right elevator passes the cassette shelf, the cassette shelf rollers springs back into position so that only one cassette is lowered onto the rocker bed.

After the cassette is lowered onto the rocker bed:

1. The instrument checks:
   - The load elevator down sensor, S8, to ensure the elevator is all the way down.
   - The cassette position 0 sensor, S12, to ensure the cassette is at the rocker bed and is oriented correctly.
2. The cassette index motor, M2, drives the cassette index mechanism which moves two index fingers in and out of the top of the rocker bed. The index finger nearest the loading bay hooks onto one of the rails on the bottom of the cassette and advances the cassette from right to left on the rocker bed.
3. The full cassette index rotation sensor, S9, monitors the rotation of the cassette index mechanism; nine rotations advance a cassette from the loading bay to the unloading bay.
4. As the cassette advances, four cassette position sensors on the top rear edge of the rocker bed monitor its progress.

5. When the cassette simultaneously activates the cassette position 0 sensor, S12, and the cassette position 1 sensor, S2, the rocker bed starts rocking to mix the specimen tubes and the cassette index mechanism advances the cassette to the Piercing station.
6. The cassette index mechanism continues to advance the cassette until the first specimen tube in the cassette pushes down on the spring-loaded flag of the tube available sensor, S7, indicating a tube is present in the Piercing station.

   Note: The cassette position 1 sensor, S2, and cassette position 2 sensor, S3, in conjunction with the tube available sensor, S7, monitor the advancement of the cassette through the Piercing station.

At the Piercing station:

1. The cassette index mechanism stops advancing the cassette, but the rocker bed continues to rock.
2. The bar-code reader scans the cassette/position label on the cassette and the specimen tube label. If the bar-code reader is unable to read the cassette/position label, the Autoloader module stops and the instrument generates an error.

   Note: The scanner only turns ON if a specimen tube is detected at the Piercing station.
3. If the bar-code reader successfully reads the bar-code labels, the rocker bed is tilted forward to the pierce position, and locked into position. The pierce position sensor, S16, senses when the rocker bed is in the pierce position.
4. When the rocker bed is locked in the pierce position, LV83 is energized to extend the tube-ram cylinder, CL7. CL7 pushes the specimen tube out of the cassette and holds it against the dead plate at the Piercing station.
5. The tube forward sensor, S14, senses when the tube is in position for piercing.
6. LV82 is energized, activating the needle drive cylinder, CL6. CL6 extends the needle, piercing the cap of the tube.
7. The instrument checks the needle forward sensor, S1, to ensure the needle is fully extended, and then aspirates a sample from the specimen tube.

After aspiration:

1. LV82 is de-energized and CL6 retracts the needle. The needle home sensor, S0, senses when the needle is fully retracted.
2. The instrument checks the blood/bubble detectors to ensure the aspiration was good. If the blood/bubble detectors sense a partial aspiration, the instrument rinses the aspiration pathway and repierces the specimen tube for a second aspiration.
3. LV83 is de-energized and CL7 retracts, releasing its hold on the specimen tube. The tube ram sensor, S10, senses when the tube ram is fully retracted.
4. LV81 is energized, activating the tube return cylinder, CL9. CL9 operates a small arm that pushes the specimen tube back into the cassette.
5. The rocker bed resumes rocking and the bar-code reader scans the cassette/position label on the cassette and the specimen tube label a second time. If the bar-code readings do not match the readings taken before aspiration, the Autoloader module stops and the instrument generates an error.

6. If the bar-code readings taken before and after piercing are identical (a positive patient ID), the rocker bed continues to rock and the cassette index mechanism resumes operation, advancing the cassette until the tube available sensor detects the next specimen tube.

   Note: When the fourth tube position in a cassette reaches the Piercing station, if cassettes remain in the loading bay, the next cassette is lowered onto the rocker bed.

When the cassette reaches the unloading bay:

1. The cassette simultaneously activates the cassette position 2 sensor, S3, and the cassette position 3 sensor, S13, which stops and locks the rocker bed in the horizontal position and activates the left elevator. The unload elevator stepper motor, B2, raises and lowers the left elevator.
2. The left elevator ascends, lifting the cassette off the rocker bed, and pushing it above the cassette shelf in the unloading bay.

   Note: When the cassette reaches the cassette shelf in the unloading bay, it pushes the cassette shelf rollers out of the way, into the side walls of the unloading bay.
3. The cassette shelf rollers spring back into position, holding the cassette in the unloading bay for retrieval by the operator, and the left elevator descends.
4. When the load elevator down sensor, S6, senses the elevator is down, if cassettes remain on the rocking bed, the rocker bed and cassette index mechanism resume operation.
5. The Autoloader module continues to process cassettes until the unloading bay is full and the top cassette activates the unload stack full sensor, S11, or until all the cassettes in the loading bay are processed, whichever comes first.

Autoloader Interface Card

Function

The Autoloader Interface card, mounted on the rear of the Autoloader module, interfaces the entire Autoloader module to the Sampler Handler card via connector J9 and a 50-pin ribbon cable in concert with the Rocker Bed Interface card.

The Autoloader Interface card directly interfaces:

- Ten of the 18 sensors associated with the Autoloader module.
  - S0, needle-home sensor
  - S1, needle-forward sensor
  - S4, **STOP** switch
  - S5, door-interlock switch
  - S10, tube-ram sensor
  - S11, unload-stack full sensor
  - S14, tube-forward sensor
  - S15, load-stack empty sensor
  - S16, pierce-position sensor
  - S17, horizontal-position sensor

- The rocker bed motor, M1, that drives the rocker bed rocking mechanism.
- The four solenoids on the Autoloader module.
  - LV81 tube return
  - LV82 pierce needle
  - LV83 tube ram
  - LV84 bed lock

  Note: Of the solenoids interfaced by the Autoloader Interface card, LV82 and LV83 are located directly on the card. LV84 and LV81 are located on the left rear.

For details about these components, refer to Table 2.9-1, Autoloader Module - Motors, Solenoids, and Sensors/ Switches.

Autoloader Interface Card Inputs/Outputs

Inputs:

- Electronic Power Supply
- Sample Handler card
- Rocker Bed Interface card
- Autoloader module sensors
  - S0, needle-home sensor
  - S1, needle-forward sensor
  - S4, **STOP** switch
  - S5, door-interlock switch
  - S10, tube-ram sensor
  - S11, unload-stack full sensor
  - S14, tube-forward sensor
  - S15, load-stack empty sensor
  - S16, pierce-position sensor
  - S17, horizontal-position sensor

Outputs:

- Sample Handler card
- Rocker Bed Interface card
- LV81 tube return
- LV82 pierce needle
- LV83 tube ram
- LV84 bed lock
- M1, rocker bed motor

Rocker Bed Interface Card

Function

The Rocker Bed Interface card, located under the rocker bed, interfaces the following to the Autoloader Interface card via connector J20 and a 30-pin Hi-flex ribbon cable.

- Eight out of the total 18 Autoloader module related sensors.
  - S2, cassette position 1 sensor
  - S3, cassette position 2 sensor
  - S6, unload elevator down sensor
  - S7, tube available sensor
  - S8, load elevator down sensor

  - S9, full cass index rotation sensor
  - S12, cassette position 0 sensor
  - S13, cassette position 3 sensor
- Three of the four motors.
  - B1, load (right) elevator motor
  - B2, unload (left) elevator motor
  - M2, cassette-index motor

For details about these components, refer to Table 2.9-1, Autoloader Module - Motors, Solenoids, and Sensors/ Switches.

Rocker Bed Interface Card Inputs/Outputs

Inputs:

- Electronic Power Supply
- Autoloader Interface card
  - Autoloader module sensors S2, cassette position 1 sensor
  - S3, cassette position 2 sensor
  - S6, unload elevator down sensor
  - S7, tube available sensor
  - S8, load elevator down sensor
  - S9, full cass index rotation sensor
  - S12, cassette position 0 sensor
  - S13, cassette position 3 sensor

Outputs:

- Autoloader Interface card
- B1, load (right) elevator motor
- B2, unload (left) elevator motor
- M2, cassette-index motor

2.10 SAMPLE HANDLER SYSTEM - AUTOSENSOR TEST CARD

The Autosensor Test card monitors the status of every sensor on the Autoloader or Rotary Cap-Pierce module and lights LEDs to indicate the status. Figure 2.10-1 shows which LEDs are lit when the instrument is turned on.

The Autosensor Test card is not a part of the instrument; it is a separate component connected to the Sample Handler card via a ribbon cable. The part number is listed in Table 8.1-21, Tools and Supplies.

Figure 2.10-1 Autosensor Test Card - LEDs Lit Following Power Up

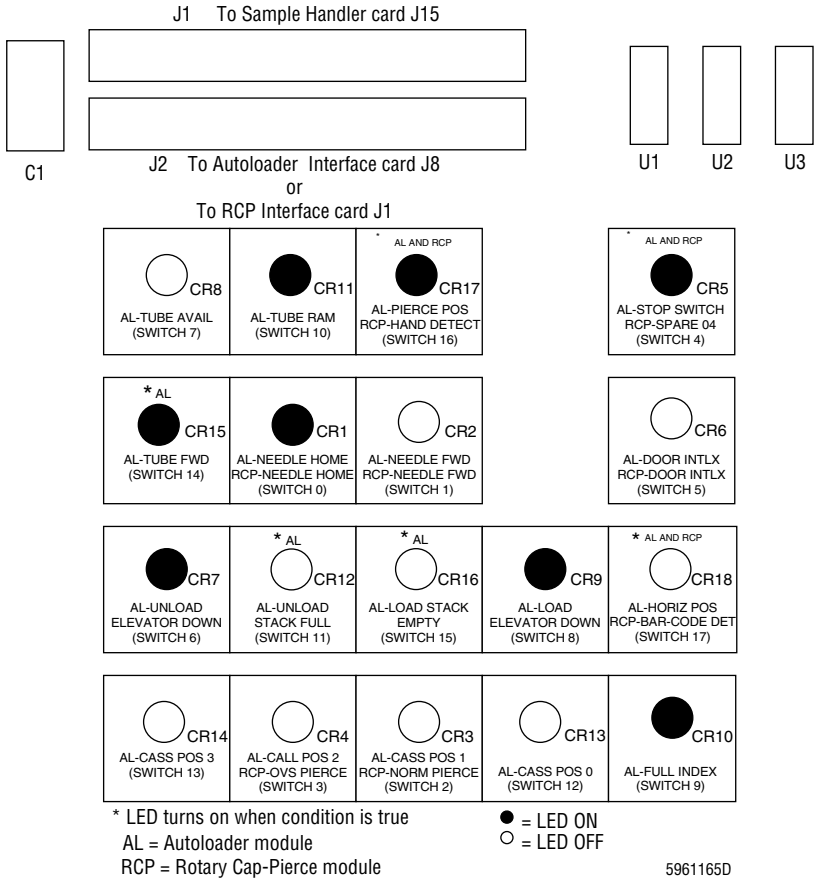

2.11 SAMPLE PROCESSING SYSTEM - DILUTER

Function

The Diluter aspirates, pipets, dilutes, mixes, lyses and senses the blood sample in preparation for analysis. To review these functions, read the Sample Flow section in Chapter 3 of the Reference manual. To better understand how these functions are performed, read this section and study the Pneumatic/Hydraulic Layout, DCN 6320510, in Chapter 6.

Description

The Diluter comprises six modules, accessible either from the front or the right-side of the Main Unit:

- BSV (Sample Valve). For location, refer to Figure 2.1-1, Main Unit with Rotary Cap-Pierce Module, Front View, Main Component Locations, or Figure 2.1-2, Main Unit with Autoloader Module, Front View, Main Component Locations.
- CBC. For location, refer to Figure 2.1-1, Main Unit with Rotary Cap-Pierce Module, Front View, Main Component Locations, or Figure 2.1-2, Main Unit with Autoloader Module, Front View, Main Component Locations.
- Flow-Cell. For location, refer to Figure 2.1-4, Main Unit Right-Side View, Main Component Locations.
- Main Diluter. For location, refer to Figure 2.1-4, Main Unit Right-Side View, Main Component Locations.
- Mixing Chamber. For location, refer to Figure 2.1-4, Main Unit Right-Side View, Main Component Locations.
- Pump. For location, refer to Figure 2.1-1, Main Unit with Rotary Cap-Pierce Module, Front View, Main Component Locations, or Figure 2.1-2, Main Unit with Autoloader Module, Front View, Main Component Locations.

The Diluter modules are interconnected with each other and with the Sample Handler module (Rotary Cap-Pierce or Autoloader) via color-coded tubing through quick disconnects. A label (Figure 2.11-1) on the inside of the Main Unit's right-side door lists the color coding for the instrument tubing.

Three of the Diluter modules, the BSV, CBC, and Pump modules, can be removed from the front of the Diluter, or repositioned, to provide access for maintenance.

Main Components

The main components in the Diluter are identified in Figures A.5-1 through A.5-9 and, with the exception of the solenoids and pinch valves, described in Table A.5-1, Diluter Component Location References and Functions.

Solenoid Valves

The solenoids are mounted directly on pressure and vacuum manifolds in each respective Diluter module. The DILUTER INTERFACE card controls all the solenoids except those located on the Sample Handler modules which are controlled by the Sample Handler card.

A complete list of the solenoids and the devices they control can be found in Table 4.26-1, Solenoid Operations, and inside the right-side door of the Main Unit (Figure 2.11-1).

Figure 2.11-1 Solenoid and Tubing Label

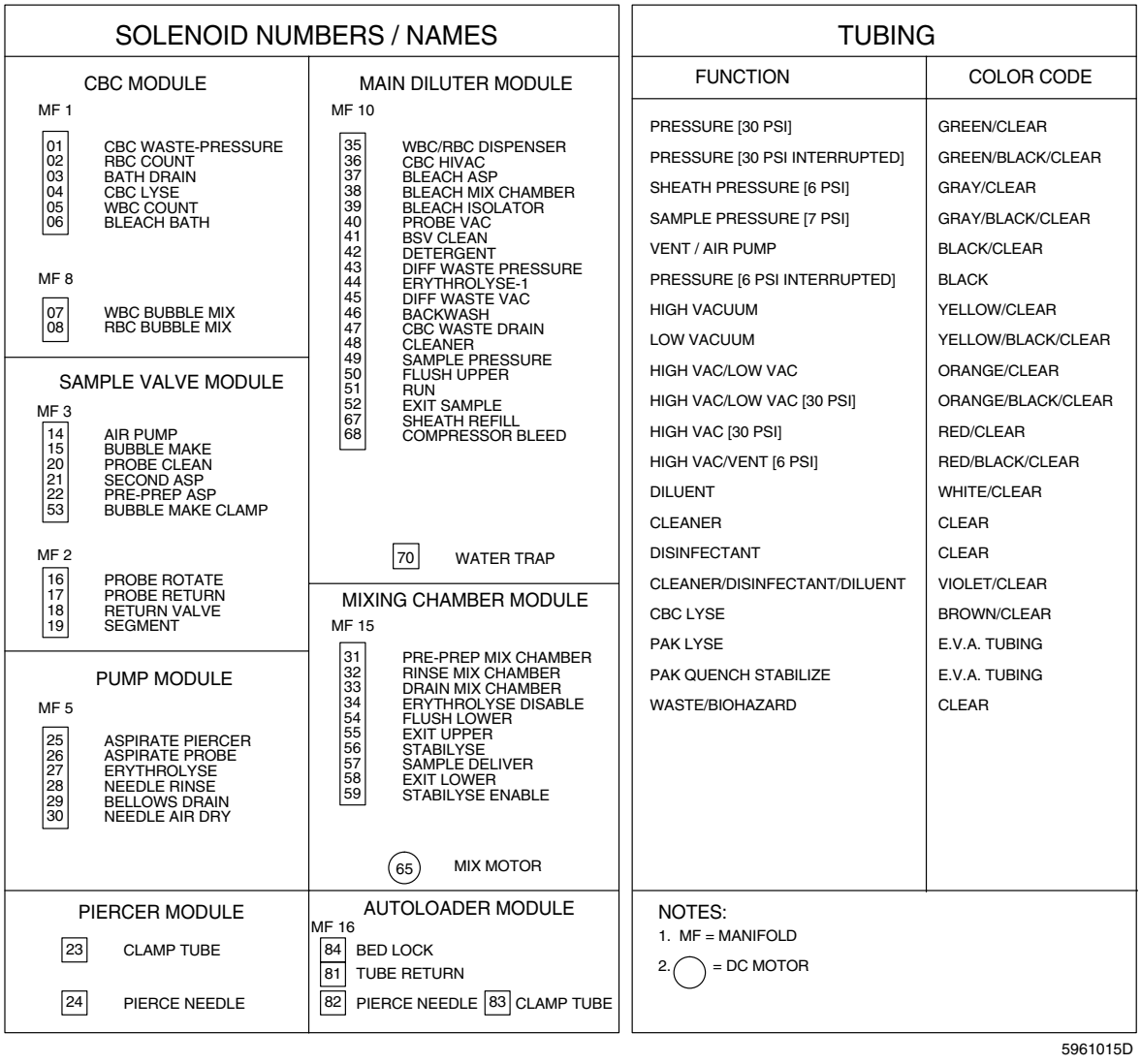

Blood Sampling Valve (BSV)

Blood is aspirated through the BSV, either directly through the aspirator tip in the Secondary mode or indirectly through the piercing needle and front blood/bubble detector in the Primary mode.

The BSV is self-cleaning and consists of three sections (also referred to as “pads”): left, center, and right. The left section rotates, for Primary- and Secondary-mode changes, to direct the blood sample, diluent, and rinse liquids to the appropriate ports in the valve. The center section rotates to segment the blood samples (1.6-µL RBC, 28-µL WBC, and 28-µL diff) into accurately measured amounts. The right section is fixed in position and does not rotate.

An illustration of the BSV sections (Figure 2.11-2) is affixed to the front panel of the Electronic Power Supply. Figure 2.11-3 further illustrates the BSV’s flow paths and wire markers.

Figure 2.11-2 BSV Ports and Wire Markers

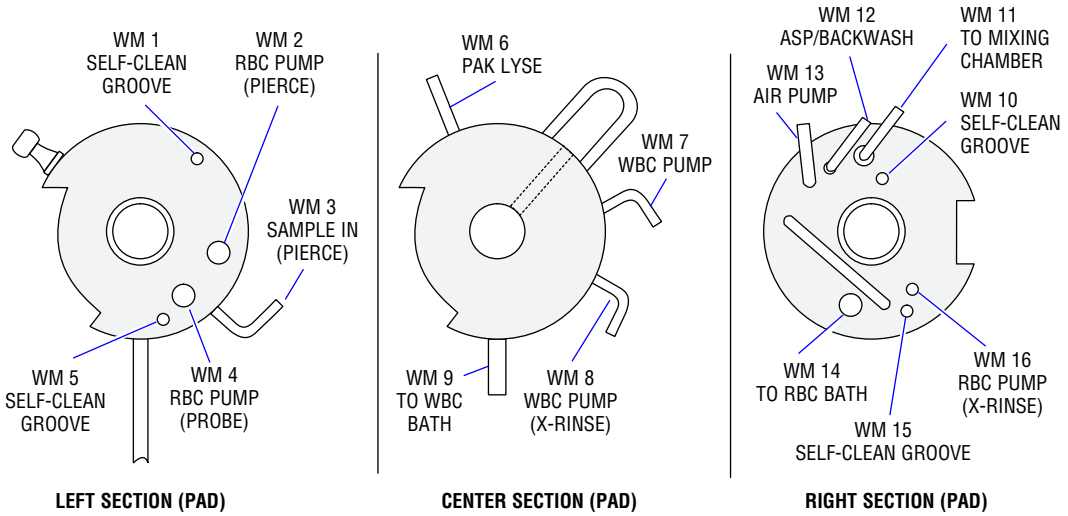

Figure 2.11-3 BSV Flow Paths and Wire Markers

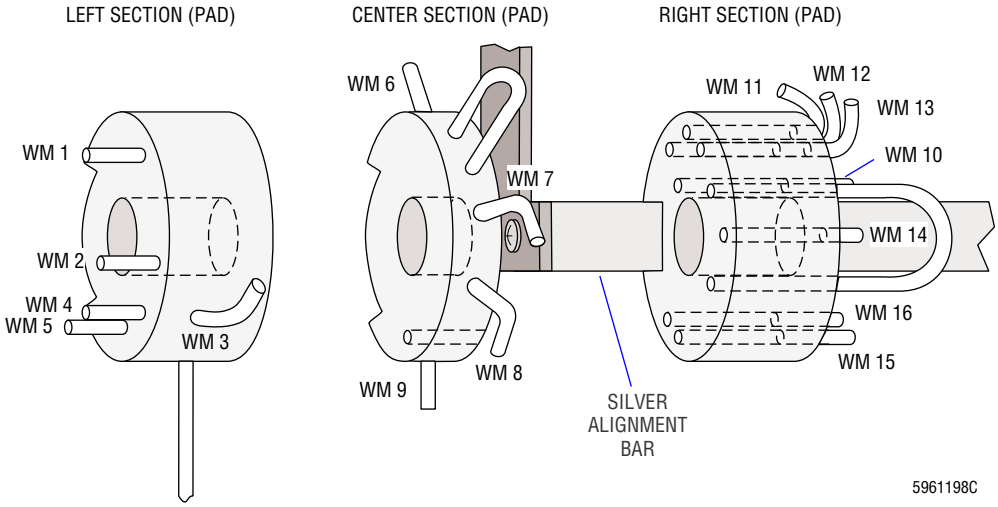

Blood/Bubble Detectors

In the Primary mode, two optical sensors, BD1 and BD2, monitor aspiration of the blood sample through the BSV. See Figure A.5-1, BSV Module, Front View, for the location of the blood/bubble detectors. The instrument checks the blood/bubble detectors six times during aspiration to verify good aspiration.

1. Diluent comparison (front and rear blood/bubble detectors) - At the initiation of aspiration, the instrument checks for diluent (>70% transmittance) at both blood/bubble detectors and compares the readings to ensure the readings are within ±4% of each other.

   If this check fails, the cycle is immediately stopped and the instrument generates a *DILUENT COMPARISON OUT OF LIMITS* error message.

   Note: This is the only blood/bubble detector check that causes the cycle to immediately stop.

2. Air check (front blood/bubble detector) - Next the instrument checks the front blood/bubble detector for the air gap (30% - 50% transmittance). When the air gap is passing the front blood/bubble detector, the rear blood/bubble detector should still be detecting diluent.
3. Blood check (front blood/bubble detector) - After the air gap passes, the instrument checks the front blood/bubble detector for blood (<20% transmittance). This value is stored. The rear blood/bubble detector should still be detecting diluent.

   Note: The front blood/bubble detector should detect blood for the remainder of aspiration.
4. Air check (rear blood/bubble detector) - Next the instrument checks the rear blood/bubble detector for the air gap (30% - 50% transmittance). After the air gap passes the rear blood/bubble detector, the instrument removes the high vacuum from the aspiration pathway.
5. Blood check (rear blood/bubble detector) - After the air gap passes, the instrument checks the rear blood/bubble detector for blood (<20% transmittance) and verifies the blood reached the rear blood/bubble detector within 6.5 seconds. This value is stored.
6. Blood check (front and rear blood/bubble detectors) - At the end of aspiration (the blood stops just beyond the rear blood/bubble detector), the instrument checks for blood (<20% transmittance) at both blood/bubble detectors and compares the values stored in steps 3 and 5 to ensure the values are within ±4% of each other.

If the aspiration fails the checks in steps 2, 3, 5, or 6 fail, the instrument backwashes and pierces the specimen tube a second time. If the second aspiration fails, the cycle is completed and the instrument generates a *PARTIAL ASPIRATION* error message.

The gains for the blood/bubble detectors can be measured and adjusted on the Sample Handler card. See Heading 4.21, BLOOD/BUBBLE DETECTORS GAIN ADJUSTMENT.

Sample Processing

Primary-Mode Aspiration

Operation begins with both the front and center sections of the BSV rotated fully to the clockwise position (with respect to the BSV knob) and pressing against the underside of the silver alignment bar. Refer to Figure 2.11-3.

The 185-µL Primary-mode aspiration pump connects to the right section of the BSV, via the rear blood/bubble detector, at wire marker 12 (WM12). See Figure 2.11-4. The sample line from the piercing needle, through the front blood/bubble detector, connects to the left section of the BSV at WM3.

When the 185-µL Primary-mode aspiration pump is actuated, whole blood is aspirated from the piercing needle toward the front blood/bubble detector, but not directly into the BSV. When the piercing needle retracts from the tube, the aspirated aliquot of blood (185 µL) is pulled by vacuum (applied to the aspiration system by VL10) into fitting WM3 on the BSV. The blood is pulled through the BSV, filling the 1.6-µL RBC segment in the BSV center section, the 28-µL WBC loop in the right section, and the 28-µL diff segment loop in the center section. The blood then continues out the right section at WM12 and through the rear blood/bubble detector toward the 185-µL Primary-mode aspiration pump.

Figure 2.11-4 Primary-Mode Aspiration

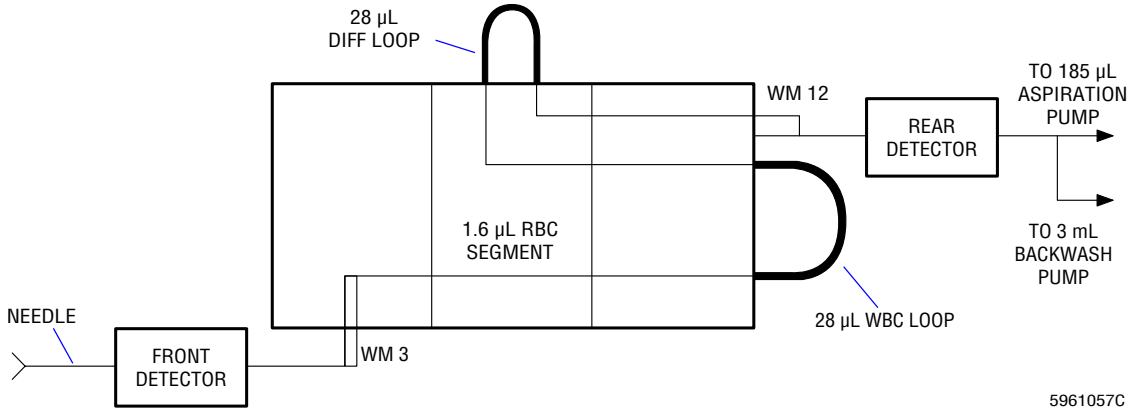

The only portions of the aspirated blood used for testing are those contained in the 1.6-µL RBC segment in the center section of the BSV and the two 28-µL loops, WBC and diff.

WBC/RBC Sample Delivery

When blood is detected by both the front and rear blood/bubble detectors, the BSV center section rotates counterclockwise until it presses against the top side of the silver alignment bar (Figure 2.11-3) to segment off the blood samples contained in the 1.6-µL RBC segment in the center section of the BSV and the two 28-µL loops, WBC and diff. See Figure 2.11-5.

Figure 2.11-5 WBC/RBC Sample Delivery

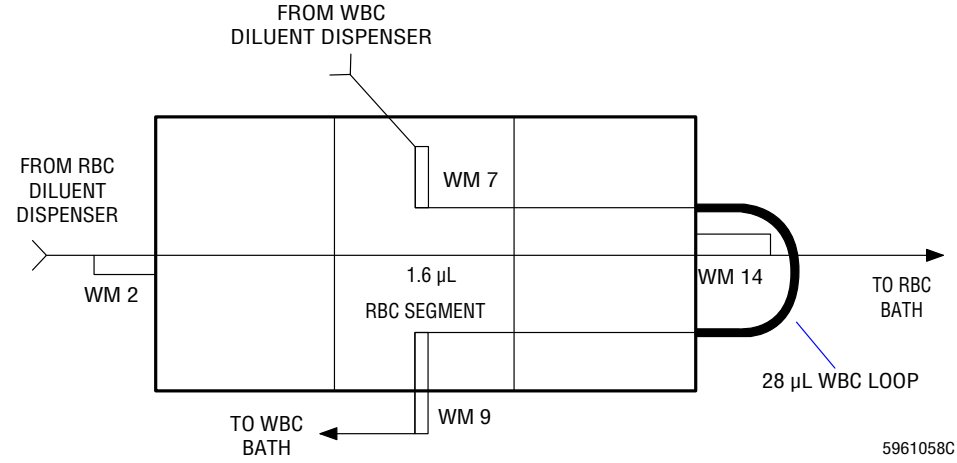

The RBC diluent dispenser connects to the left section of the BSV at fitting WM2. The output to the RBC bath connects to fitting WM14 on the right section of the BSV. The RBC diluent dispenser delivers 10 mL of diluent into WM2, through the 1.6-µL RBC segment in the center section, and outputs the diluent and blood, via WM14, to the RBC bath.

The WBC diluent dispenser connects to the center section of the BSV at fitting WM7. The output to the WBC bath connects to fitting WM9 on the center section. The WBC diluent dispenser delivers 6.0 mL of diluent into WM7, through the 28-µL WBC loop in the right section, and outputs the diluent and blood, via WM9, to the WBC bath.

Diff Segmentation

When the BSV rotates to segment the RBC and WBC dilution segments, it also segments off the sample in the 28-µL diff loop.

The 64-µL air pump connects to the BSV right section at fitting WM13. See Figure 2.11-6. The input line to the mixing chamber connects to the BSV right section at fitting WM11. The input line to the mixing chamber is left primed with Erythrolyse II reagent from the previous cycle.

Figure 2.11-6 Diff Segmentation

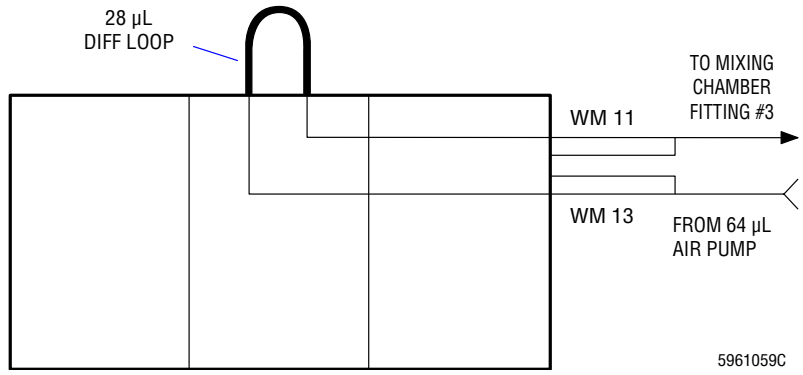

When the 64-µL air pump operates, air enters WM13 pushing the 28 µL of segmented blood, followed by about 6.35 mm (0.25 in.) of air, out of the loop and into the input line to the mixing chamber via WM11. The displacement of Erythrolyse II reagent in the mixing chamber input line [28 µL of blood plus 6.35 mm (0.25 in.) of air] forces about 64 µL of Erythrolyse II reagent into the mixing chamber through fitting number 3 of the mixing chamber.

Diff Segment and Erythrolyse II Reagent Delivery

The BSV center section rotates back to the home position pressing against the underside of the silver alignment bar. See Figure 2.11-3.

The 300-µL (total volume) Erythrolyse II reagent pumps are connected via the Peltier module to the BSV center section at fitting WM6 (Figure 2.11-7). The mixing chamber input line is connected to the BSV right section at fitting WM11. The mixing chamber input line contains the 28-µL diff segment, Erythrolyse II reagent, and about 6.35 mm (0.25 in.) of air.

Figure 2.11-7 Diff Segment and Erythrolyse II Reagent Delivery to Mixing Chamber

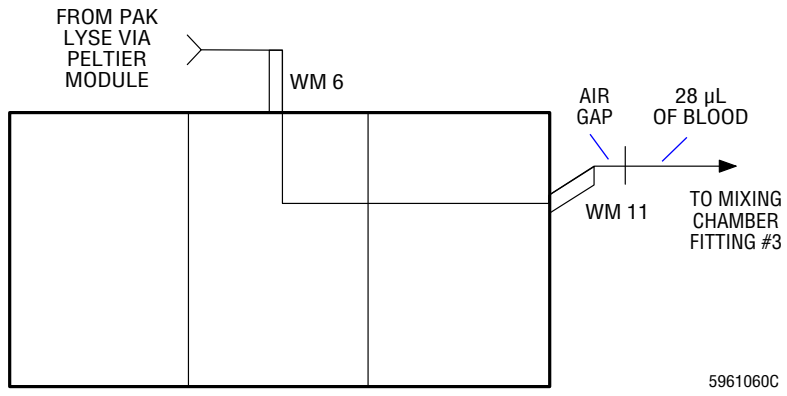

When the Erythrolyse II reagent pumps operate, Erythrolyse II reagent is delivered via the Peltier module into the BSV center section at WM6, and is routed through the BSV to pick up the air and 28-µL segment of blood and deliver them to the mixing chamber. The mixing chamber input line is left primed with Erythrolyse II reagent for the next cycle. In addition, 133 µL of StabiLyse is delivered to the mixing chamber (via fitting #1 on the side of the chamber) where the it is mixed with the blood, Erythrolyse II reagent dilution.

Cross Rinse to the Baths

For a cross rinse to the baths, the BSV center section is in the home position, pressing against the underside of the silver alignment bar. See Figure 2.11-3.

The RBC diluent dispenser is connected to the BSV right section at fitting WM16 (Figure 2.11-8). The WBC bath input line connects to the BSV center section at WM9. The RBC diluent dispenser delivers 10 mL of diluent to fitting WM16, through the BSV center section, exiting to the WBC bath via fitting WM 9.

Figure 2.11-8 Cross Rinse to the Baths

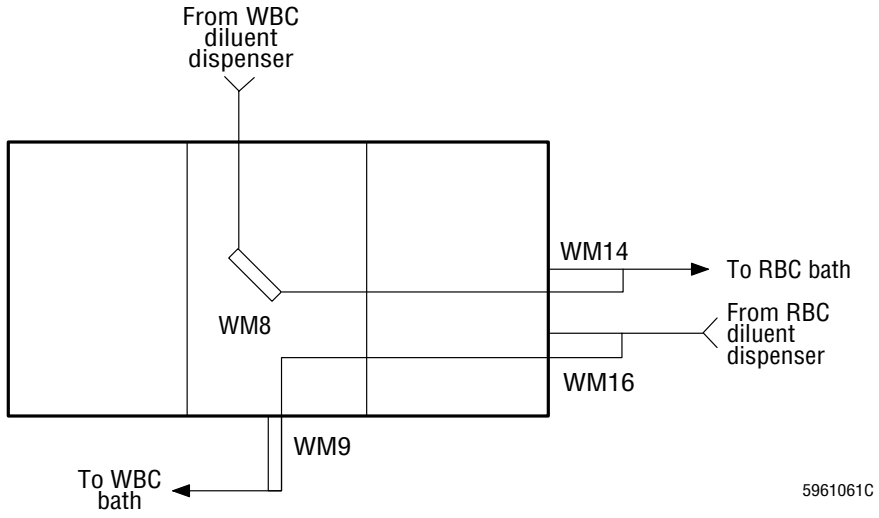

The WBC diluent dispenser is connected to the BSV center section at fitting WM8 (Figure 2.11-8). The RBC bath input line connects to the BSV right section at WM14. The WBC diluent dispenser delivers 6 mL of diluent to fitting WM8, through the BSV right section, exiting to the RBC bath via fitting WM14.

Secondary-Mode Aspiration

For Secondary-mode aspiration, the BSV left section rotates counterclockwise with respect to the BSV knob, pressing against the top of the silver alignment bar. The BSV center section is clockwise (home position), pressing against the underside of the silver alignment bar. See Figure 2.11-3.

The 125-µL Secondary-mode aspiration pump connects to the BSV right section, via the rear blood/bubble detector, at fitting WM12 (see Figure 2.11-9). When the pump is activated, whole blood is aspirated into the BSV left section via the whole blood aspirator tip, through the 1.6-µL RBC segment in the center section, through the 28-µL WBC loop in the right section, back through the 28-µL diff segment loop in the center section, and continues out the right section through fitting WM12 and the rear blood/bubble detector toward the 125-µL aspiration pump.

Figure 2.11-9 Secondary-Mode Aspiration

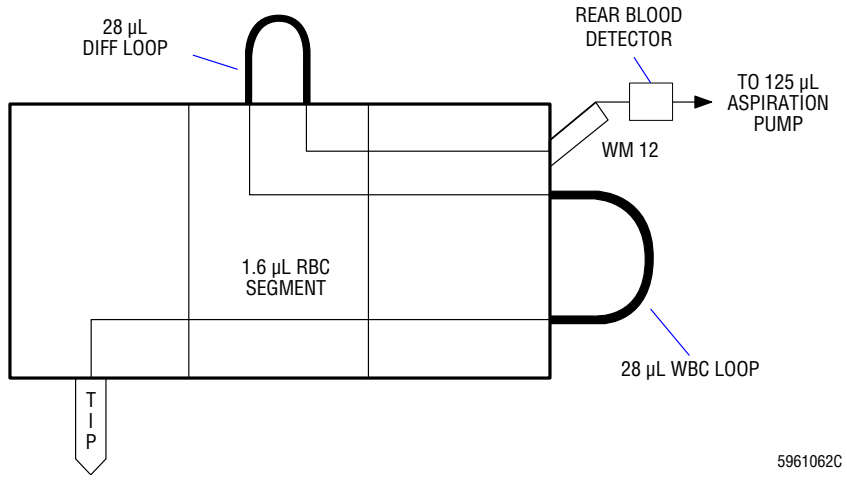

The BSV center section then rotates clockwise to segment off two 28-µL segment and one 1.6-µL segment blood samples for the sample dilutions. The methods of dilution remain the same as performed in the Primary mode with the exception of the RBC diluent and sample delivery.

Note: Blood/bubble detectors are not active during Secondary-mode aspiration.

Pre-Prep/Latex Aspiration

For pre-prep samples or latex aspiration, the BSV left section rotates counterclockwise with respect to the BSV knob, pressing against the top of the silver alignment bar. The BSV center section is clockwise (home position), pressing against the underside of the silver alignment bar. Refer to Figure 2.11-3.

High vacuum from the mixing chamber and VC7 is applied directly to the BSV right section via the rear blood/bubble detector at fitting WM12. See Figure 2.11-10.

When high vacuum is directed to the BSV, pre-prep reticulocyte or latex samples are aspirated into the BSV left section via the aspirator tip, through the 1.6-µL RBC segment in the center section, through the 28-µL WBC loop in the right section, back through the 28-µL diff segment loop in the center section, and continue out the right section through fitting WM12 and the rear blood/bubble detector, eventually ending up in the mixing chamber.

Figure 2.11-10 Pre-Prep Latex Aspiration

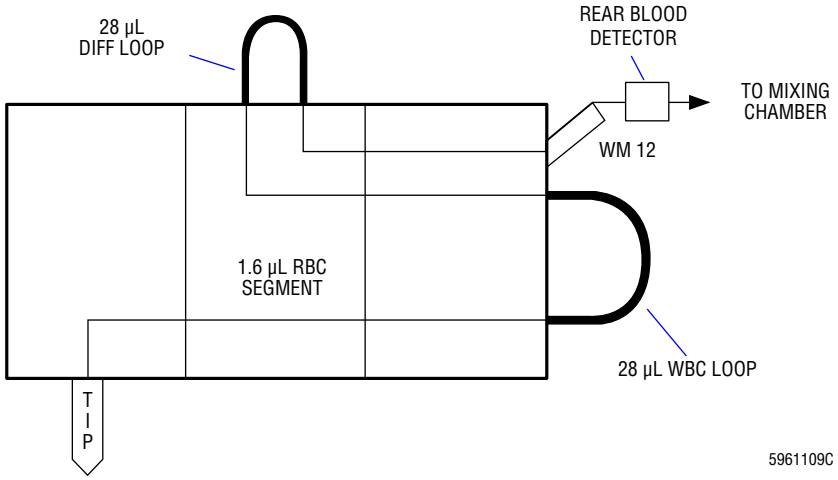

Aspiration is performed in three subcycles:

1. Aspiration (through the BSV to the rear blood/bubble detector).
2. Transport and position (transport sample through the 0.030 in. i.d. pre-prep lines with the first part of the sample to the mixing chamber, then drains).
3. Transport and deliver (the rest of the sample to the mixing chamber).

RBC Sample Delivery, Secondary Mode

The BSV center section rotates to the segment position, pressing against the top of the silver alignment bar. Refer to Figure 2.11-3.

The RBC diluent dispenser is connected to the BSV left section at fitting WM 4 (see Figure 2.11-11). The RBC bath input line connects to the BSV right section at fitting WM14. The RBC diluent dispenser delivers 10 mL of diluent into fitting WM 4, through the 1.6-µL RBC segment in the center section, and out to the RBC bath through fitting WM14.

Figure 2.11-11 Sample Delivery, Secondary-Mode

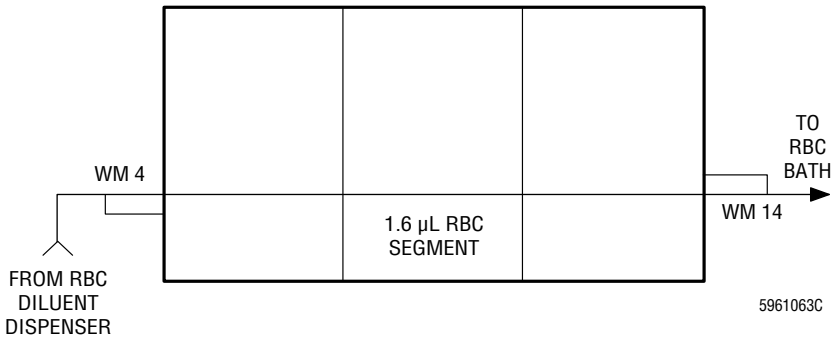

Backwash Functions

The 3-mL backwash pump routes diluent through the entire aspiration path of both the Primary and Secondary modes. The diluent enters the BSV right section at fitting WM12 for both modes. The backwash liquid is collected in the needle bellows in the Primary mode or by the rinse block in the Secondary mode, depending on the position of the left section of the BSV. See Figure 2.11-12.

Figure 2.11-12 Backwash Functions

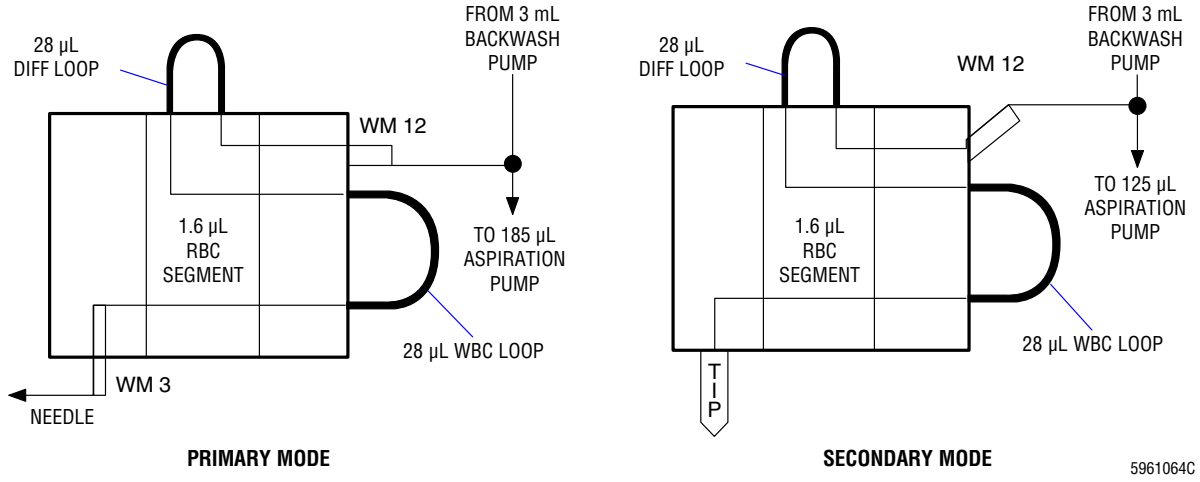

2.12 SAMPLE ANALYSIS SYSTEM - CBC TECHNOLOGY

Summary

The HmX analyzer uses the Coulter Principle to count and measure the RBCs and Plts in the RBC bath and the WBCs in the WBC bath, and measures Hgb photometrically in the WBC bath. Electronic cards in the Analyzer measure and count the pulses produced by the cells, and develop histograms for a graphical representation of size versus number. The remaining CBC parameters (Hct, MCH, MCHC, RDW, Pct, and PDW) are calculated from the directly measured parameters. See Chapter 3 in the customer's Reference manual for a description of the methods used to obtain the CBC parameters.

Applying the Coulter Principle

Sensing Area

Both aperture module and bath assemblies house an external electrode, an aperture, and an internal electrode for applying aperture current across the aperture. See Figure 2.12-1.

Figure 2.12-1 Applying the Coulter Principle

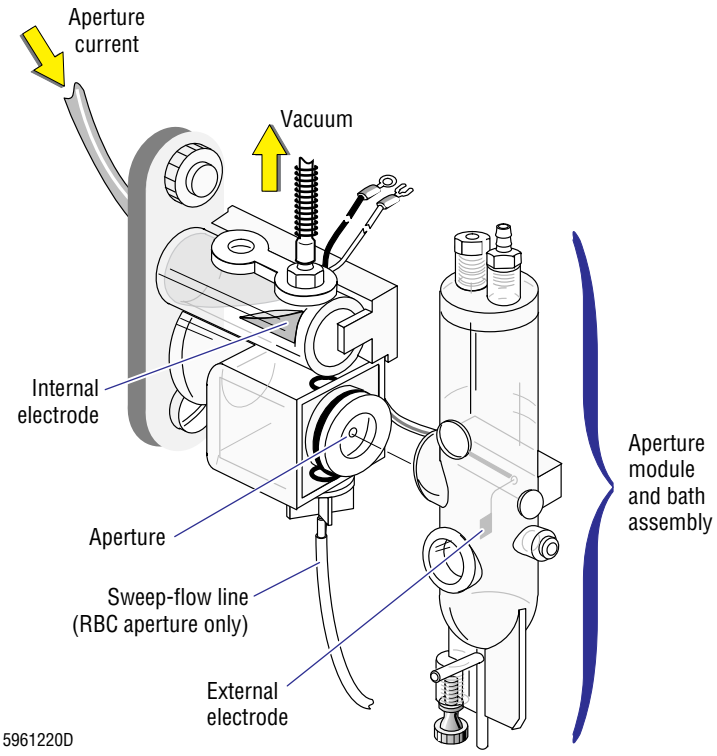

Aperture Current

Coaxial cables connect the internal electrodes to the R/W PREAMP card, which supplies the aperture current to the apertures.

Aperture Vacuum

Regulated low vacuum from the vacuum isolator chambers pulls the dilutions from the baths through the apertures for sensing. In the RBC aperture module and bath assembly, the vacuum also pulls diluent from the sweep-flow line, up behind the RBC aperture, to prevent RBCs from swirling back into the sensing area and being recounted as platelets.

The low vacuum is regulated by the low vacuum regulator, RG1. Refer to Table A.1-13, Pressure and Vacuum Tolerances, for the low vacuum specifications.

Each dilution is counted three times to obtain the final results. For details on the counting times and sequences, see R/W/P PROC Card under Heading 2.4, ELECTRONIC SYSTEM - ANALYZER MODULE.

Analyzing the RBC, WBC, and Plt Data

See R/W PREAMP Card and R/W/P PROC Card under Heading 2.4, ELECTRONIC SYSTEM - ANALYZER MODULE, for a description of the cards used to analyze the RBC, WBC, and Plt data.

Determining the Hgb

When the CBC lytic reagent lyses the RBCs in the WBC bath, it releases the hemoglobin. The hemoglobin reacts with the CBC lytic reagent to form cyanmethemoglobin, a stable pigment. To do the Hgb analysis the instrument takes two Hgb readings, one on clean diluent in the WBC bath for the blank (provided by the cross rinse from the RBC diluent dispenser in the previous cycle), and the other on the WBC dilution.

Incandescent light from the Hgb lamp passes through the WBC bath and then through a filter with a transmission wavelength of 525 nm. A light sensitive diode generates current from the transmitted light, which is converted to a voltage at the op-amp in the Hgb preamp. The higher the Hgb concentration, the darker the dilution, the less light that can pass through the dilution, and the lower the Hgb voltage.

The Hgb preamp routes the voltage to the I/O card where the analog output from the Hgb preamp is converted to a digital value.

2.13 SAMPLE ANALYSIS SYSTEM - VCS TECHNOLOGY

Summary

The HmX analyzer uses the VCS technology to sense and analyze the WBC differential and the reticulocyte population. See Chapter 3 in the customer's Reference manual for a description of the methods used to obtain the WBC differential and reticulocyte parameters.

This section briefly describes the VCS Measurements taken by the HmX analyzer to determine the WBC differential and the reticulocyte population and briefly describes the two circuit cards used in sensing the VCS parameters, the RF Detector Preamp Card, and the LS Preamp 5 Module. For a description of the circuit card used to analyze the VCS measurements, see VCS PROCESSOR Card under Heading 2.4, ELECTRONIC SYSTEM - ANALYZER MODULE.

VCS Measurements

To obtain the WBC differential or reticulocyte data, the HmX analyzer simultaneously measures three parameters on each cell: volume (DC), conductivity (RF) and light scatter (LS); and derives three additional parameters, opacity (OP), rotated light scatter (RLS) and linear light scatter (LLS).

V - Volume (DC)

Volume is measured using the Coulter Principle. Direct current (DC) is applied to two electrodes to measure the impedance across the aperture of the flow cell. As a cell passes through the aperture, the impedance increases, generating a pulse that is directly proportional to the cell volume.

C - Conductivity (RF)

Conductivity is measured by applying a radio-frequency current (RF) to the electrodes. Unlike the DC (low-frequency) current which flows around the cells, this high frequency current flows through the cells. This measurement is a function of the cell volume and internal conductivity, which is related to the physical and chemical contents of the cell.

S - Light Scatter (LS)

Light scatter is measured by passing the cells through a point focused laser beam. As a cell passes through the laser beam in the flow cell, the cell scatters or reflects the light. The scattered light is collected at angles between 10 degrees and 70 degrees, the range known as median angle light scatter (MALS). The light is converted into a voltage pulse proportional to the total amount scattered. These pulses define the shape and surface characteristics of each cell.

Opacity (OP)

Opacity is a transformation of the data derived from the ratio of the RF and DC components obtained during data acquisition. It is calculated for every individual cell measurement or event. Opacity has the effect of removing the size component, yielding a measurement that is more closely related to the internal contents of the cell.

$$OP \approx \frac{RF}{DC}$$

Rotated Light Scatter (RLS)

Rotated light scatter is a transformation of the data derived from the ratio of the log of LS to the DC pulse peak information. It has the effect of removing the size component, yielding a measurement that is more closely related to the internal structure of the cell. RLS is used in the analysis of the diff parameters.

$$RLS \approx \frac{Log_{10}(LS)}{DC}$$

Linear Light Scatter (LLS)

Linear light scatter is a transformation of the data derived from a ratio of the LS and DC components obtained during data acquisition. It has the effect of removing the size component, yielding a measurement that is more closely related to the internal structure of the cell. LLS is used in the analysis of the retic parameters.

$$LLS \approx \frac{LS}{DC}$$

Applying the VCS Technology

The components for sensing the VCS parameters are located in the Flow-Cell module (commonly referred to as the Triple Transducer module or the TTM). Refer to Figure 2.1-4 for the location of the TTM, refer to Figure 2.13-1 for the location of the components within the TTM.

Sensing Area

The flow cell in the TTM contains two electrodes and the aperture where the DC, RF, and LS parameters are sensed for each cell. See Figure 2.13-1.

DC and RF Currents

The electrodes are connected to the RF Detector Preamp card (Figure 2.13-1) which supplies the DC and the RF currents via a coaxial cable.

Laser Light Source

The TTM also houses the laser, a lens block, and a light scatter sensor. See Figure 2.13-1.

Figure 2.13-1 Applying the VCS Technology

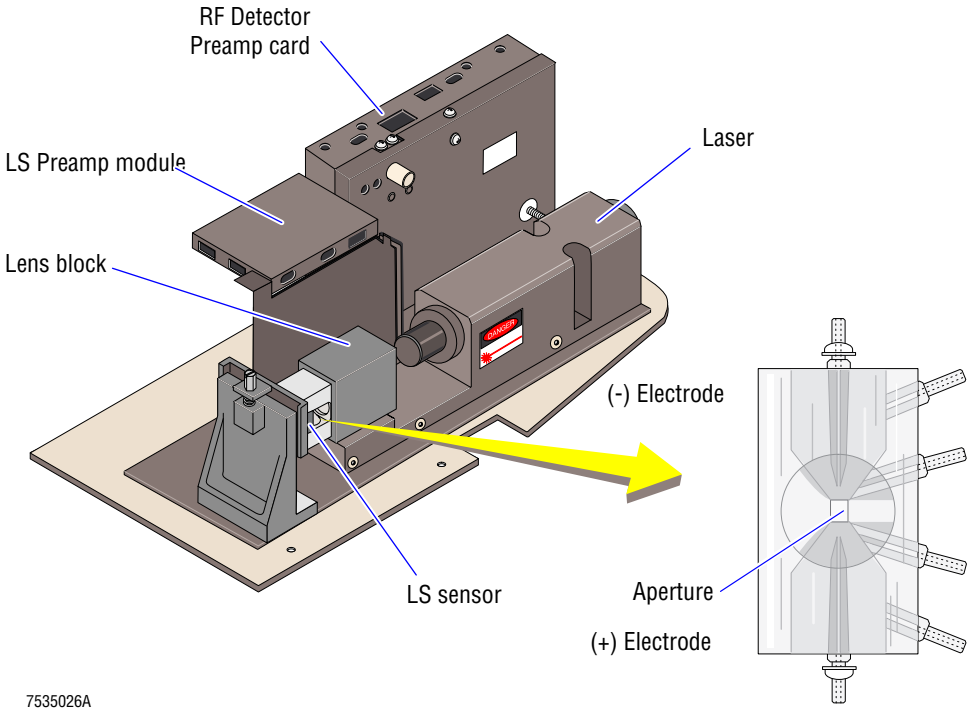

Light from the laser shines through the lens block which focuses the light onto the aperture in the flow cell. See Figure 2.13-2. The light scatter (LS) sensor collects the scattered light from the flow cell.

Figure 2.13-2 Light Scatter Path

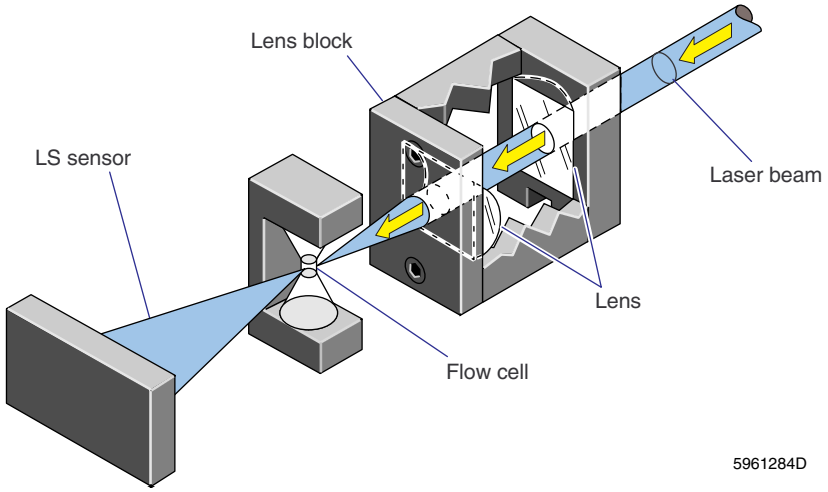

Flow-Cell Hydraulics

Sheath fluid from the sheath tank flows through the flow cell at a fixed pressure to hydrodynamically focus the sample stream through the center of the aperture, one cell at a time. See Figure 2.13-3.

Figure 2.13-3 Hydrodynamically Focused Cells

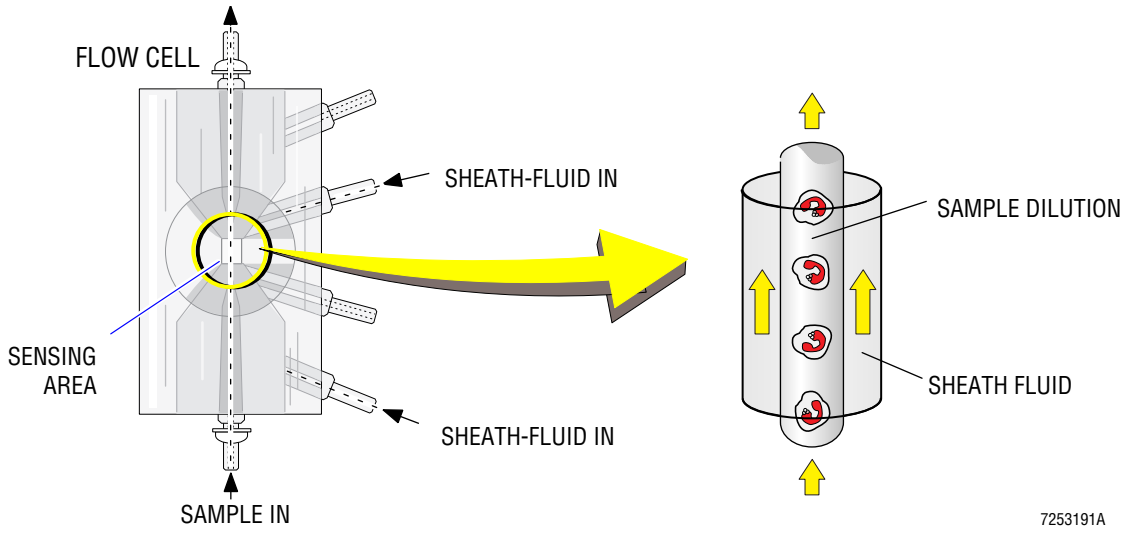

Sample pressure, applied to the mixing chamber, pushes the dilution from the mixing chamber into the sheath fluid stream in the flow cell for sensing. The sample pressure is regulated higher than the sheath pressure to overcome the higher resistance of the sample path.

The sheath fluid pressure is regulated by the sheath pressure regulator, RG3; the sample pressure by the sample pressure regulator, RG4. Refer to Table A.1-13, Pressure and Vacuum Tolerances, for the pressure specifications for the sheath pressure and the diff pressure (the difference between the sheath and sample pressures).

Between samples, the flow cell is rinsed with diluent. See Figure 2.13-4 for ports used and their function during sample flow and rinsing.

Figure 2.13-4 Flow Cell Hydraulics

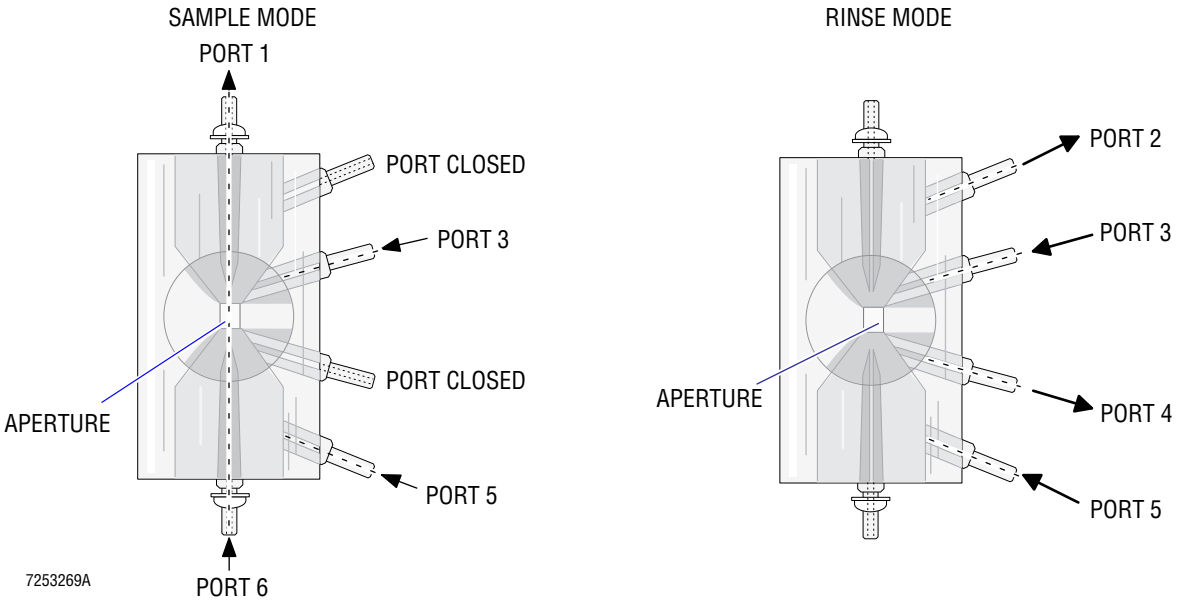

Analyzing the Data

As a sample passes through the aperture of the flow cell, each cell simultaneously:

- Impedes the DC current flow, yielding DC data.
- Impedes the RF current flow, yielding RF data.
- Scatters the laser light, yielding LS data.

See VCS PROCESSOR Card under Heading 2.4, ELECTRONIC SYSTEM - ANALYZER MODULE, for a description of the card used to analyze the data.

Preprocessing

A unique feature of the HmX analyzer is preprocessing. Preprocessing removes invalid volume, conductivity, or scatter pulses during accumulation. As a result, HmX analyzer scatterplots have a higher number of points for evaluation and fewer points in the debris area.

When you activate the Service Disk, you automatically deactivate preprocessing. This allows you to more easily troubleshoot diff or chemistry-related problems. It is important that you use the Service Disk. See Heading 4.2, USING THE SERVICE DISK.

RF Detector Preamp Card

The RF Detector Preamp card is connected directly to the flow cell in the TTM module and is calibrated as a unit with the laser and the flow cell. See Figure 2.13-1 for location.

Function

Figure 2.13-5 illustrates the signal flow within the RF Detector Preamp card.

The RF Detector Preamp card:

- Generates the DC and RF current applied to the flow cell.
- Separates and amplifies the DC and RF signals through its circuitry, and routes these signals to the VCS PROCESSOR card.
- Checks the RF oscillator operation by means of the RF Detect circuit. The RF Detect circuit sends the RF DETECT signal to the DILUTER INTERFACE card.
- Checks for a clogged flow cell and informs the DILUTER INTERFACE card if a clog exists.

Figure 2.13-5 RF Detector Preamp Card Signal Flow

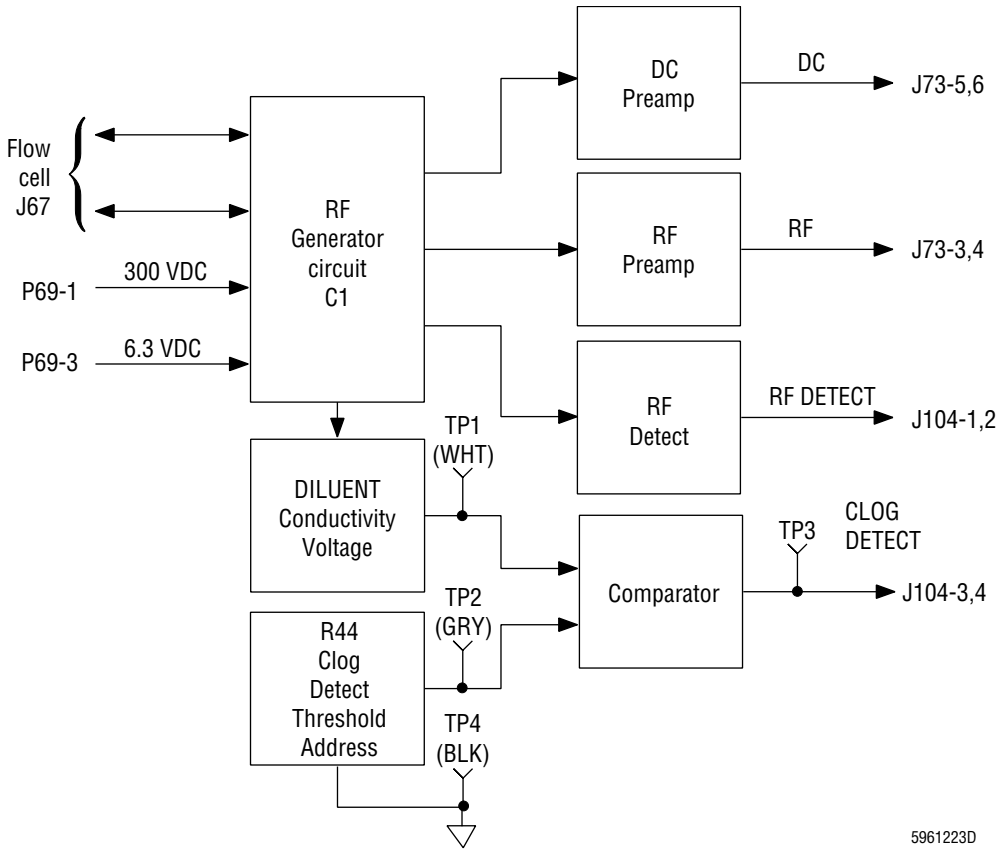

RF Detector Preamp Card Inputs/Outputs

Inputs:

- RF Power Supply
- Flow cell
- DILUTER INTERFACE card

Outputs:

- Flow cell
- VCS PROCESSOR card
- DILUTER INTERFACE card

LS Preamp 5 Module

Primary Function

The primary function of the LS Preamp 5 module is to convert the current signal from the scatter sensor to voltage and amplify it to a level usable by the VCS PROCESSOR card. See Figure 2.13-6.

Figure 2.13-6 LS Preamp 5 Module Block Diagram

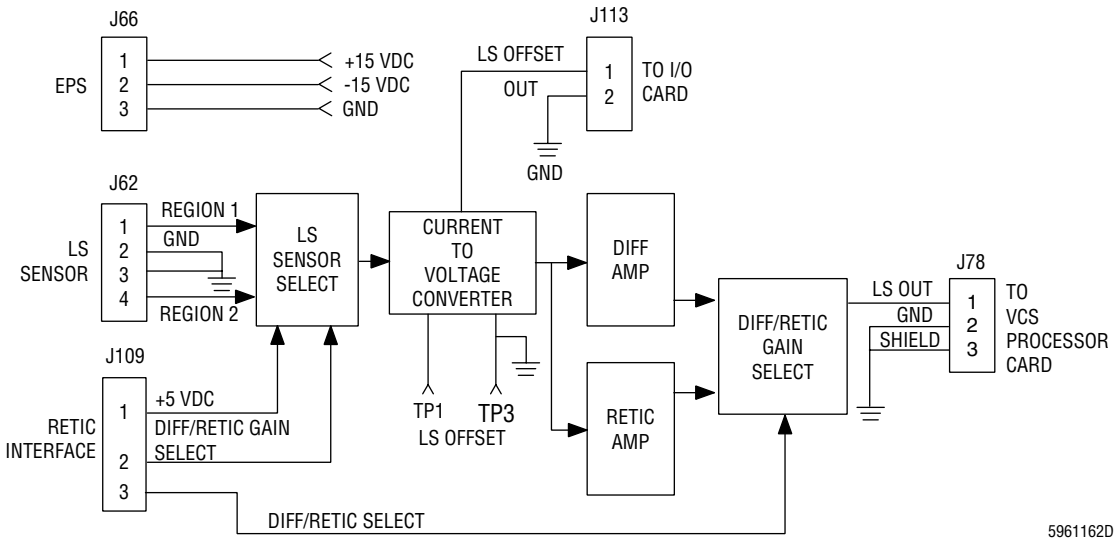

Mode Select

Depending on which mode is selected, Diff or Retic, the output from signals from the scatter sensor requires different amplification to provide appropriate signals to the VCS PROCESSOR card. To accomplish this there are separate amplifiers for the Diff and the Retic modes. The Diff/Retic Gain Select circuitry selects the appropriate amplifier and sends the LS OUT signal to the VCS PROCESSOR card.

The scatter sensor has three regions which are isolated from each other. The Retic mode uses Region 1. The Diff mode uses Regions 1 and 2. Region 3 is not used. Depending upon the mode selected, the LS Sensor Select circuitry selects the appropriate region. See Figure 2.13-7.

Figure 2.13-7 LS Sensor Regions

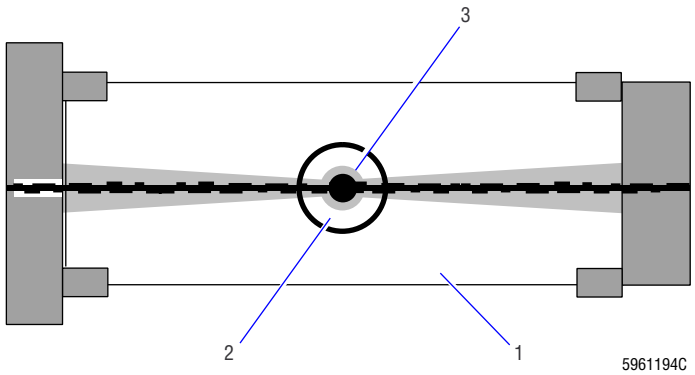

LS Offset Voltage

LS offset voltage is measured across TP1 and TP3 on the LS Preamp module. The ground or negative input to the voltage meter being used must be connected to TP3. The voltage at these test points is directly proportional to the dark/light current.

The LS offset voltage is routed from the LS Preamp module, connector J113, to the I/O card, via the analog backplane. The I/O card monitors the LS offset voltage; the DMS displays the voltage value during a System Test.

LS Preamp 5 Module Inputs/Outputs

Inputs:

- -15 Vdc from Electronic Power Supply
- +15 Vdc from Electronic Power Supply
- +5 Vdc from I/O card (via the Retic Interface card)
- Retic Interface card
- LS sensor

Outputs:

- I/O card
- VCS PROCESSOR card

3 INSTALLATION PROCEDURES, 3.1-1

PART A: INSTRUMENT INSTALLATION

3.1 PREINSTALLATION CHECK, 3.1-1
Customer Training, 3.1-1
Carton Arrival, 3.1-1
Space and Accessibility, 3.1-1
Electrical Input, 3.1-1
Ambient Temperature and Humidity, 3.1-2
Ventilation, 3.1-2
Drainage, 3.1-3
Supplies, 3.1-3

3.2 INITIAL SETUP, 3.2-1

3.3 CONNECTING ASSEMBLIES, 3.3-1
Electronic Cable Connections, 3.3-1
Tubing Connections, 3.3-3

3.4 TESTING/CONFIGURING ASSEMBLIES, 3.4-1
Electronic Power Supply, 3.4-1
Data Management System (DMS), 3.4-1
Software Installation, 3.4-1
Bar-Code Reader Decoder Card Configuration, 3.4-1
Setting Up the Optional Printers, 3.4-1

3.5 INITIAL SYSTEM SETUP, 3.5-1
Setting Up the Institution Information, 3.5-1
Reagent System Setup, 3.5-1
Priming Reagents, 3.5-1
Adjusting the Hemoglobin Blank (Hgb Blank), 3.5-1
Adjusting the Blood/Bubble Detector Gains, 3.5-2

3.6 SYSTEM TESTING, 3.6-1
Tools/Supplies Needed, 3.6-1
Performing System Test and Start Up, 3.6-1
Verifying General Operation of the Primary Mode on Instruments with a Rotary Cap-Pierce Module, 3.6-2
Verifying General Operation of the Primary Mode on Instruments with an Autoloader Module, 3.6-3
Verifying General Operation of the Secondary Mode, 3.6-5

3.7 ADJUSTMENTS AND CALIBRATION, 3.7-1
Entering Calibration Factors, 3.7-1
Measuring the RMS Noise, 3.7-1
Verifying the Diluent and Lytic Reagent Dispense Timing, 3.7-1
Verifying the CBC Latex Calibration, 3.7-1
Adjusting the Clog Detector Circuit, 3.7-1
Measuring the LS Offset Voltage, 3.7-1
Verifying the DC Count and VCS Flow Rate, 3.7-2
Verifying the Diff and Retic Latex Calibration, 3.7-2

Checking Reproducibility and Carryover in the Primary Mode, 3.7-2
Checking Reproducibility and Carryover in the Secondary Mode, 3.7-2
Checking Reproducibility and Carryover for the Retic Parameter, 3.7-3
Making Initial Primary-Mode Calibration Adjustments, 3.7-3
Verifying the Secondary Mode - to - Primary Mode Calibration, 3.7-3
Calibrating the Primary Mode with S-CAL® Calibrator, 3.7-4
Setting Up the Control Files and Running the Controls, 3.7-4
Completing the Installation Paperwork, 3.7-4

3.8 ACCOUNT/INSTRUMENT INFORMATION, 3.8-1
Purpose, 3.8-1
Account Information, 3.8-1
Installation Test Data Checklist, 3.8-1
(✓ = confirmed complete), 3.8-1
Installation Test Data Log Sheets, 3.8-2
A. System Test Data, 3.8-2
B. Startup Results, 3.8-3
C. RMS Noise Check Measurements (CBC), 3.8-4
D. RMS Noise Check Measurements (Diff and Retic), 3.8-4
E. CBC-Mode Latex Calibration, 3.8-5
F. Clog Detector Setup Results, 3.8-6
G. LS Offset Measurements, 3.8-6
H. Five Patient Scatterplots Displaying DC Counts and Times, 3.8-7
I. Diff-Mode Latex Calibration (Five Consecutive Runs), 3.8-8
J. Retic-Mode Latex Calibration (Five Consecutive Runs), 3.8-9
K. Primary-Mode Reproducibility Run, 3.8-10
L. Primary-Mode Carryover Run, 3.8-11
M. Secondary-Mode Reproducibility Run, 3.8-12
N. Secondary-Mode Carryover Run, 3.8-13
O. Retic Mode-to-Mode Carryover Run, 3.8-14
P. Retic Within-Mode Carryover Run, 3.8-15
Q. Primary-Mode Initial Adjustment to 5C Normal Cell Control Cal Factors, 3.8-16
R. Mode-to-Mode Calibration and Verification Runs/Secondary Mode Calibration Factors, 3.8-17
S. S-CAL Calibrator Calibration Batch Tables/Cal Factors, 3.8-18
T. Control Results, 3.8-19

PART B: UPGRADES AND OPTIONS INSTALLATION

3.9 Setting Up the Optional Printers, 3.9-1
Graphic Printer Installation, 3.9-1

3.10 CONFIGURING THE HmX ANALYZER FOR CYANIDE-FREE REAGENTS, 3.10-1
Purpose, 3.10-1
Tools/Supplies Needed, 3.10-1
Reagent Changes, 3.10-1
Pre-Conversion Instrument Verification, 3.10-1
Reagent Conversion, 3.10-2
Post-Conversion Instrument Verification, 3.10-2

ILLUSTRATIONS

3.2-1 HmX Analyzer with Autoloader Module Main Component Layout, 3.2-1
3.2-2 TTM Baseplate Shipping Screws, 3.2-2
3.2-3 Compressor Shipping Pins, 3.2-3
3.2-4 Rocker Bed Lock-Down Screw, 3.2-5

3.3-1 Electronic Cable Connections, 3.3-1
3.3-2 DMS Line Voltage Select Switch, 3.3-2
3.3-3 Reagent and Drain Connections, 3.3-3

TABLES

3.1-1 Fan and Vent Locations, 3.1-2
3.2-1 Deactivator Clip Locations, 3.2-2

CONTENTS

PART A: INSTRUMENT INSTALLATION

3.1 PREINSTALLATION CHECK

ATTENTION: Japanese DMS configurations differ from normal configurations. Refer to the DMS Configuration Listing for STKS™, MAXM™, and HmX Series Systems.

Ensure the following conditions are met before installing the instrument.

Customer Training

Verify that at least one person from the customer laboratory is scheduled to be trained.

Carton Arrival

1. Verify that all cartons arrived (based on customer order).
2. Verify that the cartons are undamaged. If damaged, confirm whether a claim was filed with the carrier.

Space and Accessibility

Determine adequate space and accessibility as follows:

- Verify an island or movable table is available at the installation site to ensure easy access for maintenance and servicing.
- Ensure the installation table can adequately support the HmX analyzer which weighs about 121 kg (266 lb).
- Verify the table is a comfortable work height and has sufficient space for the individual units. Refer to Figure 3.2-1 for a typical layout.
  - The Main Unit is 63.75 cm (25.10 in.) wide x 64.0 cm (25.20 in.) deep.
  - The dimensions of the DMS and Graphic Printer may vary, depending on the models currently used.

    Note: If the customer prefers, the computer base can be installed on the floor to free up counter space.
- Verify a minimum clearance of 30 cm (12 in.) for access to the rear doors, plus sufficient room for work space.
- Verify a minimum clearance of 30 cm (12 in.) on all sides.

Electrical Input

CAUTION Either of these two hazards can occur if you use an extension cord:

- Introduction of electrical interference can occur and cause instrument performance problems (frequent lock ups and resets).
- Overheating, melting, and burning of the extension cord can occur.

Plug the primary power cable directly into the electrical outlet. Position the system close enough to an electrical outlet so you do not need to use an extension cord.

- Verify that the female ac outlet that supplies power to the HmX analyzer Electronic Power Supply is located within 1.8 m (6 ft) of the space designated for the instrument.

- Verify with the house maintenance person that the socket is a three-wire outlet supplying one of the following:
  - 100, 115, or 120 Vac (nominal voltages ±10%) at 20 A, 50/60 Hz, single-phase input power
  - 220, 230, or 240 Vac (nominal voltages ±10%) at 10 A, 50/60 Hz, single-phase input power
- Verify with the house maintenance person that the ground path is capable of carrying the full current of the circuit (that is, a confirmed third-wire earth ground).
- Verify that the circuit is independent and protected. To check for a dedicated line, do one of the following:
  - Ask the house maintenance person.

  ATTENTION: Be sure to ask the customer's permission before turning off any circuit breakers.

  - Plug a unit into the circuit and turn off the circuit breaker at the panel to see if anything else is turned off. If anything else is turned off, the line is not dedicated.
- Verify that the neutral-to-ground potential does not exceed 0.5 Vac.

Ambient Temperature and Humidity

- Verify that the typical ambient temperature at the designated installation site is between 16° and 32°C (60° and 90°F).
- Verify that the humidity of the room is consistently no higher than 95% without condensation.
- If the environment is air conditioned, verify that an additional 5,000 Btu is available to compensate for the heat generated by the system.

Ventilation

Verify that all ventilation intake fans and exhaust fans would be at least 12 cm (5 in.) away from any walls or obstructions that could interfere with the flow of air. The fans are located as indicated in Table 3.1-1

Table 3.1-1 Fan and Vent Locations

Unit	Fan and Vent Locations
Main Unit	1 exhaust fan on rear Analyzer module door and 1 intake fan at the Pneumatic Power Supply. Intake vents all at rear of Main Unit.
Electronic Power Supply	1 exhaust fan on rear of the Electronic Power Supply.
DMS	1 exhaust fan on rear of the computer base.
Monitor (DMS)	Models vary. At installation, check for location of fan and vents.
Graphic Printer (optional)	Models vary. At installation, check for location of fan and vents.

Drainage

- If the waste from the instrument will drain into an open drain instead of a waste container, verify that the drain is chemically resistant and is appropriate for biohazardous waste.
- Verify that the drain or the waste container will be within 3.7 m (12 ft) of the Main Unit.
- Verify that the drain or the waste container is located so that the drain tubing will run in a continuous downward slope to the drain, and the drain will be below the level of the waste fittings.

Supplies

- Ensure the necessary paper supplies, printer paper, bar-code labels, and 10 mm to 16 mm (2 mL to "fat" 7 mL) evacuated blood collection tubes are available.
- Ensure the recommended reagents, calibrators and controls are present and within expiration limits. Refer to Chapter 4 of the customer's Reference manual for a list of recommended reagents, controls, and calibrator.

3.2 INITIAL SETUP

1. Inspect all boxes for damage. Notify shipping of any external damage.
2. Uncrate the Electronic Power Supply module and the Main Unit. Place the Main Unit in its proper location (Figure 3.2-1).

   Note: You will install the Electronic Power Supply module in a later step.
3. Ensure the Electronic Power Supply and Main Unit are intact, with no broken, cracked, or visually defective parts.
4. Uncrate the DMS and the Graphic Printer (optional). Place them in their proper locations (Figure 3.2-1).

   Note: If the customer prefers, the computer base can be installed on the floor to free up counter space.

IMPORTANT Positioning the DMS too close to the right side of the Main Unit can cause electronic interference, which can affect platelet and white blood cell counts. If the customer prefers to have the DMS on the right side of the Main Unit, position the DMS monitor at least 30 cm (1 ft) from the Main Unit.

Figure 3.2-1 HmX Analyzer with Autoloader Module Main Component Layout

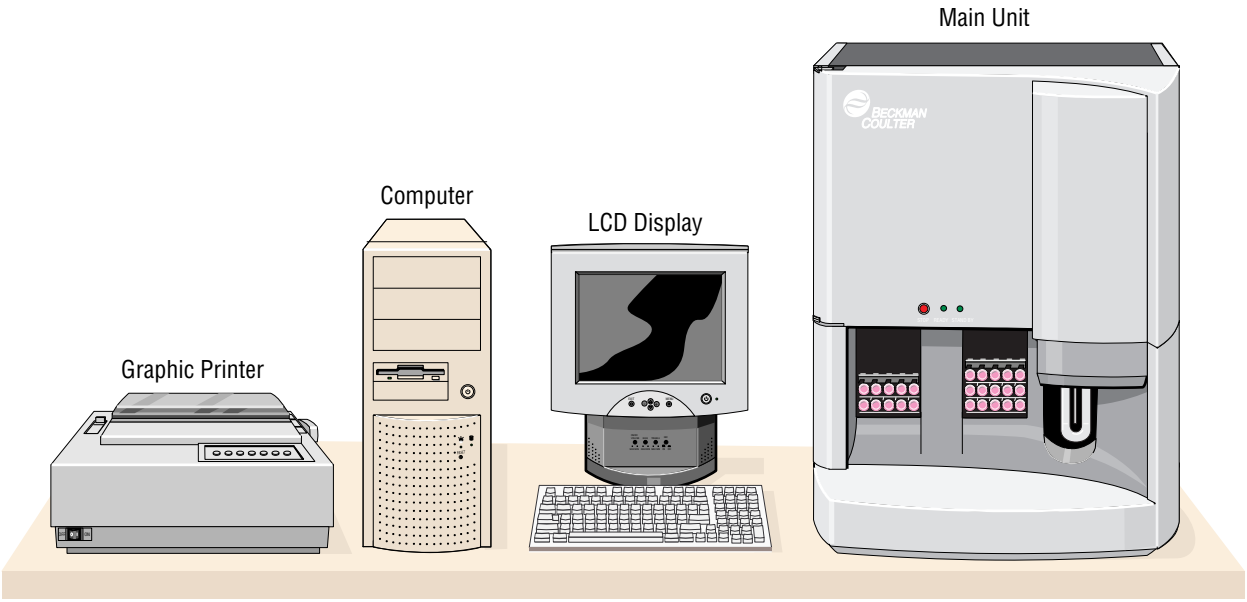

5. Ensure that the DMS and the Printer are intact, with no broken, cracked, or visually defective parts.
6. Open the front, right-side, and right rear doors, covers, and panels of the Main Unit to access the pinch valves and the TTM.
7. Check the tubing in the pinch valves and remove the deactivator clips:
   a. Remove the Main Diluter module support bracket and loosen the two 5/16-in. hex nuts that secure the top of the Main Diluter module.

b. Inspect all the I-beam tubing using a dental mirror to make sure that the tubing is properly installed.

Note: Unfastening the captive screws for the CBC module and placing the module in its mounting hinges makes it easier to check this tubing.

c. Remove all pinch valve deactivator clips (47 single-action valves, 10 triple-action valves).

Note: The pinch valve deactivator clips listed in Table 3.2-1 are not conspicuous. Ensure that they are removed.

Table 3.2-1 Deactivator Clip Locations

Pinch Valve	Located on the…
PV8	Rear of the CBC module. See Figure A.5-4, CBC Module, Rear View.
PV49	Top of the backwash pump bracket. See Figure A.5-6, Main Diluter Module, Right-Side View.
PV61 PV62 PV63 PV64 PV65	Bracket on the inside of the upper rear Diluter door. See Figure A.5-6, Main Diluter Module, Right-Side View.

d. Reinstall the Main Diluter module support bracket, tighten the two 5/16-in. hex nuts that secure the top of the Main Diluter module, and reinstall the CBC module if it is out.

8. Remove the TTM shipping materials:

a. Remove the plastic TTM splash shield, the flow-cell cover, and the laser cover to access the shipping materials.

b. Remove the three shipping screws from the TTM baseplate. See Figure 3.2-2.

Figure 3.2-2 TTM Baseplate Shipping Screws

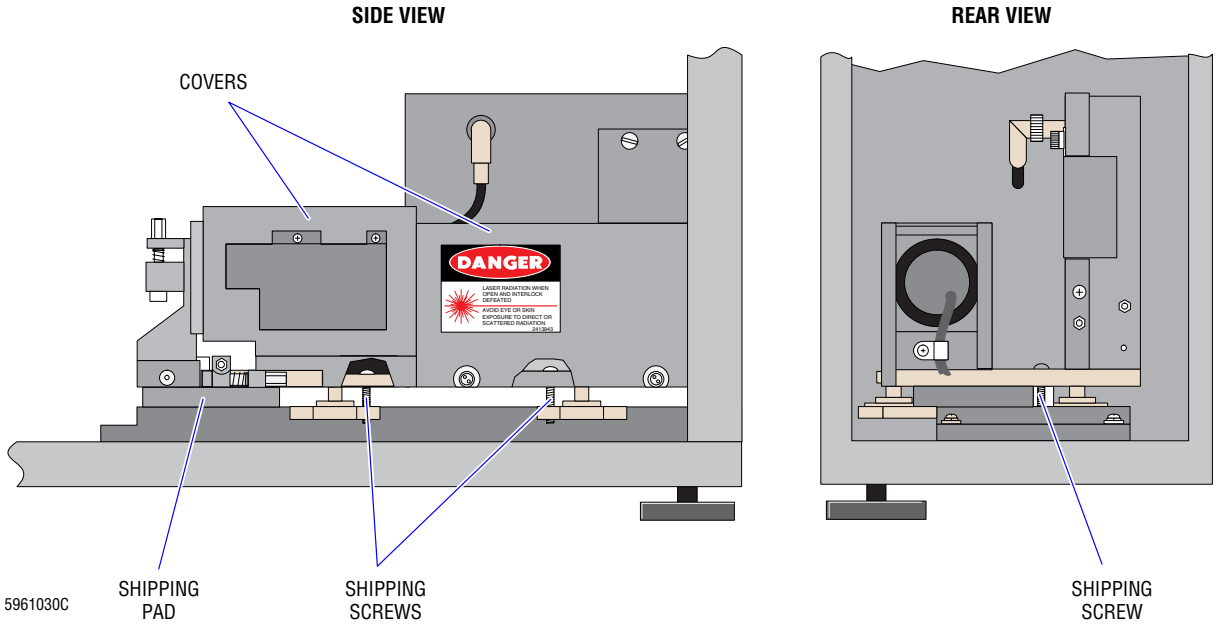

c. Lift up on the TTM baseplate, and pull out the styrofoam shipping pad.

d. Reinstall the flow-cell cover, laser cover, and the TTM splash shield.

9. Close the front, right-side, and right rear doors, covers, and panels of the Main Unit.

10. Remove the shipping pins from the Pneumatic Power Supply, and configure the Pneumatic Power Supply for the correct ac input voltage:

    a. Remove the screws that secure the Pneumatic Power Supply to the rear of the Main Unit.

    b. Pull out the Pneumatic Power Supply.

    c. Remove the two shipping pins from the compressor support posts (Figure 3.2-3).

Figure 3.2-3 Compressor Shipping Pins

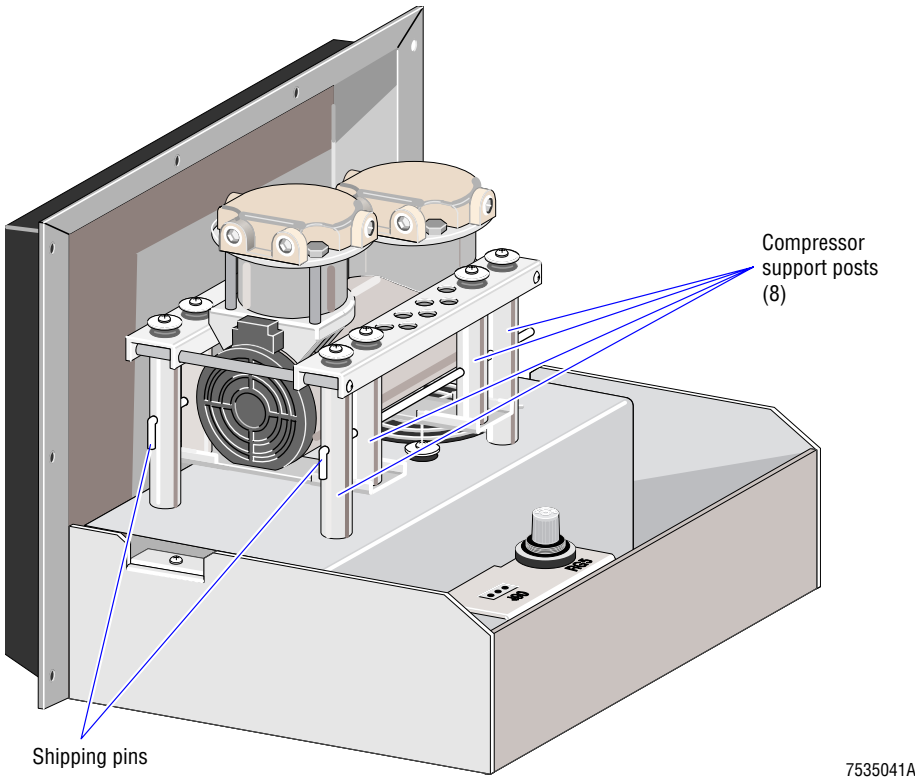

    d. Measure the ac line voltage at the socket into which the unit will be plugged, and record the voltage on the Instrument Reference Form.

    e. Configure the Pneumatic Power Supply Buck-Boost Transformer Terminal card to the appropriate configuration for the ac input line voltage measured in step d. Refer to Table A.3-6, Pneumatic Power Supply Buck-Boost Transformer Terminal Card Jumpers and Connections.

    f. If you changed the configuration of the Pneumatic Power Supply Buck-Boost Transformer Terminal card, replace the UNIT CONFIGURATION label on the left side of the Pneumatic Power Supply with one of the new UNIT CONFIGURATION labels included in the installation kit and mark the new label appropriately.

    g. Slide the Pneumatic Power Supply back into place, and reinstall the screws to secure the Pneumatic Power Supply in position.

11. Unpack the reagent wash bottles (in accessory kit) and leave them with the customer.
12. Remove the shipping materials from the BSV:
    a. Loosen the BSV knob.
    b. Remove all the spacers and the instruction tag from the BSV.
    c. Rinse between the faces of the BSV with distilled water.
    d. Tighten the BSV knob.
13. Inspect, configure, and install the Electronic Power Supply.
    a. Remove the Electronic Power Supply cover.
    b. Verify that all Electronic Power Supply Terminal card (TB) jumpers and connections are configured for the ac input line voltage measured in step 10 d. Refer to Table A.3-3, Electronic Power Supply Terminal Card Jumpers and Connections.
    c. If you changed the configuration of the Electronic Power Supply Terminal card, replace the UNIT CONFIGURATION label on the rear of the Electronic Power Supply and mark the new label appropriately.
    d. Reinstall the Electronic Power Supply cover.
    e. Open the rear Analyzer module doors.

CAUTION The opening for the Electronic Power Supply contains wiring harness connectors which could be jammed behind the Electronic Power Supply. As you slide in the Electronic Power Supply, access the wiring harness connectors from the rear of the Main Unit and move them as needed to avoid jamming.

    f. At the front of the Main Unit, position the Electronic Power Supply on the guide rails in its designated opening. Carefully push and slide the Electronic Power Supply into the opening.
    g. Connect the ground wire (green with yellow stripe) to E8 on the top rear edge of the Electronic Power Supply chassis.

       Note: Push the Electronic Power Supply slightly forward to expose the ground E-Point.
    h. Connect wiring harness plugs P105, P107, P108, P112, P113, P114, P115, and P116 to their respective connectors on the Electronic Power Supply. (P119 is not connected.)
    i. Ensure all the connectors on the rear of the Analyzer module are seated correctly.
    j. Secure the Electronic Power Supply retaining bracket at the front left of the Electronic Power Supply.
14. Configure the Laser Power Supply for the correct ac input voltage:
    a. Remove the cover of the Laser Power Supply, mounted on the inside of the right rear Analyzer module door.
    b. Verify that the Laser Power Supply buck-boost transformer jumpers and wiring connections are configured for the ac input line voltage measured in step 10 d. Refer to Table A.3-5, Laser Power Supply Buck-Boost Transformer Jumpers and Connections.

c. If you changed the configuration of the Laser Power Supply buck-boost transformer, replace the UNIT CONFIGURATION label under the Laser Power Supply and mark the new label appropriately.

d. Reinstall the Laser Power Supply cover.

15. Close all the rear doors of the Main Unit.

16. On instruments with an Autoloader module, remove the shipping screw from the Autoloader module:

a. Ensure that the upper and lower front doors of the Main Unit and the front decorative panel are opened or removed.

b. Using the safety clip, remove the piercing needle cartridge and rest the cartridge on the Pump module.

c. Locate the Autoloader module retaining brackets and loosen the two corresponding Phillips-head screws that secure the brackets and module to the chassis. See Figure 3.2-4.

Figure 3.2-4 Rocker Bed Lock-Down Screw

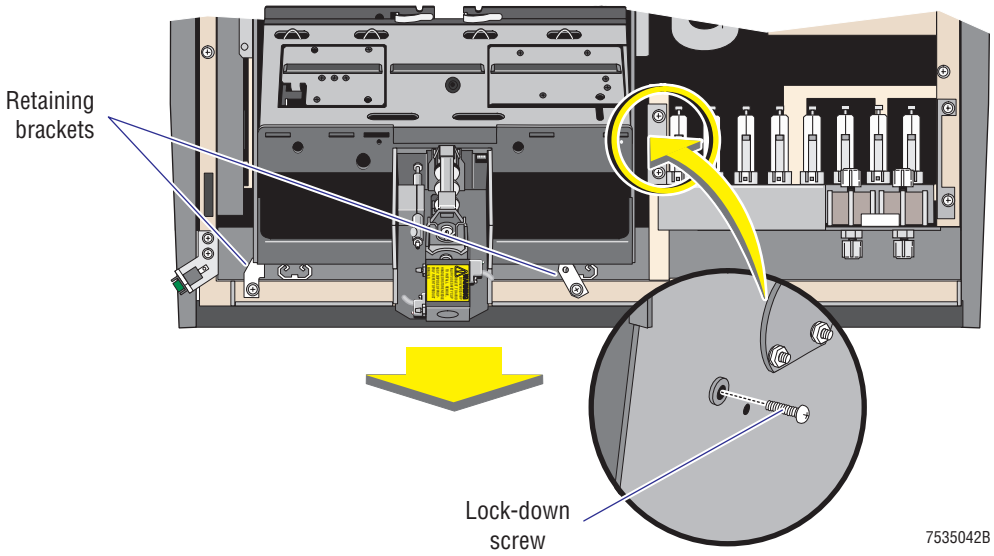

d. Gently pull the Autoloader module forward enough to expose the rocker bed lock-down screw located on the right side of the Autoloader module. See Figure 3.2-4.

e. Remove the Phillips-head lock-down screw to release the rocker bed.

f. Reinstall the Autoloader module, the needle cartridge, and the decorative panel.

17. Close the lower and upper front doors of the Main Unit.

18. Remove the shipping materials from the Graphic Printer. Refer to the Graphic Printer User's Manual.

19. Use the Installation Report Form to report anything that has an adverse effect on the installation or instrument performance.

3.3 CONNECTING ASSEMBLIES

Electronic Cable Connections

IMPORTANT Improperly fastened interconnecting cable mounting hardware, such as screws or spring clips, can induce electronic interference into the system. Ensure that all interconnecting cable mounting hardware is properly fastened at the Main Unit and at the DMS.

1. Verify that all assemblies are turned off and disconnected from any power source.
2. Inspect all the cables, and ensure that the pins are straight and seated properly.
3. Connect the electronic cables as shown in Figure 3.3-1. If installing a second Graphic Printer, see Parallel Card (LPT2) Installation in the DMS Configuration Listing for STKS™, MAXM™, and HmX Series Systems.

   Note: The exact location and type of connection on the back of the device may vary depending on the specific device.

   a. Connect the video signals cable from the monitor to the rear of the DMS computer.

   b. Connect the monitor power cable to the monitor connector on the DMS computer and to the power connector on the video display monitor.

Figure 3.3-1 Electronic Cable Connections

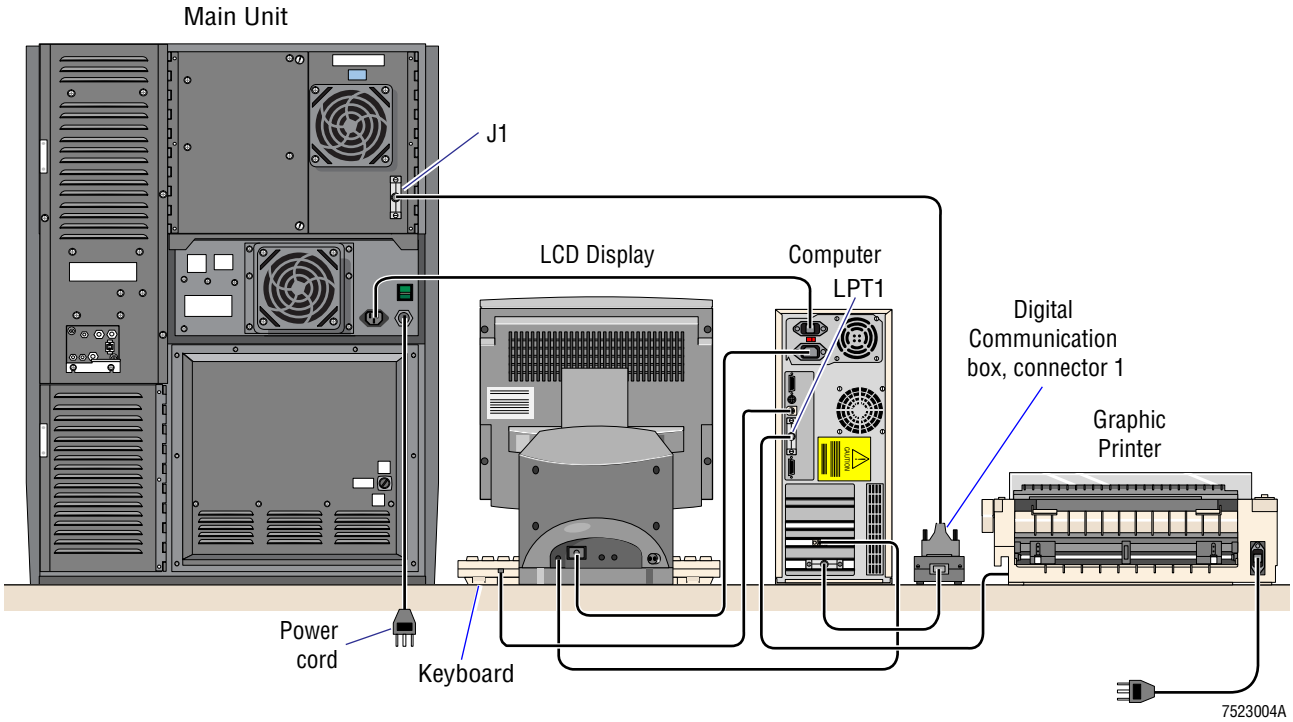

   c. Connect the Graphic Printer signal cable to the parallel port (LPT1) on the DMS computer and to the connector on the Graphic Printer.

   d. Connect the main keyboard cable to the keyboard input connector on the rear of the DMS computer. The auxiliary keyboard adapter cable may be required.

4. Locate the Digital Communication box and connect its cable to the Digiboard jack on the DMS.
5. Locate the P1 cable and connect it to connector 1 on the Digital Communication box and to J1 on the right rear Analyzer door of the Main Unit as shown in Figure 3.3-1.

CAUTION Setting the line voltage select switch incorrectly can cause severe damage to the DMS. Be careful to set the line voltage select switch correctly.

6. Verify that the DMS line voltage select switch (Figure 3.3-2) is set correctly to match the voltage source being used, 115 Vac or 230 Vac.

Figure 3.3-2 DMS Line Voltage Select Switch

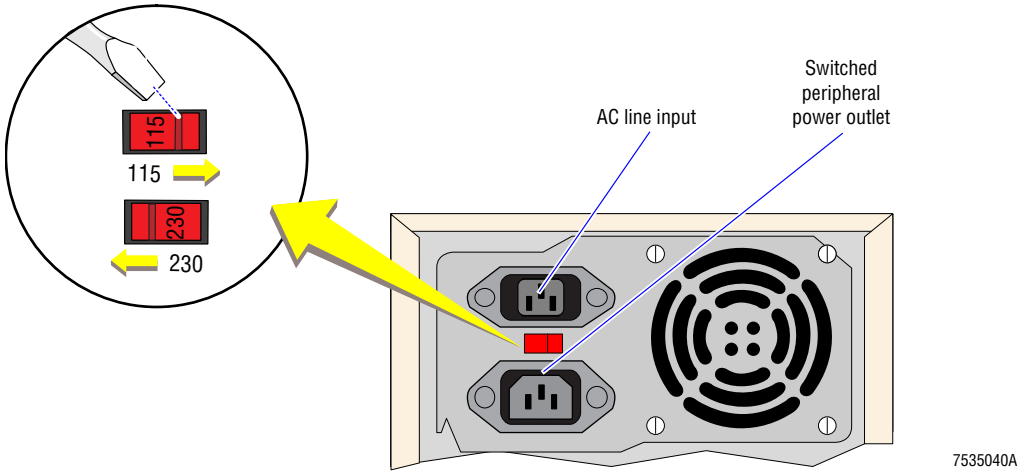

7. Connect the DMS power cable to the ac line input connector on the DMS. Connect the other end to the Main Unit's Electronic Power Supply (COMPUTER AC) socket on the rear of the Electronic Power Supply.
8. Connect the Graphic Printer/Plotter power cable from the Graphic Printer/Plotter to the designated ac wall outlet (Figure 3.3-1).
9. Enable the on-board battery on the 376 CPU card:
   a. Remove the shield from the Analyzer module.
   b. Remove the 376 CPU card from the Analyzer module's card cage.
   c. Install jumpers X2, X3, and X4 on the 376 CPU card.
   d. Reinsert the 376 CPU card into the card cage and secure it properly.
   e. Reinstall the shield on the Analyzer module.
10. Ensure the **POWER** switch on the rear of the Electronic Power Supply is in the OFF position.
11. Connect the ac input cable from the Electronic Power Supply to the designated ac socket at the wall outlet.

Tubing Connections

IMPORTANT Reagent lines can introduce electronic interference into the system. To prevent electronic interference from the reagent lines:

- Use the provided shielded lines for diluent, cleaning agent, CBC lytic reagent, PAK LYSE, PAK PRESERVE, and waste.
- Separate the lines carrying reagents from electrical wires, ensuring the reagent lines do not contact any power cables.

CAUTION Incomplete drainage and overflow into the vacuum system can occur if the waste line is too long, or if the drain or waste container is elevated too high. For correct drainage, ensure:

- The waste line is 3.7 m (12 ft) or less.
- The drain or waste container is below the level of the waste fittings on the Main Unit.

1. Connect the reagent input lines and associated ground wires to the Main Unit as shown in Figure 3.3-3.

   Note: If connecting the waste line to an open drain instead of a waste container, install a bypass jumper on the waste level sensor.

Figure 3.3-3 Reagent and Drain Connections

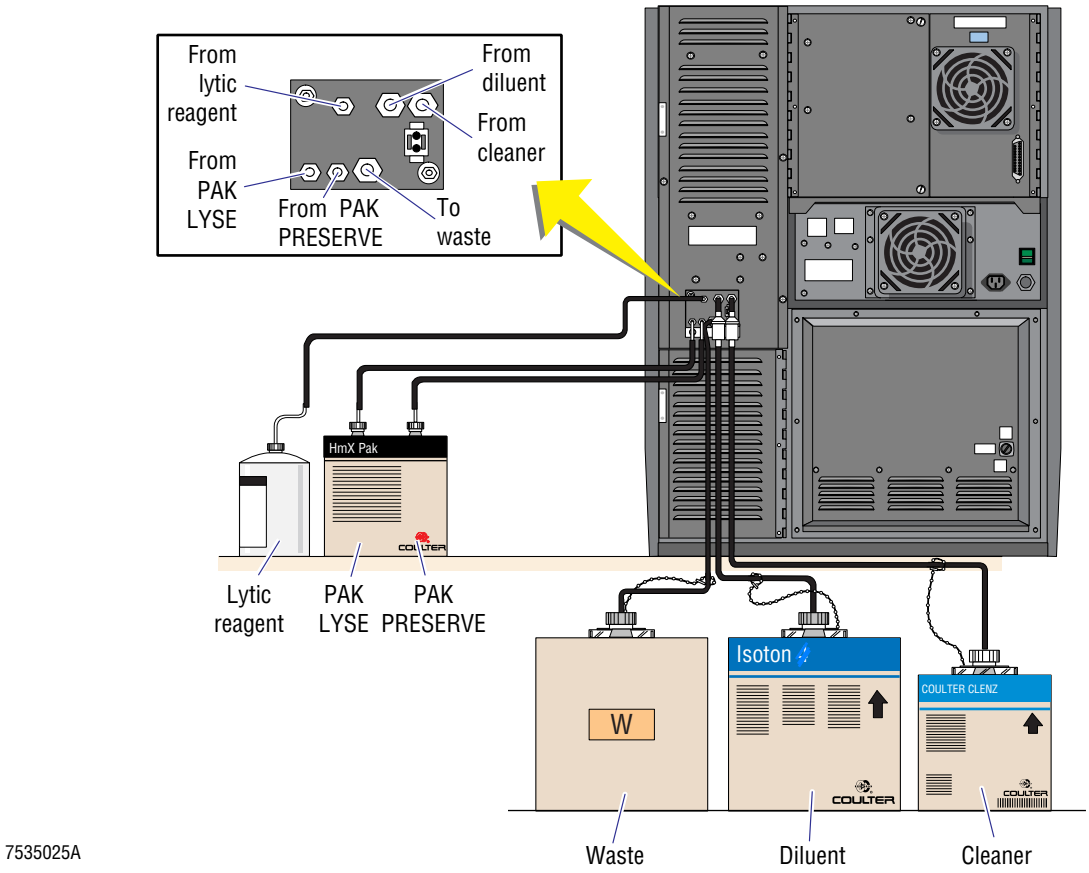

2. Locate the labels for the reagent input lines and apply them to the unattached ends of the lines.

   Note: If you have sufficient labels, label both ends of the reagent input lines.

IMPORTANT Incorrectly installed reagents can affect reagent flow, and consequently instrument results. To ensure proper reagent pickup and delivery, ensure that:

- Each tubing fits on its pickup tube at least 1/4 in. and that it is secured tightly with no leaks or kinks.
- The COULTER HmX PAK and LYSE S® III diff lytic reagent containers are at tabletop level.
- The waste container is clearly labeled WASTE and that the waste pickup tube is correctly installed.

---

3. Install the corresponding pickup tubes for the following reagents:
   - Cleaning agent
   - Diluent
   - CBC Lytic reagent
   - Cleaning agent
   - PAK LYSE
   - PAK PRESERVE
   - Waste (if collecting the waste in a waste container)
4. If using a 500 mL or 1 L container of CBC lytic reagent, place the container in its base holder.
5. Place a clear plastic reagent container neck support bracket on each of the following containers: the diluent, the cleaning agent, and the waste (if collecting the waste in a waste container).

IMPORTANT Allowing the waste line to enter the drain trap might introduce electronic noise into the system, affecting the instrument results. When securing the waste tube in the drain, make sure the end of the tube is not in the trap.

---

6. If you are connecting the waste line to an open drain, mechanically secure the waste tube in the drain so the tube cannot accidentally come out of the drain. This prevents spillage.

3.4 TESTING/CONFIGURING ASSEMBLIES

Electronic Power Supply

1. Turn ON the **POWER** switch on the rear of the Electronic Power Supply.
2. Turn ON (**I**) the Standby/Reset switch.
3. Verify that the fans on the rear of the Electronic Power Supply and on the rear door of the Main Unit are working.

Data Management System (DMS)

1. Turn ON the computer. The computer performs a self-test which takes approximately 15 seconds.
2. If the DMS does not arrive at the C: prompt after it is turned ON, refer to the User's Guide or to the DMS Configuration Listing for STKS™, MAXM™, and HmX Series Systems for the correct setup information.

Software Installation

Refer to the DMS Configuration Listing for STKS™, MAXM™, and HmX Series Systems for software installation.

Bar-Code Reader Decoder Card Configuration

Refer to Heading 4.38, BAR-CODE READER DECODER CARD CONFIGURATION.

Setting Up the Optional Printers

Refer to Heading 3.9, Setting Up the Optional Printers, for Printer installation.

3.5 INITIAL SYSTEM SETUP

Setting Up the Institution Information

1. From the Access screen, select **Main Menu ▸▸ Special Functions ▸▸ Set Up ▸▸ System Set Up ▸▸ Institution**.
2. Enter the appropriate information requested on the screen.
3. Press F10 to save data and escape.

Reagent System Setup

1. From the System Set Up screen, select **Reagents**.
2. Use the numeric keys to enter the correct reagent lot numbers and appropriate expiration dates based on open vial stability requirements for each recommended reagent:
   - ISOTON III® diluent = expiration date on container
   - LYSE S III diff lytic reagent = 60 days for 1 liter and 5 liter
   - LYSE S III diff lytic reagent = 30 days for 500 mL
   - COULTER CLENZ® cleaning agent = 90 days
   - COULTER HmX PAK, PAK LYSE and PAK PRESERVE reagents = 60 days.
3. Press F10 to save data and escape.
4. Press Esc Esc to return to the Special Functions menu.
5. From the Special Functions menu, select **Diagnostics ▸▸ Operator Options ▸▸ Fluidic Test ▸▸ Disable Reagent Sensors**.
6. Ensure all reagent sensors are ON.

   Note: Select **Waste = OFF** if unit is draining directly into a plumbing system.
7. Press Enter to save data and escape.

Priming Reagents

ATTENTION: More than one priming routine may be required to completely prime a new system.

1. From the Main menu, select **Diluter Functions ▸▸ Prime Reagents ▸▸ All** to prime all reagents (<10 minutes).
2. As reagents are priming, verify that each reagent input line fills and that no leaks occur within the Diluter system.
3. If air appears in the respective reagent systems, repeat steps 1 and 2.

Adjusting the Hemoglobin Blank (Hgb Blank)

1. Do the Hemoglobin Lamp Adjustment procedure under Heading 4.27, HEMOGLOBIN PREAMP MODULE REPLACEMENT.
2. Print out (online manual) or copy (printed manual) Heading 3.8, ACCOUNT/INSTRUMENT INFORMATION. This section includes the Installation Test Data Checklist and the Installation Test Data Log Sheets.

3. On the Installation Test Data Checklist, check off Hgb Lamp Adjustment.

   Note: As you complete each test in the installation procedure, check off the procedure on the Installation Test Data Checklist and, when appropriate, attach printouts or record the data on the Installation Test Data Log Sheets.

Adjusting the Blood/Bubble Detector Gains

1. Adjust the blood/bubble detector gains as directed under Heading 4.21, BLOOD/BUBBLE DETECTORS GAIN ADJUSTMENT.
2. On the Installation Test Data Checklist, check off Bubble/Blood Detectors Gain Adjustment.

3.6 SYSTEM TESTING

Tools/Supplies Needed

- ❑ One bar-code labeled specimen tube with clean diluent
- ❑ On instruments with a Rotary Cap-Pierce module, one bar-code labeled specimen tube of whole blood
- ❑ On instruments with an Autoloader module, ten bar-code labeled specimen tubes of whole blood

Performing System Test and Start Up

1. Bypass the lower front door switch with a magnet.
2. Perform a System Test and log the results.
   a. From the Main menu, select **Special Functions** ▸▸ **Diagnostics** ▸▸ **Operator Options** ▸▸ **System Test** to access the System Test Run screen.
   b. Press F3 **RUN** to initiate the System Test and adjust appropriate pressure and/or vacuum regulators as required to ensure correct levels.
   c. Rerun the System Test and verify that all electronic and pneumatic readouts pass.
   d. Print out the System Test data and attach the printout (or record the data) as item A on the Installation Data Log Sheets.
   e. On the Installation Test Data Checklist, check off System Test Data.

ATTENTION: If the upper front door is open, the background results may be out of limits.

3. Perform a Startup cycle and print out the results.
   a. Ensure the upper front door is closed.
   b. From the Main menu, select **Diluter Functions**.
   c. Press S to select **Start Up**, and then press Enter to initiate the cycle.

   ATTENTION: Under certain fail conditions the instrument does not complete the Startup cycle; it stops and displays an error message.

   d. When the Startup cycle is completed, verify all startup results Pass.

   Note: At the end of the Startup cycle, the instrument automatically prints the startup results. You can check the results on the printouts or on the screen. Press F2 to access the Detailed Startup Results screen from the Pass/Fail screen.
   - If all startup results Pass, log the results; go to step 5.
   - If startup results do not Pass, correct the problem; go to step 4.
4. If the startup results did not pass:
   a. Review the startup results to determine the cause of the Fail status.
   b. Locate and correct the problem.
   c. Perform a System Test:
      1) Select **Special Functions** ▸▸ **Diagnostics** ▸▸ **Operator Options** ▸▸ **System Test** to access the System Test Run screen.
      2) Press F3 **RUN** to initiate the System Test.

d. Repeat from step a until the all the system tests Pass.

e. Repeat step 3 above to recheck the Startup cycle.

5. Attach the startup test results printout (or record the data) as item B on the Installation Data Log Sheets.
6. On the Installation Test Data Checklist, check off Startup Test Data.

Verifying General Operation of the Primary Mode on Instruments with a Rotary Cap-Pierce Module

1. From the Main menu, select **Sample Analysis ▸▸ Run Samples**.
2. Ensure DIFF is ON.
3. Press F2 **Start Primary**. The instrument processes the request and displays *S/A 1 °MODE ON* in the lower right corner (System Status field) of the DMS.
4. Cycle a sample of clean diluent and verify the system is free of liquid and air leaks:
   a. Disable the blood/bubble detector (**Main ▸▸ Special Functions ▸▸ Diagnostics ▸▸ Operator Options ▸▸ BSV Tests ▸▸ Blood Detector**).
   b. Hold the tube's label in front of the reader.
   c. As soon as the instrument displays the green light and beeps, place the tube in the entry port of the carousel assembly to initiate the cycle.
   d. Ensure the system is not leaking, paying particular attention to the aspiration path.

ATTENTION: You may need to perform steps 5 and 6 more than once to complete all observations.

5. Cycle a sample of whole blood:
   a. Mix the specimen tube.
   b. Hold the tube's label in front of the reader.
   c. As soon as the instrument displays the green light and beeps, place the tube in the entry port of the carousel assembly to initiate the cycle.

ATTENTION: Step 6 assumes a knowledge of correct instrument operation.

6. Observe the cycles and verify the following:
   - At the bar-code reader and carousel assembly -
     - Bar-code reader turns on when a tube is placed in front of the scanner.
     - Green and red LEDs change state.
     - Carousel assembly advances the tube to the correct piercing position.
     - Carousel assembly unloads the specimen tube into the exit tray.
     - Green and red LEDs change state.
     - No Rotary Cap-Pierce errors occur.
   - At the Piercing Station and the BSV and CBC modules -
     - Needle pierces and retracts correctly.
     - Needle bellows drain completely each time.
     - Needle vent line is rinsed and air-dried properly.

- Whole blood is aspirated correctly with no aspiration errors.
- BSV center section rotates smoothly and completely.
- Aperture baths and waste chamber drain properly.
- Aperture baths fill to appropriate sample levels accompanied by mixing bubbles.
- Lytic reagent is delivered to the WBC bath.
- Count pinch valves open completely providing proper aperture flow rate.
- Aspiration lines are completely backwashed.
- Cross rinse to the baths occurs in correct proportions.

• At the Mixing Chamber module -

- Mixing chamber drains and rinses completely.
- Mixing chamber mixes at the proper rate and times.
- Erythrolyse II reagent and sample delivery appears sufficient.
- StabiLyse reagent delivery appears sufficient.

• At all modules -

- No liquid leaks occur within the system.
- No air leaks occur within the system.

7. If the above checks pass, continue to the section, Verifying General Operation of the Secondary Mode. If not, troubleshoot and correct the problems before continuing.

Verifying General Operation of the Primary Mode on Instruments with an Autoloader Module

1. From the Main menu, select **Sample Analysis ▸▸ Run Samples**.
2. Ensure DIFF is ON.
3. Press F2 **Start Primary**. The instrument processes the request and displays *S/A 1 °MODE ON* in the lower right corner (System Status field) of the DMS.
4. Cycle a sample of clean diluent and verify the system is free of liquid and air leaks:
   a. Disable the blood/bubble detector (**Main ▸▸ Special Functions ▸▸ Diagnostics ▸▸ Operator Options ▸▸ BSV Tests ▸▸ Blood Detector**).
   b. Load a cassette with the tube of diluent, positioning the tube to expose the bar-code label through the top opening in the cassette position.
   c. Place the cassette in the loading bay to initiate the cycle.
   d. Ensure the system is not leaking, paying particular attention to the aspiration path.
5. Load two cassettes with five blood specimen tubes each, positioning the tubes to expose the bar-code labels through the top opening in each cassette position.

ATTENTION: You may need to perform steps 6 and 7 more than once to complete all observations.

6. Place the cassettes in the loading bay to initiate the cycle.

ATTENTION: Step 7 assumes a knowledge of correct instrument operation.

7. Observe the cycles and verify the following:
   - At the rocker bed and cassette mechanism -
     - Right elevator moves up and down, properly placing each cassette onto rocker bed.
     - Rocker bed rocks smoothly and freely.
     - Specimen tubes are properly positioned at the piercing station.
     - Cassettes are transported across the rocker bed completely.
     - Left elevator moves up and down, placing each cassette into unloading bay.
     - Bar-code scanner turns ON and reads each label for ID#1 and Cass/Pos#.
     - No Autoloader transport station errors occur.
   - At the Piercing Station and the BSV and CBC modules -
     - Needle pierces and retracts correctly.
     - Needle bellows drain completely each time.
     - Needle vent line is rinsed and air-dried properly.
     - Whole blood is aspirated correctly with no aspiration errors.
     - BSV center section rotates smoothly and completely.
     - Aperture baths and waste chamber drain properly.
     - Aperture baths fill to appropriate sample levels accompanied by mixing bubbles.
     - Lytic reagent is delivered to the WBC bath.
     - Count pinch valves open completely providing proper aperture flow rate.
     - Aspiration lines are completely backwashed.
     - Cross rinse to the baths occurs in correct proportions.
   - At the Mixing Chamber module -
     - Mixing chamber drains and rinses completely.
     - Mixing chamber mixes at the proper rate and times.
     - Erythrolyse II reagent and sample delivery appears sufficient.
     - StabiLyse reagent delivery appears sufficient.
   - At all modules -
     - No liquid leaks occur within the system.
     - No air leaks occur within the system.
8. If the above checks pass, continue to the section, Verifying General Operation of the Secondary Mode. If not, troubleshoot and correct the problems before continuing.

Verifying General Operation of the Secondary Mode

1. Press F3 F3 to change to the Secondary mode. The instrument processes the request and displays *S/A 2 °MODE ON* in the System Status field.
2. Type in a patient ID number at the DMS keyboard and then press Enter to identify the specimen before processing a sample.

   Note: All specimens must be identified to cycle the instrument.
3. Cycle a sample of clean diluent and verify the system is free of liquid and air leaks:
   a. Uncap the specimen tube of diluent
   b. Immerse the BSV aspirator tip in the tube.
   c. Press the sample bar to begin the cycle.
   d. Ensure the system is not leaking, paying particular attention to the aspiration pathway.

ATTENTION: It may be necessary to repeat step 4 more than once to complete all observations.

4. Cycle a sample of whole blood:
   a. Repeat step 2 to identify the specimen.
   b. Mix and uncap the specimen tube.
   c. Immerse the BSV aspirator tip in the tube.
   d. Press the sample bar to begin the cycle.
5. Observe and verify the following during the Secondary-mode cycle:
   - At the BSV module -
     - Whole blood is properly aspirated into the BSV.
     - BSV center section rotates smoothly and completely.
     - Rinse block moves down and back up the aspirator tip smoothly, completely washing the outside of the tip by the end of the cycle.
     - Rinse block does not leak.
     - Aspirator lines are completely backwashed by the end of the cycle.
     - Aspirator tip does not drip anytime during the cycle.
   - At the CBC module -
     - Aperture baths and waste chamber drain properly.
     - Aperture baths fill to appropriate sample levels accompanied by mixing bubbles.
     - Lytic reagent is delivered to the WBC bath.
     - Count pinch valves open completely providing proper aperture flow rate.
     - Cross rinse to the baths occurs in correct proportions.
   - At the Mixing Chamber module -
     - Mixing chamber drains and rinses completely.
     - Mixing chamber mixes at the proper rate and times.
     - Erythrolyse II reagent and sample delivery appears sufficient.
     - StabiLyse reagent delivery appears sufficient.

- At all modules -
  - No liquid leaks occur within the system.
  - No air leaks occur within the system.

6. If the checks in step 5 pass, check the background count. Go to step 7. If the checks did not pass, troubleshoot and correct the problems before continuing.
7. Check the background count:
   a. Cycle clean diluent in the Secondary-mode.
   b. Ensure the background results are within the limits specified in Table A.1-5, Primary/Secondary-Mode Background Counts.
   c. On the Installation Test Data Checklist, check off Secondary-Mode Background.

3.7 ADJUSTMENTS AND CALIBRATION

Entering Calibration Factors

1. From the Main menu, select **Special Functions ▸▸ Calibration ▸▸ Enter Calibration Factors**.
2. Enter the Primary-mode calibration factors provided in the documents shipped with the instrument.

Measuring the RMS Noise

1. Measure the RMS noise for CBC. Refer to CBC RMS Noise Checks under Heading 4.12, RMS NOISE CHECKS.
2. Record the results in the table under item D on the Installation Test Data Log Sheets.
3. Measure the RMS noise for Diff and Retic. Refer to Diff and Retic RMS Noise Checks, under Heading 4.12, RMS NOISE CHECKS.
4. Record the results in the table under item E on the Installation Test Data Log Sheets.
5. On the Installation Test Data Checklist, check off RMS Noise Measurements.

Verifying the Diluent and Lytic Reagent Dispense Timing

1. Perform the procedure under Heading 4.20, LYTIC REAGENT AND DILUENT DELIVERY TIMING CHECK.
2. On the Installation Test Data Checklist, check off Diluent/Lytic Reagent Dispense Timing.

Verifying the CBC Latex Calibration

1. Perform the CBC Latex Calibration and Verification under Heading 4.4, LATEX CALIBRATION AND VERIFICATION.
2. Print out the RBC and WBC counts, modes and aperture current, and attach the printout as item J on the Installation Test Data Log Sheets.
3. On the Installation Test Data Checklist, check off CBC Latex Calibration.

Adjusting the Clog Detector Circuit

1. Adjust the clog detector circuit as directed in Clog Detector Circuit Adjustment under Heading 4.11, RF DETECTOR PREAMP CARD ADJUSTMENTS.
2. Record the ambient temperature and TP2 voltage as item C on the Installation Test Data Log sheets.
3. On the Installation Test Data Checklist, check off Clog Detector Setup Results.

Measuring the LS Offset Voltage

1. Perform the LS Offset Voltage Check procedure under Heading 4.23, VOLTAGE CHECKS AND ADJUSTMENTS.
2. Record the results in the table under item F on the Installation Test Data Log Sheets.
3. On the Installation Test Data Checklist, check off LS Offset Measurement.

Verifying the DC Count and VCS Flow Rate

1. Adjust the VCS flow rate as directed under Heading 4.10, VCS FLOW-RATE ADJUSTMENT.
2. Print out five patient scatterplots with DC counts and times and attach the printouts as item G on the Installation Test Data Log Sheets.
3. On the Installation Test Data Checklist, check off Flow-Rate/DC Count Verification.

Verifying the Diff and Retic Latex Calibration

1. Perform the Diff and Retic Latex Calibration and Verification procedure under Heading 4.4, LATEX CALIBRATION AND VERIFICATION.
2. Attach the printouts from the five runs in the Diff-Latex Calibration mode as item H on the Installation Data Test Log Sheets.
3. Attach the printouts from the five runs in the Retic-Latex Calibration mode as item I on the Installation Test Data Log Sheets.
4. On the Installation Test Data Checklist, check off Diff Latex Calibration and Retic Latex Calibration.

Checking Reproducibility and Carryover in the Primary Mode

1. Perform the Verifying Reproducibility in the Primary Mode procedure under Heading 4.5, REPRODUCIBILITY CHECKS.
2. Print out the completed reproducibility table and attach it as item K on the Installation Test Data Log Sheets.
3. Perform the Checking Carryover in the Primary Mode procedure under Heading 4.6, CARRYOVER CHECKS.
4. Print out the Primary-mode carryover results and attach the printout as item L on the Installation Test Data Log Sheets.
5. On the Installation Test Data Checklist, check off Primary-Mode Reproducibility and Primary-Mode Carryover.

Checking Reproducibility and Carryover in the Secondary Mode

1. Perform the Verifying Reproducibility in the Secondary Mode procedure under Heading 4.5, REPRODUCIBILITY CHECKS.
2. Print out the completed reproducibility table and attach it as item M on the Installation Test Data Log Sheets.
3. Perform the Checking Carryover in the Secondary Mode procedure under Heading 4.6, CARRYOVER CHECKS.
4. Print out the Secondary-mode carryover results and attach the printout as item N on the Installation Test Data Log Sheets.
5. On the Installation Test Data Checklist, check off Secondary-Mode Reproducibility and Secondary-Mode Carryover.

Checking Reproducibility and Carryover for the Retic Parameter

1. Determine if the customer plans to use the Retic mode and if the reagents for preparing blood samples for retic analysis on the instrument are available in the laboratory.
   - If the customer will use the Retic mode and the reagents are available, go to step 2 to check reproducibility in the Retic mode.
   - It the customer will not use the Retic mode, or if the reagents are not available, go to Making Initial Primary-Mode Calibration Adjustments below.
2. Perform the Verifying Retic % Reproducibility (Sample Analysis) procedure under Heading 4.5, REPRODUCIBILITY CHECKS.
3. Perform the Retic Mode-to-Mode Carryover procedure under Heading 4.6, CARRYOVER CHECKS, Retic Carryover Tests.
4. Attach the printouts of the Retic mode-to-mode carryover results as item O on the Installation Test Data Log Sheets.
5. Perform the Retic Within Mode procedure under Heading 4.6, CARRYOVER CHECKS, Retic Carryover Tests.
6. Attach the printouts of the Retic within mode carryover results as item P on the Installation Test Data Log Sheets.
7. On the Installation Test Data Checklist, check off the Retic-Mode Reproducibility and Retic-Mode Carryover.

Making Initial Primary-Mode Calibration Adjustments

1. Run 5C® normal cell control and verify the results fall within the expected ranges.
   - If the results are within the expected ranges, go to Verifying the Secondary Mode - to - Primary Mode Calibration below.
   - If the results are not within the expected ranges, go to step 2 to perform the initial adjustments to the Primary-mode calibration factors.
2. Perform the procedure under Heading 4.7, INITIAL ADJUSTMENT OF PRIMARY-MODE CALIBRATION FACTORS.
3. Print out the calibration data and attach the printout as item Q on the Installation Test Data Log Sheets.
4. On the Installation Test Data Checklist, check off Initial Calibration Adjustment/Cal Factors.

Verifying the Secondary Mode - to - Primary Mode Calibration

1. Perform the procedure under Heading 4.8, SECONDARY MODE-TO-PRIMARY MODE CALIBRATION.
2. Print out the calibration runs data and attach the printout as item R on the Installation Test Data Log Sheets.
3. Print out the verification runs data and attach the printout as item R on the Installation Test Data Log Sheets.
4. On the Installation Test Data Checklist, check off Mode-to-Mode Calibration/Cal Factors.

Calibrating the Primary Mode with S-CAL® Calibrator

1. Assist the customer in performing the S-CAL calibrator calibration procedure as outlined in the operator's Special Procedures and Troubleshooting Manual.
2. Ensure that a copy of the calibration data is placed into a log book prepared for the instrument and indicate the importance of maintaining an accurate calibration factor record.
3. Print out the calibration batch tables and attach the printouts as item S on the Installation Test Data Log Sheets.
4. On the Installation Test Data Checklist, check off S-CAL Calibrator Batch Tables/Cal Factors.

Setting Up the Control Files and Running the Controls

1. Help the customer set up the control files for 5C cell control, Retic-C™ control, and LATRON™ control as outlined in theControl Setup section of the Operator's Guide and in the Training Guide.
2. Help the customer run the controls, printout the results, and verify the results fall within the expected ranges.
3. Attach the printouts of the control results as item T on the Installation Test Data Log Sheets.
4. On the Installation Test Data Checklist, check off Control Results.

Completing the Installation Paperwork

1. Complete the Instrument Installation Report form.
2. Complete the Account/Instrument Information and Instrument Data Log Sheets and insert them into the Installation section of the Instrument's Certification Book.
3. Using the data obtained during installation, complete the COULTER® HmX Analyzer Instrument Reference Form.

3.8 ACCOUNT/INSTRUMENT INFORMATION

Purpose

Complete all tables and attach required printouts as indicated within the following pages. Obtain the customer's signature upon completion, and place this document in the Installation section of the Instrument's Certification Book.

Account Information

Account Name: _____

Contact: _____

Address: _____

_____

Telephone #: _____

Date of Installation: _____

Installer Name and Employee #: _____

Component	Model and Serial #
Analyzer	
Data Management System (DMS)	
Graphic Printer	

Installation Test Data Checklist

(✓ = confirmed complete)

	Test Data (Item on the Log Sheets)
____	Hgb Lamp Adjustment
____	Blood/Bubble Detector Gain Adjustment
____	System Test Data (Item A)
____	Startup Test Data (Item B)
____	Secondary-Mode Background
____	Primary-Mode Calibration Factor Entry
____	RMS Noise Measurements (Items C, D)
____	Lytic Reagent/Diluent Delivery Timing Check
____	CBC Latex Calibration (Item E)
____	Clog Detector Setup Results (Item F)
____	LS Offset Measurement (Item G)
____	Flow-Rate/DC Count Verification - five patient scatterplots (Item H)

	Test Data (Item on the Log Sheets)
____	Diff Latex Calibration - five runs (Item I)
____	Retic Latex Calibration - five runs (Item J)
____	Primary-Mode Reproducibility (Item K)
____	Primary-Mode Carryover (Item L)
____	Secondary-Mode Reproducibility (Item M)
____	Secondary-Mode Carryover (Item N)
____	Retic-Mode Reproducibility
____	Retic-Mode Carryover (Items 0, P)
____	Initial Calibration Adjustments/Cal Factors (Item Q)
____	Mode-to-Mode Calibration/Cal Factors (Items R)
____	S-CAL® Calibrator Batch Tables/Cal Factors (Item S)
____	Control Results (Item T)

Installation Test Data Log Sheets

Attach printouts or log data in the areas below.

A. System Test Data

B. Startup Results

C. RMS Noise Check Measurements (CBC)

TP*	Measurement
RBC	
WBC	
PLT	

* Read with a true RMS meter while the instrument is in the idle state.

D. RMS Noise Check Measurements (Diff and Retic)

	Diff Mode Measurements		Retic Mode Measurements	
RMS Noise TP	Static	Dynamic	Static	Dynamic
V				
C				
S				

E. CBC-Mode Latex Calibration

F. Clog Detector Setup Results

Ambient temperature: _____°F or _____°C

TP2 = _____Vdc

G. LS Offset Measurements

Test Point Reference	Diff Mode Measurement	Retic Mode Measurement
LS Preamp 5 TP1-TP3		

H. Five Patient Scatterplots Displaying DC Counts and Times

I. Diff-Mode Latex Calibration (Five Consecutive Runs)

J. Retic-Mode Latex Calibration (Five Consecutive Runs)

K. Primary-Mode Reproducibility Run

L. Primary-Mode Carryover Run

M. Secondary-Mode Reproducibility Run

N. Secondary-Mode Carryover Run

O. Retic Mode-to-Mode Carryover Run

P. Retic Within-Mode Carryover Run

Q. Primary-Mode Initial Adjustment to 5C Normal Cell Control Cal Factors

R. Mode-to-Mode Calibration and Verification Runs/Secondary Mode Calibration Factors

S. S-CAL Calibrator Calibration Batch Tables/Cal Factors

T. Control Results

Customer Signature: _____

Coulter Representative Signature: _____

PART B: UPGRADES AND OPTIONS INSTALLATION

3.9 Setting Up the Optional Printers

Graphic Printer Installation

Refer to that printer's user guide for instructions for the Graphic Printer.

3.10 CONFIGURING THE HmX ANALYZER FOR CYANIDE-FREE REAGENTS

Purpose

Use this procedure to convert the HmX analyzer to a cyanide-free reagent such as:

- LYSE S® 4 lytic reagent
- ISOTON® 4 diluent

Note: LYSE S 4 lytic reagent, the CBC lytic reagent without cyanide, must be used in combination with ISOTON 4 diluent only.

Tools/Supplies Needed

- ❑ Clean paper towels
- ❑ 5C cell control, all levels
- ❑ A minimum of 20 whole-blood specimens less than 6 hours old

Reagent Changes

Note: This procedure includes pre-conversion and post-conversion checks.

- The Pre-Conversion Instrument Verification ensures the instrument is calibrated and working correctly **before** it is converted to the new reagent system.
- The Post-Conversion Instrument Verification ensures the instrument is calibrated and working correctly **after** it is converted to the new cyanide-free reagent system.

Pre-Conversion Instrument Verification

1. Do the CBC Latex Calibration and Verification procedure as directed under Heading 4.4, LATEX CALIBRATION AND VERIFICATION. Make any necessary adjustments to the aperture current voltages.
2. Do the Diff and Retic Latex Calibration and Verification procedure as directed under Heading 4.4, LATEX CALIBRATION AND VERIFICATION. Make any necessary adjustments to the RF and DC gains.
3. Do the LYTIC REAGENT AND DILUENT DELIVERY TIMING CHECK as directed under Heading 4.20. Make any necessary modifications.
4. Do the reproducibility checks as directed under Heading 4.5, REPRODUCIBILITY CHECKS. Ensure the results are within acceptable limits.
5. Do the carryover checks as directed under Heading 4.6, CARRYOVER CHECKS. Ensure the results are within acceptable limits.
6. Run controls and verify the results fall within the expected ranges. If the controls do not fall within the expected ranges, have the customer recalibrate the instrument according to their laboratory's protocol. Beckman Coulter recommends the use of S-CAL calibrator.

7. To establish a baseline of instrument performance, run 20 different, fresh (less than 6 hours old), whole-blood specimens using either of the following:
   - The CBC Calibration screen (**Special Functions ▸▸ Calibration ▸▸ CBC Calibration**).
   - The Reproducibility screen (**Special Functions ▸▸ Calibration ▸▸ Reproducibility**).
8. Print out the baseline results.

Reagent Conversion

1. Select the Disable Reagent Sensors screen (**Main Menu ▸▸ Special Functions ▸▸ Diagnostics ▸▸ Operator Options ▸▸ Fluidic Test ▸▸ Disable Reagent Sensors**) and disable the LYSE and DILUENT level sense alarms.
2. Place clean paper towels near the CBC lytic reagent container and the diluent container.
3. Being careful not to touch the reagent ends of the pickup tubes, remove the pickup tubes from the CBC lytic reagent and diluent containers, tapping off any excess reagent into the reagent containers, and place the pickup tubes on the clean paper towels.
4. Remove the CBC lytic reagent from the reagent lines:
   a. From the Main menu of the DMS, select **Diluter Functions ▸▸ Prime Reagents ▸▸ Lyse**.
   b. Press Enter to initiate the Prime Lyse function.
   c. Repeat the Prime Lyse function three more times.
5. Remove the diluent from the reagent lines:
   a. From the Main menu of the DMS, select **Diluter Functions ▸▸ Prime Reagents ▸▸ Diluent**.
   b. Press Enter to initiate the Prime Diluent function.
   c. Repeat the Prime Diluent function three more times.
6. Carefully install the pickup tubes in the CBC lytic reagent and diluent containers of the new, cyanide-free reagent system.
7. Record the new reagent information:
   a. From the Main menu of the DMS, select **Special Functions ▸▸ Setup ▸▸ System Setup ▸▸ Reagents**.
   b. Enter the lot numbers and expirations dates for the CBC lytic reagent and diluent.
   c. Press F10 to save the changes and exit the screen.
8. Repeat step 4 to prime the CBC lytic reagent lines.
9. Repeat step 5 to prime the diluent lines.

Post-Conversion Instrument Verification

1. With the upper front door closed, do a Startup cycle (**Main Menu ▸▸ Diluter Functions ▸▸ Start Up)** and verify all startup results Pass.
2. Do the CBC Latex Calibration and Verification procedure as directed under Heading 4.4, LATEX CALIBRATION AND VERIFICATION.
3. Do the Diff and Retic Latex Calibration and Verification procedure as directed under Heading 4.4, LATEX CALIBRATION AND VERIFICATION.

4. Using either the CBC Calibration or the Reproducibility screen, rerun the same 20 whole-blood specimens you ran in step 7 of the Pre-Conversion Instrument Verification and print out the results.
5. Compare the parameter mean values on the post-conversion printout to the parameter mean values on the baseline (pre-conversion) printout, and verify the values fall within the mode-to-mode limits specified in Table A.1-12, Secondary Mode-to-Primary Mode Comparison Limits.
   - If the post-conversion results are **not** within the limits, troubleshoot the problem and repeat from step 4.
   - If the post-conversion results are within the limits, have the customer determine if the results are acceptable.
6. If the post-conversion results are within the mode-to mode limits but are not acceptable to the customer, have the customer recalibrate the instrument.
7. Instruct the customer to:
   a. Set up control files using the assigned values for the new cyanide-free reagent system.
   b. Run their controls and ensure the results fall within the expected ranges.

4 SERVICE AND REPAIR PROCEDURES, 4.1-1

4.1 GUIDELINES FOR SERVICING THE HmX ANALYZER, 4.1-1
General, 4.1-1
Power Down/Power Up the System, 4.1-2
Purpose, 4.1-2
Power Down, 4.1-2
Power Up, 4.1-2
Reset the System, 4.1-2
Clear the CPU RAM, 4.1-3
Purpose, 4.1-3
Procedure, 4.1-3

4.2 USING THE SERVICE DISK, 4.2-1
Purpose, 4.2-1
Tools/Supplies Needed, 4.2-1
Activating the DMS Service Options, 4.2-1
Deactivating the DMS Service Options, 4.2-2
Using the Service Disk Software on a DMS, 4.2-3
Using the Service Disk Software on a Hard Drive, 4.2-5
Installing the Software, 4.2-5
Running the Software, 4.2-5

4.3 WHOLE BLOOD VERIFICATION - CBC/DIFF, 4.3-1
Purpose, 4.3-1
Tools/Supplies Needed, 4.3-1
Procedure, 4.3-1

4.4 LATEX CALIBRATION AND VERIFICATION, 4.4-1
Purpose, 4.4-1
CBC Latex Calibration and Verification, 4.4-1
Tools/Supplies Needed, 4.4-1
Procedure, 4.4-1
Diff and Retic Latex Calibration and Verification, 4.4-2
Tools/Supplies Needed, 4.4-2
Procedure, 4.4-2

4.5 REPRODUCIBILITY CHECKS, 4.5-1
Purpose, 4.5-1
Verifying Reproducibility in the Primary Mode, 4.5-1
Tools/Supplies Needed, 4.5-1
Procedure, 4.5-1
Verifying Reproducibility in the Secondary Mode, 4.5-2
Tools/Supplies Needed, 4.5-2
Procedure, 4.5-2
Verifying Retic % Reproducibility (Sample Analysis), 4.5-3
Tools/Supplies Needed, 4.5-3
Procedure, 4.5-3

4.6 CARRYOVER CHECKS, 4.6-1
Purpose, 4.6-1
Checking Carryover in the Primary Mode, 4.6-1
Tools/Supplies Needed, 4.6-1
Procedure, 4.6-1
Checking Carryover in the Secondary Mode, 4.6-2
Tools/Supplies Needed, 4.6-2
Procedure, 4.6-2
Retic Carryover Tests, 4.6-2
Tools/Supplies Needed, 4.6-2
General Instructions, 4.6-3
Retic Mode-to-Mode Carryover, 4.6-3
Retic Within Mode, 4.6-3

4.7 INITIAL ADJUSTMENT OF PRIMARY-MODE CALIBRATION FACTORS, 4.7-1
Purpose, 4.7-1
Tools/Supplies Needed, 4.7-1
Procedures, 4.7-1

4.8 SECONDARY MODE-TO-PRIMARY MODE CALIBRATION, 4.8-1
Purpose, 4.8-1
Tools/Supplies Needed, 4.8-1
Procedure, 4.8-1

4.9 VCS OPTIMIZATION, 4.9-1
Purpose, 4.9-1
Tools/Supplies Needed, 4.9-2
A. Preliminary Checks, 4.9-3
B. Count Ratio Check, 4.9-3
C. VCS Flow-Rate Adjustment, 4.9-4
D. Clog Detector Circuit Adjustment, 4.9-4
E. RF Detector Preamp Card C1 Adjustments, 4.9-4
F. DC, RF, and LS Gains Adjustments, 4.9-4
G. DC, RF and LS Noise Measurements, 4.9-4
H. Erythrolyse II and StabiLyse Reagent Pumps Volume Adjustments, 4.9-4
I. Verification, 4.9-4

4.10 VCS FLOW-RATE ADJUSTMENT, 4.10-1
Purpose, 4.10-1
Tools/Supplies Needed, 4.10-1
Sheath Pressure Adjustment, 4.10-1
Sample Pressure Adjustment, 4.10-1
Verification, 4.10-3

4.11 RF DETECTOR PREAMP CARD ADJUSTMENTS, 4.11-1
Purpose, 4.11-1
Clog Detector Circuit Adjustment, 4.11-1
Tools/Supplies Needed, 4.11-1
Procedure, 4.11-1
Verification, 4.11-2

C1 Adjustment, 4.11-2
Tools/Supplies Needed, 4.11-2
Procedure, 4.11-2
Verification, 4.11-3

4.12 RMS NOISE CHECKS, 4.12-1
Purpose, 4.12-1
CBC RMS Noise Checks, 4.12-1
Tools/Supplies Needed, 4.12-1
Procedure, 4.12-1
Diff and Retic RMS Noise Checks, 4.12-1
Tools/Supplies Needed, 4.12-1
Procedure, 4.12-1

4.13 FLOW-CELL CLEANING, 4.13-1
Purpose, 4.13-1
Tools/Supplies Needed, 4.13-1
Procedure, 4.13-1
Verification, 4.13-3

4.14 LENS BLOCK CLEANING, 4.14-1
Purpose, 4.14-1
Tools/Supplies Needed, 4.14-1
Procedure, 4.14-1

4.15 LASER/FLOW CELL ALIGNMENT, 4.15-1
Purpose, 4.15-1
Tools/Supplies Needed, 4.15-2
Flow-Cell Cleaning, 4.15-2
Flow-Cell Z-Axis (Focus) Alignment, 4.15-2
Flow-Cell X- and Y-Axis Plate Alignment, 4.15-4
Flow-Cell Y-Axis Final Alignment, 4.15-6
Verification, 4.15-7

4.16 ERYTHROLYSE™ II AND STABILYSE™ REAGENT PUMPS ADJUSTMENT AND REPLACEMENT, 4.16-1
Erythrolyse II and StabiLyse Reagent Pumps Adjustment, 4.16-1
Purpose, 4.16-1
Tools/Supplies Needed, 4.16-2
Adjusting the Erythrolyse II Reagent Pumps Volume, 4.16-4
Adjusting the StabiLyse Reagent Pump Volume, 4.16-5
Optimizing the Erythrolyse II Reagent Pumps Volume, 4.16-7
Verifying Erythrolyse II and StabiLyse Reagent Pumps Volume Adjustment, 4.16-8
Erythrolyse II Reagent Pumps Replacement, 4.16-8
Erythrolyse II Reagent Pumps Removal, 4.16-8
Erythrolyse II Reagent Pump Installation, 4.16-8

4.17 ASPIRATION PUMP VOLUME ADJUSTMENT, 4.17-1
Tools/Supplies Needed, 4.17-1
Procedure, 4.17-1
Verification, 4.17-2

4.18 CBC LYTIC REAGENT PUMPS VERIFICATION, 4.18-1
Tools/Supplies Needed, 4.18-1
Procedure, 4.18-1
Verification, 4.18-1

4.19 RBC/WBC DILUENT DISPENSERS VOLUME TESTING, 4.19-1
Purpose, 4.19-1
Measuring Diluent by Volume, 4.19-1
Tools/Supplies Needed, 4.19-1
Procedure, 4.19-1
Measuring Diluent by Weight, 4.19-2
Tools/Supplies Needed, 4.19-2
Procedure, 4.19-2
Verification, 4.19-3

4.20 LYTIC REAGENT AND DILUENT DELIVERY TIMING CHECK, 4.20-1
Tools/Supplies Needed, 4.20-1
Purpose, 4.20-1
Procedure, 4.20-1
Verification, 4.20-4

4.21 BLOOD/BUBBLE DETECTORS GAIN ADJUSTMENT, 4.21-1
Tools/Supplies Needed, 4.21-1
Procedure, 4.21-1
Verification, 4.21-2

4.22 ELECTRONIC POWER SUPPLY REPLACEMENT, 4.22-1
Removal, 4.22-1
Installation, 4.22-1

4.23 VOLTAGE CHECKS AND ADJUSTMENTS, 4.23-1
System Voltage Checks, 4.23-1
Using the DMS to Check System Voltages, 4.23-1
Using an External DMM to Check and Adjust System Voltages, 4.23-1
LS Offset Voltage Check, 4.23-3
Tools/Supplies Needed, 4.23-3
Procedure, 4.23-3
System Voltage Checks Verification, 4.23-4

4.24 PNEUMATIC POWER SUPPLY REPLACEMENT, 4.24-1
Removal, 4.24-1
Setup of Pneumatic Power Supply Buck-Boost Transformer, 4.24-1
Installation, 4.24-2

4.25 PRESSURE/VACUUM ADJUSTMENT, 4.25-1
General, 4.25-1

System Test (Pressure/Vacuum Verification), 4.25-1
Pressure Adjustments, 4.25-1
Tools/Supplies Needed, 4.25-1
60-psi Pressure Adjustment, 4.25-1
30-psi Pressure Adjustment, 4.25-3
Sheath Pressure Adjustment, 4.25-3
Initial Sample Pressure Adjustment, 4.25-4
Vacuum Adjustments, 4.25-4
High Vacuum Verification, 4.25-4
Low Vacuum Adjustment, 4.25-5

4.26 SOLENOID VALVES INSPECTION AND REPLACEMENT, 4.26-1
Tools/Supplies Needed, 4.26-1
Solenoid Inspection, 4.26-1
Solenoid Replacement, 4.26-6
Removal, 4.26-6
Installation, 4.26-6
Verification, 4.26-7

4.27 HEMOGLOBIN PREAMP MODULE REPLACEMENT, 4.27-1
Purpose, 4.27-1
Removal, 4.27-1
Installation, 4.27-2
Hemoglobin Lamp Adjustment, 4.27-2
Verification, 4.27-2

4.28 APERTURE MODULE AND BATH ASSEMBLY, 4.28-1
Removal, 4.28-1
Installation, 4.28-2
Verification, 4.28-2

4.29 BSV AND BSV ACTUATOR DISASSEMBLY/REPLACEMENT, 4.29-1
Purpose, 4.29-1
BSV Disassembly/Replacement, 4.29-1
Purpose, 4.29-1
Tools/Supplies Needed, 4.29-1
BSV Removal, 4.29-1
BSV Installation, 4.29-2
BSV Disassembly/Replacement Verification, 4.29-3
BSV Actuator Replacement, 4.29-4
Purpose, 4.29-4
Tools/Supplies Needed, 4.29-4
BSV Actuator Removal, 4.29-4
BSV Actuator Installation, 4.29-6

4.30 CAROUSEL MOTOR REPLACEMENT, 4.30-1
Removal, 4.30-1
Installation, 4.30-1
Verification, 4.30-2

4.31 CODE WHEEL ALIGNMENT, 4.31-1
Tools/Supplies Needed, 4.31-1
Procedure, 4.31-1
Verification, 4.31-3

4.32 NEEDLE REPLACEMENT, 4.32-1
Needle Replacement - HmX Analyzer with Autoloader Module, 4.32-1
Purpose, 4.32-1
Tools/Supplies Needed, 4.32-1
Procedure, 4.32-1
Needle Replacement - HmX Analyzer with Rotary Cap-Pierce Module, 4.32-5
Purpose, 4.32-5
Tools/Supplies Needed, 4.32-5
Procedure, 4.32-5
Verification, 4.32-9

4.33 RINSE BLOCK ADJUSTMENT, 4.33-1
Tools/Supplies Needed, 4.33-1
Procedure, 4.33-1
Verification, 4.33-2

4.34 AUTOLOADER MODULE REMOVAL, 4.34-1
Purpose, 4.34-1
Tools/Supplies Needed, 4.34-1
Removal, 4.34-1
Installation, 4.34-1
Verification, 4.34-2

4.35 ROCKER BED ASSEMBLY REMOVAL, 4.35-1
Purpose, 4.35-1
Tools/Supplies Needed, 4.35-1
Removal, 4.35-1
Installation, 4.35-3
Verification, 4.35-3

4.36 ELEVATOR PLATFORM STEPPER MOTOR REPLACEMENT, 4.36-1
Purpose, 4.36-1
Tools/Supplies Needed, 4.36-1
Removal, 4.36-1
Installation, 4.36-1
Verification, 4.36-1

4.37 TUBE AVAILABLE SENSOR ASSEMBLY REPLACEMENT, 4.37-1
Purpose, 4.37-1
Tools/Supplies Needed, 4.37-1
Removal, 4.37-1
Installation, 4.37-1
Verification, 4.37-1

4.38 BAR-CODE READER DECODER CARD CONFIGURATION, 4.38-1
Purpose, 4.38-1
Tools/Supplies Needed, 4.38-1
Procedure, 4.38-1
Connecting the Bar-Code Communications Cable, 4.38-1
Selecting the Settings for the Microscan™ Bar-Code Reader Decoder Card, 4.38-2
Reassembling the Instrument for Operation, 4.38-4
Verification, 4.38-4

4.39 BAR-CODE SCANNER ALIGNMENT (FOR AUTOLOADER MODULE ONLY), 4.39-1
Purpose, 4.39-1
Tools/Supplies Needed, 4.39-1
Procedure, 4.39-1
Connecting the Bar-Code Communications Cable, 4.39-1
Aligning the Bar-Code Scanner, 4.39-2
Reassembling the Instrument for Operation, 4.39-3
Verification, 4.39-4

4.40 ROCKER BED LINKAGE ADJUSTMENT, 4.40-1
General, 4.40-1
Tools/Supplies Needed, 4.40-2
Procedure, 4.40-2
Verification, 4.40-4

4.41 SPECIMEN TUBE STOPPER PIERCE-PROXIMITY ADJUSTMENT, 4.41-1
General, 4.41-1
Purpose, 4.41-1
Tools/Supplies Needed, 4.41-2
Preliminary Procedure, 4.41-2
Horizontal Pierce-Proximity Adjustments, 4.41-2
Vertical Pierce-Proximity Adjustments, 4.41-2
Verification, 4.41-3

4.42 CASSETTE INDEX MOTOR/INDEX HUB GAP ADJUSTMENT, 4.42-1
Purpose, 4.42-1
Tools/Supplies Needed, 4.42-1
Procedure, 4.42-1
Verification, 4.42-1

4.43 SWITCH/SENSOR CHECK, 4.43-1
Tools/Supplies Needed, 4.43-1
Purpose, 4.43-1
Procedure, 4.43-1

4.44 NEEDLE-POSITION SENSORS ADJUSTMENT, 4.44-1
Purpose, 4.44-1
Procedure, 4.44-1
Verification, 4.44-3

ILLUSTRATIONS

4.1-1 Switches for Clearing the CPU RAM, 4.1-3

4.2-1 Control and Sample Files Available for Viewing, 4.2-4
4.2-2 Single-Parameter Graph, 4.2-5
4.2-3 Parameter vs. Parameter Graph, 4.2-6
4.2-4 Multiple-Parameter Graph, 4.2-6
4.2-5 Flag Graph, 4.2-6
4.2-6 Statistics Window, 4.2-7
4.2-7 Sequential (Points) Mode, 4.2-7
4.2-8 Zoom Mode, 4.2-7
4.2-9 Histogram Mode, 4.2-8
4.2-10 Date-Offset Mode, 4.2-8
4.2-11 Control-File Graph, 4.2-8
4.2-12 Service Disk Utilities Menu Tree, 4.2-9

4.9-1 Optimization Procedure Flow, 4.9-1
4.9-2 Histogram of Good Count Ratio Data, 4.9-3
4.9-3 Histogram of Poor Count Ratio Data, 4.9-3

4.10-1 Unacceptable Flow-Rate Graph, 4.10-2

4.13-1 Wetting Applicator with Alcohol, 4.13-2
4.13-2 Wiping Front of Flow Cell, 4.13-2
4.13-3 Wiping Rear of Flow Cell, 4.13-2

4.15-1 Laser/Flow-Cell Alignment Work Flow, 4.15-1
4.15-2 Flow-Cell Z-Axis Alignment, 4.15-3
4.15-3 Scatter Sensor Laser Diffraction, 4.15-4
4.15-4 Flow-Cell X- and Y-Axis Plate Alignment, 4.15-5
4.15-5 Laser Reflected Light Beam with Special Light Shield Installed, 4.15-6
4.15-6 Laser Diffraction Pattern on Paper, 4.15-7

4.16-1 Match Sheath Fluid to Sample Stream Conductivity, 4.16-1
4.16-2 Effect of Dilution Conductivity on Count Ratio, 4.16-2
4.16-3 Effect of Osmolality on NE DC mean, 4.16-2
4.16-4 Erythrolyse II Reagent and StabiLyse Reagent Pump Optimization Flow Diagram, 4.16-3
4.16-5 Tubing from Mixing Chamber, 4.16-4
4.16-6 Volumetric Cylinder Calibration Marks, 4.16-4
4.16-7 Reading the Meniscus, 4.16-5
4.16-8 Diaphragm Pump Adjustment, 4.16-5
4.16-9 Pump Module Mounting Bracket, 4.16-8

4.17-1 Second Pull (Vacuum), 4.17-1
4.17-2 First Pull (Aspiration Pump)), 4.17-2

4.19-1 Reading a Meniscus, 4.19-2

4.20-1 WBC Bath Tubing Disconnect for Lytic Reagent/Diluent Delivery Timing Hookup, 4.20-2
4.20-2 Test Box and Transducer Hookup for Lytic Reagent/Diluent Timing Procedure, 4.20-2
4.20-3 Digital Pressure Meter Hookup for Lytic Reagent/Diluent Timing Procedure, 4.20-3

4.21-1 Blood/Bubble Detector Test Points and Adjustments, 4.21-1

4.22-1 Electronic Power Supply Connectors, 4.22-1
4.23-1 Electronic Power Supply, Front View, 4.23-2
4.23-2 Electronic Power Supply, Top View with Cover Removed, 4.23-2

4.24-1 Pneumatic Supply Removal, 4.24-1

4.25-1 60-psii Pressure Regulator, 4.25-2

4.27-1 Hgb Preamp Module, 4.27-1

4.28-1 Aperture Module and Bath Assembly, 4.28-1

4.29-1 Retaining the Probe-Slide Mechanism, 4.29-1
4.29-2 Removing the Rinse Block Screw and Washer, 4.29-2
4.29-3 Replacing the Rinse Block, 4.29-3
4.29-4 BSV Actuator (Configuration A) Allen Screw and Cylinder Seals, 4.29-4
4.29-5 BSV Actuator Removal, Configuration A, 4.29-5
4.29-6 BSV Actuator Removal, Configuration B, 4.29-5

4.30-1 Carousel Motor and Carousel Assembly, 4.30-1

4.31-1 Code Wheel, 4.31-2

4.32-1 Cleaning Solution, 4.32-1
4.32-2 Cassette into Loading Bay, 4.32-1
4.32-3 Safety Clip Installation, 4.32-2
4.32-4 Needle Cartridge Removal, 4.32-2
4.32-5 Needle Assembly Location Grooves, 4.32-3
4.32-6 Needle Assembly Tubing, 4.32-3
4.32-7 Needle Tubing Quick Disconnects, 4.32-4
4.32-8 Needle Assembly Installation, 4.32-4
4.32-9 Safety Clip Removal, 4.32-4
4.32-10 Cleaning Solution, 4.32-5
4.32-11 Exit Tray Removal, 4.32-6
4.32-12 Safety Clip Attachment, 4.32-6
4.32-13 Needle Cartridge Removal, 4.32-6
4.32-14 Needle Assembly Location Grooves, 4.32-7
4.32-15 Needle Assembly Tubing, 4.32-7
4.32-16 Needle Tubing Quick Disconnects, 4.32-8
4.32-17 Needle Assembly Installation, 4.32-8
4.32-18 Safety Clip Removal, 4.32-9

4.32-19 Exit Tray Reinstallation, 4.32-9

4.33-1 Rinse Block Adjusting Screw, 4.33-1

4.34-1 Autoloader Module Guide Rails, 4.34-2
4.34-2 Autoloader Module Removal, 4.34-2

4.35-1 Rocker Bed Removal, 4.35-1
4.35-2 Rocker Bed Hardware, 4.35-2

4.39-1 Bar-Code Scanner Adjustment Screws, 4.39-2

4.40-1 Rocker Bed Linkage, 4.40-1
4.40-2 Rocker Bed Linkage Adjustment, 4.40-2

4.41-1 Specimen Tube Stopper Piercing Proximity, 4.41-1
4.42-1 Index Motor/Index Hub Gap Adjustment, 4.42-1

4.44-1 Needle-Position Sensor Orientation on the Needle Drive Cylinder, 4.44-1

TABLES

4.2-1 DMS Service Menu Options, 4.2-2
4.2-2 Service Disk Utilities Selections/Explanations, 4.2-10

4.9-1 Purpose of VCS Optimization Procedures, 4.9-2

4.26-1 Solenoid Operations, 4.26-1

4.38-1 Moving Around the Microscan Screens, 4.38-3

4.43-1 Switch/Sensor Checks on the HmX Analyzer with Autoloader Module, 4.43-1
4.43-2 Switch/Sensor Checks on the HmX Analyzer with Rotary Cap-Pierce Module, 4.43-5

4.1 GUIDELINES FOR SERVICING THE HmX ANALYZER

General

1. Review and heed the general safety warnings and cautions listed under Heading 1.2, SAFETY PRECAUTIONS.
2. Ensure there is adequate space to work and to access the instrument components safely.

   Note: You can remove the CBC, BSV and Pump modules from the front of the Diluter, or reposition them, to more easily access components.

WARNING Risk of personal injury. Contacting exposed electronic components while the instrument is attached to power can cause personal injury from electric shock. Power down completely before removing covers to access electronic components.

---

3. Before removing panels to access electronic components, power down the instrument. See Power Down/Power Up the System in this section.

CAUTION Risk of damage to electronic components. Removing or replacing a circuit card or other electronic component while the power is ON can damage the component. To prevent damage to circuit cards and other electronic components, always turn off the power before removing or replacing the component.

---

4. Before disconnecting or reconnecting any electronic component (including solenoid valves), turn off the instrument. See Power Down/Power Up the System in this section.
5. To keep the power on but ensure the HmX analyzer will not cycle while you are servicing it, or to keep the power on but turn the Pneumatic Power Supply off, set the Standby/Reset switch to Standby (**0**).
6. To operate the instrument with the lower front door open, use a magnet to bypass the lower door switch.

   Note: Use the magnet connected to the lower door if a separate magnet is not available.
7. To avoid electronic noise when operating the HmX analyzer with the upper front door open, install the electromagnetic shield over the sensing area in the CBC module.
8. When resetting the HmX analyzer, be sure to reset the entire system. See Reset the System in this section.

   Note: Because the DMS controls and monitors all the HmX analyzer functions, for correct instrument operation the DMS must maintain constant communication with the Main Unit. Resetting either the DMS or the Main Unit individually instead of resetting the entire system could interrupt that communication.
9. To clear the CPU RAM so that the DMS can reload the software, do the Clear the CPU RAM procedure at the end of this section.
10. You can do most of the procedures in this chapter using the tools in a standard Service Tool Kit, a digital voltmeter, and an oscilloscope. Any special tools or equipment and any supplies needed are listed under “Tools/Supplies Needed” at the beginning of the procedure.

11. Unless otherwise noted, the procedures in this chapter are presented as if you are looking at the front of the HmX analyzer.
12. When you have finished servicing the instrument, always verify instrument performance as follows:
    a. Do a Start Up or System Test.
    b. Check reproducibility as instructed under Heading 4.5, REPRODUCIBILITY CHECKS.
    c. Run controls.

Power Down/Power Up the System

Purpose

WARNING Risk of personal injury. Contacting exposed electronic components while the instrument is attached to power can cause personal injury from electric shock. Power down completely before removing covers to access electronic components.

Following the Power Down procedure ensures all power is removed from the instrument, preventing personal injury from electric shock.

Power Down

ATTENTION: Always place the HmX analyzer in Standby before turning off the power at the main **POWER** switch. Selecting Standby puts the instrument through a controlled power down sequence that ensures the battery-protected memory is protected.

1. Set the Standby/Reset switch to Standby (**0**).
2. Turn OFF the **POWER** switch on the rear of the Electronic Power Supply.
3. Unplug the ac power cord from the ac wall outlet.

Power Up

1. Plug the ac power cord into the ac wall outlet.
2. Turn ON the **POWER** switch on the rear of the Electronic Power Supply.
3. Set the Standby/Reset switch to Ready (**I**).

Reset the System

1. Set the Standby/Reset switch to Standby (**0**).
2. Wait at least 15 seconds.

   Note: Waiting allows the compressor head to partially bleed off pressure.
3. Set the Standby/Reset switch to Ready (**I**).

Clear the CPU RAM

Purpose

Clearing the CPU RAM allows the DMS to reload the instrument software.

Procedure

1. Open the upper front door of the Main Unit.
2. Simultaneously press the **RESET** button on the 376 CPU card and the sample bar (whole-blood switch). See Figure 4.1-1.

Figure 4.1-1 Switches for Clearing the CPU RAM

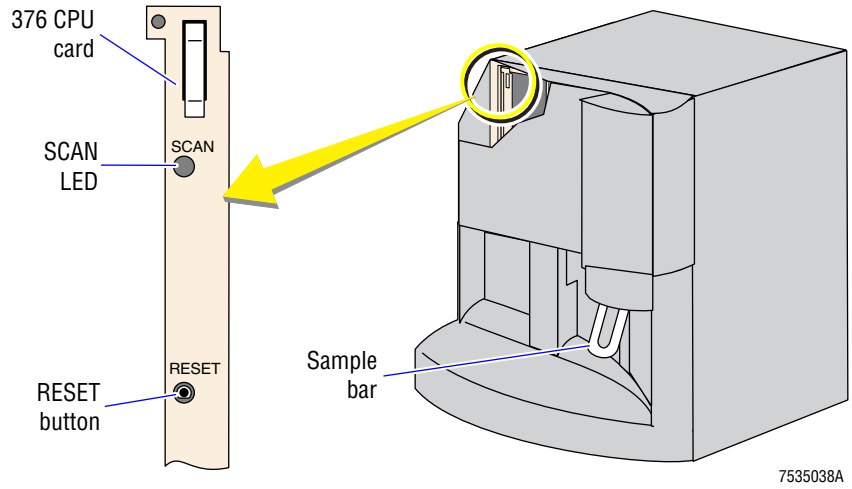

3. Release the **RESET** button, but continue to press the sample bar. The CPU SCAN LED goes off and then on.
4. When the CPU SCAN LED goes off a second time release the sample bar.
5. If the CPU SCAN LED remains off the RAM is erased. Erasing the RAM enables the DMS to reload the instrument software.

4.2 USING THE SERVICE DISK

Purpose

This procedure explains how to correctly use the Service Disk 3 and is valid for all series of personal computers on the HmX analyzer. Use this procedure whenever you need to:

- Access one of the DMS service options or one of the Service Disk 3 software options to perform a troubleshooting, alignment, verification or calibration procedure on the instrument.

  Note: See Heading A.6, SOFTWARE MENU TREES for illustrations of all the HmX analyzer software menu trees.
- Display an enhanced printout for a sample.

The original Service Disk was simply a "key" to open the door to the DMS service options in the DMS program software. The Service Disk 3, however, also contains software for diagnostic programs, tools to help you locate instrument problems.

The procedures under Activating the DMS Service Options show you how to use the Service Disk as a “key” to the DMS service options. The procedures under Using the Service Disk Software on a DMS show you how to access the software options on Service Disk, and the procedures under Using the Service Disk Software on a Hard Drive show you how to install those software options onto the hard drive of your laptop or personal computer.

Use the Deactivating the DMS Service Options procedure when you have completed your tasks and be very careful not to leave the disk at a customer account.

Tools/Supplies Needed

- ❑ Service Disk 3, PN 6915392

Activating the DMS Service Options

1. Ensure the instrument is ON.
2. Insert the Service Disk into drive A.

   Note: There is no prompt to advise you to insert the disk.
3. From the Main menu on the DMS, select **Special Functions ▸▸ Diagnostics ▸▸ Service Options**.

ATTENTION: The Service Disk **must** be in the drive bay while you type the password.

4. Type the password `SERVICE`, then press Enter. The Service Options menu appears on the DMS screen. The options available on the menus are described in Table 4.2-1.
5. To select one of the service options, highlight the option and press Enter.

   Note: To select a service option with fewer key strokes, press the highlighted "hot key."
6. To display the enhanced printout of a sample:
   a. Press F9 to return to the Main menu.
   b. Select **Sample Analysis ▸▸ Run Samples**.
7. To access the WBC histograms:
   a. Press F9 to return to the Main menu.

b. Select **Sample Analysis ▸▸ Run Samples**.

c. Press F6 then Alt+F6 to display the average histograms for both RBC and WBC.

d. Press F7 then Alt+F1, Alt+F2, and Alt+F3 to display the single-aperture histograms for both RBC and WBC.

Deactivating the DMS Service Options

ATTENTION: Always deactivate the service options after you complete your tasks.

1. Remove the Service Disk from drive A.
2. Turn the DMS OFF then ON to reboot the computer and deactivate the DMS service options.

Table 4.2-1 DMS Service Menu Options

Menu Options	Description
Certification	Allows access to routines for determining the reproducibility and carryover results in the Primary, Secondary, and Retic modes.
Latex Checks	Allows you to run latex particles and display the data for various test and adjustments. The options available are: • **Red & White Channel Calibration** - used for calibrating the aperture current voltage in the CBC mode. • **MPV Latex** - not currently used. • **Diff Latex** - used for adjusting the LS, DC and RF gains in the Diff mode. • **Retic Latex** - used for adjusting the LS, DC and RF gain settings in the Retic mode.
WBC Histogram Check	Prints the WBC histogram, with an overlay check, from the last transmitted results.
Switch/Sensor Check	Provides a screen for monitoring the status of the switches and sensors in the Main Unit. For the procedure, see Heading 4.43, SWITCH/SENSOR CHECK.
Test Pulses	Not available on the HmX analyzer.
Enter Secondary Cal Factors	Allows you to manually enter the Secondary-mode calibration factors.
Init Cal Factors	Resets the Cal factors to a default setting of 1.000 in either the Primary or the Secondary mode.
Solenoid Test	Allows you to energize one solenoid or to select and energize a group of solenoids simultaneously. In this function a solenoid remain energized until you de-energize it or for 10 minutes, whichever comes first. For the procedure, see Heading 4.26, SOLENOID VALVES INSPECTION AND REPLACEMENT. Also allows access to the following F5 **Cycles**: • **Erythrolyse Pump Dispense** - activates the Erythrolyse II reagent pump once for checking operation of the pump or for priming the Erythrolyse II reagent lines. • **StabiLyse Pump Dispense** - activates the StabiLyse reagent pump once for checking operation of the pump or for priming the StabiLyse reagent lines. • **Erythrolyse Pump Volume Test (X5)** - activates the Erythrolyse II reagent pump five times for verifying the volume dispensed. • **StabiLyse Pump Volume Test (X7)** - activates the StabiLyse reagent pump seven times for verifying the volume dispensed.

Table 4.2-1 DMS Service Menu Options

Menu Options	Description
Raw Data	Allows you to enable the raw data capture option. When this option is enabled, the raw differential data from subsequent samples is saved to the hard drive so that it can be down loaded to an external drive. A Technical Support representative would generate the request for this raw data.
Secondary Mode Cal	Accesses a routine for establishing calibration factors for the Secondary mode.
Autoloader Tests	Allows you to access four diagnostic routines for testing the Autoloader module: • **Autoloader Test Routine** - does an entire Autoloader module cycle from taking a cassette out of the loading bay to placing the cassette in the unloading bay. Used to check the function of the Autoloader module. • **One Position Cassette Advance** - advances a cassette on the rocker bed to the next cassette position sensor. • **Needle Pierce Test** - moves the cassette to the tube available sensor, pierces the tube, and removes the needle from the tube. Used to check the piercing function and needle alignment. • **Lift and Load/Unload** -picks up a cassette in the loading bay, moves the cassette across the rocker bed, and places the cassette in the unloading bay. Used to check the loading and unloading functions.
Cassette and Position Number	Displays the instrument configuration for the number of positions in a cassette.

Using the Service Disk Software on a DMS

ATTENTION: Use this procedure **each time** you need to access the Service Disk software options on a DMS. Do not install the Service Disk software onto the hard drive of the DMS.

1. Insert the Service Disk onto drive A.
2. Turn the DMS OFF then ON to reboot the computer.
3. When the prompt *Only control files?* appears, to access:
   - Control file data only, press [Y] then press [Enter]. The control files are the files with the prefix 5CII, Latron or Retic-C.

     Note: It is much faster to display only the control files.
   - Sample data or sample and control data, press [N] then press [Enter]. The files you can view with this option are shown in Figure 4.2-1.
4. To graph one or more of the parameter options displayed on the Main Screen:
   a. Using [←], [→], [↑], and [↓], highlight the desired option and then press [Spacebar] to "tag" the option. You can tag up to four options.

      Note: Figures 4.2-2 through 4.2-5 are examples of the types of graphs available. A description accompanies each figure.

   b. Press [Enter].

      Note: The tagged graphs are displayed simultaneously.
5. To enlarge a graph to full size, press [Tab] until the box around the graph is highlighted, then press [Enter].
6. To determine the functions of the F-keys for the displayed graph, press [F1].

7. To determine the statistics for the selected graph (Figure 4.2-6), press F3.

Figure 4.2-1 Control and Sample Files Available for Viewing

CBC: WBC Results	FLAG: Blasts	DIFF: DF2 Summary
CBC: WBC (all apertures)	FLAG: Imm Grans	DIFF: Count Ratio
CBC: RBC Results	FLAG: Variant Lymphs	DIFF: Flow Rate
CBC: RBC (all apertures)	DIFF: LY% Values	5CII: NE DC Mean
CBC: HGB Results	DIFF: MO% Values	5CII: NE DC SD
CBC: HCT Results	DIFF: NE% Values	5CII: NE OP Mean
CBC: MCV Results	DIFF: EO% Values	5CII: NE OP SD
CBC: MCV (all apertures)	DIFF: BA% Values	5CII: NE RLS Mean
CBC: MCH Results	DIFF: LY# Values	5CII: NE RLS SD
CBC: MCHC Results	DIFF: MO# Values	5CII: NE PVR
CBC: RDW Results	DIFF: NE# Values	Latron: Volume
CBC: PLT Results	DIFF: EO# Values	Latron: Conductivity
CBC: PLT (all apertures)	DIFF: BA# Values	Latron: Scatter
CBC: MPV Results	DIFF: NE DC Mean	Latron: Retic Volume
CBC: MPV (all apertures)	DIFF: NE DC SD	Latron: Retic Conductivity
CBC: H & H (HCT&HGB*3)	DIFF: NE OP Mean	Latron: Retic Scatter
FLAG: Partial Aspiration	DIFF: NE OP SD	RETIC: Retic %
FLAG: HGB Incomplete	DIFF: NE RLS Mean	RETIC: Retic #
FLAG: Flowcell Full Clog	DIFF: NE RLS SD	RETIC: Retic + RBC
FLAG: Flowcell PC2	DIFF: NE PVR	Retic-C: Retic%
FLAG: Flowcell PC1	DIFF: NE Pop Dist	
[ESC] - Menu	DIFF: DF1 Summary	

8. To change a single-parameter graph from Sequential (Points) mode (Figure 4.2-7) to an alternate graph mode, use the F-keys indicated below.

   Note: Use the same F-key to deselect the mode and return to the Sequential mode.

   a. To select Zoom mode (Figure 4.2-8) press F4. In this mode -
      - To scroll the selector bar through the points, use ← or →.
      - To accelerate the selector bar, use Ctrl+← or Ctrl+→.

   b. To select Histogram mode (Figure 4.2-9) press F5.

   c. To select Date Offset mode (Figure 4.2-10) press F6. In this mode, to scroll through the data points -
      1) Press F4 to select the Zoom mode.
      2) Use ← or → to move the selector bar, use Ctrl+← or Ctrl+→ to accelerate the selector bar.

9. To change a control-file display (Figure 4.2-11) to another control file, use ↑ and .←

   Note: You can only select control files that have data for the parameter selected.

10. To access the Service Disk utilities, press Esc. Figure 4.2-12 is a menu tree of the utility options, Heading 4.2-2 describes the options and procedures for using the utility options.

11. When you have completed your task, remove Service Disk from the DMS and turn the DMS OFF then ON again to reboot the computer.

Using the Service Disk Software on a Hard Drive

Installing the Software

ATTENTION: Use this procedure to install the Service Disk software onto the hard drive of your personal computer or laptop only. Do not install the Service Disk software onto the hard drive of a DMS.

1. Insert the Service Disk into drive A.
2. At the A:> prompt, type `INSTALL` and press Enter.

   Note: This batch file creates a directory on your C drive and copies the Service Disk utilities to this subdirectory.

Running the Software

ATTENTION: Your computer must have at least 485 K of conventional memory for all the functions to work properly.

1. At the C:> prompt, type `CD\DMSGR` and press Enter.
2. At the C:\DMSGR> prompt, type `DMSGRAPH` and press Enter.

   Note: In addition to using the utilities and viewing the graphs as described under Using the Service Disk Software on a DMS, you can now retrieve and store multiple captured databases on your personal computer or laptop.
3. Select Exit to exit this software and return to the DOS prompt.

Figure 4.2-2 Single-Parameter Graph

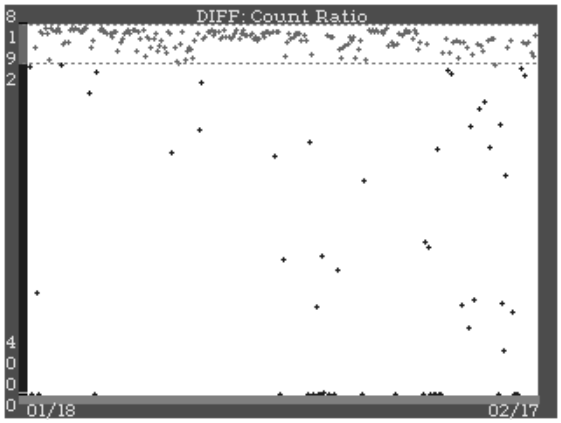

On a **single-parameter graph** the Y-axis represents value and the X-axis represents the sequence of the data collection. Each plot point represents a single value.

Examples of single-parameter graphs are:

- WBC Result
- Hgb Blank Voltage
- Count Ratio.

Single-parameter graphs can also be the result of a function of one or more parameters, such as flow rate where the Y-axis represents WBC result x time.

Single-parameter graphs can be displayed in Zoom, Histogram and Date Offset mode.

Figure 4.2-3 Parameter vs. Parameter Graph

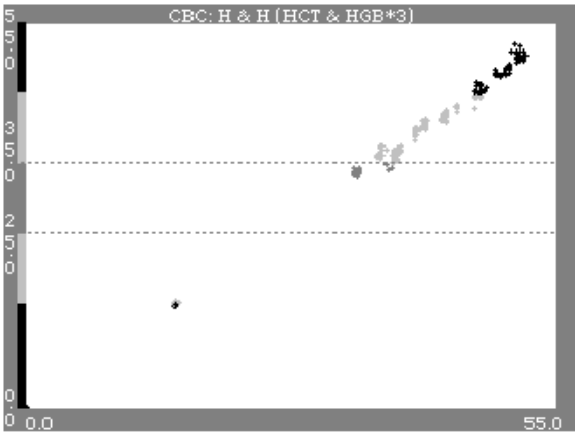

On a **parameter vs. parameter** graph, any single parameter is plotted on the X-axis vs. any other single parameter on the Y-axis.

An example of this is the H & H graph where the Hct result is plotted against 3 x the Hgb result.

Figure 4.2-4 Multiple-Parameter Graph

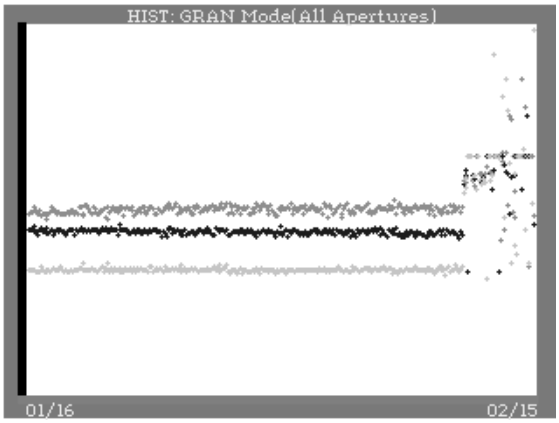

On a **multi-parameter graph**, up to four parameters are plotted simultaneously. Each parameter is plotted in a different color: yellow, green, red or white.

Multi-parameter graphs are built from single-parameter or parameter vs. parameter plots.

The following are built from single-parameter plots:

- RBC Result (all apertures)
- MCV Result (all apertures).

The DF1 Summary graph, on the other hand, is built from three parameter vs. parameter plots: LY DC Mean vs. LY RLS Mean, MO DC Mean vs. MO RLS Mean and NE DC Mean vs. NE RLS Mean.

Figure 4.2-5 Flag Graph

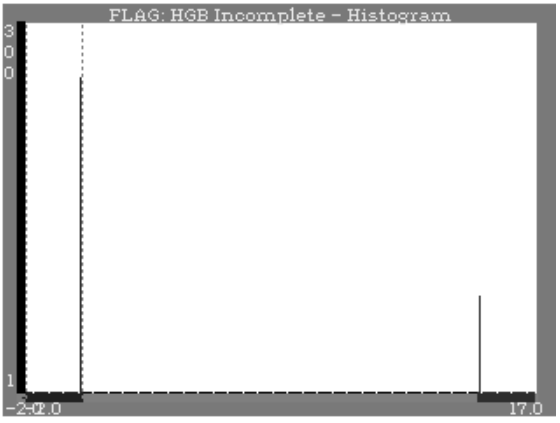

On a **flag graph** the Y-axis represents the number of data points, the X-axis represents the state of the flag.

On all flag graphs except the one for the Imm Grans flag, there are two channels (states) on the X-axis.

- The left channel is OFF (no flag)
- The right channel is ON.

On the Imm Grans flag graph, there are three channels (states) on the X-axis.

- The left channel is OFF (no flag)
- The middle channel is Imm Grans 1
- The right channel is Imm Grans 2.

Figure 4.2-6 Statistics Window

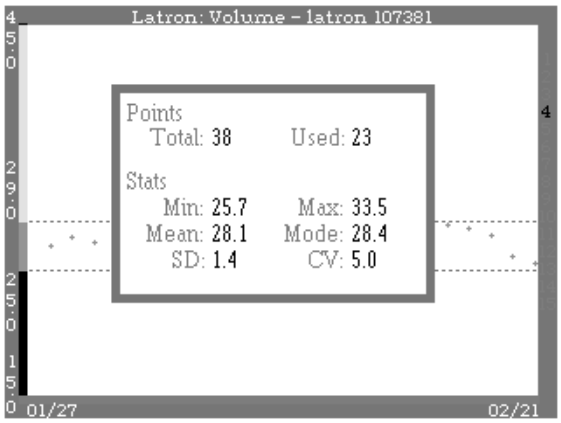

The **statistics window** shows the number of records in the database or control file, the number of points used for building the graph, and the Min, Max, Mean, Mode, SD (standard deviation) and CV for the displayed points.

Not all fields are in all records. For example, a CBC Only mode sample does not have a Count Ratio. The points used to build the graph are less than the total points in the database.

Figure 4.2-7 Sequential (Points) Mode

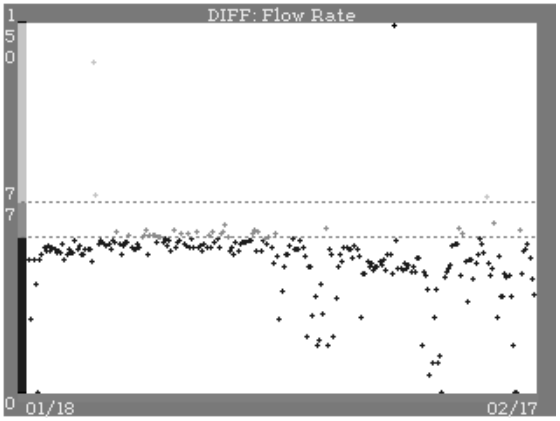

The **Sequential (Points) mode** is the default mode when you first display a graph. The Y-axis represents the value of the parameter, the X-axis represents the order in which the sample runs are stored in the database.

Some Sequential mode graphs are displayed with colored bars on the Y-axis representing ranges for that parameter. Typically:

- Yellow is low
- Green is within range
- Red is high
- White is undefined.

You can select the Zoom mode from the Sequential mode graph.

Figure 4.2-8 Zoom Mode

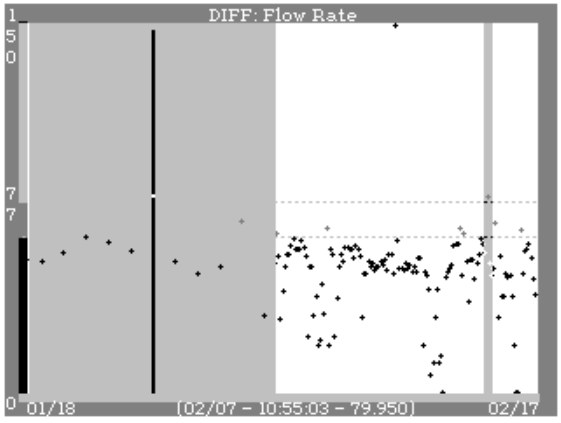

In the **Zoom mode**, the graph is split vertically into two sections.

- The section on the right displays the graph with a selector bar.
- The section on the left displays a magnified view showing the five points on either side of the point selected by the selector bar. To scroll through the points, use ← or →. To accelerate scrolling, use Ctrl+← or Ctrl+→.
- The area of the graph frame below the X-axis displays the date, time and value of the selected point.

You can enable the Zoom mode from either the Sequential or the Date Offset mode.

Figure 4.2-9 Histogram Mode

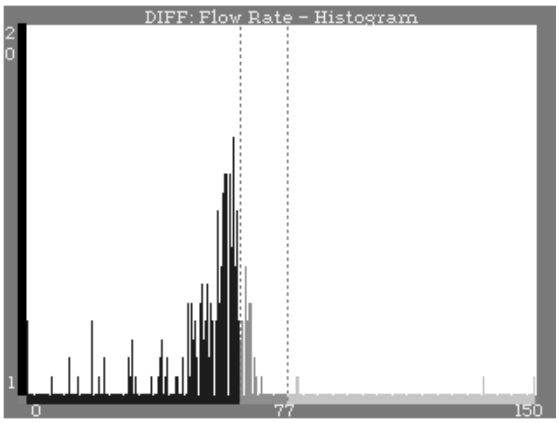

In the **Histogram mode**, the X-axis is divided into 256 channels and the data points are tallied for each channel.

Figure 4.2-10 Date-Offset Mode

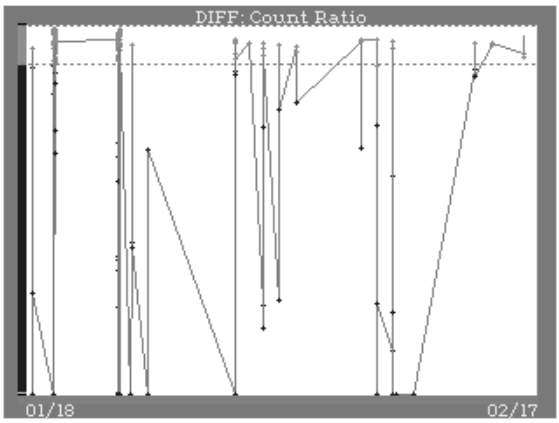

In the **Date Offset mode** the Z-axis changes to reflect the date and time the sample was run. A line is drawn to connect the data points.

You can select the Zoom mode from the Date Offset mode graph to scroll through the data points.

Figure 4.2-11 Control-File Graph

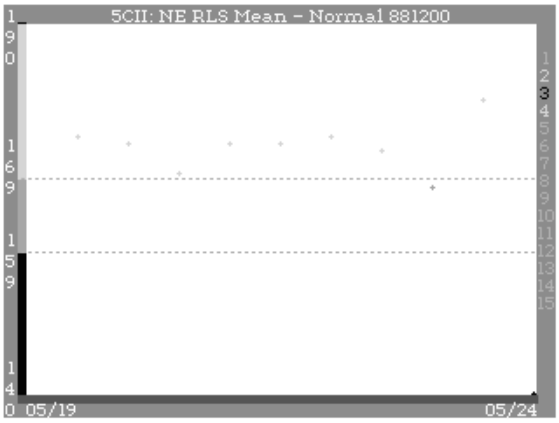

On a **control file graph**, the graph title includes the parameter displayed, the lot number of the control and the control file name. The numbers on the right edge of the graph (1 to 15 or 16 to 30) represent the different control files available. The number of the selected file is highlighted.

By default, data points are white unless you enter and save the assay values for the control. When the assay values are available, the points on the graph are:

- Yellow if they are below assay limits.
- Green if they are within assay limits.
- Red if they are above assay limits.

Use ↓ and ↑ to select other control files.

Figure 4.2-12 Service Disk Utilities Menu Tree

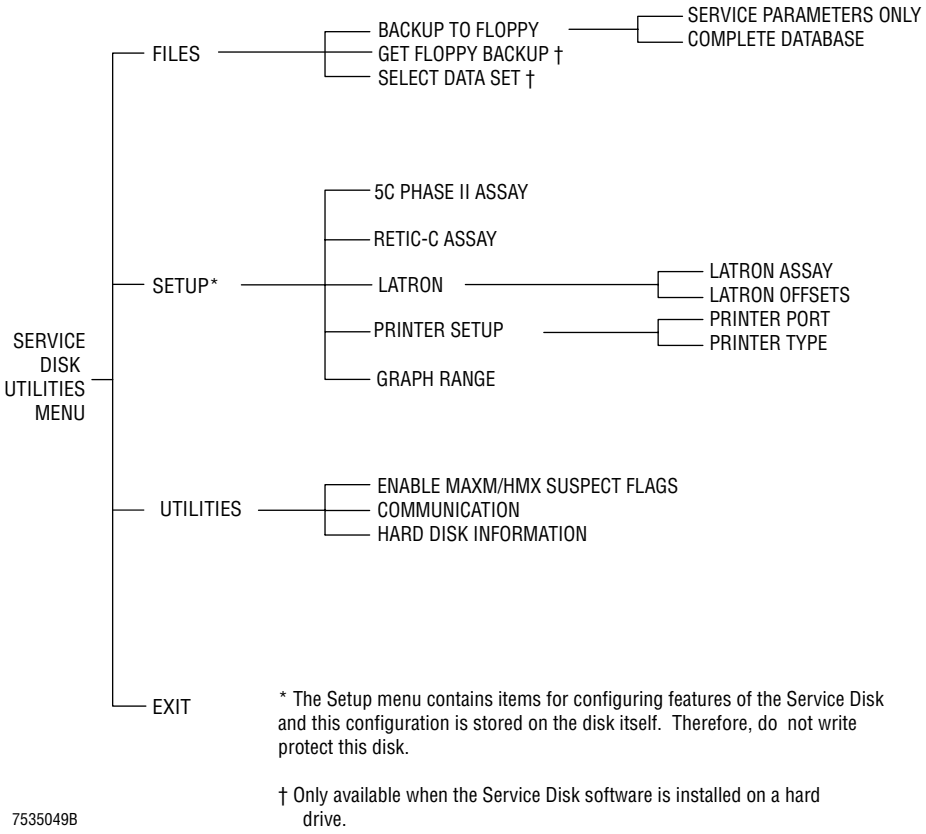

* The Setup menu contains items for configuring features of the Service Disk and this configuration is stored on the disk itself. Therefore, do not write protect this disk.

† Only available when the Service Disk software is installed on a hard drive.

Table 4.2-2 Service Disk Utilities Selections/Explanations

Selection	Description	Procedures
Files ▸▸ Backup to Floppy ▸▸ Service Parameters Only	Allows you to save: • Parameters viewable with Service Disk. Refer to Figure 4.2-1. • All the control files. • Other selected files. See Appendix B, DMS DATABASE FIELDS, for an exact list of what is saved. This option creates a file (DMSDB.CSV) which: • Can be restored and viewed using the Service Disk software installed on a hard drive. (See To Restore the Data and To Select a Data Set below in this table.) • Is compatible with any spreadsheet that reads "Comma Separated Value" or CSV files. You can store several Service Parameter Only databases on a single high-density floppy diskette.	To Store Service Parameter Only Data on a Floppy Diskette 1. From the Service Disk Utilities menu, select **Files ▸▸ Backup to Floppy ▸▸ Service Parameters Only**. 2. Follow the directions on the screen.
Files ▸▸ Backup to Floppy ▸▸ Complete Database	Allows you to save all: • Database parameters. • Control files. See Appendix B, DMS DATABASE FIELDS, for an exact list of what is saved. This option creates three files. The first record of each file contains the column headers for that file. • RDBALL_A.CSV contains sample results. • RDBALL_B.CSV contains sample flags and demographics. • RDBALL_C.CSV contains graphics which must be reconstructed for display. This utility is currently not available. The data in these files: • Can be restored and viewed using the Service Disk software installed on a hard drive. (See To Restore the Data and To Select a Data Set below in this table.) Use this software to display the Service Parameters. • Is compatible with any spreadsheet that reads "Comma Separated Value" or CSV files. Use this type of software to view or graph the other parameters.	To Store a Complete Database on a Floppy Diskette 1. From the Service Disk Utilities menu, select **Files ▸▸ Backup to Floppy ▸▸ Complete Database**. 2. Follow the directions on the screen.

Table 4.2-2 Service Disk Utilities Selections/Explanations *(Continued)*

Selection	Description	Procedures
Files ▸▸ Get Floppy Backup	**ATTENTION:** Only available using Service Disk software installed on a hard drive. Allows you to restore data that was archived on a floppy diskette using the Service Parameters Only option.	To Restore the Data 1. From the Service Disk Utilities menu, select **Files ▸▸ Get Floppy Backup**. 2. Follow the directions on the screen. A list of the data sets available on the floppy diskette is displayed. 3. Use ↓ ↑ until the desired archive is highlighted, then press Enter. 4. If no error appears on the screen, the procedure is complete; the database and control files are extracted and are now stored on the hard drive in a subdirectory of C:\DMSGR. To view the data, see the next procedure, To Select a Data Set below.
Files ▸▸ Select Data Set	**ATTENTION:** Only available using Service Disk software installed on a hard drive. Allows you to select a data set stored on the hard drive. When you first start the hard drive version of the Service Disk software, the message *No Data Set Selected* appears.	To Select a Data Set 1. From the Service Disk Utilities menu, select **Files ▸▸ Select Data Set**. A list of the data sets stored on the hard drive is displayed. 2. Use ↓ ↑ until the desired data set is highlighted, then press Enter. A list of parameters available for viewing is displayed. 3. To select a new data set, press Esc and then repeat steps 1 and 2. To delete a data set, use ↓ ↑ until the data set is highlighted, then press Delete.
Setup ▸▸ 5C Phase II Assay	Allows you to enter and save control file information for 5C cell control parameters. When you graph one of these parameters for a particular lot number: • If you have entered the assay values for that lot number, colored limits are superimposed on the graph. The points on the graph are - ▸ Green when results are within limits. ▸ Red when results are above limits. ▸ Yellow when results are below limits. • If you have not entered the assay values for that lot number, all the points on the graph are white.	To Add a New Lot Number - 5C Cell Contol 1. From the Service Disk Utilities menu, select **Setup ▸▸ 5C Phase II Assay**. 2. Press Insert. 3. Type in the values and press Enter. 4. To change the expected range, press Tab to select that field. **ATTENTION:** Check your entries carefully before saving them. Once a lot number is saved you cannot edit it. 5. Press F10 to save the entries. To delete a lot number, use ↓ ↑ until the lot number is highlighted, then press Delete.

Table 4.2-2 Service Disk Utilities Selections/Explanations *(Continued)*

Selection	Description	Procedures
Setup ▸▸ Retic-C Assay	Allows you to enter and save control file information for Retic-C control parameters. When you graph one of these parameters for a particular lot number: • If you have entered the assay values for that lot number, colored limits are superimposed on the graph. The points on the graph are: ▸ Green when results are within limits. ▸ Red when results are above limits. ▸ Yellow when results are below limits. • If you have not entered the assay values for that lot number, all the points on the graph are white.	To Add a New Lot Number - Retic C 1. From the Service Disk Utilities menu, select **Setup ▸▸ Retic-C Assay**. 2. Press [Insert]. 3. Type in the values and press [Enter]. 4. To change the expected range, press [Tab] to select that field. **ATTENTION:** Check your entries carefully before saving them. Once a lot number is saved you cannot edit it. 5. Press [F10] to save the entries. To delete a lot number, use [↓][↑] until the lot number is highlighted, then press [Delete].
Setup ▸▸ Latron ▸▸ Latron Assay	Allows you to enter and save LATRON control assay values and limits. When graphing a LATRON control file, colored limits are superimposed on the graph. The points on the graph are: • Green when results are within limits. • Red when results are above limits. • Yellow when results are below limits.	To Enter the LATRON Assay Values 1. From the Service Disk Utilities menu, select **Setup ▸▸ Latron ▸▸ Latron Assay**. 2. Type in the values and press [Enter]. 3. To change the expected range, press [Tab] to select that field. 4. Press [Esc] to save the entries and return to the Main Screen menu.
Setup ▸▸ Latron ▸▸ Latron Offsets	Allows you to enter the intrument's mean recovered values for LATRON control so that the instrument can generate limits for the LATRON control that are adjusted for the instrument's gain setting. **Note**: Since the LATRON control parameters are directly affected by gain, the limits **must** be adjusted whenever the LATRON control mean results are not nominal. The new, gain-adjusted limits are highlighted on the graph; the original limits are dimmed.	To Set the LATRON Offsets 1. From the Service Disk Utilities menu, select **Setup ▸▸ Latron ▸▸ Latron Offsets**. 2. Enter the mean recovered values for LATRON control. 3. Press [Esc] to return to the Main Screen menu.
Setup ▸▸ Printer Setup ▸▸ Printer Port	Allows you to select the Printer port that is used when you press [Print Screen] to print the display. The available options are LPT1 and LPT2. LPT1 is the default setting.	To Change the Printer Port 1. From the Service Disk Utilities menu, select **Setup ▸▸ Printer Setup ▸▸ Printer Port**. 2. Press [Spacebar] to switch to the alternate option. 3. Press [Esc] to return to the Main Screen menu.

Table 4.2-2 Service Disk Utilities Selections/Explanations *(Continued)*

Selection	Description	Procedures
Setup ▸▸ Printer Setup ▸▸ Printer Type	Allows you to select the Printer type that is used when you press [Print Screen] to print the display. The available options are Epson (typically dot matrix) and HP3 (Hewlett Packard Laser Jet III). Epson is the default setting.	To Change the Printer Type 1. From the Service Disk Utilities menu, select **Setup ▸▸ Printer Setup ▸▸ Printer Type**. 2. Press [Spacebar] to switch to the alternate option. 3. Press [Esc] to return to the Main Screen menu.
Setup ▸▸ Graph Range	Allows you to limit the number of points graphed to a set number of days from the date of the last record in the database. The default setting is 120 days. **Note**: This option affects only the graphing of data points. It does not affect the capturing of data using the Backup to Floppy option.	To Change the Number of Days of Data Included in the Graphs 1. From the Service Disk Utilities menu, select **Setup ▸▸ Graph Range**. 2. Type in the number of days of data you want included in the graphs and press [Enter]. 3. Press [Esc] to return to the Main Screen menu.
Utilities ▸▸ Enable MAXM/HmX Suspect Flags	Enables or disables the HmX analyzer Suspect Flags. Menu selection displayed varies according to the disposition of the Suspect Flags. • If the Suspect Flags are disabled, the menu selection is **Enable MAXM/HmX Suspect Flags**. • If the Suspect Flags are enabled, the menu selection is **Disable MAXM/HmX Suspect Flags**.	To Enable or Disable the Suspect Flags 1. From the Service Disk Utilities menu, select **Utilities.** 2. If Suspect Flags are disabled, select **Enable MAXM/HmX Suspect Flags** to enable them. 3. If Suspect Flags are enabled, select **Disable MAXM/HmX Suspect Flags** to disable them.
Utilities ▸▸ Communication	Selecting this menu item starts the SIMPCOM communications program. When the program first loads, the default settings are the settings required for communication to the Bar-Code Reader Decoder card.	1. Connect the appropriate communications cable to the Bar-Code Reader Decoder card. Refer to Connecting the Bar-Code Communications Cable under Heading 4.38, BAR-CODE READER DECODER CARD CONFIGURATION. 2. From the Service Disk Utilities menu, select **Utilities ▸▸ Communication.** 3. Type < D > to display the Microscan Main Menu. 4. Reconfigure the Bar-Code Reader Decoder card. Refer to Selecting the Settings for the Microscan™ Bar-Code Reader Decoder Card under Heading 4.38, BAR-CODE READER DECODER CARD CONFIGURATION.

Table 4.2-2 Service Disk Utilities Selections/Explanations *(Continued)*

Selection	Description	Procedures
Utilities ▸▸ Hard Disk Information	On computers with an IDE-type hard drive, displays information about the hard drive, such as type, serial number and formatted capacity. **Note**: If the computer has an MFM drive, such as the one used on the Intel 301Z, it generates an error.	

4.3 WHOLE BLOOD VERIFICATION - CBC/DIFF

Purpose

Use this procedure to determine the CBC and diff instrument performance.

Note: This procedure allows you to check the instrument's reproducibility, plus the differential counts and the scatterplots for the specimen. The reproducibility procedure (Heading 4.5, REPRODUCIBILITY CHECKS) only checks the instrument's reproducibility.

Tools/Supplies Needed

- ❑ Service Disk
- ❑ 5 mL of normal whole blood drawn in K_3EDTA within the last 5 hours

Procedure

1. Activate the service options as directed under Heading 4.2, USING THE SERVICE DISK.
2. Ensure that Auto print is turned on via [F5] **Optns**.
3. Ensure the Diff mode is enabled via [F3] **Run,** [F6] **DIFF ON/OFF**.
4. Select the Calibration Reproducibility screen (**Special Functions ▸▸ Calibration ▸▸ Reproducibility**). Delete the file before running this test.

ATTENTION: Fresh whole blood must be used for all parameters. Run this test carefully and rapidly to minimize excessive data drifts. If the test is interrupted, it will cause a five-part diff result to appear as though there were a system failure, when, in fact, there was not a failure.

5. Aspirate 11 samples from the whole blood specimen, and delete the first one.
6. From the Reproducibility screen, print a matrix copy of the file. Ensure that the data in the file falls within the limits specified in Table A.1-10, CBC and Diff Reproducibility Limits.
7. Ensure the scatterplots appear similar and do not have obvious differences.
8. Examine each scatterplot for good separation. Good separation means:
   - In DF1 the LY and MO populations are separated from the NE population, the NE population is centered in its region, and the LY population is fairly rounded and well-defined.
   - The LS histogram has a deep valley.

   Note: If the optical axis is not focused properly, separation is lost, the LY population is distorted, and the LS histogram has a shallower valley. The LATRON control is not sensitive to optical defocusing; it could still have a very good CV, narrow histogram and small gain reduction.

ATTENTION: Do not attempt to correct optical focusing by adjusting the LS gain. Realign the optical axis. Always use normal blood for verification of the optical adjustment.

9. If the separation of the five-part diff populations is poor, try another specimen to rule out the possibility of a "bad" specimen. If the separation on the second specimen is also poor, this is probably an instrument problem. Refer to Heading 4.9, VCS OPTIMIZATION.

   Note: If the CV% for V, C, and S are passing specification but still produce poor separation, investigate and take corrective action.

10. Ensure the cell count is ≥7,750 for at least eight of the blood samples. Two samples may fall below 7,750 as long as they are ≥7,000.
11. Ensure that the count time is within the proper time limits for the sample used.
12. If the instrument fails the criteria by a small increment, then repeat steps 5 and 6. If the instrument fails again, review the data for possible failures and take corrective action.

4.4 LATEX CALIBRATION AND VERIFICATION

Purpose

This section includes two latex calibration and verification procedures.

- Use the CBC Latex Calibration and Verification procedure to verify the aperture voltages are adjusted correctly.
- Use the Diff and Retic Latex Calibration and Verification procedure to verify the DC, RF, and LS gains are adjusted correctly.

CBC Latex Calibration and Verification

Tools/Supplies Needed

- ❑ Service Disk

CAUTION Deteriorated latex particles can clog the apertures. Latex particles deteriorate when exposed to direct sunlight or to temperatures above 45°C (113°F). DO NOT use latex particles that have been exposed to these conditions.

IMPORTANT Making adjustments with insufficient data could produce erroneous results. The particle concentration of LATRON control is low. DO NOT use LATRON control for this procedure.

- ❑ 94.3 fL latex particles, PN 6857371

Procedure

1. Activate the service options as directed under Heading 4.2, USING THE SERVICE DISK.
2. From the Service Options menu, select **Latex Checks ▸▸ Red & White Channel Calibration**.
3. Press F2 to enter the assay value for the latex particles. Use the numeric keypad to enter the assay value indicated on the vial, then press Enter.
4. Press F3 to prepare the unit for latex sampling. The System Status field displays *R/W LTX CAL ON* when ready.
5. Immerse the aspirator tip in a well-mixed vial of the latex particles, and press the sample bar.
6. Verify that the counts on the DMS screen are within the limits specified in Table A.1-3, CBC Latex Calibration.
7. Verify that the RBC Mode and WBC Mode values are within the limits specified in Table A.1-3, CBC Latex Calibration.
8. Verify that the RBC and WBC aperture current voltages are within the limits specified in Table A.1-3, CBC Latex Calibration.
9. If the modes are unacceptable:
   a. Adjust either the RBC or WBC aperture current voltage at the R/W Preamp card using the computed voltage displayed on the DMS, ensuring that they are within the limits specified in Table A.1-3, CBC Latex Calibration.
   b. Repeat from step 5.

10. If the modes and aperture current voltages are acceptable and you did this procedure as part of installation, print out the results and attach the printouts to the installation test data log sheets as directed in Verifying the CBC Latex Calibration, step 2, under Heading 3.7, ADJUSTMENTS AND CALIBRATION.
11. Press F10 to stop the CBC-Latex Calibration routine.
12. Press F9 to return to the Main menu.

Diff and Retic Latex Calibration and Verification

Tools/Supplies Needed

- ❑ Service Disk
- ❑ LATRON primer, PN 7546915
- ❑ LATRON control, PN 7546914
- ❑ LATEX PARTICLES DC/RF, PN 6605419 (for DC and RF gain adjustments only)

Procedure

1. Ensure that the system and the laser have been on for at least 15 minutes.
2. Activate the service options as directed under Heading 4.2, USING THE SERVICE DISK.
3. From the Service Options menu, select **Latex Checks ▸▸ Diff Latex Calibration**.
4. Press F3 **Secondary**. The System Status field displays *DIFF LTX CAL ON* when ready.
5. Immerse the aspirator tip in a vial of LATRON primer, and press the sample bar. Maintain the aspirator tip in the vial until a beep sounds at the DMS.
6. When the DMS displays the message, *To stop rerun, press aspiration switch now*, press the sample bar to quit the continuous counts function.
7. Verify that the count is within the limits specified for service in Table A.1-17, LATRON™ Primer Background Limits. Repeat if necessary.
8. Prepare the LATEX PARTICLES DC/RF as directed in the Product Insert for the LATEX PARTICLES DC/RF.

IMPORTANT Doing continuous counts on the large LATEX PARTICLES DC/RF allows those particles to collect in the flow cell, which shifts the RF gain and can plug the flow cell. To gather LATEX PARTICLES DC/RF data, always do single counts on samples of the prepared LATEX PARTICLES DC/RF suspension.

9. Cycle a sample of the LATEX PARTICLES DC/RF suspension. When the DMS displays the message, *To stop rerun, press aspiration switch now*, press the sample bar to quit the continuous counts function.
10. Ensure the DC and RF results are within the limits specified on the Product Insert for the LATEX PARTICLES DC/RF.
11. If the DC and RF results not within limits, adjust the gains for DC (R17) and RF (R26) on the RF Detector Preamp card until the mean channels for DC and RF are the assigned assay values on the Product Insert for the LATEX PARTICLES DC/RF.
12. Repeat steps 9 through 11 until the DC and RF results are within limits.

13. Cycle five samples of the LATEX PARTICLES DC/RF suspension, doing single counts on each, and ensure the average of the DC and RF results are within the limits specified on the Product Insert for the LATEX PARTICLES DC/RF.
14. If the DC and RF results not within limits, correct the problem and repeat this procedure. Go to Heading 7.4, DC, RF, OR LS LATEX CALIBRATION PROBLEMS.
15. Adjust the LS gain in the Diff mode.
    a. Cycle one sample of LATRON primer:
        1) Immerse the aspirator tip in a vial of LATRON primer, and press the sample bar. Maintain the aspirator tip in the vial until a beep sounds at the DMS.
        2) When the DMS displays the message, *To stop rerun, press aspiration switch now*, press the sample bar to quit the continuous counts function.

        Note: It is good practice to flush the system with LATRON primer whenever you change the particle types.
    b. Verify that the count is within the limits specified for service in Table A.1-17, LATRON™ Primer Background Limits.
    c. Cycle one sample of LATRON control and ensure that the count is 8192 and that the diff LS mean result is within the limits specified in Table A.1-18, LATRON™ Control Calibration and Verification Limits.
    d. If the LS mean criterion is not met, adjust the LS gain as needed. Use R8 (the left potentiometer) on the LS Preamp 5 module to adjust the LS gain in the Diff mode.
    e. Repeat steps c and d until the **diff** LS mean is within limits.
16. Verify the DC, RF, and LS gains in the Diff mode.
    a. Cycle five samples of LATRON control, doing single counts on each, and print out the results of each count.
    b. Ensure the mean channels, CVs, and mean to mode differences for each set of results, and the average of the diff LS mean results are within the limits specified in Table A.1-18, LATRON™ Control Calibration and Verification Limits.
    c. If the DC, RF, or LS results not within limits, correct the problem and repeat this procedure. Go to Heading 7.4, DC, RF, OR LS LATEX CALIBRATION PROBLEMS.
    d. If you checked the gains in the Diff mode as part of installation, attach printouts of the five sets of results to the Installation Test Data Log Sheets as directed in Verifying the Diff and Retic Latex Calibration, step 2, under Heading 3.7, ADJUSTMENTS AND CALIBRATION.
17. Adjust the LS gain in the Retic mode.
    a. From the Service Options menu, select **Latex Checks ▸▸ Retic Latex Calibration**.
    b. Press F3 **Secondary**. The System Status field displays *RET LTX CAL ON* when ready.
    c. Cycle one sample of LATRON control in the Retic mode and verify that the count is 8192 and that the retic LS mean result is within the limits specified in Table A.1-18, LATRON™ Control Calibration and Verification Limits.
    d. If the LS mean criterion is not met, adjust the LS gain as needed. Use R16 (the right potentiometer) on the LS Preamp 5 module to adjust the LS gain in the Retic mode.
    e. Repeat steps c and d until the retic LS mean result is within limits.

18. Verify the DC, RF, and LS gains in the Retic mode.
    a. Cycle five samples of LATRON control, doing single counts on each, and print out the results of each count.
    b. Ensure the mean channels, CVs, and mean to mode differences for each set of results, and the average of the retic LS mean results are within the limits specified in Table A.1-18, LATRON™ Control Calibration and Verification Limits.
    c. If the DC, RF, or LS results are not within limits, correct the problem and repeat this procedure. Go to Heading 7.4, DC, RF, OR LS LATEX CALIBRATION PROBLEMS.
    d. If you checked the gains in the Retic mode as part of installation, attach printouts of the five sets of results to the Installation Test Data Log Sheets as directed in Verifying the Diff and Retic Latex Calibration, step 3, under Heading 3.7, ADJUSTMENTS AND CALIBRATION.
19. If you checked or adjusted the LS gains as part of the VCS Optimization procedure, continue with that procedure. Measure the noise levels as directed in Diff and Retic RMS Noise Checks under Heading 4.12, RMS NOISE CHECKS.
20. Press F9 to return to the Main menu.

4.5 REPRODUCIBILITY CHECKS

Purpose

Use the procedures in this section to check the reproducibility of the instrument in the Primary mode, Secondary mode, and Reticulocyte mode. For more detailed procedures, refer to the Special Procedures and Troubleshooting manual.

Verifying Reproducibility in the Primary Mode

Tools/Supplies Needed

- ❑ A minimum of two tubes of normal, whole-blood with parameter values within the limits specified in Tables A.1-8 and A.1-9.

  Note: If you are doing this procedure as part of Secondary mode - to - Primary mode calibration, you may need additional blood from the same donor.

Procedure

1. Select **Reproducibility** (**Special Functions ▸▸ Calibration ▸▸ Reproducibility**).
2. If running a HmX analyzer with Rotary Cap-Pierce module:
   a. Press F2 **Start Primary** to initiate a Primary-mode Reproducibility cycle. The System Status displays *REPRO 1° ON* when ready.
      - If the DMS displays *MODE REQUIRES EXISTING RUNS TO BE DELETED. ARE YOU SURE/: NO*, press Spacebar Enter to delete the reproducibility table.
      - If the reproducibility table contains data, press F8 Spacebar Enter to delete the data.

   b. Cycle a sample from one of the specimen tubes as the prime sample.
   c. Cycle the other specimen tube 10 times.
3. If running a HmX analyzer with Autoloader module:
   a. Set the number of aspirations per tube to one.
   b. Press F2 **Start Primary** to initiate a Primary-mode Reproducibility cycle. The System Status displays *REPRO 1° ON* when ready.
      - If the DMS displays *MODE REQUIRES EXISTING RUNS TO BE DELETED. ARE YOU SURE/: NO,* press Spacebar Enter to delete the reproducibility table.
      - If the reproducibility table contains data, press F8 Spacebar Enter to delete the data.

   c. Place the cassette in the loading bay and run the prime sample.
   d. When the instrument completes the prime cycle, press F3 **Run** F9 **Stop** and then reset the number of aspirations per tube to 10.
   e. Press F2 **Start Primary** to initiate a Primary-mode Reproducibility cycle.
   f. Insert the remaining tube into an **empty** cassette and place the cassette in the loading bay. The instrument automatically processes the specimen 10 times.
4. Observe the instrument while it is cycling and ensure proper operation.

5. When the cycles are completed, compare the results to the limits specified in Table A.1-10, CBC and Diff Reproducibility Limits.

   Note: The results of the prime run are automatically deleted from the calculations.

6. If any CV or maximum range is out of tolerance, the reproducibility has failed. Correct the problem and repeat the test.
7. If the results are within the tolerances and if you did this procedure as a preliminary step in mode-to-mode calibration and/or as part of installation, save the remainder of the normal whole-blood specimen and a copy of the reproducibility table.
8. If you did this procedure as part of installation, print out and attach the completed reproducibility table to the Installation Test Data Log Sheets as directed in Checking Reproducibility and Carryover in the Primary Mode, step 2, under Heading 3.7, ADJUSTMENTS AND CALIBRATION.
9. Press F3 F9 to return the System Status field to *Select Function,* and select the desired mode.
10. Press Esc F9 to access the Main menu.

Verifying Reproducibility in the Secondary Mode

Tools/Supplies Needed

- ❑ One normal, whole-blood specimen with parameter values within the limits specified in Tables A.1-8 and A.1-9.

Procedure

1. Select **Reproducibility** (**Special Functions ▸▸ Calibration ▸▸ Reproducibility**).
2. If the System Status field is not displaying *Select Function*, press F9 **Stop** to change the System Status to *Select Function*.
3. Press F3 **Secondary**. The System Status field displays *REPRO 2° ON* when ready.
   - If the DMS displays *MODE REQUIRES EXISTING RUNS TO BE DELETED. ARE YOU SURE/: NO*, press Spacebar Enter to delete the reproducibility table.
   - If the reproducibility table contains data, press F8 Spacebar Enter to delete the data.
4. Run eleven samples of the specimen in the Secondary mode.

   Note: The first of the eleven samples is the prime sample.

   a. Mix and uncap the fresh, normal whole-blood specimen.

   b. Immerse the aspirator tip in the specimen and press the start bar.

   c. Repeat steps a and b for a total of 11 times.

5. Compare the results to the limits specified in Table A.1-10, CBC and Diff Reproducibility Limits.
6. If any CV or maximum range is out of tolerance, the reproducibility has failed. Correct the problem and repeat the test.
7. If the results are within the tolerances and if you did this procedure as part of installation, print out and attach the completed reproducibility table to the Installation Test Data Log Sheets as directed in Checking Reproducibility and Carryover in the Secondary Mode, step 2, under Heading 3.7, ADJUSTMENTS AND CALIBRATION.

8. Press F3 F9 to return the System Status field to *Select Function,* and select the desired mode.
9. Press Esc F9 to access the Main menu.

Verifying Retic % Reproducibility (Sample Analysis)

Tools/Supplies Needed

- ❑ One tube of normal, whole-blood with sufficient quantity to pipet a minimum of 500 µL
- ❑ Reagent A
- ❑ Reagent B with assembled Statmatic dispenser
- ❑ Two air displacement pipets fixed or adjustable, one calibrated to 50 µL and the other to 2 µL
- ❑ Test tubes

Procedure

1. Prepare the whole-blood specimen with the ReticPrep™ reagents using the procedure on the package insert of the ReticPrep reagent kit.
2. After 5 minutes incubation, and one at a time, prepare 10 clearing solution samples (Reagent B) from the one stained sample, analyzing each after 30 seconds as described in the ReticPrep procedure.
3. From the DMS Main menu, select **Special Functions ▸▸ Calibration ▸▸ Reproducibility**.
4. From the Run screen, press F4 **Retic**.
5. Cycle the samples prepared in step 2, 11 consecutive times, deleting the first result.
6. Verify that the CV % passes. See Table A.1-11, Retics Reproducibility Limits.
7. If you checked Retic % reproducibility as part of installation, go back to Checking Reproducibility and Carryover for the Retic Parameter under Heading 3.7, ADJUSTMENTS AND CALIBRATION, and begin at step 3.

4.6 CARRYOVER CHECKS

Purpose

Use the procedures in this section to check the carryover of the instrument in the Primary mode, Secondary mode, and Reticulocyte mode.

Checking Carryover in the Primary Mode

Tools/Supplies Needed

- ❑ Service Disk
- ❑ Two normal, whole-blood specimens (only one is needed on instruments with a Rotary Cap-Pierce module)
- ❑ Three specimen tubes with clean diluent

Procedure

1. Activate the service options as directed under Heading 4.2, USING THE SERVICE DISK.
2. From the Service Options menu, select **Certification ▸▸ Carryover**.
3. If the System Status field is not displaying *Select Function*, press F9 **Stop** to change the System Status to *Select Function*.
4. If the carryover table contains data, delete the data.
5. Press F2 **Start Primary**. The System Status field displays *CARRYOVER 1° ON* when ready.
6. If running a HmX with Autoloader module:
   a. Insert the two normal, whole-blood specimen tubes into positions 1 and 2 of a cassette, and insert the three tubes of clean diluent into positions 3 through 5.
   b. Place the cassette in the loading bay to initiate the cycle.
7. If running a HmX with Rotary Cap-Pierce module:
   a. Cycle the tube of normal whole-blood twice.
   b. Cycle the three tubes of clean diluent.
8. Observe the instrument while cycling and ensure the cycle finishes correctly.
9. Ensure the carryover results are within the limits specified in Heading A.1-6, Primary/Secondary-Mode Carryover Limits.
10. If the results are out of tolerance, the carryover has failed. Correct the problem and repeat this test.
11. If the results are within tolerance and you did this procedure as part of installation, print out and attach the completed carryover table to the Installation Test Data Log Sheets as directed in Checking Reproducibility and Carryover in the Primary Mode, step 4, under Heading 3.7, ADJUSTMENTS AND CALIBRATION.
12. Press F3 F9 to return the System Status field to *Select Function,* and select the desired mode.
13. Press Esc F9 to access the Main menu.

Checking Carryover in the Secondary Mode

Tools/Supplies Needed

- ❑ Service Disk
- ❑ One normal, whole-blood specimen
- ❑ Diluent in a clean vial or specimen tube

Procedure

1. Activate the service options as directed under Heading 4.2, USING THE SERVICE DISK.
2. From the Service Options menu, select **Certification ▸▸ Carryover**.
3. If the System Status field is not displaying *Select Function*, press F9 **Stop** to change the System Status to *Select Function.*
4. If the carryover table contains data, delete the data.
5. Press F3 to select the Secondary mode. The System Status field displays *CARRYOVER 2° ON* when ready.
6. Cycle two samples from the specimen tube in the Secondary mode, then cycle diluent three times to obtain the carryover results.
7. Ensure that the carryover results are within limits specified in Heading A.1-6, Primary/Secondary-Mode Carryover Limits.
8. If the results are out of tolerance, the carryover has failed. Correct the problem and repeat this test.
9. If the results are within the tolerances and if you did this procedure as part of installation, print out and attach the carryover table to the Installation Test Data Log Sheets as directed in Checking Reproducibility and Carryover in the Secondary Mode, step 4, under Heading 3.7, ADJUSTMENTS AND CALIBRATION.
10. Press F3 F9 to return the System Status field to *Select Function,* and select the desired mode.
11. Press Esc F9 to access the Main menu.

Retic Carryover Tests

Tools/Supplies Needed

- ❑ Normal whole blood, sufficient quantity to pipet and aspirate a minimum of 1 mL
- ❑ Reagent A
- ❑ Reagent B with assembled Statmatic dispenser
- ❑ One air displacement pipet, fixed or adjustable, calibrated to 50 µL
- ❑ One air displacement pipet, fixed or adjustable, calibrated to 2 µL
- ❑ Test tubes
- ❑ Service Disk

IMPORTANT Performing the Retic carryover test procedures out of order can affect the results. Always perform the Retic carryover test procedures in this order:

1. General Instructions
2. Mode-to-Mode
3. Within Mode.

General Instructions

1. Ensure that background counts are within limits before performing this test.
2. Activate the service options as directed under Heading 4.2, USING THE SERVICE DISK.
3. Ensure that the parallel printer is on-line and auto print is enabled.

Retic Mode-to-Mode Carryover

1. From the Main menu, select **Sample Analysis ▸▸ Run Samples**.

   Note: Preparation for cycling in the Primary mode with the Diff mode On begins automatically.
2. Cycle three samples of whole blood in the Primary mode. Ensure that the cell count for the Diff is within the limits specified in the footnote in Table A.1-7, Retic Mode-to-Mode and Within-Mode Carryover Limits*.
3. From the Run screen, press F5 **Retic**.
4. Dispense 2 mL of Reagent B into six clean test tubes.

   Note: Set three of these tubes aside for the Retic Within Mode procedure below.
5. Aspirate three Reagent B samples (rinses) in the Retic mode and print out the results of each count.
6. Verify that the results are within the tolerances specified for mode-to-mode carryover in Table A.1-7, Retic Mode-to-Mode and Within-Mode Carryover Limits*.
   - If the results are out of tolerance, the carryover has failed. Correct the problem and repeat this test.
   - If the results are within the tolerances and if you did this procedure as part of installation, attach the printouts to the Installation Test Data Log Sheets as directed in Checking Reproducibility and Carryover for the Retic Parameter, step 4, under Heading 3.7, ADJUSTMENTS AND CALIBRATION.
7. Check the Retic within-mode carryover. See Retic Within Mode below.

Retic Within Mode

1. Prepare whole blood specimen with ReticPrep™ reagents using procedure on package insert of ReticPrep reagent kit.
   a. Allow stained specimen to incubate 5 minutes.
   b. One at a time, prepare three clearing solution samples (Reagent B) from the one stained sample.
2. Aspirate three Retic samples followed by three Reagent B samples (rinses) and print out the results of each count.

3. Verify that the results are within the tolerances specified for within mode carryover in Table A.1-7, Retic Mode-to-Mode and Within-Mode Carryover Limits*.
   - If the results are out of tolerance, the carryover has failed. Correct the problem and repeat this test.
   - If the results are within the tolerances and if you did this procedure as part of installation, attach the printouts to the Installation Test Data Log Sheets as directed in Checking Reproducibility and Carryover for the Retic Parameter, step 6, under Heading 3.7, ADJUSTMENTS AND CALIBRATION.

4.7 INITIAL ADJUSTMENT OF PRIMARY-MODE CALIBRATION FACTORS

Purpose

You adjust the Primary-mode calibration factors to ensure accuracy of the instrument's results. Use this procedure to make the initial adjustment of the Primary-mode calibration factors. The laboratory is responsible for the final adjustment of the calibration factors using S-CAL calibrator or a whole blood calibration procedure.

Tools/Supplies Needed

- ❑ 5C Normal cell control

Procedures

1. Select **Special Functions ▸▸ Calibration ▸▸ CBC Calibration**.
2. If running a HmX analyzer with Autoloader module, set the number of aspirations per tube to 11.

   Note: The maximum number that can be entered is 12.
3. Press F2 **Start Primary** to select the Primary-mode cycle. The System Status field displays *CALIBRATION ON* when ready.
4. Obtain the assay sheet for 5C Normal cell control, and enter the HmX analyzer assay values for WBC, RBC, Hgb, MCV, Plt, and MPV into the Ref. Values field on the CBC Calibration screen.
5. Press F2 **Run/Ref** to place the cursor on the run line for sample number one.
6. Allow the controls to come to room temperature and then mix according to control package insert.
7. Cycle the 5C Normal cell control 11 times. If running a HmX analyzer with Autoloader module, place the tube of cell control into a 5-mL tube-size cassette and place the cassette into the loading bay. The system automatically processes the specimen 11 times based on what was entered in step 2.
8. Observe the instrument and ensure proper operation of the system while cycling.
9. When the instrument completes the cycles, review the data:
   a. Check results for trending. Take appropriate action if trending is present.
   b. Verify results fall within the following maximum CV% for each parameter specified in Table A.1-2, Acceptable CV Limits for Initial Adjustments to 5C Cell Control.
   c. Verify the "New Cal Factors" are within the ranges specified in Table A.1-1, Acceptable Cal Factor Ranges.
10. Press F9 **Stop** to return the System Status to *Select Function*.
11. Select all parameters for calibration:
    a. Press F5 **Optns**.
    b. Select **Select Parameters**.
    c. Set YES for all parameters. Use the Spacebar to switch between NO and YES.
    d. Press Esc.

12. Select **Transmit Factors** to transmit the new factors. If the optional Graphic Printer is installed, when prompted press Spacebar to answer YES and then press Enter to print the data.

    Note: If a Graphic Printer is not installed, record the data. When you transmit the new calibration factors, the calibration batch table is deleted and the OLD CAL Fac field displays the new, current calibration factors.

13. If you did this procedure as part of installation, attach the printout (or record the data) on the Installation Test Data Log Sheets as directed in Making Initial Primary-Mode Calibration Adjustments, step 3, under Heading 3.7, ADJUSTMENTS AND CALIBRATION.

14. Press Esc to exit the calibration table and display the Calibration menu.

4.8 SECONDARY MODE-TO-PRIMARY MODE CALIBRATION

Purpose

Use this procedure to calibrate the Secondary-mode results to ensure they match the Primary-mode results.

Tools/Supplies Needed

ATTENTION: If the whole-blood specimen and results from the Primary-mode reproducibility check are not available, do the Verifying Reproducibility in the Primary Mode procedure under Heading 4.5, REPRODUCIBILITY CHECKS, and save the specimen and results for use with this procedure.

- ❑ Service Disk
- ❑ The normal, whole-blood specimen used for the Primary-mode reproducibility check and the results obtained from that check.

Procedure

1. Activate the service options as directed under Heading 4.2, USING THE SERVICE DISK.
2. From the Service Options menu, select **Secondary Mode Cal**.
3. Press F3 to select the Secondary mode. The System Status field displays *SEC MODE CAL ON* when ready.
4. In the reference value fields, enter the mean value for each parameter (WBC, RBC, Hgb, MCV, Plt and MPV) from the Primary-mode reproducibility check printout. Press Enter after each entry.
5. In the Secondary mode, run eleven samples of the whole-blood specimen used in the Primary-mode reproducibility check:
   a. Mix and uncap the fresh, normal whole-blood specimen.
   b. Immerse the aspirator tip in the specimen and press the sample bar.
   c. Repeat steps a and b for a total of 11 times.
6. Ensure that the New Cal Factors displayed are within the limits specified for the Secondary mode in Table A.1-1, Acceptable Cal Factor Ranges.
7. Select the parameters to be calibrated:
   a. Press F5 **Optns**.
   b. Select **Select Parameters**.
   c. Set YES for parameters that need calibration, NO for the others. Use the Spacebar to switch between YES and NO.
   d. Press Esc.
8. Select **Transmit Factors** to transmit the new factors. If the optional Graphic Printer is installed, when prompted press Spacebar to answer YES and then press Enter to print the data.

   Note: If a Graphic Printer is not installed, record the data. When you transmit the new calibration factors, the calibration batch table is deleted and the OLD CAL Fac field displays the new, current calibration factors.

9. If you did this procedure as part of installation, attach the printout (or record the data) on the Installation Test Data Log Sheets as directed in Verifying the Secondary Mode - to - Primary Mode Calibration, step 2, under Heading 3.7, ADJUSTMENTS AND CALIBRATION.
10. Repeat steps 5 through 6 for five whole blood cycles to verify calibration.
11. Compare the mean values obtained in the Secondary mode to the reference values. They should be within the limits specified in Table A.1-12, Secondary Mode-to-Primary Mode Comparison Limits.
12. If you did this procedure as part of installation, print out the verification data and attach the printout (or record the data) on the Installation Test Data Log Sheets as directed in Verifying the Secondary Mode - to - Primary Mode Calibration, step 3, under Heading 3.7, ADJUSTMENTS AND CALIBRATION.
13. Press Esc F9 to return to the Main menu.

4.9 VCS OPTIMIZATION

Purpose

Many factors can affect blood results obtained using VCS technology. You use this procedure to optimize the instrument-related factors, thereby minimizing the impact of factors beyond Coulter's control, such as specimen handling and environmental problems.

Figure 4.9-1 Optimization Procedure Flow

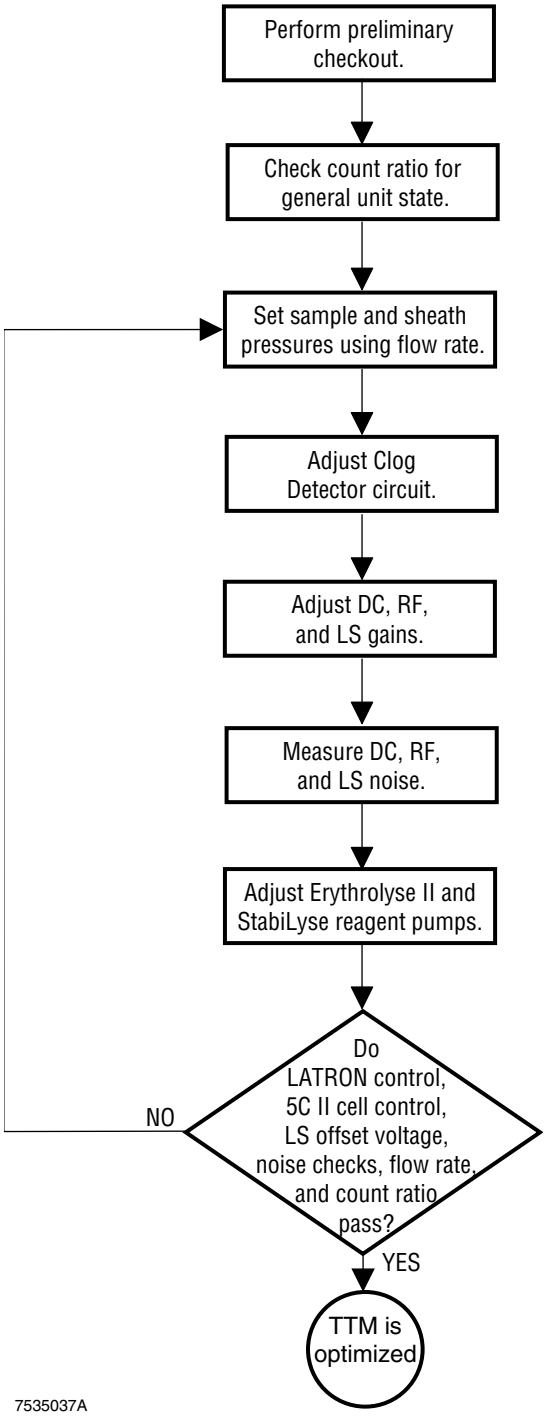

Perform this procedure whenever you replace a VCS technology component, which includes:

- Flow cell
- LS sensor
- RF Detector Preamp card
- RF Power Supply
- RF transformer
- LS Preamp module
- Laser REF 2 card
- Laser Power Supply.

The overall VCS Optimization procedure is further divided into nine procedures. Figure 4.9-1 shows the recommended procedure flow for VCS optimization; Table 4.9-1 gives the purpose of each procedure and lists the tools and supplies needed. You should be completely familiar with the entire VCS Optimization procedure before you begin.

The procedures within the VCS Optimization procedure are presented linearly because that is the simplest way to approach them. Because of the close interrelationship of many of the adjustments however, that approach does not always work. For example:

- You cannot successfully align the TTM if the flow rate is incorrect, or if there is excess noise on one of the channels. Therefore, you must correct any grossly misadjusted items before attempting the overall optimization.
- After you have completed certain adjustments, you may have to go back and redo, or at least fine tune, previous adjustments.

Tools/Supplies Needed

See Table 4.9-1.

Table 4.9-1 Purpose of VCS Optimization Procedures

Perform…	To Ensure…	Tools/Supplies Needed
A. Preliminary Checks	No obvious fluidic or electronic sources of noise.	
B. Count Ratio Check	Overall performance of instrument is good.	❑ Service Disk
C. VCS Flow-Rate Adjustment	Sheath and sample pressures are set for accurate, precise flow through flow cell aperture.	❑ LATRON primer, PN 7546915 ❑ LATRON control, PN 7546914 ❑ Service Disk ❑ Fresh, normal, whole blood (if adjustments are needed)
D. Clog Detector Circuit Adjustment	Clog Detector circuitry detects clogs and starts an "autoclearing" cycle when it does.	❑ Digital voltmeter ❑ Thermometer accurate to ±1°F or ±0.5°C
E. RF Detector Preamp Card C1 Adjustments	Minimum noise on RF channel.	❑ True RMS meter ❑ Latex particles DC/RF, PN 6605419
F. DC, RF, and LS Gains Adjustments	DC, RF, and LS gains are set for optimum positioning of WBC subpopulations on the scatterplot.	❑ Service Disk ❑ Latex particles DC/RF, PN 6605419 ❑ LATRON primer, PN 7546915 ❑ LATRON control, PN 7546914
G. DC, RF and LS Noise Measurements	Minimum noise on the DC, RF, and LS channels.	❑ True RMS meter
H. Erythrolyse II and StabiLyse Reagent Pumps Volume Adjustments	Reagent volumes used produce a final dilution with conductivity and osmolality needed to achieve best count ratio and cell positioning.	❑ ACCUVETTE II® vial or equivalent ❑ Service Disk ❑ Volumetric Cylinder, PN 5415374 ❑ Normal whole blood specimen mixed for at least 30 minutes before using. See the Specimen Collection section of the Operator's Guide for anticoagulant and storage specifications. ❑ 5C Normal cell control with 5C II cell control Assay Sheet
I. Verification	Static and dynamic noise in both Diff and Retic modes are within acceptable limits. Instrument is performing to specifications.	❑ LATRON primer, PN 7546915 ❑ LATRON control, PN 7546914 ❑ 5C Normal cell control with 5C II cell control Assay Sheet ❑ Normal whole-blood specimen mixed for at least 30 minutes before using. See Specimen Collection section of the Operator's Guide for anticoagulant and storage specifications.

A. Preliminary Checks

1. Run a Startup cycle.
2. Check the TTM area for leaks.
3. Check the sheath lines, flow cell, and Erythrolyse II and StabiLyse reagent pumps and tubing for trapped bubbles.
4. Ensure that the interconnecting electrical cables within the TTM are properly dressed and connected.
5. Ensure that the LS amplifier output signal cable, the braided grounding strap, and the green grounding wire:
   - Have smooth radius bends.
   - Do not prevent the laser base mount assembly from floating freely.
6. Ensure that the base mounts are intact and that the TTM assembly "floats" freely.

B. Count Ratio Check

1. Access the Service Disk software as directed in Using the Service Disk Software on a DMS under Heading 4.2, USING THE SERVICE DISK.
2. Display the count ratio data in the Histogram mode.

   Note: The Histogram mode gives a better view of the data than the Sequential mode.
3. Determine if the count ratio for the instrument is acceptable.

   Note: On instruments that are properly optimized and that analyze primarily normal samples, the count ratio should be >7750 on >90% of the samples. See Figure 4.9-2 and Figure 4.9-3 for an example of a good and a poor count ratio.

Figure 4.9-2 Histogram of Good Count Ratio Data

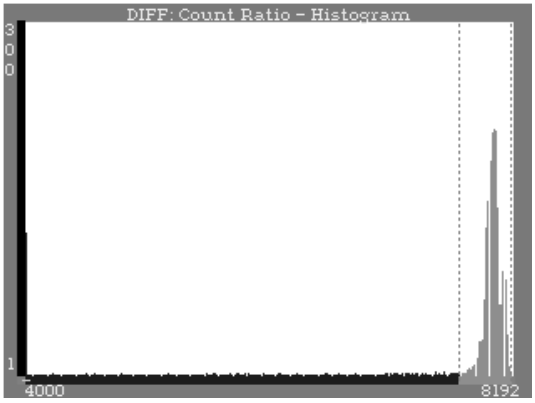

Figure 4.9-3 Histogram of Poor Count Ratio Data

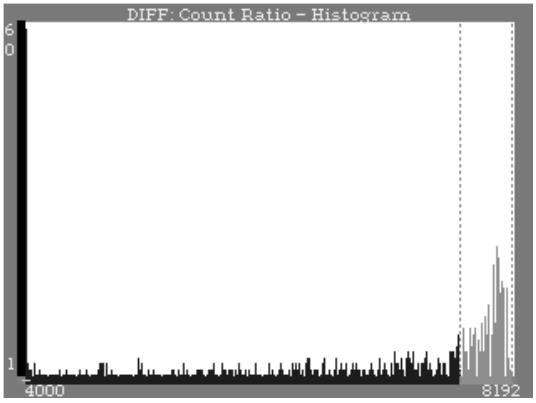

4. If the count ratio is not acceptable, resolve the problem before continuing. Any of the following can adversely affect the count ratio:
   - Incorrect gain settings
   - Electronic noise from any of the VCS components
   - Reagent conductivity noise due to sheath/sample imbalance (pump volumes)
   - Lysing noise from improper RBC lysing

- Incorrect flow rate and/or flow noise from partial plugs or bubbles
- Mechanical failures
- High incidence of abnormal specimens
- Specimen mishandling
- Extreme temperatures.

Note: If the count ratio is still poor after you have performed this optimization procedure, the most likely cause is sample handling/preparation problems.

C. VCS Flow-Rate Adjustment

Set the sample and sheath pressures as directed under Heading 4.10, VCS FLOW-RATE ADJUSTMENT.

D. Clog Detector Circuit Adjustment

Adjust the Clog Detector circuit as directed in Clog Detector Circuit Adjustment under Heading 4.11, RF DETECTOR PREAMP CARD ADJUSTMENTS.

E. RF Detector Preamp Card C1 Adjustments

Adjust C1 on the RF Detector Preamp card as directed in C1 Adjustment under Heading 4.11, RF DETECTOR PREAMP CARD ADJUSTMENTS.

F. DC, RF, and LS Gains Adjustments

Adjust the DC, RF, and LS gains as directed in Diff and Retic Latex Calibration and Verification under Heading 4.4, LATEX CALIBRATION AND VERIFICATION.

G. DC, RF and LS Noise Measurements

Verify the DC, RF, and LS noise levels are minimal as directed in Diff and Retic RMS Noise Checks under Heading 4.12, RMS NOISE CHECKS.

H. Erythrolyse II and StabiLyse Reagent Pumps Volume Adjustments

Adjust the Erythrolyse II reagent and StabiLyse reagent pumps as directed in Erythrolyse II and StabiLyse Reagent Pumps Adjustment under Heading 4.16, ERYTHROLYSE™ II AND STABILYSE™ REAGENT PUMPS ADJUSTMENT AND REPLACEMENT.

I. Verification

1. Verify the static noise and the dynamic noise in the Diff and Retic modes are within acceptable limits as directed in Diff and Retic RMS Noise Checks under Heading 4.12, RMS NOISE CHECKS.
2. Run 5C Normal cell control and ensure that 5C II cell control parameters are within limits.
3. From the Main menu of the DMS, select **Special Functions ▸▸ Calibration ▸▸ Reproducibility**. Empty the file.

4. Set the oscilloscope:

Input	Ch. 1
Impedance	1M DC
Vertical	200 mV/div.
Horizontal	0.5 mS/div.
Synch	Auto - Ch. 1

5. Connect the scope to the DC channel on the VCS PROCESSOR card.
6. Run one whole blood prime sample.
7. Run five samples of a fresh, well mixed whole-blood specimen.
8. During count, look at the DC channel's conductivity (baseline) and ensure that the conductivity:
   - Does not exceed 200 mV peak-to-peak.
   - Does not change from run-to-run.

   Note: The mixing chamber, Erythrolyse II reagent pumps, and StabiLyse reagent pump are possible causes of these failures.
9. Check the scatterplots for good separation in each run. That is:
   - In DF1 the LY and MO populations are separated from the NE population, the NE population is centered in its region and the LY population is fairly well rounded and well defined.
   - The LS histogram has a deep valley.
10. If you have problems with diff and retic flagging and you did not align the laser and flow cell as part of VCS optimization, align the laser and flow cell now as directed under Heading 4.15, LASER/FLOW CELL ALIGNMENT.
11. Verify instrument performance:
    a. Do a Start Up or System Test.
    b. Check reproducibility as instructed under Heading 4.5, REPRODUCIBILITY CHECKS.
    c. Run controls.

4.10 VCS FLOW-RATE ADJUSTMENT

Purpose

You set the sample and sheath pressures to ensure that sufficient data is accumulated on abnormally low WBC specimens, which in turn ensures that the diff parameters are accurate and that the throughput criterion is met.

This procedure uses the Diff: Flow Rate graph of the database to set the sample flow. The Diff: Flow Rate graph is the product of the WBC count and the five-part diff count time and is a relatively constant measurement because samples with a high concentration of WBCs are counted faster than samples with a low concentration.

The flow rate is adversely affected by partial or full plugs in the aperture of the flow cell.

Tools/Supplies Needed

- ❑ LATRON primer, PN 7546915
- ❑ LATRON control, PN 7546914
- ❑ Service Disk
- ❑ Fresh, normal, whole blood specimen with a WBC between 4,000 and 10,000 (if adjustments are required)

Sheath Pressure Adjustment

1. Activate the service options as directed under Heading 4.2, USING THE SERVICE DISK.
2. From the Service Options menu, select **Latex Checks ▸▸ Diff Latex Calibration**.
3. Run one sample of LATRON primer and one sample of LATRON control in the Diff mode.
4. Note the CV for DC.
5. Adjust the sheath pressure regulator and run LATRON control until you obtain the minimum CVs for DC.

   Tip: Using an oscilloscope, monitor the DC output on the VCS PROCESSOR card during the cycle for reduction of the amplitude variation (lower CVs).

Sample Pressure Adjustment

1. If the database is empty, run five specimens with a normal WBC (5.0 - 10.0) as patient samples under Sample Analysis so that they go into the DMS database.
2. Access the current Service Disk's software options as directed in Using the Service Disk Software on a DMS under Heading 4.2, USING THE SERVICE DISK.
3. Look at the Diff: Count Ratio and Diff: Flow Rate graphs of the database.
   - If the count ratio is good (>90% >7750 when most of the samples are normal) and the majority of data points on the flow-rate graph are within limits, go to Verification.
   - If the count ratio is poor, correct that problem before setting the flow rate. See B. Count Ratio Check under Heading 4.9, VCS OPTIMIZATION.

- If the majority of the data points on the Diff: Flow Rate graph are not between the limits, like the example shown in Figure 4.10-1, check the standard deviation (the spread) of the data points.

  Note: Standard deviation refers to the amount of deviation from the mean; the greater the spread of the data points, the higher the standard deviation.

  - If the standard deviation is low, go to step 4.
  - If the standard deviation is high, go to step 5.

Figure 4.10-1 Unacceptable Flow-Rate Graph

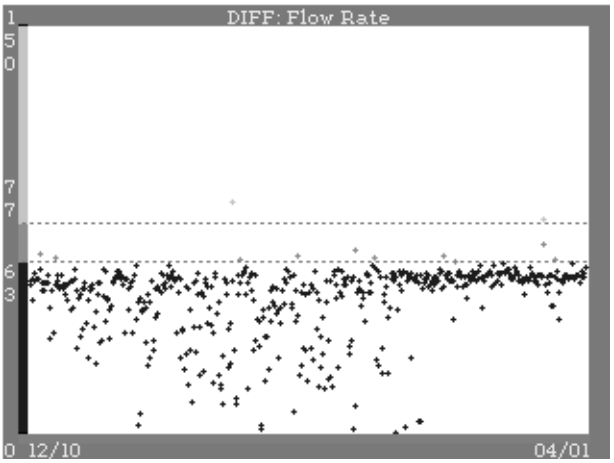

This instrument had flow-rate problems.

The cause of the high standard deviation appears to have been resolved about two thirds of the way through the data.

The sample pressure still appears to be too high, however, since the last data points, while tight, are too low.

ATTENTION: A pressure regulator setting is more stable if you adjust the regulator from a low setting to a high setting. To ensure maximum stability when you need to adjust the pressure down, over adjust the pressure down and then adjust it back up.

4. If the standard deviation of the data points is low:
   a. Adjust the sample pressure.
   b. Run several whole blood specimens with a normal WBC count (5.0 - 10.0) as patient samples under Sample Analysis so that they go into the DMS database.
   c. Ensure that sample and sheath pressures do not vary more than 0.02 psi during *COUNT*.
   d. Check the position of the last data points on the flow-rate graph.
   e. Repeat steps a through d until the data points fall within the limits.
   f. Verify the instrument is working correctly. Go to Verification.
5. If the standard deviation of the data points is high, check the sample population for abnormal WBCs.

   Note: Abnormal WBC populations can widen the dispersion of data points on the flow-rate graph.
6. If the sample population has abnormal WBCs and that is the cause of the high standard deviation:
   a. Run several normal samples as patient samples under Sample Analysis so that they go into the DMS database.
   b. Adjust the sample pressure as described under step 4.

7. If the sample population for WBCs is mostly normal, or if you determine the high standard deviation is not the result of analyzing abnormal WBC samples, find and correct the problem.

   Troubleshooting Tip: Use a digital pressure meter to determine if the sheath and sample pressure readings are correct.

8. Verify the instrument is working correctly. Go to Verification.

Verification

1. Verify that the sheath and sample pressures are within the limits specified in Table A.1-13, Pressure and Vacuum Tolerances.
2. If you did this procedure as part of installation, no further verification is needed at this time. Print out five patient scatterplots displaying DC count and time and attach the printouts to the Installation Test Data Log Sheets as directed in Verifying the DC Count and VCS Flow Rate, step 2, under Heading 3.7, ADJUSTMENTS AND CALIBRATION.
3. If you did this procedure as part of the VCS Optimization procedure, continue with that procedure. Go to Clog Detector Circuit Adjustment under Heading 4.11, RF DETECTOR PREAMP CARD ADJUSTMENTS.
4. Verify instrument performance:
   a. Do a Start Up or System Test.
   b. Check reproducibility as instructed under Heading 4.5, REPRODUCIBILITY CHECKS.
   c. Run controls.

4.11 RF DETECTOR PREAMP CARD ADJUSTMENTS

Purpose

Use the following procedures after replacing the RF Detector Preamp card or the RF Detector Preamp vacuum tube, and as part of VCS optimization.

- Use the Clog Detector Circuit Adjustment procedure to adjust the Clog Detector circuit for the ambient temperature of the laboratory to compensate for small, temperature related changes in diluent flow through the flow cell.
- Use the C1 Adjustment procedure to obtain the lowest RMS noise value in the entire 360-degree range of C1.

In addition, check the Clog Detector Circuit Adjustment:

- As part of instrument installation.
- After replacing the -
  - Flow cell
  - Flow-cell harness
  - RF Power Supply.
- Whenever the instrument reports an abnormal number of FC errors (about 5% of all samples generate an FC error).

Clog Detector Circuit Adjustment

Tools/Supplies Needed

- ❑ Digital voltmeter
- ❑ Diluent for cycling
- ❑ Thermometer accurate to ±1°F or ±0.5°C

Procedure

1. From the Main menu, select **Sample Analysis ▸▸ Run Samples**.
2. Ensure DIFF is ON.
3. Press F2 **Start Primary**. The instrument processes the request and displays *S/A 1 °MODE ON* in the lower right corner (System Status field) of the DMS.
4. Disable the blood/bubble detector (**Main ▸▸ Special Functions ▸▸ Diagnostics ▸▸ Operator Options ▸▸ BSV Tests ▸▸ Blood Detector**).
5. Set the digital voltmeter to VOLTS DC and connect it across TP1 and TP4 (ground) on the RF Detector Preamp card.
6. Measure the voltage at TP1 while cycling diluent in the Primary mode. Record the peak voltage reading obtained immediately after the RF aperture current is turned ON.
7. With the thermometer, measure and record the ambient room temperature.

8. Calculate and record the voltage for TP2 using the appropriate formula below:

   Vtp2 = ({[(Taf - 55) x 0.01] + 1} x Vtp1) + 0.225

   or

   Vtp2 = ({[(Tac - 12.8) x 0.018] + 1} x Vtp1) + 0.225

   where:

Vtp1 =	Voltage at TP1
Vtp2 =	Voltage at TP2
Taf =	Ambient temperature Fahrenheit
Tac =	Ambient temperature Centigrade

9. Adjust R44 on the RF Detector Preamp card to set the voltage at TP2 to the voltage calculated in step 8 ±0.05 V.
10. Disconnect the digital voltmeter.
11. Disconnect the RF cable from J67 and run a sample of diluent. Ensure that the clog detector is triggered and the instrument goes through an "Auto-Clearing" cycle.
12. Reconnect the RF cable.
13. If you did this procedure as part of VCS optimization, go to C1 Adjustment. If not, go to Verification below.

Verification

1. If you adjusted the Clog Detector circuit as part of installation, no further verification is needed at this time. Record the results on the Installation Test Data Log Sheets as directed in Adjusting the Clog Detector Circuit, step 2, under Heading 3.7, ADJUSTMENTS AND CALIBRATION.
2. Verify instrument performance by checking reproducibility as directed under Heading 4.5, REPRODUCIBILITY CHECKS.

C1 Adjustment

Tools/Supplies Needed

- ❑ True RMS meter
- ❑ Service Disk
- ❑ Diluent for cycling
- ❑ LATEX PARTICLES DC/RF, PN 6605419

Procedure

1. Connect a true RMS meter to the RF (C) channel on the VCS PROCESSOR card.
2. At the Analyzer:
   a. Verify that the Diff mode is enabled.
   b. Activate the service options as directed in Heading 4.2, USING THE SERVICE DISK.

c. From the Service Options menu, select **Latex Checks ▸▸ Diff Latex Calibration** to display the Diff Calibration screen.

ATTENTION: It may be necessary to aspirate more than one sample of diluent while making adjustments. If the sample runs out, check for bubbles in the flow cell and perform a purge if necessary.

3. Cycle a sample of diluent in the Diff-Latex Calibration mode.

ATTENTION: Between count periods the RMS noise will increase. Ensure readings are taken during the count periods.

4. While the system is in count observe the RMS voltage.

ATTENTION: Use a plastic Trimmer Pot Tool to adjust C1 on the RF Detector Preamp card to eliminate the interference caused by a metal shaft.

5. Using a plastic Trimmer Pot Tool, make slight adjustments to C1, moving through the entire 360 degree range. After each adjustment allow the voltage to settle. This will take time and a lot of patience. Note the lowest reading.
6. Adjust C1 to the lowest RMS value noted in step 5.
7. Verify the gain adjustment is correct. Go to Verification below.

Verification

1. If you did this procedure as part of VCS optimization, continue with that procedure. Go to Diff and Retic Latex Calibration and Verification under Heading 4.4, LATEX CALIBRATION AND VERIFICATION.
2. To verify that the RF channel gain is correct, prepare and cycle the LATEX PARTICLES DC/RF as directed in the product insert for the latex particles, and ensure the results meet the specifications listed on the product insert.

4.12 RMS NOISE CHECKS

Purpose

This section includes two procedures for checking noise.

- Use the CBC RMS Noise Checks procedure to ensure the noise on the RBC, WBC, and Plt channels is within specifications.
- Use the Diff and Retic RMS Noise Checks procedure to ensure the static noise and dynamic noise on the DC, RF, and LS channels are within specifications.

CBC RMS Noise Checks

Tools/Supplies Needed

- ❑ True RMS meter

Procedure

1. Check the instrument and ensure:
   - The instrument is ON but not performing any cycles.
   - The RBC and WBC baths are filled.
   - The apertures are primed.
2. Close all the instrument doors and panels to prevent outside noise interference.
3. Using a true RMS meter, read the test points on the R/W/P PROC card.
   a. Open the upper front door of the Main Unit and connect the negative lead to the ground on the R/W/P PROC card.
   b. With the positive lead, read the RBC, WBC and PLT test points, closing the door before taking each reading to prevent outside noise interference.
4. Ensure the noise level readings for RBC, WBC and PLT are within the limits specified in Table A.1-4, RMS Noise Checks - CBC.
5. Close the upper front door of the Main Unit.
6. If you measured the RMS noise on the CBC channels as part of installation, record the results on the Installation Test Data Log Sheets as directed in Measuring the RMS Noise, step 2, under Heading 3.7, ADJUSTMENTS AND CALIBRATION.

Diff and Retic RMS Noise Checks

Tools/Supplies Needed

- ❑ Service Disk
- ❑ True RMS meter
- ❑ Diluent for cycling

Procedure

1. Ensure the instrument is in the Diff-Latex Calibration mode. (From the Service Options menu, select **Latex Checks ▸▸ Diff Latex Calibration**.)
2. Press F3 **Secondary**.

3. Ensure all the instrument doors and panels are closed to prevent outside noise interference.
4. While the instrument is idle, use a true RMS meter to measure the RMS noise for the DC, RF, and LS channels on the VCS PROCESSOR card.
   a. Open the upper front door of the Main Unit and connect the negative lead to the ground on the VCS PROCESSOR card.
   b. With the positive lead, read the V (DC), C (RF), and S (LS) test points, closing the door before taking each reading to prevent outside noise interference.
5. Ensure that the noise for each of the channels does not exceed the limits given for the static conditions listed in Table A.1-20, Noise Checks - Diff and Retic.

ATTENTION: Dirt, debris or bubbles increase the noise readings. Ensure that the sample is clean and the system is free of bubbles.

6. Cycle a clean sample of diluent in the selected Latex Calibration mode.
7. While the instrument is counting, measure the RMS noise for DC, RF, and LS channels on the VCS PROCESSOR card.
8. Ensure that the noise for each of the channels does not exceed the limits given for the dynamic conditions listed in Table A.1-20, Noise Checks - Diff and Retic.
9. Measure the static and dynamic noise in the Retic mode:
   a. Change the Latex Calibration mode to Retic-Latex Calibration mode. (From the Service Options menu, select **Latex Checks ▸▸ Retic Latex Calibration**.)
   b. Press F3 **Secondary**.
   c. Repeat steps 4 through 8 in the Retic-Latex Calibration mode.
10. Close the upper front door of the Main Unit.
11. If any of the static or dynamic noise measurements are out of specifications, correct the problem. Go to Heading 7.3, DC, RF, OR LS NOISE PROBLEMS.
12. If you measured the RMS noise on the Diff and Retic channels as part of installation, record the results on the Installation Test Data Log Sheets as directed in Measuring the RMS Noise, step 4, under Heading 3.7, ADJUSTMENTS AND CALIBRATION.
13. If you measured the RMS noise on the Diff and Retic channels as part of VCS optimization, continue with that procedure.

    ATTENTION: You check RMS noise on the Diff and Retic channels twice during VCS optimization, before and after checking the volumes of the Erythrolyse II reagent and StabiLyse reagent pumps.

    - If you are doing this noise check **before** checking the volumes of the Erythrolyse II reagent and StabiLyse reagent pumps, check those volumes now as directed under Heading 4.16, ERYTHROLYSE™ II AND STABILYSE™ REAGENT PUMPS ADJUSTMENT AND REPLACEMENT.
    - If you are doing this noise check as the first step in verifying instrument operation **after** checking the volumes of the Erythrolyse II reagent and StabiLyse reagent pumps, continue with the verification procedure. Go to I. Verification, step 2, under Heading 4.9, VCS OPTIMIZATION.

4.13 FLOW-CELL CLEANING

Purpose

Perform this procedure:

- Before performing the LASER/FLOW CELL ALIGNMENT procedure, to ensure that the flow-cell aperture is clean and free of debris.
- When the LS Offset voltage is failing specifications in the Diff or Retic mode.
- When the LS CV% is failing specifications in the Diff or Retic mode.

Note: A dirty flow cell can also contribute to problems with NE RLS Mean, NE RLS SD, NE PVR, and LATRON control mean and mean-to-mode.

Tools/Supplies Needed

- ❑ Isopropyl alcohol (ChromAR), analytical grade 99.5% purity or better, PN 1606138

ATTENTION: Use **lint-free** paper or gauze to avoid contaminating the alcohol with dust.

- ❑ **Lint-free** paper or gauze
- ❑ Applicator stick, PN 2527713
- ❑ Tamperproof screwdriver, PN 5415219
- ❑ Tape, Scotch type or masking

Procedure

WARNING Risk of personal injury. The laser beam can cause eye damage if viewed either directly or indirectly from reflective surfaces (such as a mirror or shiny metallic surface). To avoid accidental exposure to the laser beam while cleaning the flow cell, always turn off the instrument before doing this procedure.

1. Power down the instrument as directed in Power Down/Power Up the System under Heading 4.1, GUIDELINES FOR SERVICING THE HmX ANALYZER.
2. Using the tamperproof screwdriver, carefully remove the screws that hold the laser flow-cell cover.
3. Check for leakage around the flow cell aperture area. If a leak exists replace the flow cell.
4. Remove the flow-cell shield from the flow cell and place it in a clean area while cleaning the flow cell.
5. Secure a piece of transparent tape on the front of the lens-block assembly to avoid splashing into the lens.

WARNING Personal injury from broken glass. Breaking off the tip of the ampule of alcohol without protecting your fingers could lead to cuts from broken glass. Cover the ampule with lint-free paper or gauze to protect your fingers when opening the ampule.

6. Cover the ampule of alcohol with **lint-free** paper or gauze to protect your fingers and break off the tip.

Figure 4.13-1 Wetting Applicator with Alcohol

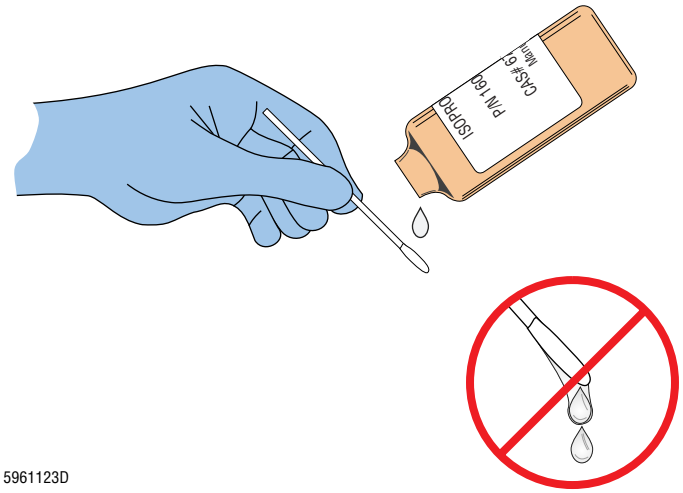

CAUTION Alcohol can soften the paint used on the flow cell, permanently damaging the flow cell. To avoid damaging the flow cell, ensure the applicator stick does not contact the painted surfaces of the flow cell and do not reuse the applicator stick.

7. Carefully moisten the applicator tip with isopropyl alcohol without over saturating it (Figure 4.13-1).

Figure 4.13-2 Wiping Front of Flow Cell

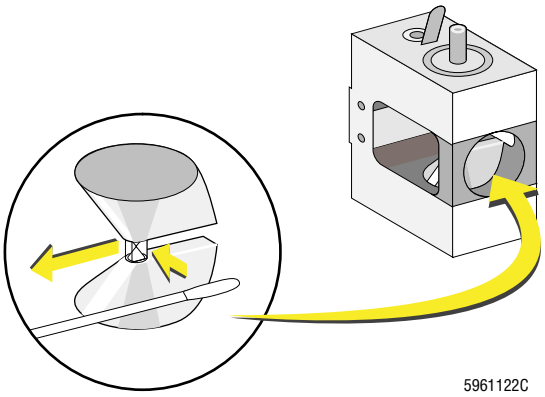

8. Place the applicator tip flat on the front of the flow-cell aperture and pull it out toward the outside of the instrument (in a one-way motion only). See Figure 4.13-2.

Figure 4.13-3 Wiping Rear of Flow Cell

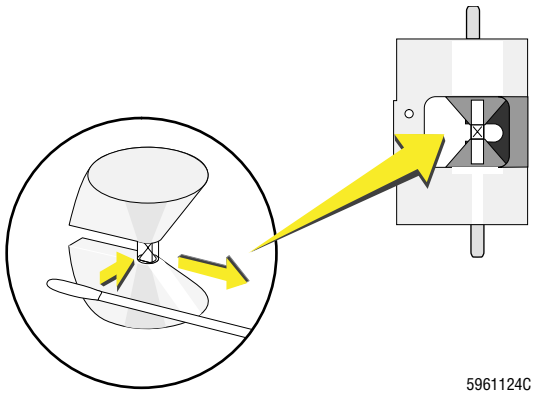

9. Obtain a new applicator stick and repeat step 7.
10. Place the applicator flat on the rear of the flow-cell aperture and pull it out toward the outside of the instrument (in a one-way motion only). See Figure 4.13-3.
11. Also clean the side of the flow-cell aperture facing the outside of the instrument.
12. Repeat steps 7 through 11 if necessary.
13. Remove the tape from the lens block and install the shield back onto the flow cell.
14. Power up the instrument.
15. Check for correct alignment of the scattered beam on the sensor's mask.
16. Verify the instrument is working correctly. Go to Verification.

Verification

1. If you cleaned the flow cell as part of the laser/flow cell alignment procedure, no additional verification is needed. Leave the laser flow-cell cover off and go back to Heading 4.15, LASER/FLOW CELL ALIGNMENT.
2. Reinstall the laser flow-cell cover.
3. Check the LS offset voltage as directed in LS Offset Voltage Check under Heading 4.23, VOLTAGE CHECKS AND ADJUSTMENTS.
4. Verify instrument performance:
   a. Do a Start Up or System Test.
   b. Check reproducibility as instructed under Heading 4.5, REPRODUCIBILITY CHECKS.
   c. Run controls.

4.14 LENS BLOCK CLEANING

Purpose

ATTENTION: Replace any field-cleaned lens block assembly as soon as possible.

Use this procedure only as the last step if you are unable to achieve the LS specifications when performing the TTM alignment procedure. Processes for assembling this lens block assembly have been optimized to ensure contamination of the lens surface does not occur, but once contaminated, cleaned lenses do not stay clean long. Replace a field-cleaned lens block assembly as soon as possible.

Tools/Supplies Needed

- ❑ Lens paper, PN 3814123
- ❑ Analytical grade acetone (1 ppm), PN 1615361
- ❑ Tamperproof screwdriver, PN 5415219
- ❑ Powderless gloves

Procedure

CAUTION Powder and skin oils will damage the lenses. Clean your hands with an alcohol prep pad or wash them with soap and water before performing this procedure. Wear powder-free gloves to prevent skin oils from coming in contact with the lens surfaces.

WARNING Risk of personal injury. The laser beam can cause eye damage if viewed either directly or indirectly from reflective surfaces (such as a mirror or shiny metallic surface). To avoid accidental exposure to the laser beam while cleaning the lens block, always turn off the instrument before doing this procedure.

1. Power down the instrument as directed in Power Down/Power Up the System under Heading 4.1, GUIDELINES FOR SERVICING THE HmX ANALYZER.
2. Using the tamperproof screwdriver, carefully remove the screws that hold the laser flow-cell cover.
3. Remove the hardware securing the lens block to the TTM.
4. Place a new sheet of lens paper on a clean surface.
5. Cut another piece of lens paper about the same width as the lens or slightly smaller.
6. Carefully loosen the lens cover screws. Loosen the screws 1/4-turn at a time to prevent breaking the lens.
7. Remove the lenses from the block and place them on the new piece of lens paper.
8. Holding one of the lenses in gloved hand, drape the cut piece of lens paper over the lens and drop one drop of acetone near the edge of the lens onto the lens paper.
9. Slide the lens paper off the lens slowly sideways, dragging the drop of acetone to the side of the lens.
10. Drape the same lens paper over the opposite side of the lens and drag it across the lens as in step 9 above.
11. Look at the acetone drop to verify complete evaporation. If the lens surface remains wet with acetone, continue dragging lens paper until lens is dry.

ATTENTION: Do not use compressed air to remove dust particles because moisture and propellant in the air may contaminate the lens surface, defeating the cleaning process.

12. Look at the cleaned lens surface from the side to determine if all contamination has been removed. If it has not:
    a. Remove dust particles with an aperture brush.
    b. If any contamination remains, repeat the cleaning procedure for the surface once.
    c. If the second cleaning does not remove the contamination, replace the lens block assembly.
13. Carefully place the lens in the lens block.

CAUTION Tightening the screws incorrectly damages the lens cover. Tighten the screws alternately to prevent warping the lens cover. Do not overtighten.

14. Carefully install the lens cover and install the screws. Tighten the screws until the cover just touches the lens. Continue tightening the screws alternately 1/4-turn at a time.
15. Repeat the procedure for the other lens.
16. Once both lenses have been cleaned, install the lens block in the TTM.
17. Power up the instrument.

ATTENTION: If after completion of the LASER/FLOW CELL ALIGNMENT procedure, the instrument fails the Diff and Retic Latex Calibration and Verification procedure for LS, replace the lens block and repeat the LASER/FLOW CELL ALIGNMENT procedure.

18. Align the laser/flow cell and verify instrument performance as directed under Heading 4.15, LASER/FLOW CELL ALIGNMENT.

4.15 LASER/FLOW CELL ALIGNMENT

Purpose

Use this procedure when you cannot obtain acceptable LS results during diff and retic latex calibration.

Like the overall VCS procedure, the laser/flow-cell alignment procedure is further divided into several procedures and you may have to work back and forth, repeating adjustments, until all measurements fall within specifications. See Figure 4.15-1.

Figure 4.15-1 Laser/Flow-Cell Alignment Work Flow

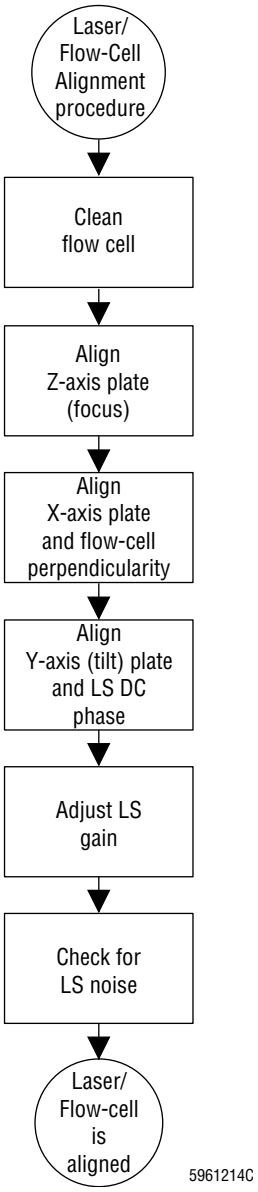

The goal is to achieve:

- Minimum lLS offset voltage.
- Minimum LATRON CVs.
- Minimum LATRON mean-to-mode difference.
- NE RLS Mean assay value on 5C II cell control.
- Maximum NE peak-to-valley ratio on whole blood and NE peak within 5C assay limits.
- Correct scatterplot distribution and population positioning for 5-part diff and retics.
- Correct alignment of mechanical characteristics of TTM assembly.

ATTENTION: If you encounter problems performing the laser/flow-cell alignment procedure, ensure the following components are the current revision level.

- Flow cell, coated (black painted)
- Light shield
- LS sensor
- Y-axis (tilt) plate (flow-cell mounting plate)
- Lens block
- Horizontal bolt plate.

Tools/Supplies Needed

- ❑ 20 MHz dual-trace oscilloscope
- ❑ Z-axis gauge, PN 5401245
- ❑ Tamperproof screwdriver, PN 5415219
- ❑ LATRON control, PN 7546914
- ❑ Light Shield, PN 5401269
- ❑ White paper

Flow-Cell Cleaning

ATTENTION: Always ensure the flow cell is clean before aligning the laser and the flow cell.

Perform the flow-cell cleaning as instructed under Heading 4.13, FLOW-CELL CLEANING.

Flow-Cell Z-Axis (Focus) Alignment

1. Set the oscilloscope:

Input	Ch. 1 and Ch. 2
Impedance	1M DC
Vertical	500 mV/div.
Horizontal	5 microseconds/div.
Synch	Normal - Ch. 1

2. Connect Channel 1 of the scope to the DC (V) channel on the VCS PROCESSOR card.
3. Connect Channel 2 of the scope to the LS (S) channel on the VCS PROCESSOR card.

ATTENTION: Torquing the lock-down screws without shifting the adjustment is very technique dependent.

4. Loosen, then torque, all alignment lock-down screws, the lens-block screws and the laser-mount screws. See Figure 4.15-2 for location of the screws. To torque the screws correctly:
   a. Grip the wrench by the knurled portion of the handle. Failure to do so will cause improper torque.
   b. Tighten each screw sequentially, 1/32 to 1/16 turn each time, until torqued.
5. Loosen each set of lock-down screws (X, Y and Z - Figure 4.15-2, C, D, E, F, G, H, I) equal amounts and just enough to allow adjustments to each axis.
6. To adjust the Z-axis to its preliminary setting, place the 1.360 focus side of the Z-axis gauge between the center of the tilt plate and the center of the lens block as shown in Figure 4.15-2 and turn the Z-adjust screw (Figure 4.15-2, A) until the gauge just fits.
7. Set up a DMM to measure the LS offset voltage.
   a. Set the DMM to measure volts.
   b. Connect the DMM to TP1 and TP3 on the LS Preamp 5 module.

Figure 4.15-2 Flow-Cell Z-Axis Alignment

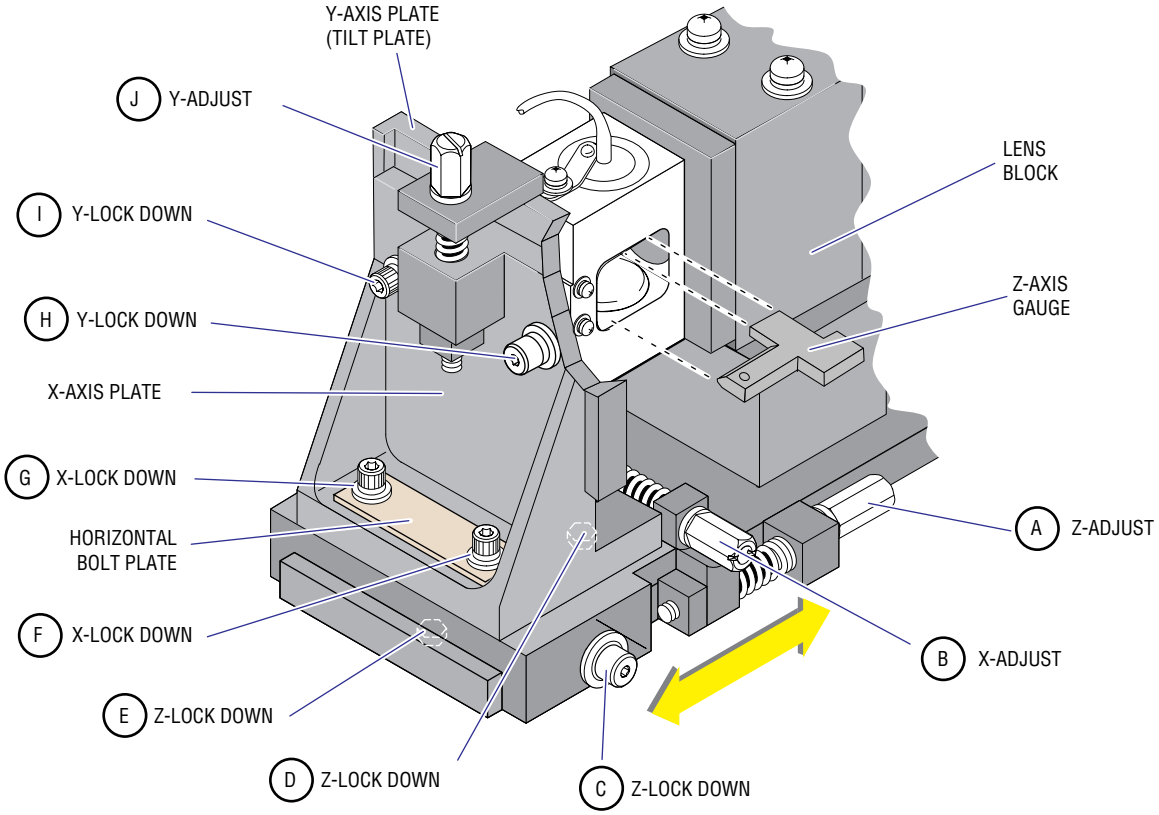

Note: The Y-LOCK DOWN screws (H and I) may look different depending on the revision level of the hardware.

5961281D

8. Cycle a sample of LATRON control in the Diff-Latex Calibration mode.
9. Adjust X- and Y-adjust screws (Figure 4.15-2, B and J) to obtain an LS pulse on the scope.
10. Remove the flow cell cover, shine a light on the LS sensor and ensure that the scattered laser beam is centered vertically on the sensor's mask and that it is free of dust or other foreign material. See Figure 4.15-3.

Figure 4.15-3 Scatter Sensor Laser Diffraction

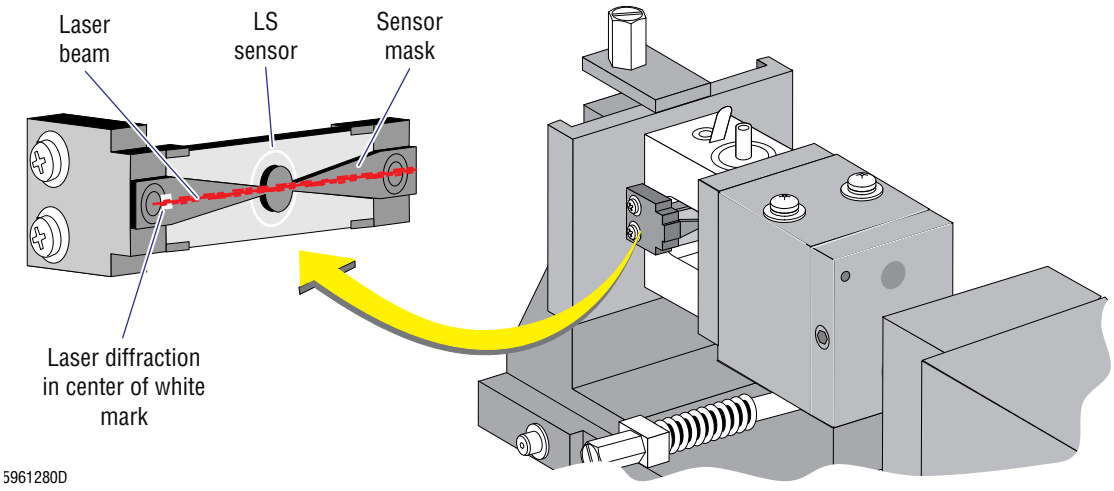

11. Reinstall the flow-cell cover.
12. Using the X- and Y-adjust screws, fine tune the X-axis for maximum LS amplitude with minimum variations; then turn the Y-adjust screw until you achieve minimum lLS offset voltage.
13. Note the lLS offset voltage.
14. Turn the Z-adjust screw clockwise 1/4 to 1/2 turn.
15. Repeat steps 12 through 14.
    - If the offset voltage decreases, continue repeating steps 12 through 14 until the offset voltage starts to increase.
    - If the offset voltage increases, turn the Z-adjust screw counterclockwise to set the XY assembly past the preliminary setting, then repeat steps 12 through 14.
16. Select **QUIT** to stop the LATRON control flow through the flow cell.
17. Torque the Z-lock down screw C (refer to Figure 4.15-2), then loosen it again. This squares up the XY assembly before final torquing of the Z-axis.
18. Tighten each Z-lock down screw (Figure 4.15-2, C, D, E) sequentially, a little at a time, until torqued.

Flow-Cell X- and Y-Axis Plate Alignment

1. Cycle a sample of LATRON control in the Diff-Latex Calibration mode.
2. Using the X- and Y-adjust screws (Figure 4.15-4, B, J), fine tune the X-axis for maximum LS amplitude with minimum variations; then adjust the Y-axis screw until you achieve minimum LS Offset Voltage.

ATTENTION: When torquing the Y-(vertical) lock down screws, a SLIGHT change in alignment is acceptable at this time, but you must ensure that it does not change drastically.

3. Torque the Y-lock down screws (Figure 4.15-4, H, I).
4. Remove the flow-cell cover and the lens-block assembly.

Figure 4.15-4 Flow-Cell X- and Y-Axis Plate Alignment

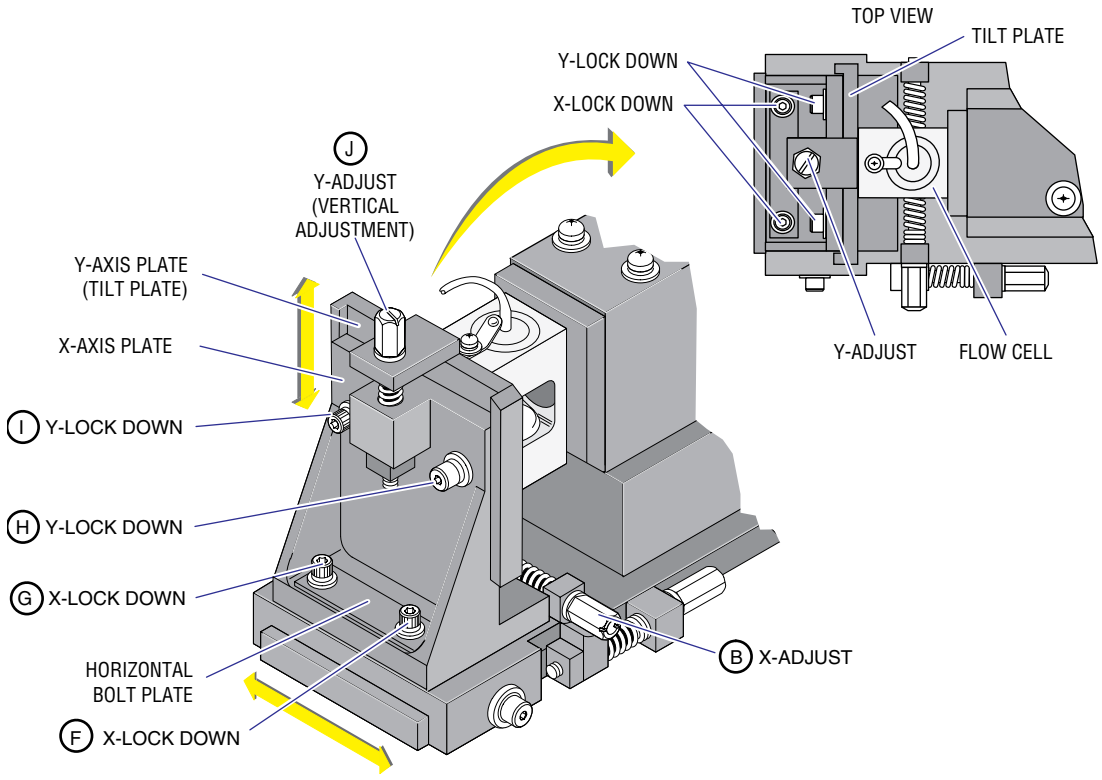

Note: The Y-LOCK DOWN screws (H and I) may look different depending on the revision level of the hardware.

5961282D

5. Remove the light shield from the flow cell and insert the special light shield.
6. Pull the light shield out and adjust its position until the laser's main beam just touches the far side of the hole and the reflected beam is at its brightest. Ensure the laser's reflected beam is centered on the vertical white line directly below the main beam. See Figure 4.15-5.
   a. If the reflected beam is not centered, loosen and then retorque the Z-lock down screws (refer to Figure 4.15-2, D, E).
   b. If the reflected beam cannot be aligned, ascertain which parts are defective, replace the parts and perform the laser alignment procedure from the beginning.
7. Without shifting the reflected beam off the vertical white line, tighten each X-(horizontal) lock-down screw (refer to Figure 4.15-4, F, G) sequentially, a little at a time, until they are torqued.
8. Remove the special light shield from the flow cell and reinstall the regular light shield.
9. Reinstall the lens-block assembly on its positioning pin on the laser mount and torque into place.
10. Visually realign the flow cell.
11. Reinstall the flow-cell cover.

Figure 4.15-5 Laser Reflected Light Beam with Special Light Shield Installed

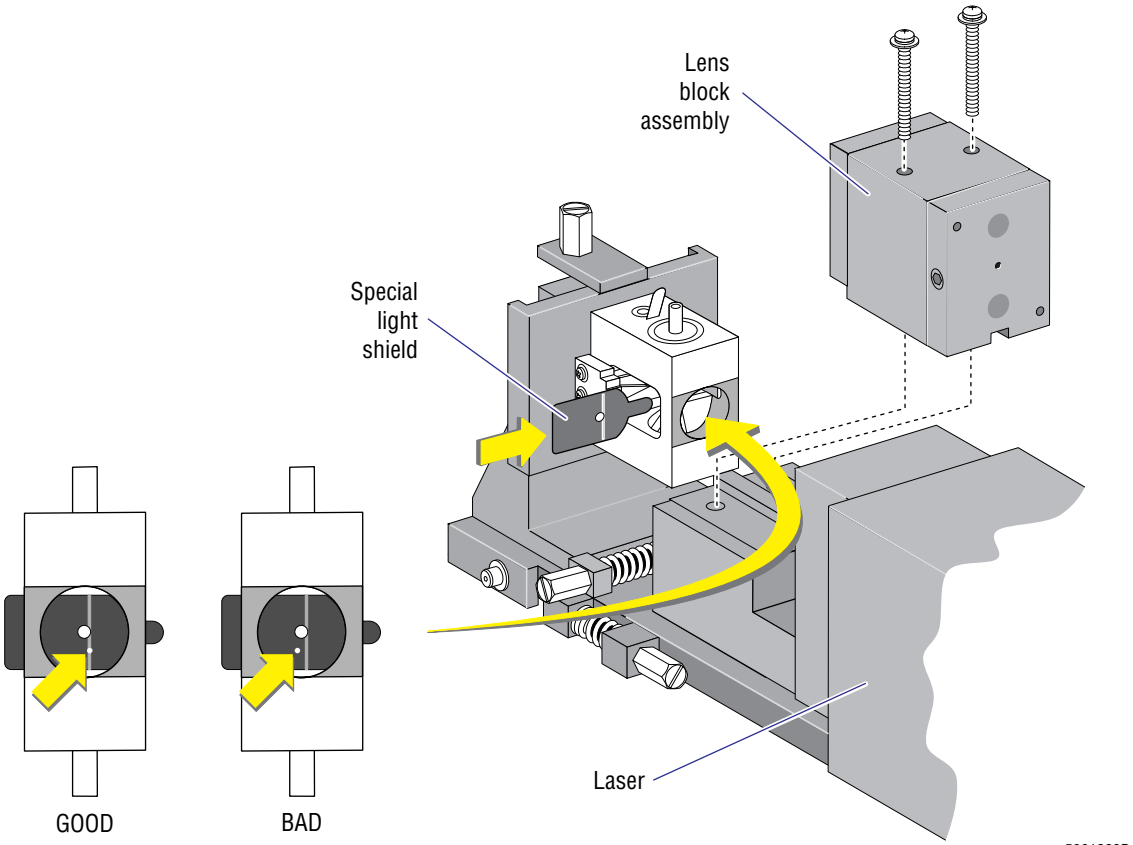

Flow-Cell Y-Axis Final Alignment

ATTENTION: This is the final step in the physical alignment of the laser to the flow cell. Alignment of Y-axis (tilt) plate affects the LS offset voltage, LATRON CVs and mean-to-mode, and 5C II cell control NE RLS MN and NE PVR. You may need to readjust the X- or Z-axis plates to find the best alignment of the Y-axis plate.

1. Loosen the Y-(vertical) lock down screws (Figure 4.15-4, H, I) just enough to allow the Y-axis (tilt) plate to be adjusted.
2. Adjust the Y-(vertical) adjust screw (Figure 4.15-4, J) for minimum LS offset Voltage.
3. Without shifting the laser alignment, tighten each Y-lock down screw (Figure 4.15-4, H, I) sequentially, a little at a time, until the screws are torqued.
4. Verify that the LS offset voltage is still within range.
5. It the LS offset voltage is not within range:
    a. Reclean the flow cell as directed under Heading 4.15, LASER/FLOW CELL ALIGNMENT and realign the TTM as directed in this section.
    b. Replace the flow cell and realign the TTM as directed in this section.
    c. Replace the lens block and realign the TTM as directed in this section.
    d. As a last resort if a new lens block is not immediately available, clean the current lens block as directed under Heading 4.14, LENS BLOCK CLEANING and realign the TTM.

6. Run a LATRON control in the Diff-Latex Calibration mode. Verify that:
   a. LS CVs are within range. If not, realign the X-axis; go to Flow-Cell X- and Y-Axis Plate Alignment.
   b. LS Mean-to-Mode differences are within range. If not -
      1) Check for noise, leaks, bubbles or contamination.
      2) If the problem persists, replace the flow cell.
7. Remove the flow-cell cover, shine a light on the LS sensor and ensure that the scattered laser beam is centered vertically on the sensor's mask. Refer to Figure 4.15-3.
8. Slide a white piece of paper between the flow cell's aperture and the LS sensor. Ensure that the diffracted laser beam is a fine line without any vertical lines and that the cones are minimized. See Figure 4.15-6.

Figure 4.15-6 Laser Diffraction Pattern on Paper

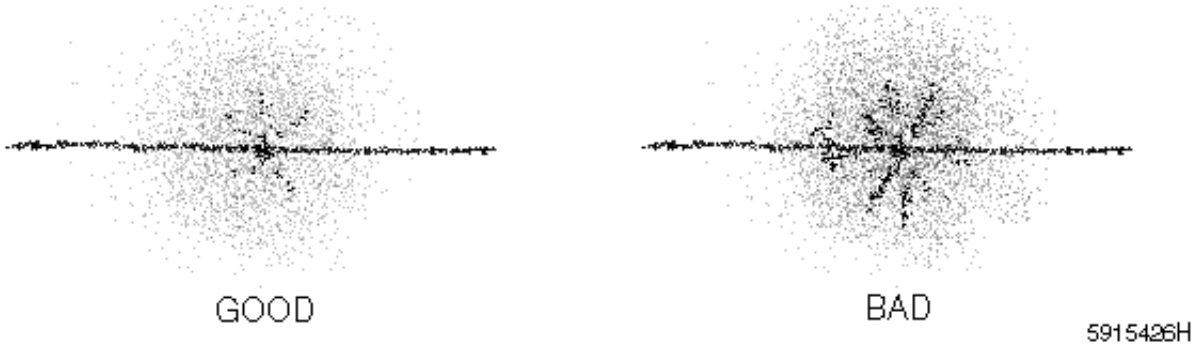

9. Remove the paper, ensuring that no lint is left behind.
10. Reinstall the flow-cell cover and secure it with its mounting screws.
11. If the laser alignment shifts after tightening the flow-cell cover, check the following for proper fitting:
    - Screws holding the laser to the base plate
    - Coaxial cable
    - Flow-cell tubing bracket
    - Flow-cell cover

Verification

Verify the RF, DC and LS gains settings are correct. Go to Diff and Retic Latex Calibration and Verification under Heading 4.4, LATEX CALIBRATION AND VERIFICATION.

4.16 ERYTHROLYSE™ II AND STABILYSE™ REAGENT PUMPS ADJUSTMENT AND REPLACEMENT

Erythrolyse II and StabiLyse Reagent Pumps Adjustment

Purpose

The adjustment of the Erythrolyse II and StabiLyse reagent pumps optimizes count ratio and cell positioning by varying the conductivity and osmolality of the final dilution.

The count ratio can be degraded by a mismatch between the conductivity of the sheath fluid (diluent) and the conductivity of the sample stream (blood + Erythrolyse II reagent + StabiLyse reagent) in the flow cell. See Figure 4.16-1. You can vary the conductivity of the sample by changing the volume of Erythrolyse II and StabiLyse reagents in the dilution. Varying the StabiLyse reagent pump volume has a greater affect on the final sample conductivity than varying the Erythrolyse II reagent pump by the same volume.

Figure 4.16-1 Match Sheath Fluid to Sample Stream Conductivity

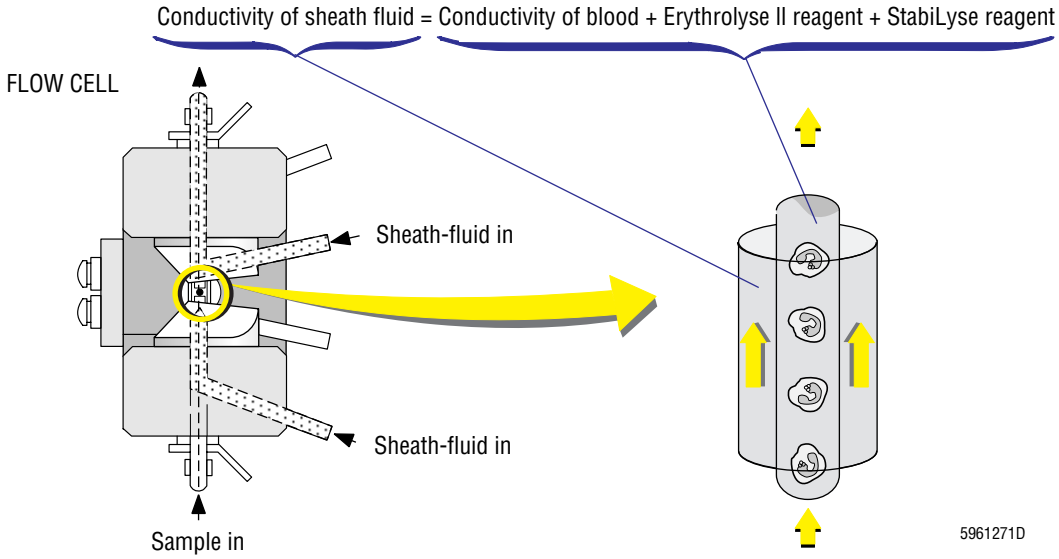

The correct positioning of cell populations within the VCS "cube" is dependent upon the osmolality of the dilution. Varying the Erythrolyse II reagent pump volume varies the osmolality of the dilution.

Figure 4.16-2 Effect of Dilution Conductivity on Count Ratio

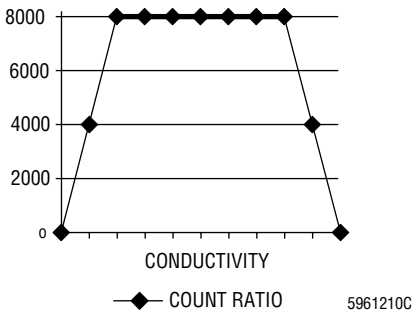

In the following procedure:

- To obtain the best **count ratio**, adjust the StabiLyse reagent pump volume until you obtain the center value of the count ratio plateau. See Figure 4.16-2.

Figure 4.16-3 Effect of Osmolality on NE DC mean

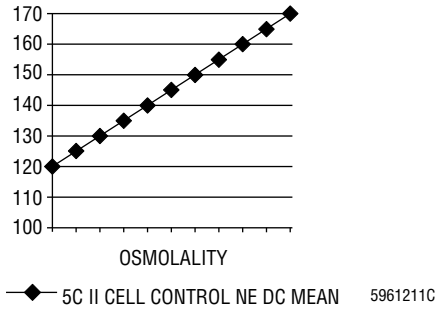

- To obtain the best **cell positioning**, adjust the Erythrolyse II reagent pump volume until you obtain the 5C II Normal cell control assay value for the NE DC Mean. See Figure 4.16-3.

Note: Reagent "potency" due to aging and temperature also affects conductivity and cell positioning. This procedure optimizes the instrument to the current reagents and temperature.

Since count ratio and cell positioning are both affected by the volume of the Erythrolyse II reagent and the StabiLyse reagent pumps, you must adjust both pumps back and forth until you find the ideal settings for both. Figure 4.16-4 is a flow diagram for optimizing the pump adjustments.

Tools/Supplies Needed

- ❑ ACCUVETTE II vial or equivalent
- ❑ Service Disk
- ❑ Volumetric Cylinder, PN 5415374
- ❑ Normal whole blood specimen mixed for at least 30 minutes before using. See the Specimen Collection section of the customer's Operator's Guide for anticoagulant and storage specifications.
- ❑ 5C Normal cell control with 5C II cell control assay sheet (if available)

Figure 4.16-4 Erythrolyse II Reagent and StabiLyse Reagent Pump Optimization Flow Diagram

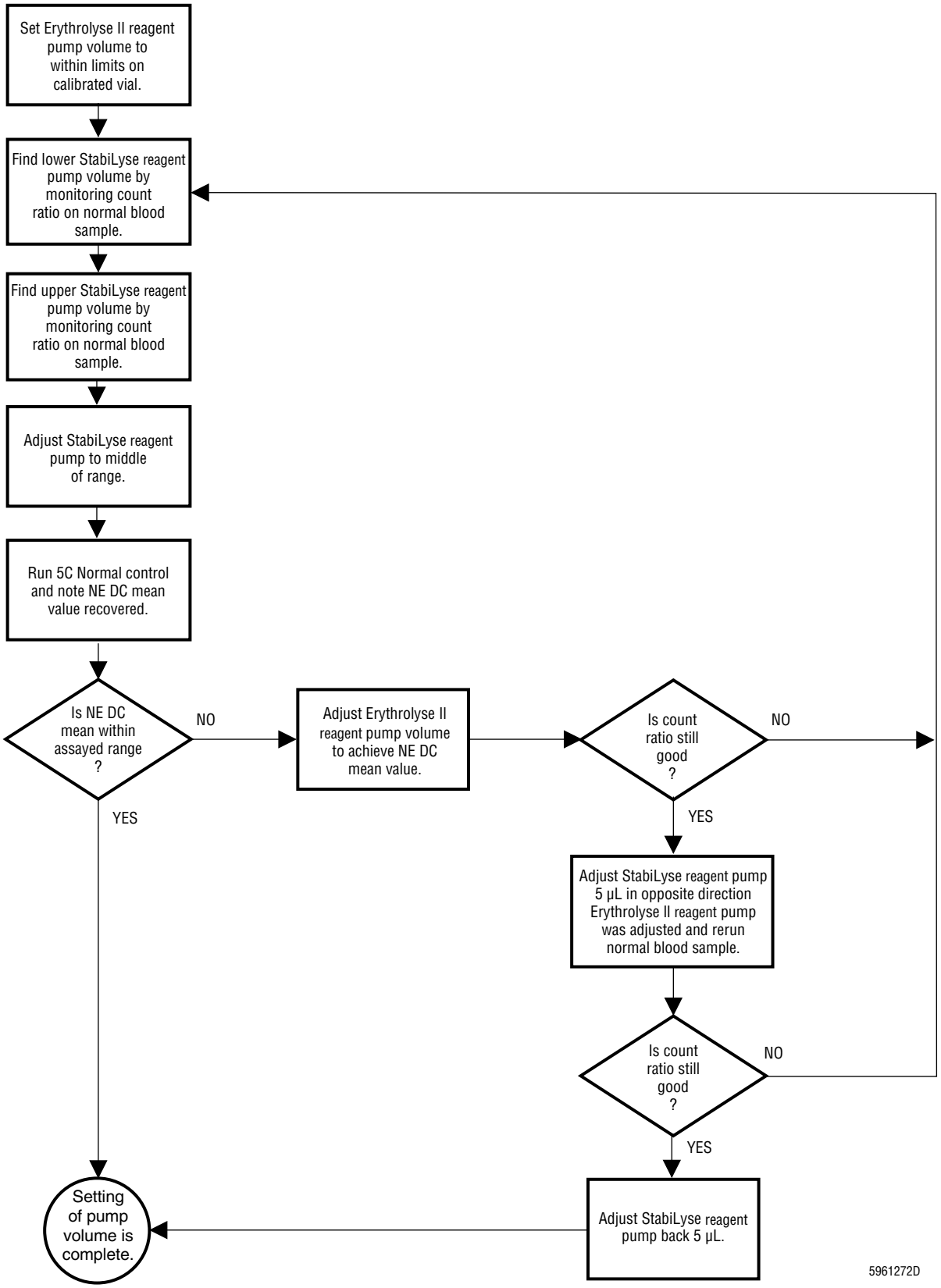

Adjusting the Erythrolyse II Reagent Pumps Volume

Figure 4.16-5 Tubing from Mixing Chamber

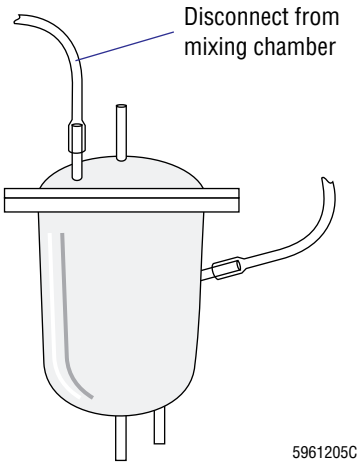

1. Disconnect the Erythrolyse II reagent tubing from the mixing chamber. See Figure 4.16-5.
2. Place the tube into an ACCUVETTE II vial.
3. From the Service Options menu, select **Solenoid Test ▸▸ F5 Cycles ▸▸ Erythrolyse Pump Dispense** to activate the Erythrolyse II reagent pumps. Ensure the tubing is primed with Erythrolyse II reagent.
4. Touch the tube against the side of the vial to remove the drop from the end then remove the tube from the vial.

Figure 4.16-6 Volumetric Cylinder Calibration Marks

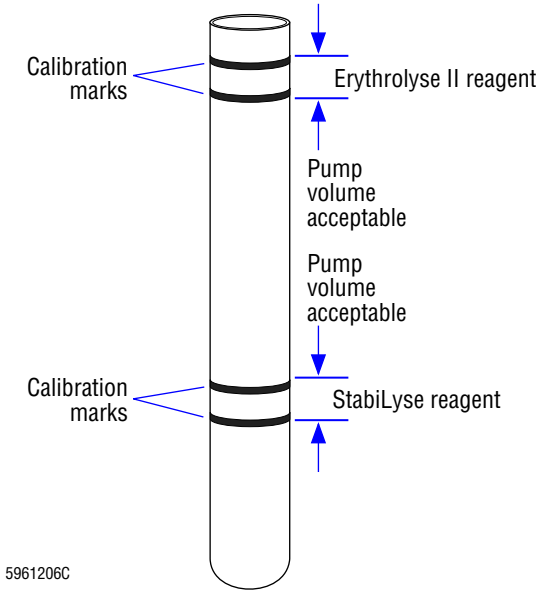

5. Place the tube in the Volumetric Cylinder.
6. From the Service Options menu, select **Solenoid Test ▸▸ F5 Cycles ▸▸ Erythrolyse Pump Volume Test (X5)** to activate the Erythrolyse II reagent pumps five times, dispensing Erythrolyse II reagent five times into the Volumetric Cylinder.
7. Hold the Volumetric Cylinder in a vertical position and ensure that the meniscus is between the minimum and maximum markings for Erythrolyse II reagent. See Figure 4.16-6.

Figure 4.16-7 Reading the Meniscus

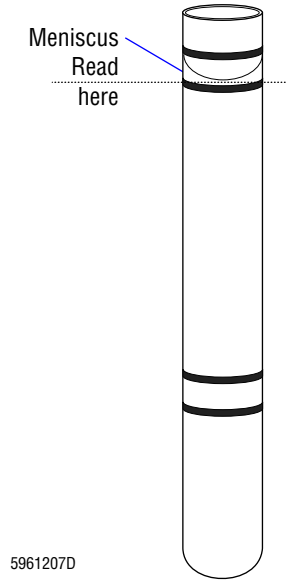

8. Take the reading at the bottom of the meniscus as shown in Figure 4.16-7.

Figure 4.16-8 Diaphragm Pump Adjustment

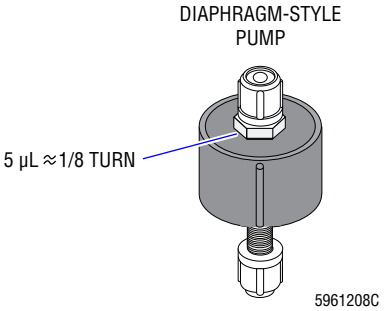

9. If the meniscus is not between the markings:
   a. Adjust the pump. See Figure 4.16-8.

      Note: Two Erythrolyse II reagent pumps are used to dispense the total reagent volume. You can adjust either pump to change the volume.

      ATTENTION: After each measurement, empty the Volumetric Cylinder and dry with a cotton swab.

   b. Empty and dry the Volumetric Cylinder.
   c. Repeat steps 2 through 8.
10. Reattach the tubing disconnected from the mixing chamber in step 1.

Adjusting the StabiLyse Reagent Pump Volume

ATTENTION: An example of analyzing data to determine the StabiLyse reagent pump adjustment follows this procedure. Refer to the example if you need clarification on analyzing the data.

1. Use the Service Disk to obtain enhanced printouts as directed in Activating the DMS Service Options under Heading 4.2, USING THE SERVICE DISK.
2. Run a sample of the well-mixed (30 minutes) normal whole-blood specimen as a patient sample under Sample Analysis so that it goes into the DMS database and record the count ratio.

   Note: To make data analysis easier, record the information in a table like the one shown in the example box that follows.

3. Decrease the StabiLyse reagent pump volume in 5-µL increments (refer to Figure 4.16-8), running blood and recording the count ratio after each adjustment, until the count ratio begins to degrade.
4. Return the pump volume to its original setting.
5. Increase the StabiLyse reagent pump volume in 5-µL increments, running blood and recording the count ratio after each adjustment, until the count ratio begins to degrade again.
6. Referring to the example box below as needed, determine the final pump adjustment:
   a. Find the amount the pump volume was decreased before count ratio degradation. (Minimum)
   b. Find the amount the pump volume was increased before count ratio degradation. (Maximum)
   c. Add the values from step a and step b and divide the sum by two.

$$\frac{\text{Minimum} + \text{Maximum}}{2} = \text{Adjustment}$$

7. Adjust the pump back to the maximum pump volume where the count ratio was still good. Then adjust the pump down the amount determined in step 6 c.

   Note: The final adjustment of the pump should always be half way between the upper (maximum) and lower (minimum) pump-volume limits where the count ratios are still good.

Determining the StabiLyse Reagent Pump Volume Adjustment, Example Data

Run #	Pump Adjust	Diff from Start	Count Ratio
1	Start	Start	8012
2	↓ 5 µL	↓ 5 µL	8004
3	↓ 5 µL	↓ 10 µL	7997
4	↓ 5 µL	↓ 15 µL	6871
5	↓ 5 µL	↓ 20 µL	3217
6	Return to Start	Start	8117
7	↑ 5 µL	↑ 5 µL	8009
8	↑ 5 µL	↑ 10 µL	7984
9	↑ 5 µL	↑ 15 µL	7989
10	↑ 5 µL	↑ 20 µL	7992
11	↑ 5 µL	↑ 25 µL	5798
12	↑ 5 µL	↑ 30 µL	2087
13	Final Adjust	From Start (Min+Max)/2	8017

1. The amount decreased before count degradation is 10 µL (run #3). [Minimum]
2. The amount increased before count degradation is 20 µL (run #10). [Maximum]
3. (10 µL + 20 µL) ÷ 2 = **15 µL** [(Min)+(Max/2]
4. Adjust the pump volume to ↑ 20 µL from the Start setting, then adjust the volume ↓ **15 µL**. The final setting should be ↑ 5 µL from Start as shown in this figure.

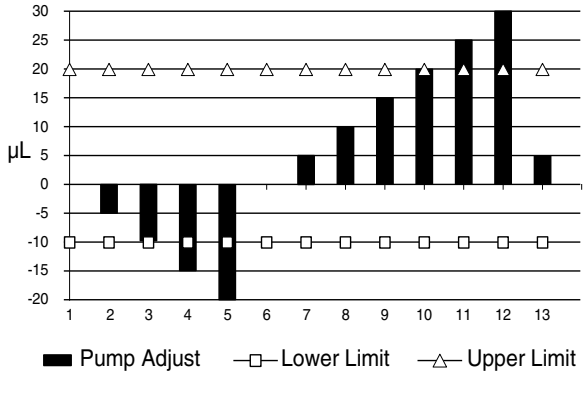

5915414H

Optimizing the Erythrolyse II Reagent Pumps Volume

ATTENTION: Do this procedure as the final adjustment of the Erythrolyse II reagent pumps if 5C Normal cell control assayed for service parameters is available.

1. Use the Service Disk to obtain enhanced printouts as directed in Activating the DMS Service Options under Heading 4.2, USING THE SERVICE DISK.
2. Run 5C Normal cell control in the Primary mode with the bar-code label turned away from the bar-code reader so that the results are stored in the database.
3. Compare the value of the NE DC Mean channel printed on the enhanced printout to the value on the assay sheet.
   - If the value recovered is within the assay range, proceed to Verifying Erythrolyse II and StabiLyse Reagent Pumps Volume Adjustment.
   - If the value recovered is outside the assay range, go to step 4.

ATTENTION: For every channel of NE DC Mean change desired, adjust the pump volume approximately 5 µL. Refer to Figure 4.16-8.

4. Adjust the Erythrolyse II reagent pump, noting the direction and amount of adjustment, then rerun the control.
   - If the value recovered is below the assay range, increase the reagent volume.
   - If the value recovered is above the assay range, decrease the reagent volume.
5. Continue adjusting the Erythrolyse II reagent pump and running the control until the value recovered for NE DC Mean is within the assay range.
6. Check the count ratio.
   - If the count ratio is still acceptable, go to step 8.
   - If the count ratio has degraded as a result of adjusting the Erythrolyse II reagent pump, go to step 7.
7. Readjust the Erythrolyse II reagent and StabiLyse reagent pumps:
   a. Set the Erythrolyse II reagent pump as close as possible to achieving the NE DC Mean assay.
   b. Go back to Adjusting the StabiLyse Reagent Pump Volume, and repeat that procedure using the new Erythrolyse II reagent pump volume as a starting point.
   c. Repeat this procedure, starting at step 2.
8. Adjust the StabiLyse reagent pump volume 5 µL in the opposite direction from the adjustment on the Erythrolyse II reagent pump volume.

   Note: Since the Erythrolyse II reagent volume has some affect on the final dilution conductivity, perform this adjustment to ensure the new volume does not bring the count ratio too close to the edge of the "count ratio plateau."
9. Rerun the normal whole-blood specimen used for setting the StabiLyse reagent pump volume and note the count ratio.
   - If the count ratio is still good (>7750), reset the StabiLyse reagent pump back 5 µL to the original setting. The pump optimization is complete.
   - If the count ratio is degraded, repeat from step 2, starting with the new Erythrolyse II pump setting.

Verifying Erythrolyse II and StabiLyse Reagent Pumps Volume Adjustment

Verify the pump volumes are set for optimal whole blood results as directed in I. Verification under Heading 4.9, VCS OPTIMIZATION.

Erythrolyse II Reagent Pumps Replacement

Erythrolyse II Reagent Pumps Removal

1. Power down the instrument as directed in Power Down/Power Up the System under Heading 4.1, GUIDELINES FOR SERVICING THE HmX ANALYZER.
2. Remove the tubing from both the top and bottom fittings of the Erythrolyse II reagent pumps.
3. Remove the two Phillips-head screws that secure the pumps' mounting bracket to the Pump module's panel (Figure 4.16-9).
4. Remove the pumps.

Figure 4.16-9 Pump Module Mounting Bracket

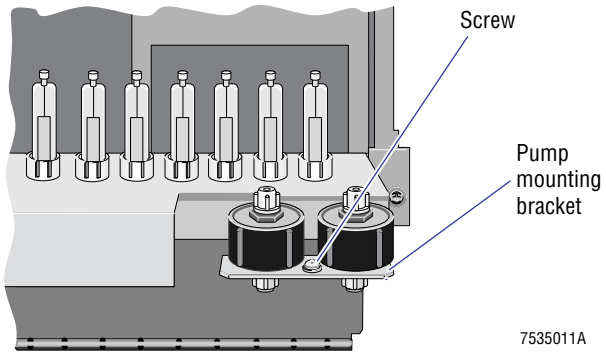

Erythrolyse II Reagent Pump Installation

1. Install the new pumps on the pump mounting bracket.
2. Secure the pump mounting bracket to the Pump module panel with the two Phillips-head screws.
3. Connect the tubing to the top and bottom fittings of the pumps.
4. Power up the instrument.
5. From the Main menu select **Diluter Functions ▸▸ Prime Reagents ▸▸ PAK**, and observe the pump and associated tubing for leaks or bubbles.

IMPORTANT New Erythrolyse II reagent pumps may change the dilution ratios, requiring optimization. Check the volume dispensed by the new pumps.

6. Adjust the volume of the Erythrolyse II reagent pumps and verify that adjustment. Refer to Erythrolyse II and StabiLyse Reagent Pumps Adjustment at the beginning of this section.

4.17 ASPIRATION PUMP VOLUME ADJUSTMENT

Tools/Supplies Needed

- ❑ Enhanced 5C Normal cell control, all levels, or 4C PLUS cell control, Abnormal High and Abnormal Low, if Enhanced 5C cell control is not available
- ❑ Five different whole blood specimens

Procedure

1. In the Primary mode, run a sample of Enhanced 5C **Normal** cell control or 4C PLUS **Abnormal High** cell control.
2. Observe the aspiration line at the front blood/bubble detector BD1-2 (Figure 4.17-1).

Figure 4.17-1 Second Pull (Vacuum)

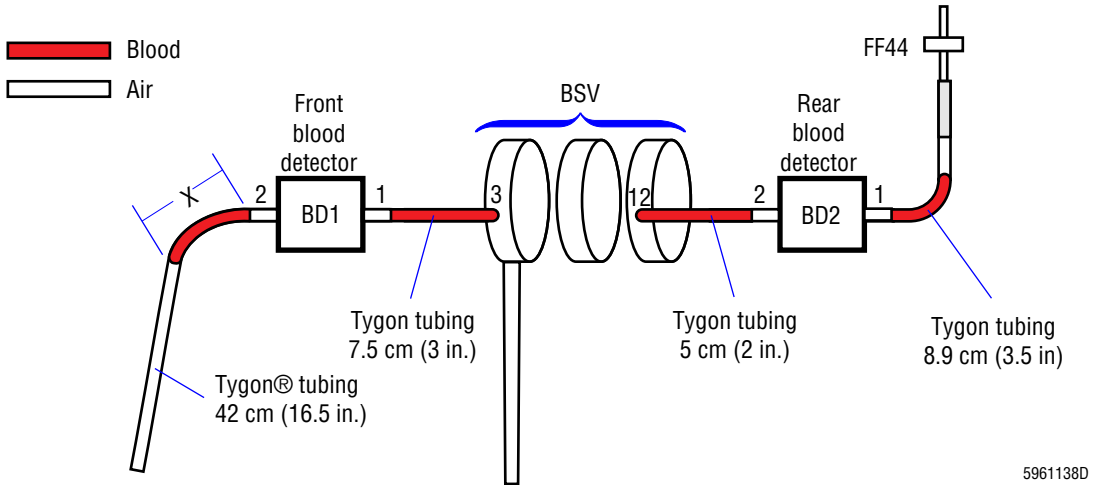

3. Ensure that on the second pull (the vacuum pull) of the sample, the distance **X** between the trailing edge of the sample and the end of the fitting of BD1-2 is within the tolerance specified in Table A.1-24, Aspiration Pump Volume Tolerances.
   - If **X** is within tolerance, go to step 5.
   - If **X** is not within tolerance, adjust the pump. Go to step 4.
4. Adjust the aspiration pump. Turn the top of the pump:
   - Clockwise to decrease the volume [shorten the distance (**X**)]
   - Counterclockwise to increase the volume [lengthen the distance (**X**)].

   Note: When adjusting the pump, rotate the top back and forth a few times while turning to properly seat the pump diaphragm.
5. Repeat steps 1 through 3 four times and verify that any differences between the distance X measurements are within the tolerance specified for replicates in Table A.1-24, Aspiration Pump Volume Tolerances.
   - If the replicate measurements for X are within tolerance, go to step 6.
   - If the replicate measurements for X are not in tolerance, troubleshoot the aspiration system, and repeat pump verification after resolving the problem.

6. Run all levels of control and five different patient specimens and ensure that on the first pull (aspiration pump pull) of the sample, blood does not enter the front blood/bubble detector (Figure 4.17-2). If the blood samples enter the front blood/bubble detector on the first pull:
   - Troubleshoot the aspiration system.
   - Repeat pump verification after resolving the problem.
7. Verify the instrument is working correctly. Go to Verification.

Figure 4.17-2 First Pull (Aspiration Pump))

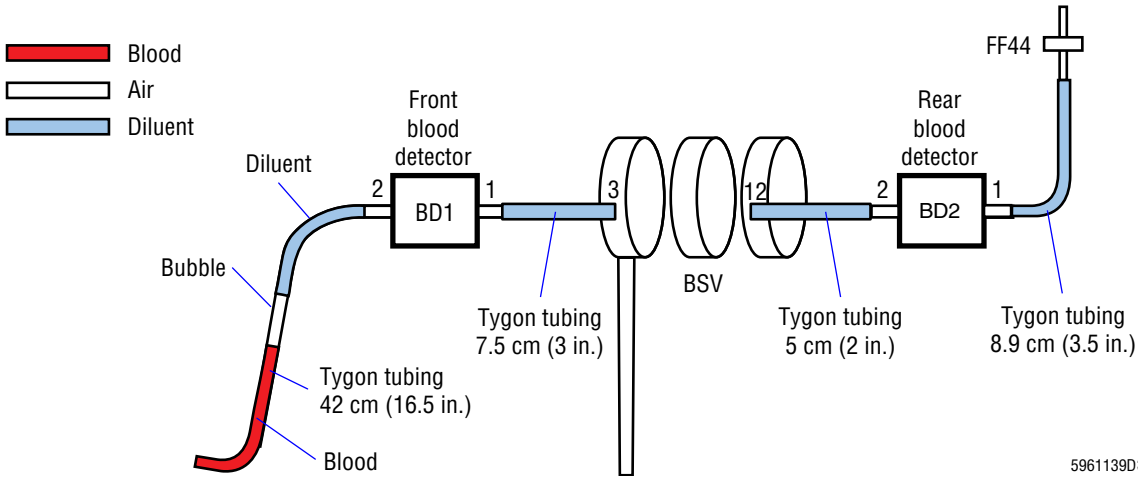

Verification

1. If you did this procedure following replacement of the BSV, check the diluent delivery timing. Go to Heading 4.20, LYTIC REAGENT AND DILUENT DELIVERY TIMING CHECK.
2. If you adjusted the aspiration pump, verify calibration.
   a. Do Heading 4.7, INITIAL ADJUSTMENT OF PRIMARY-MODE CALIBRATION FACTORS.
   b. Advise the customer that you have changed the calibration and that they need to verify calibration of the Primary mode as outlined in the Special Procedures and Troubleshooting manual.
3. Verify instrument performance:
   a. Do a Start Up or System Test.
   b. Check reproducibility as instructed under Heading 4.5, REPRODUCIBILITY CHECKS.
   c. Run controls.

4.18 CBC LYTIC REAGENT PUMPS VERIFICATION

Tools/Supplies Needed

- ❑ ACCUVETTE II vial or equivalent
- ❑ Scale accurate within 0.5 g
- ❑ Clear, polyurethane tubing, 0.082 i.d., PN 3202036

Procedure

1. Weigh a clean, dry, empty vial and record the weight for future reference.
2. Ensure that the CBC lytic reagent pumps are primed.
3. Disconnect the CBC lytic reagent tubing from FF1 by PV1.
4. Connect 15 cm (6 in.) of the clear, polyurethane tubing to FF1.
5. Activate the service options as directed under Heading 4.2, USING THE SERVICE DISK.
6. From the Service Options menu, select **Solenoid Test**.
7. Place the other end of the tubing attached to FF1 into the weighed vial and energize LV4 twelve times to dispense CBC lytic reagent into the vial twelve times.
8. Weigh the vial of CBC lytic reagent and subtract the weight recorded in step 1 to determine the weight of the reagent.
9. Ensure that the weight of the lytic reagent is within the tolerances specified for Volumes, CBC Lytic Reagent Pumps' Volume Tolerance, under Heading A.1, TOLERANCES AND LIMITS.
   - If the weight is not within tolerance, replace both CBC lytic reagent pumps and repeat from step 1.
   - If the weight is within tolerance, go to step 10.
10. Remove the tubing installed in step 4 and reconnect the original tubing at FF1.
11. Prime the lytic reagent.
12. Verify the instrument is working correctly. Go to Verification.

Verification

IMPORTANT Because the CBC lytic reagent pumps measure and dispense the lytic reagent used in the WBC dilutions, changing a CBC lytic reagent pump can affect the instrument results. Always check the CBC lytic reagent delivery timing and the instrument calibration after replacing a CBC lytic reagent pump.

1. If you did this procedure following replacement of a CBC lytic reagent pump, check the CBC lytic reagent and diluent delivery timing. Go to Heading 4.20, LYTIC REAGENT AND DILUENT DELIVERY TIMING CHECK.
2. Verify instrument performance:
   a. Do a Start Up or System Test.
   b. Check reproducibility as instructed under Heading 4.5, REPRODUCIBILITY CHECKS.
   c. Run controls.

4.19 RBC/WBC DILUENT DISPENSERS VOLUME TESTING

Purpose

Use the procedures in this section to test the volume dispensed by the RBC and WBC diluent dispensers, and to adjust the diluent dispensers if necessary. Two methods for determining the volume dispensed are provided, Measuring Diluent by Volume and Measuring Diluent by Weight.

Measuring by volume requires a graduated cylinder; measuring by weight requires a scale. The method you choose depends on which tool is available in your customer's laboratory and personal preference. Measuring by weight is easier because you do not have to read a meniscus like you do when measuring by volume. Measuring by weight is also quicker because you dispense diluent only once instead of the 10 times required for measuring by volume.

The basic procedures for measuring the volumes for the RBC and WBC diluent dispensers are the same. The only differences are:

- The tubing you disconnect (FF26 for the RBC diluent dispenser, FF27 for the WBC).
- The amount of total volume required after dispensing the diluent 10 times (refer to Table A.1-25, Diluent Dispenser Volume Specifications and Tolerances).

Measuring Diluent by Volume

Tools/Supplies Needed

- ❑ Service Disk
- ❑ Hemostats
- ❑ One vial, such as ACCUVETTE® II vial, for waste
- ❑ Graduated cylinder, ≥100 mL
- ❑ Clear, polyurethane tubing, 0.082 i.d., PN 3203036

Procedure

1. Ensure that the instrument and the DMS are ON.
2. Activate the service options as directed under Heading 4.2, USING THE SERVICE DISK.
3. Ensure the graduated cylinder is clean and dry.
4. Ensure the diluent dispensers are primed.
5. Pinch the pressure tubing to the appropriate diluent dispenser (RBC or WBC) with hemostats, as necessary.
6. Disconnect the tubing from the appropriate connection on the CBC module:
   - For the RBC diluent dispenser - FF26.
   - For the WBC diluent dispenser - FF27.
7. Connect 15 cm (6 in.) of tubing to the open connection:
   - For the RBC diluent dispenser - FF26.
   - For the WBC diluent dispenser - FF27.

8. From the Service Options menu, select **Solenoid Test**.
9. Place the other end of the tubing attached to FF26 or FF27 in step 7 into a waste vial, and energize LV35 to prime the tubing with diluent.
10. Move the tubing from the waste vial into the graduated cylinder and energize LV35 10 times to dispense diluent into the graduated cylinder:
11. Determine the volume of the diluent from the position of the meniscus.
12. Verify the diluent volume is within the tolerances listed for Measured by Volume in Table A.1-25, Diluent Dispenser Volume Specifications and Tolerances.

Figure 4.19-1 Reading a Meniscus

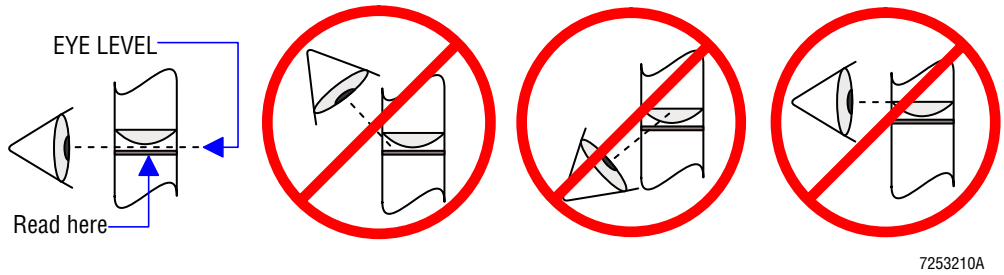

13. If the diluent volume is not within the tolerance, adjust the appropriate diluent dispenser or replace it if necessary, and repeat steps 3 through 11.
14. Disconnect the test tubing from FF26 (RBC diluent dispenser) or FF27 (WBC diluent dispenser) on the CBC module, and reconnect the original tubing:
15. Remove the hemostats installed in step 5.
16. If you want to test both diluent dispensers, repeat steps 3 through 15 for the other diluent dispenser.
17. Verify the instrument is working correctly. Go to Verification.

Measuring Diluent by Weight

Tools/Supplies Needed

- ❑ Service Disk
- ❑ Hemostats
- ❑ Two vials, such as ACCUVETTE II vials
- ❑ Scale accurate within 0.05 g
- ❑ Clear, polyurethane tubing, 0.082 i.d., PN 3203036

Procedure

1. Ensure that the instrument and the DMS are ON.
2. Activate the service options as directed under Heading 4.2, USING THE SERVICE DISK.
3. Weigh a clean, dry, empty vial and record the weight.
4. Ensure that the diluent dispensers are primed.
5. Pinch the pressure tubing to the appropriate diluent dispenser (RBC or WBC) with hemostats, as necessary.

6. Disconnect the tubing from the appropriate connection on the CBC module:
   - For the RBC diluent dispenser - FF26.
   - For the WBC diluent dispenser - FF27.
7. Connect 15 cm (6 in.) of tubing to the open connection:
   - For the RBC diluent dispenser - FF26.
   - For the WBC diluent dispenser - FF27.
8. From the Service Options menu, select **Solenoid Test**.
9. Place the other end of the tubing attached to FF26 or FF27 in step 7 into a waste vial, and energize LV35 to prime the tubing with diluent.
10. Move the tubing from the waste vial into the weighed vial and energize LV35 to dispense diluent into the vial.
11. Weigh the vial of diluent and subtract the weight of the vial recorded in step 3, to determine the weight of the diluent.
12. Verify the diluent weight is within the tolerances listed for Measured by Weight in Table A.1-25, Diluent Dispenser Volume Specifications and Tolerances.
13. If the diluent weight is not within the tolerance, adjust the appropriate diluent dispenser or replace it if necessary, and repeat steps 3 through 11.
14. Disconnect the test tubing from FF26 (RBC diluent dispenser) or FF27 (WBC diluent dispenser) on the CBC module, and reconnect the original tubing:
15. Remove the hemostats installed in step 5.
16. If you want to test both diluent dispensers, repeat steps 3 through 15 for the other diluent dispenser.
17. Verify the instrument is working correctly. Go to Verification.

Verification

IMPORTANT Because the diluent dispensers measure and dispense the diluent used in the RBC and WBC dilutions, changing a diluent dispenser can affect the instrument results. Always check the instrument calibration after replacing an RBC diluent dispenser, and check both the diluent delivery timing and the instrument calibration after replacing a WBC diluent dispenser.

1. If you did this procedure following replacement of an RBC diluent dispenser, verify calibration.
   a. Do Heading 4.7, INITIAL ADJUSTMENT OF PRIMARY-MODE CALIBRATION FACTORS.
   b. Advise the customer that you have changed the calibration and that they need to verify calibration of the Primary mode as outlined in the Special Procedures and Troubleshooting manual.
2. If you did this procedure following replacement of a WBC diluent dispenser, check the CBC lytic reagent and diluent delivery timing. Go to Heading 4.20, LYTIC REAGENT AND DILUENT DELIVERY TIMING CHECK.

3. Verify instrument performance:
   a. Do a Start Up or System Test.
   b. Check reproducibility as instructed under Heading 4.5, REPRODUCIBILITY CHECKS.
   c. Run controls.

4.20 LYTIC REAGENT AND DILUENT DELIVERY TIMING CHECK

Tools/Supplies Needed

- ❑ Storage scope with probes
- ❑ Coaxial cable with BNC connectors
- ❑ Pressure transducer and test box, PN 2906535, or a digital pressure meter, such as a Marsh Meter, PN 2906639
- ❑ Hemostat

Purpose

Use this procedure to verify the lytic reagent and diluent delivery time:

- At installation.
- If the instrument exhibits any of the following conditions -
  - Increased differential flagging, "false positives"
  - Decreased differential flagging, "false negatives"
  - An abnormal number of "incomplete computations" (....) on differential results.
- Whenever you replace a component that could affect the timing, such as -
  - WBC diluent dispenser
  - Lytic reagent pumps
  - Blood sampling valve.

Procedure

ATTENTION: If you are checking the lyse and diluent delivery timing as part of instrument installation, you do not need to check the volume dispensed by the CBC lytic reagent pumps and the WBC diluent dispenser. Begin at step 3.

1. Verify that the CBC lytic reagent pumps are delivering the correct volume as directed under Heading 4.18, CBC LYTIC REAGENT PUMPS VERIFICATION.
2. Verify that the WBC diluent dispenser is delivering the correct volume as directed under Heading 4.19, RBC/WBC DILUENT DISPENSERS VOLUME TESTING.

CAUTION Connecting or disconnecting trigger cables to the DILUTER INTERFACE card with the power on can damage the card. Turn off the instrument before connecting and disconnecting trigger cables to the DILUTER INTERFACE card.

---

3. Power down the instrument as directed in Power Down/Power Up the System under Heading 4.1, GUIDELINES FOR SERVICING THE HmX ANALYZER.
4. Disconnect the Y-fitting for the CBC lytic reagent and diluent input line to the WBC bath. See Figure 4.20-1.
5. Connect the external trigger probe to LYSE TRIG on the DILUTER INTERFACE card and the trigger probe ground to chassis ground.
6. Connect the transducer and the test equipment as shown in Figure 4.20-2 or Figure 4.20-3, ensuring there are no crimps or pinched tubing.

Figure 4.20-1 WBC Bath Tubing Disconnect for Lytic Reagent/Diluent Delivery Timing Hookup

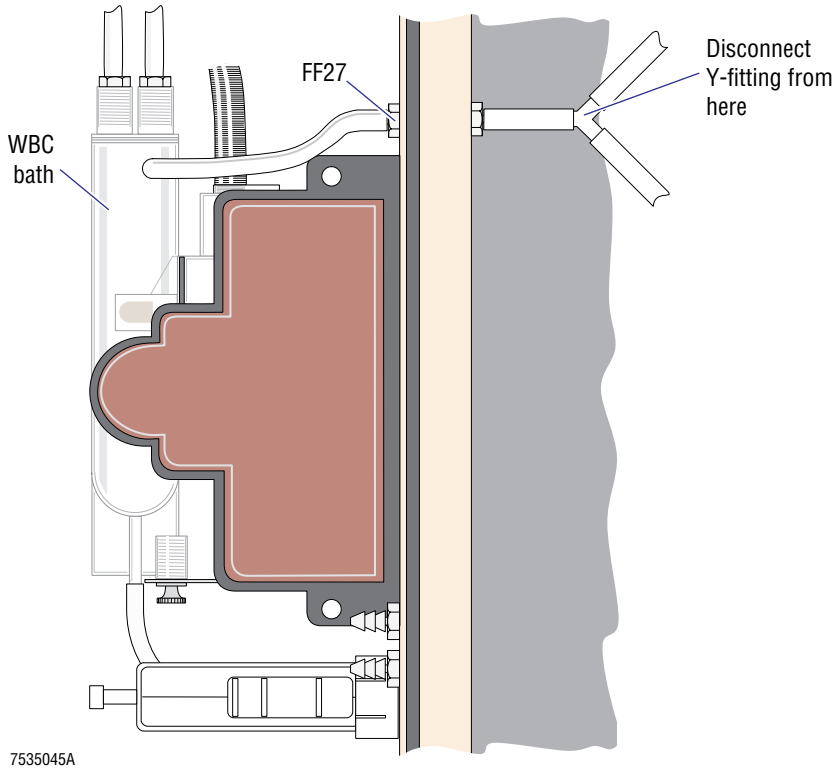

Figure 4.20-2 Test Box and Transducer Hookup for Lytic Reagent/Diluent Timing Procedure

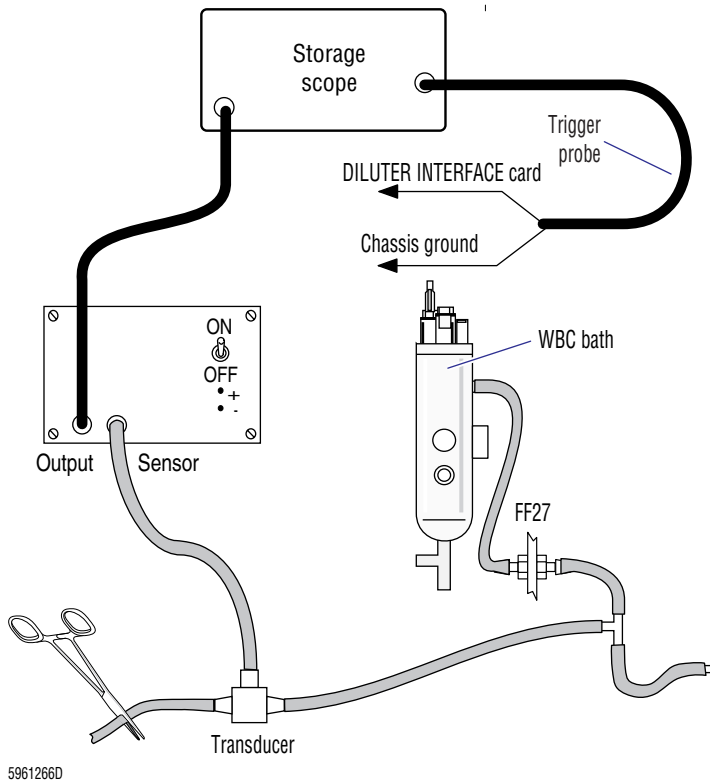

Figure 4.20-3 Digital Pressure Meter Hookup for Lytic Reagent/Diluent Timing Procedure

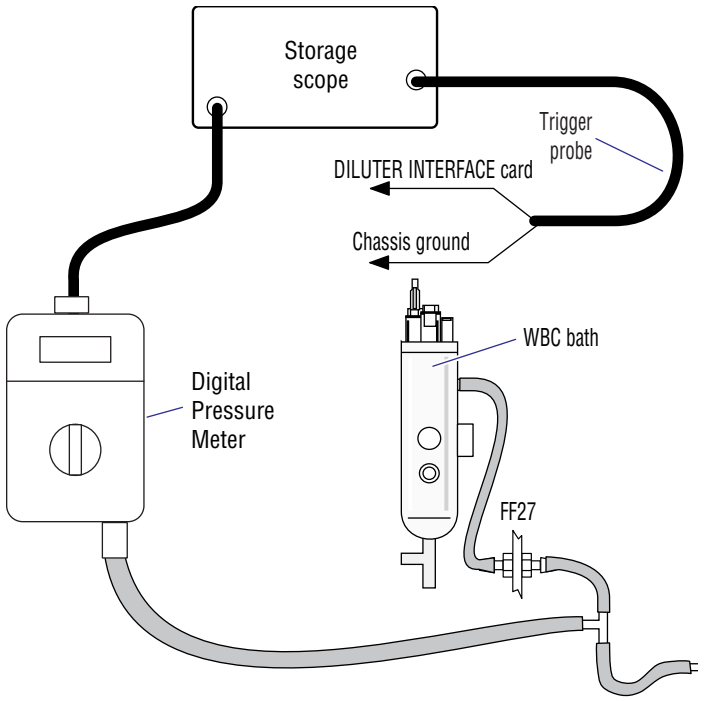

7. Configure scope settings as shown:

Function	Setting
Source	DC
Timebase	0.5 sec/div
Capture	Single and hold
Trigger	Negative external trigger
Channel	Single channel
Voltage	20 mV, 50 mV or 0.1 V/div
AC-DC-GD	DC

8. Power up the instrument.
9. Adjust the 30-psi pressure to 30 psi ±0.1.
10. Prime the transducer to eliminate bubbles in the tubing.
    a. From Sample Analysis menu, press F8 **Rinse** which drains and rinses baths.
    b. Unclamp hemostats when baths are filling to prime sensor.
    c. Place gauze or a vial under tubing to catch diluent.
    d. Clamp hemostats during diluent flow to prevent bubbles.
    e. Repeat steps a through d as necessary until lines are bubble-free.
11. Cycle the instrument in the Secondary mode to prime.

12. Cycle the instrument in the Secondary mode again to display a waveform on the scope.
13. Compare the waveform display to the example in Figure A.1-1 and verify that the timing of the waveform is within the given tolerances.

    Note: T_0 - T_4 should be as close to the nominal value specified in Figure A.1-1 as possible to stay within the specifications if the 30-psi pressure increases or decreases.
14. If the timing is not correct:
    a. Change or adjust the choke according to Table A.1-16, Diluent and Lyse Timing Acceptable Choke Combinations
    b. Repeat from step 12 until the tolerances are met.
15. Power down the instrument as directed in Power Down/Power Up the System under Heading 4.1, GUIDELINES FOR SERVICING THE HmX ANALYZER.
16. Disconnect the trigger cables and transducer hookup.
17. Reconnect the Y-fitting to the CBC lytic reagent and diluent input line for the WBC bath.
18. Power up the instrument and verify it is working correctly. Go to Verification.

Verification

1. If you did this procedure as part of installation, no further verification is needed at this time. Go back to Heading 3.7, ADJUSTMENTS AND CALIBRATION, and begin at step 2 under Verifying the Diluent and Lytic Reagent Dispense Timing.
2. If you did this procedure following replacement of a BSV, a CBC lytic reagent pump, or a WBC diluent dispenser, verify calibration.
    a. Do Heading 4.7, INITIAL ADJUSTMENT OF PRIMARY-MODE CALIBRATION FACTORS.
    b. Advise the customer that you have changed the calibration and that they need to verify calibration of the Primary mode as outlined in the Special Procedures and Troubleshooting manual.
3. If you did this procedure as part of the procedure for converting the instrument to cyanide-free reagents, go back to Pre-Conversion Instrument Verification under Heading 3.10, CONFIGURING THE HmX ANALYZER FOR CYANIDE-FREE REAGENTS, and begin at step 4.
4. Verify instrument performance:
    a. Do a Start Up or System Test.
    b. Check reproducibility as instructed under Heading 4.5, REPRODUCIBILITY CHECKS.
    c. Run controls.

4.21 BLOOD/BUBBLE DETECTORS GAIN ADJUSTMENT

Tools/Supplies Needed

- ❑ DMM voltmeter
- ❑ Trim pot adjustment tool, PN 5415364
- ❑ Blood specimens

Procedure

1. Remove the left-side panel and the Sample Handler card cover to access the Sample Handler card. See Figure 2.1-5 for location of the card.
2. Ensure the instrument is ON.
3. Do a Startup cycle. Verify that no bubbles are left in the sample path from the pierce needle to FF44 on the BSV module.
4. Adjust and record the voltage for the front blood/bubble detector:
   a. Connect the DMM negative lead to TP5 on the Sample Handler card. See Figure 4.21-1.
   b. Connect the DMM positive lead to TP23 on the Sample Handler card. See Figure 4.21-1.
   c. Adjust potentiometer R64 (Figure 4.21-1) until the measured voltage on the DMM equals the voltage labeled on the front detector cable ± the limits specified in Table A.1-22, Blood/Bubble Detectors Tolerances.
   d. Record the voltage for future reference.

Figure 4.21-1 Blood/Bubble Detector Test Points and Adjustments

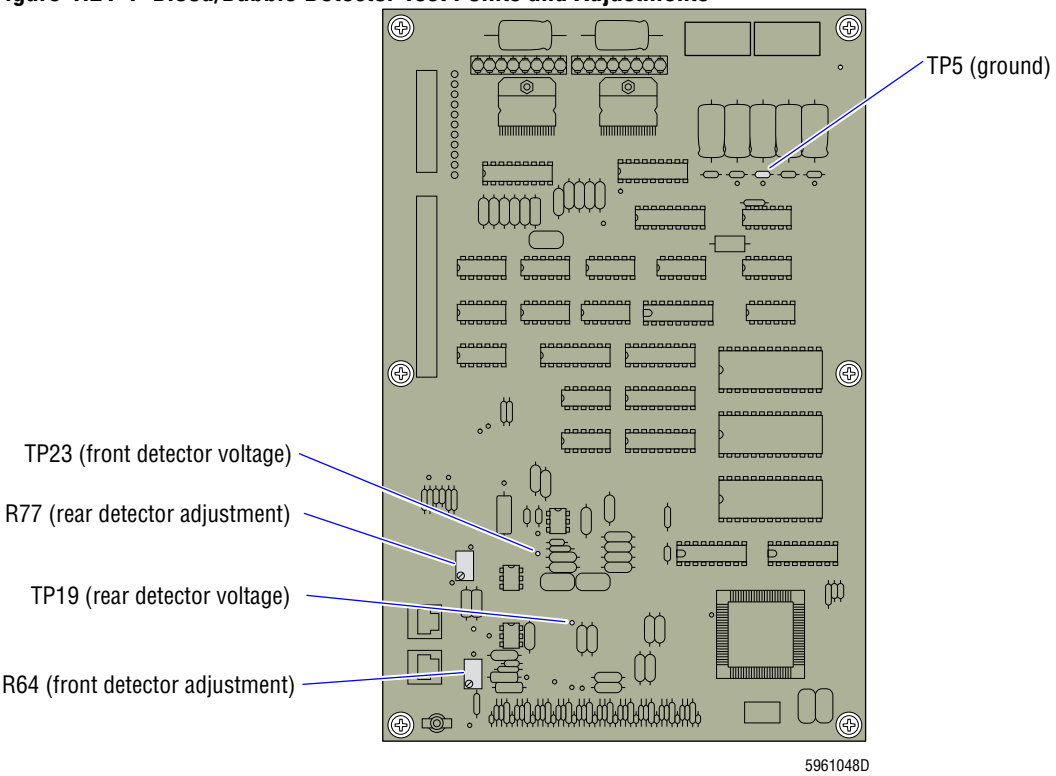

5. Adjust and record the voltage for the rear blood/bubble detector:
   a. Leave the DMM negative lead connected to TP5 on the Sample Handler card. See Figure 4.21-1.
   b. Remove the DMM positive lead from TP23 and connect it to TP19. See Figure 4.21-1.
   c. Adjust potentiometer R77 (Figure 4.21-1) until the measured voltage on the DMM equals the voltage labeled on the rear detector cable ± the limits specified in Table A.1-22, Blood/Bubble Detectors Tolerances.
   d. Record the voltage for future reference.

IMPORTANT The circuitry on the Sample Handler card is set up for matched sets of blood detectors, and may not work correctly with a nonmatched set. Never replace a single blood detector out of a pair. Always replace both blood detectors with a factory matched set.

6. If voltages measured in steps 4 and 5 cannot be adjusted to match level labeled:
   a. Prime the instrument. From the Main menu of the DMS, select **Diluter Functions ▸▸ Prime Reagents All**.
   b. Repeat steps 3 through 5.
   c. If the condition still exists, replace the blood detectors.
7. Verify the instrument is working correctly. Go to Verification.

Verification

1. Select **Run Samples** from the Sample Analysis menu in the Primary-mode.
2. Run a number of blood samples:
   a. Ensure that the blood samples are positioned between the front and rear blood detectors during BSV segmentation and that no aspiration errors occur.
   b. Ensure the backwash appears good.
   c. Measure the voltage at TP19 and TP23 (Figure 4.21-1) and ensure that within 2 minutes after the backwash the voltages return to the same value recorded in steps 4 and 5 ± the limits specified in Table A.1-22, Blood/Bubble Detectors Tolerances.
3. Install the Sample Handler card cover and the left-side panel.
4. If adjusting the blood/bubble detector gains as part of installation, no further verification is needed at this time. Go back to Heading 3.5, INITIAL SYSTEM SETUP, and begin at step 2 under Adjusting the Blood/Bubble Detector Gains.
5. Verify instrument performance:
   a. Do a Start Up or System Test.
   b. Check reproducibility as instructed under Heading 4.5, REPRODUCIBILITY CHECKS.
   c. Run controls.

4.22 ELECTRONIC POWER SUPPLY REPLACEMENT

Removal

WARNING Risk of personal injury. Contacting exposed electronic components while the instrument is attached to power can cause personal injury from electric shock. Power down completely before removing covers to electronic components.

1. Power down the instrument as directed in Power Down/Power Up the System under Heading 4.1, GUIDELINES FOR SERVICING THE HmX ANALYZER.
2. Open the rear Analyzer module doors.
3. Disconnect P105, P115, P116, P112, P108, P107, P113, and P114 from their respective connectors on the rear of the Electronic Power Supply. See Figure 4.22-1.

   Note: P119 is not used.

Figure 4.22-1 Electronic Power Supply Connectors

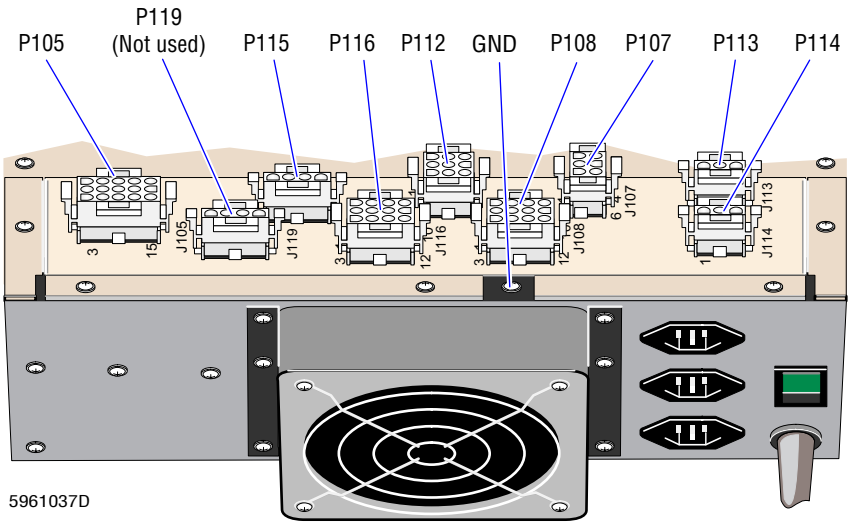

4. Disconnect the ground wires.
5. Open the upper front cover.
6. Remove the Electronic Power Supply mounting bracket.
7. Pull out the Electronic Power Supply from the front of the instrument.

Installation

1. Inspect the new Electronic Power Supply and reconfigure it if necessary:
   a. Remove the Electronic Power Supply cover.
   b. Verify that all Electronic Power Supply Terminal card (TB) jumpers and connections are configured for the correct input line voltage. Refer to Table A.3-3, Electronic Power Supply Terminal Card Jumpers and Connections.
   c. Reinstall the Electronic Power Supply cover.

CAUTION The opening for the Electronic Power Supply contains wiring harness connectors which could be jammed behind the Electronic Power Supply. As you slide in the Electronic Power Supply, access the wiring harness connectors from the rear of the Main Unit and move them as needed to avoid jamming.

2. At the front of the Main Unit, position the Electronic Power Supply on its guide rails, and carefully slide the Electronic Power Supply into the opening.
3. Connect wiring harness plugs P105, P107, P108, P112, P113, P114, P115, and P116 to their respective connectors on the Electronic Power Supply. (P119 is not connected.)
4. Connect the ground wire (green) to the top rear edge of the Electronic Power Supply chassis.

   Note: Push the Electronic Power Supply slightly forward to expose the ground E-Point.
5. Close the rear Analyzer module doors.
6. Install the Electronic Power Supply mounting bracket at the front of the instrument.
7. Close the upper front cover.
8. Power up the instrument.
9. Check the voltages and adjust if necessary as directed under Heading 4.23, VOLTAGE CHECKS AND ADJUSTMENTS.

4.23 VOLTAGE CHECKS AND ADJUSTMENTS

This section includes two voltage check procedures.

- Use the System Voltage Checks to verify, and adjust if necessary, the system voltages:
  - At instrument installation.
  - After replacing the Electronic Power Supply.
  - When troubleshooting system voltage error messages.
- Use the LS Offset Voltage Check to verify the laserLS voltage offset is correct:
  - At instrument installation.
  - When troubleshooting light scatter problems.

System Voltage Checks

Using the DMS to Check System Voltages

1. Select **Special Functions ▸▸ Diagnostics ▸▸ Operator Options ▸▸ System Test**.
2. Press F3 to start the System Test.
3. Ensure the voltages are within the limits specified in Table A.1-23, System Voltage Ranges.
4. If necessary, adjust the voltages as directed below in Using an External DMM to Check and Adjust System Voltages.
5. Verify the instrument is working correctly. Go to System Voltage Checks Verification at the end of this section.

Using an External DMM to Check and Adjust System Voltages

1. Open the upper front door to access the front of the Electronic Power Supply (Figure 4.23-1).
2. Read the voltages at the test points (J120) and ensure that the voltages are within the limits specified in Table A.1-23, System Voltage Ranges.
3. If the voltages are not within limits, verify the Electronic Power Supply is configured correctly, and adjust the +5, +5.6, +12, +24, +6.3, +300, +15, or -15 Vdc as necessary.

WARNING Risk of personal injury. Contacting exposed electronic components while the instrument is attached to power can cause personal injury from electric shock. Power down completely before removing covers to electronic components.

---

   a. Power down the instrument and remove the Electronic Power Supply as directed under Heading 4.22, ELECTRONIC POWER SUPPLY REPLACEMENT.
   b. Remove the cover from the Electronic Power Supply.
   c. Verify that all Electronic Power Supply Terminal card (TB) jumpers and connections are configured for the correct input line voltage. Refer to Table A.3-3, Electronic Power Supply Terminal Card Jumpers and Connections.
   d. Insert a jumper between pins 5 and 6 of J108. See Figure 4.23-2.

Figure 4.23-1 Electronic Power Supply, Front View

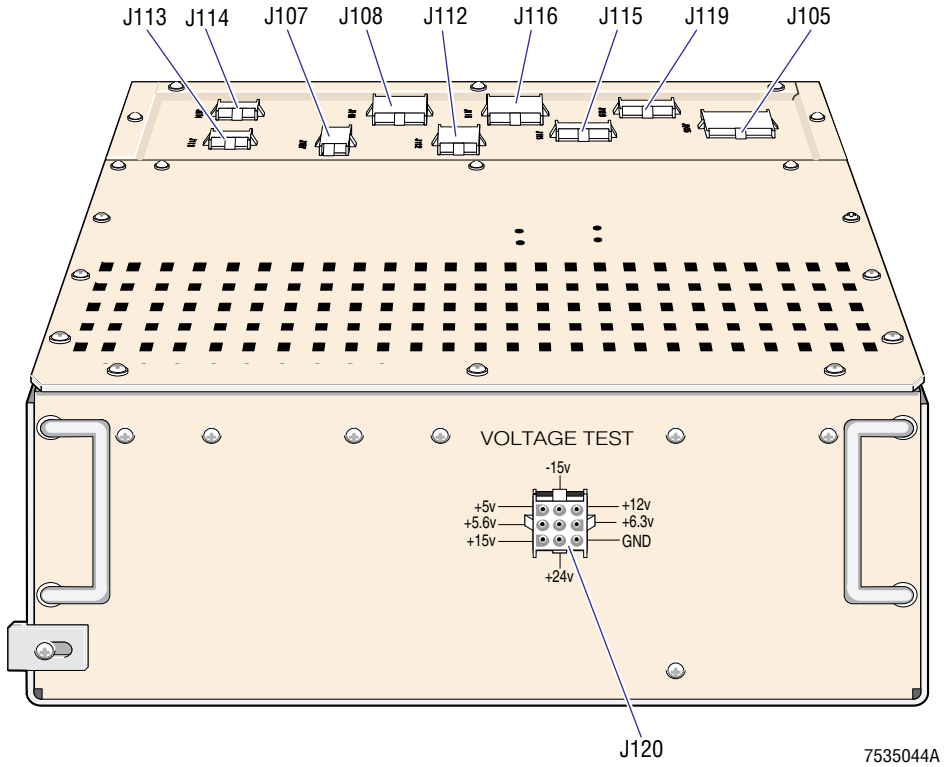

Figure 4.23-2 Electronic Power Supply, Top View with Cover Removed

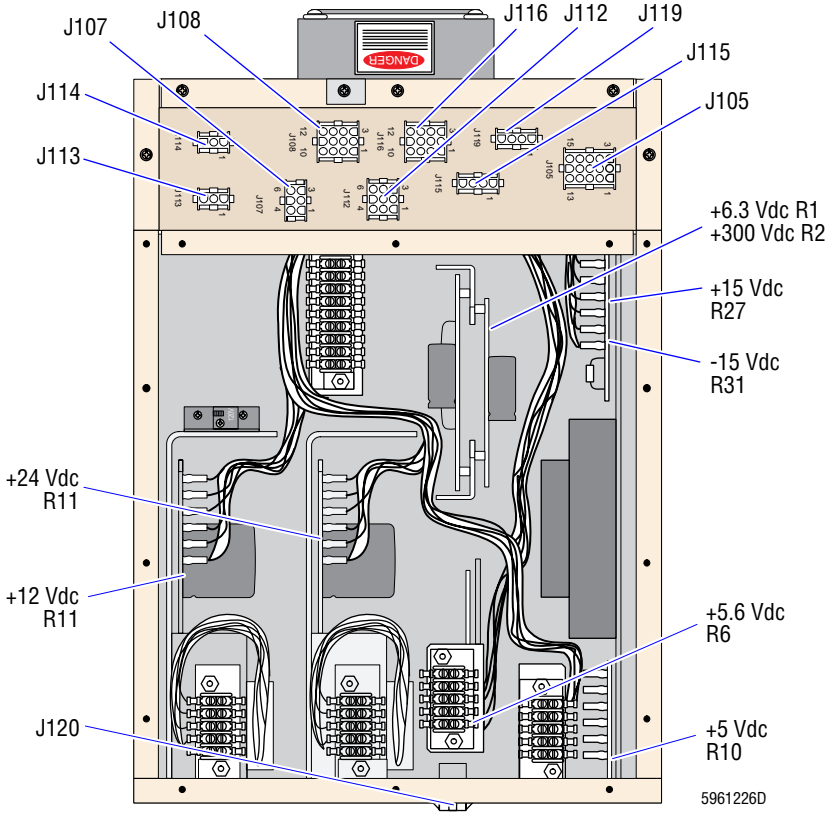

e. Power up the instrument. Refer to Power Up under Heading 4.1, GUIDELINES FOR SERVICING THE HmX ANALYZER.

WARNING Lethal voltages are present in the Electronic Power Supply. Use extreme caution when making voltage adjustments.

f. Connect the DMM to the appropriate test points on the Power Supply modules to be adjusted. Refer to Figure 4.23-2 and to Table A.3-4, Electronic Power Supply Test Points and Adjustments).

Note: +300 Vdc must be turned ON to measure.

CAUTION Misadjusting the Power Supply potentiometers could damage electronic components or cause the instrument to sense the voltages incorrectly. DO NOT adjust any potentiometer that is not listed in Table A.3-4, Electronic Power Supply Test Points and Adjustments. When adjusting a Power Supply voltage, adjust it to the value specified in Table A.3-4, Electronic Power Supply Test Points and Adjustments.

g. While observing the voltages at the test points, adjust the potentiometers as required (Figure 4.23-2 and Table A.3-4, Electronic Power Supply Test Points and Adjustments).

h. Power down the instrument as directed in Power Down/Power Up the System under Heading 4.1, GUIDELINES FOR SERVICING THE HmX ANALYZER.

i. Remove the jumper from J108 (Figure 4.23-2).

j. Install the cover on the Electronic Power Supply.

k. Install the Electronic Power Supply in the Main Unit and power up the instrument. Refer to Installation under Heading 4.22, ELECTRONIC POWER SUPPLY REPLACEMENT.

4. Close the upper front door and verify the instrument is working correctly. Go to System Voltage Checks Verification at the end of this section.

LS Offset Voltage Check

Tools/Supplies Needed

- ❑ Service Disk

Procedure

1. Open the right-side door of the Main Unit to access the LS Preamp module.

WARNING The laser beam can cause eye damage if viewed either directly or indirectly from reflective surfaces (such as a mirror or shiny metal surface). Ensure the laser cover is on and the front doors of the Main Unit are closed while you do the LS Offset Voltage Check.

2. Ensure the laser cover is on and the front doors of the Main Unit are closed.
3. Set up the DMM as follows:
   a. Set the DMM to measure volts.
   b. Connect the DMM to TP1 and TP3 on the LS Preamp 5 module.
4. Activate the service options as directed under Heading 4.2, USING THE SERVICE DISK.

5. Read the LS offset voltage in the Diff Latex-Calibration mode.
   a. From the Service Options menu, select **Latex Checks ▸▸ Diff Latex Calibration**.
   b. Press F3 **Secondary**.

   ATTENTION: Take the LS offset reading before the DMS displays the message, *To stop rerun, press aspiration switch now*, to avoid noise interference.

   c. Cycle diluent and measure the LS offset voltage while the instrument is "counting."
   d. Ensure the voltage reading in the Diff mode is within the limits specified in Table A.1-19, LS Offset Voltage.
   e.
6. Read the LS offset voltage in the Retic Latex-Calibration mode.
   a. From the Service Options menu, select **Latex Checks ▸▸ Retic Latex Calibration**.
   b. Press F3 **Secondary**.
   c. Cycle diluent and measure the LS offset voltage while the instrument is "counting."
   d. Ensure the voltage reading in the Retic mode is within the limits specified in Table A.1-19, LS Offset Voltage.
7. If you measured the LS offset voltage as part of installation, record the results on the Installation Test Data Log Sheets as directed in Measuring the LS Offset Voltage, step 2, under Heading 3.7, ADJUSTMENTS AND CALIBRATION.

System Voltage Checks Verification

Verify instrument performance:

1. Do a Start Up or System Test.
2. Check reproducibility as instructed under Heading 4.5, REPRODUCIBILITY CHECKS.
3. Run controls.

4.24 PNEUMATIC POWER SUPPLY REPLACEMENT

Removal

1. Power down the instrument as directed in Power Down/Power Up the System under Heading 4.1, GUIDELINES FOR SERVICING THE HmX ANALYZER.
2. At the rear of the instrument, remove the eight screws that secure the Pneumatic Power Supply to the instrument. See Figure 4.24-1.

Figure 4.24-1 Pneumatic Supply Removal

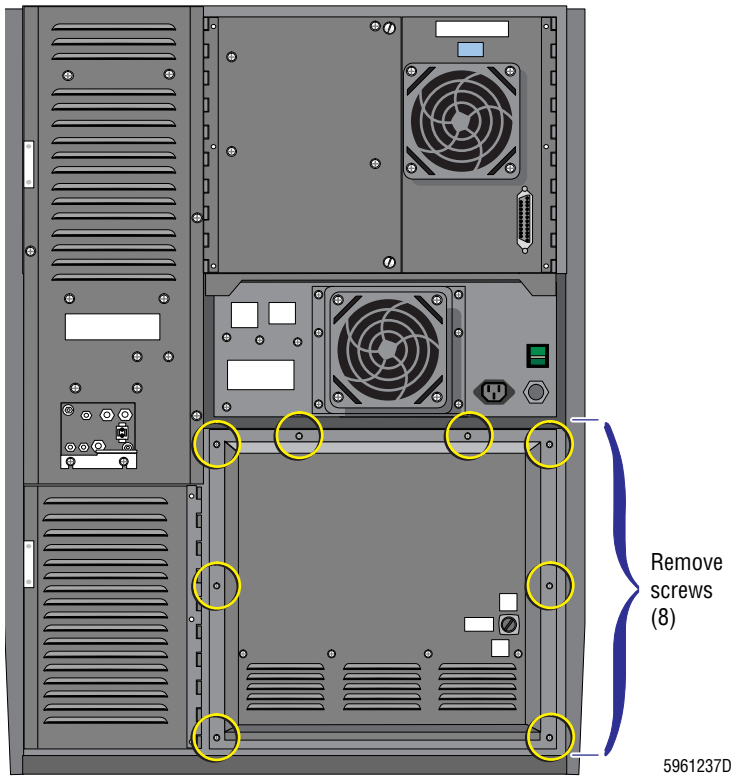

3. Pull the Pneumatic Power Supply partially out from the rear of the instrument.
4. Disconnect the pressure and vacuum tubing from the instrument.
5. Disconnect J90 from the left front of the Pneumatic Power Supply (left/right orientation from the front of the instrument).
6. Disconnect the ground wire for the Pneumatic Power Supply from the chassis.
7. Remove the Pneumatic Power Supply.

Setup of Pneumatic Power Supply Buck-Boost Transformer

1. Measure and record the ac line voltage at the socket designated for the instrument.
2. Configure the Pneumatic Power Supply Buck-Boost Transformer Terminal card to the appropriate configuration for the line voltage measured. Refer to Table A.3-6, Pneumatic Power Supply Buck-Boost Transformer Terminal Card Jumpers and Connections.

Installation

1. Slide the Pneumatic Power Supply partially into the instrument.
2. Connect the ground wire to the chassis.
3. Connect J90 to the Pneumatic Power Supply. Refer to Figure 4.24-1
4. Connect the pressure and vacuum lines to the instrument.
5. Slide the Pneumatic Power Supply fully into the instrument.
6. Install the eight screws that secure the Pneumatic Power Supply to the instrument.
7. Power up the instrument.
8. Verify the pressure and vacuum settings are correct as directed under Heading 4.25, PRESSURE/VACUUM ADJUSTMENT.

4.25 PRESSURE/VACUUM ADJUSTMENT

General

You can use a DMS or an external DMM to monitor and adjust pressure and vacuum settings.

- If you are using the DMS, use the pressure and vacuum readings on the DMS screen in the following procedures.
- If you are using a DMM, use the voltage readings on the DMM in these procedures.
- Refer to Table A.2-6 to convert the pneumatic readings to Vdc readings and vice versa.

System Test (Pressure/Vacuum Verification)

1. Select **Special Functions ▸▸ Diagnostics ▸▸ Operator Options ▸▸ System Test**.
2. Press F3 to start the System Test.
3. Ensure the vacuum and pressure readings are within the limits specified in Table A.1-13, Pressure and Vacuum Tolerances.
4. If the readings are not within limits, make the necessary adjustments as directed under:
   - 60-psi Pressure Adjustment
   - 30-psi Pressure Adjustment
   - Sheath Pressure Adjustment
   - Initial Sample Pressure Adjustment
   - High Vacuum Verification
   - Low Vacuum Adjustment

Pressure Adjustments

Tools/Supplies Needed

- ❑ A digital pressure meter, such as a Marsh Meter, PN 2906639 (For 60-psi pressure adjustment)

60-psi Pressure Adjustment

1. Remove the left-side panel of the Main Unit and remove the Pneumatic Power Supply's side access panel to access the 60-psi regulator (pressure relief valve). See Figure 4.25-1.

IMPORTANT The voltage potentiometers on the Pneumatic Monitor card are preset and if misadjusted might cause the instrument to sense the pneumatic signals incorrectly. Do NOT adjust the voltage potentiometers on the Pneumatic Monitor card.

---

2. If you are using a DMM:
   a. Remove the cover from the Pneumatic Monitor card. For the location of the Pneumatic Monitor card, refer to Figure 2.1-3.
   b. Connect the DMM to TP200 and TP2 (ground). Refer to Figure A.2-7.
3. Unlock the 60-psi regulator by pulling up the adjustment knob. See Figure 4.25-1.

Figure 4.25-1 60-psii Pressure Regulator

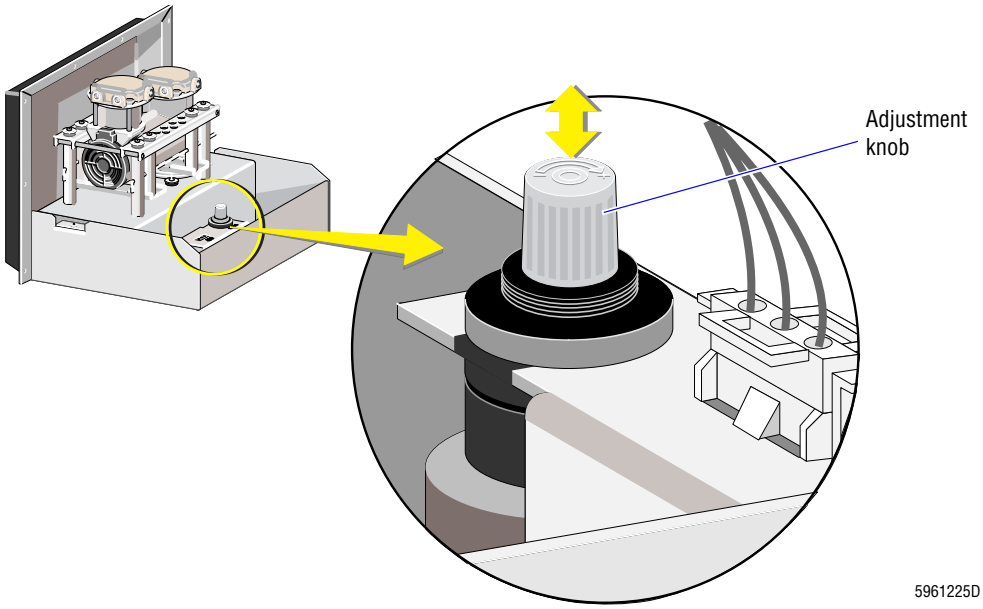

4. Perform the System Test (**Special Functions ▸▸ Diagnostics ▸▸ Operator Options ▸▸ System Test**).
5. Turn the adjustment knob until the DMS reads 60 psi or the DMM reads 8.57 Vdc.
6. After adjustment, push down the adjustment knob to lock the knob in position, preventing it from turning.
7. Verify the compressor is supplying adequate pressure at peak load:
   a. Disconnect the 60 psi line from the Pneumatic Monitor card and attach the line to a Y- or T-fitting.
   b. Attach 5 cm (2 in.) pieces of tubing to the remaining two legs of the Y- or T-fitting.
   c. Connect one leg of the Y- or T-fitting to the Pneumatic Monitor card and the other leg to the digital pressure meter.
   d. Do a normal whole blood cycle and ensure that throughout the cycle the 60-psi pressure never drops below the minimum acceptable peak load pressure specified in Table A.1-13, Pressure and Vacuum Tolerances.
   e. Disconnect the Y- or T-fitting and reconnect the 60-psi line to the Pneumatic Monitor card.
8. Reinstall the side access panel on the Pneumatic Power Supply and the left-side panel on the Main Unit.
9. If you are using a DMM, disconnect the DMM and install the cover on the Pneumatic Monitor card.
10. Verify instrument performance:
    a. Do a Start Up or System Test.
    b. Check reproducibility as instructed under Heading 4.5, REPRODUCIBILITY CHECKS.
    c. Run controls.

30-psi Pressure Adjustment

IMPORTANT The voltage potentiometers on the Pneumatic Monitor card are preset and if misadjusted might cause the instrument to sense the pneumatic signals incorrectly. Do NOT adjust the voltage potentiometers on the Pneumatic Monitor card.

1. Open the right-side door of the Main Unit to access the 30 psi regulator (pressure relief valve), RG2. For the location of RG2, refer to Figure A.5-6.
2. If you are using a DMM:
   a. Remove the cover from the Pneumatic Monitor card. For the location of the Pneumatic Monitor card, refer to Figure 2.1-3.
   b. Connect the DMM to TP100 (pin 7) and to TP2 (ground). Refer to Figure A.2-7.
3. Perform the System Test (**Special Functions ▸▸ Diagnostics ▸▸ Operator Options ▸▸ System Test**).
4. Turn the 30-psi regulator adjustment knob until the DMS reads 30 psi or the DMM reads 8.57 Vdc.
5. Do a normal whole blood cycle and observe the RBC and WBC diluent dispensers. Ensure each diluent dispenser reaches top-of-stroke, pushing the entire sample through to the bath, before the center section of the BSV rotates back to the home position.
6. Close the right-side door.
7. If you are using a DMM, disconnect the DMM and install the cover on the Pneumatic Monitor card.
8. Verify instrument performance:
   a. Do a Start Up or System Test.
   b. Check reproducibility as instructed under Heading 4.5, REPRODUCIBILITY CHECKS.
   c. Run controls.

Sheath Pressure Adjustment

1. Open the right-side door of the Main Unit to access the sheath pressure regulator, RG3. For the location of RG3, refer to Figure A.5-6.
2. If you are using a DMM:
   a. Remove the cover from Pneumatic Monitor card. For the location of the Pneumatic Monitor card, refer to Figure 2.1-3.
   b. Connect a DMM to TP400 (pin 2) and to TP2 (ground). Refer to Figure A.2-7.
3. Perform the System Test (**Special Functions ▸▸ Diagnostics ▸▸ Operator Options ▸▸ System Test**).

ATTENTION: The sheath-pressure regulator is a non-relieving regulator. To adjust pressure down, turn the knob well below the desired pressure setting and bleed the line on the regulated side. After bleeding the line, adjust the pressure up to the desired value.

4. Turn the sheath pressure regulator adjustment knob until the DMS reads 6.0 psi or the DMM reads 4.286 Vdc.
5. Close the right-side door.

6. If you are using a DMM, disconnect the DMM and install the cover on the Pneumatic Monitor card.
7. Verify instrument performance:
   a. Do a Start Up or System Test.
   b. Check reproducibility as instructed under Heading 4.5, REPRODUCIBILITY CHECKS.
   c. Run controls.

Initial Sample Pressure Adjustment

1. Open the right-side door of the Main Unit to access the sample pressure regulator, RG4. For the location of RG4, refer to Figure A.5-6.
2. If you are using a DMM:
   a. Remove the cover from Pneumatic Monitor card. For the location of the Pneumatic Monitor card, refer to Figure 2.1-3.
   b. Connect a DMM to TP600 (pin 6) and to TP2 (ground). Refer to Figure A.2-7.
3. Perform the System Test (**Special Functions ▸▸ Diagnostics ▸▸ Operator Options ▸▸ System Test**).

ATTENTION: The sample-pressure regulator is a non-relieving regulator. To adjust pressure down, turn the knob well below the desired pressure setting and bleed the line on the regulated side. After bleeding the line, adjust the pressure up to the desired value.

4. Turn the sample pressure regulator adjustment knob until the DMS reads 0.8 psi or the DMM reads 5.33 Vdc.
5. Close the right-side door.
6. If you are using a DMM, disconnect the DMM and install the cover on the Pneumatic Monitor card.
7. Verify instrument performance:
   a. Do a Start Up or System Test.
   b. Check reproducibility as instructed under Heading 4.5, REPRODUCIBILITY CHECKS.
   c. Run controls.
8. Refer to Heading 4.10, VCS FLOW-RATE ADJUSTMENT for final sample pressure adjustment.

Vacuum Adjustments

High Vacuum Verification

Note: The high vacuum system cannot be adjusted. This test is to verify that the Hi Vac reading is at the proper value. High vacuum varies depending on the altitude at which the instrument is located.

1. If you are using a DMM:
   a. Remove the cover from Pneumatic Monitor card. For the location of the Pneumatic Monitor card, refer to Figure 2.1-3.

b. Connect a DMM to TP300 (pin 1) and to TP2 (ground). Refer to Figure A.2-7.

2. Perform the System Test (**Special Functions ▸▸ Diagnostics ▸▸ Operator Options ▸▸ System Test**).
3. Verify the high vacuum reading on the DMS is within the limits specified in Table A.1-13, Pressure and Vacuum Tolerances, or the reading on the DMM is within the equivalent voltages specified on Table A.2-6.
4. If you are using a DMM, disconnect the DMM and install the cover on the Pneumatic Monitor card.
5. Verify instrument performance:
   a. Do a Start Up or System Test.
   b. Check reproducibility as instructed under Heading 4.5, REPRODUCIBILITY CHECKS.
   c. Run controls.

Low Vacuum Adjustment

1. Open the right-side door of the Main Unit to access the low vacuum regulator, RG1. For the location of RG1, refer to Figure A.5-6.
2. If you are using a DMM:
   a. Remove the cover from Pneumatic Monitor card. For the location of the Pneumatic Monitor card, refer to Figure 2.1-3.
   b. Connect a DMM to TP500 (pin 3) and to TP2 (ground). Refer to Figure A.2-7.
3. Perform the System Test (**Special Functions ▸▸ Diagnostics ▸▸ Operator Options ▸▸ System Test**).
4. Turn the low vacuum regulator adjustment knob until the DMS reads 6.0 in. Hg. or the DMM reads 5.0 Vdc.
5. Close the right-side door.
6. If you are using a DMM, disconnect the DMM and install the cover on the Pneumatic Monitor card.
7. Verify instrument performance:
   a. Do a Start Up or System Test.
   b. Check reproducibility as instructed under Heading 4.5, REPRODUCIBILITY CHECKS.
   c. Run controls.

4.26 SOLENOID VALVES INSPECTION AND REPLACEMENT

Tools/Supplies Needed

- ❑ Service Disk

Solenoid Inspection

1. Activate the service options as directed under Heading 4.2, USING THE SERVICE DISK.
2. From the Service Options menu, select **Solenoid Test**.

CAUTION Manually energizing LV70 without disconnecting the waste line to the waste container will pressurize the container. Disconnect the waste line from the waste container before energizing LV70.

3. Use the arrow keys to select the desired solenoid.
4. Press Enter to highlight the chosen solenoid.
5. Press F2 to energize the solenoid. Check the instrument for the actions listed in Table 4.26-1, Solenoid Operations.

   Note: The solenoid is energized for 10 minutes.
6. If components associated with the solenoid do not function, troubleshoot the system.

Table 4.26-1 Solenoid Operations

LV	Location Reference	Components Activated	Normal State	Operated State
1	Figure A.5-4	PV4	Provides a path for low vacuum to VC1, VC10, and VC11.	Closes low vacuum path. Opens 30 psi pressure path to VC1, VC10, and VC11.
2	Figure A.5-4	PV2, PV66, PV67, PV68, PV69	Closes path from RBC aperture to VC1.	Opens path from RBC aperture to VC10; applies low vacuum to VC10 and vent to VC2 for sweep flow; and closes path from VC10, VC11 to VC1.
3	Figure A.5-4	PV5, PV6	VL5 closes drain from RBC bath to VC1.	VL5 opens drain from RBC bath to VC1.
			VL6 closes drain from WBC bath to VC1.	VL6 opens drain from WBC bath to VC1.
4	Figure A.5-4	PV1, PV7	VL1 provides path to fill CBC lytic reagent pumps (PM1 and PM2).	VL1 closes fill path for PM1 and PM2 and opens CBC lytic reagent path to WBC and BSV.
			VL7 provides path for vacuum to PM1 and PM2.	VL7 closes vacuum path to PM1 and PM2 and opens pressure path to dispense CBC lytic reagent from pumps.
5	Figure A.5-4	PV3	Closes path from WBC aperture to VC1.	Opens path from WBC aperture to VC1.
6	Figure A.5-4	PV8	Provides paths from RBC and WBC baths to overflow cuvette.	Applies vacuum to RBC and WBC baths. Opens path for bleach to RBC and WBC baths.
7	Figure A.5-4	None		Provides low pressure mixing bubble air to WBC bath.

Table 4.26-1 Solenoid Operations *(Continued)*

LV	Location Reference	Components Activated	Normal State	Operated State
8	Figure A.5-4	None		Provides low pressure mixing bubble air to RBC bath.
9		None	LV9 is not the number of a solenoid; it is the number of the software signal used to control the cycle counter.	
10	Figure A.5-6	PV62		Provides vacuum from VC7 to FD7, cleaning agent optical sensor.
11	Figure A.5-6	PV63		Provides vacuum from VC7 to FD6, diluent optical sensor.
12	Figure A.5-6	PV64		Provides vacuum from VC7 to FD5, CBC lytic reagent optical sensor.
13	Figure A.5-6	PV61, PV65		Provides vacuum from VC7 to FD3 and 4, PAK LYSE and PAK PRESERVE optical sensor.
14	Figure A.5-2	PV12, PV13	VL12 provides path for vacuum to air pump PM3.	VL12 provides a path for 30-psi pressure to PM3.
			VL13 provides vent path to fill PM3.	VL13 provides a path for air pressure from PM3 to BSV.
15	Figure A.5-2	PV14	Opens path from BSV to Primary-mode aspiration pump.	Closes path from BSV to Primary-mode aspiration pump.
16	Figure A.5-1			Applies air pressure to BSV actuator to rotate aspirator tip to aspirate position.
17	Figure A.5-1			Applies air pressure to BSV actuator to return aspirator tip to home position.
18	Figure A.5-1			Applies air pressure to BSV actuator to return center section of BSV to aspirate position.
19	Figure A.5-1			Applies air pressure to BSV actuator to rotate center section of BSV to segment position.
20	Figure A.5-2	PV42	Vents probe clean cylinder, CL3.	Routes 30-psi pressure to CL3 to extend the probe rinse block, and activates VL42 which opens the path for pressurized diluent or cleaning agent to the aspirator tip.
21	Figure A.5-2	PV10		Opens path for backwash diluent to waste.
22	Figure A.5-2	PV11		Opens path for bleach through sample valve module.
23	Figure 2.8-1	None	Retracts tube clamping cylinder, CL4. **Note:** Applicable to HmX analyzer with Rotary Cap-Pierce module only.	Extends CL4. **Note:** Applicable to HmX analyzer with Rotary Cap-Pierce module only.

Table 4.26-1 Solenoid Operations *(Continued)*

LV	Location Reference	Components Activated	Normal State	Operated State
24	Figure 2.8-1	None	Retracts tube pierce cylinder, CL5. **Note:** Applicable to HmX analyzer with Rotary Cap-Pierce module only.	Extends CL5. **Note:** Applicable to HmX analyzer with Rotary Cap-Pierce module only.
25	Figure A.5-9	PV23, PV24	VL23 opens aspiration path from Primary-mode aspiration pump, PM4, to vent chamber, VC4.	VL23 opens aspiration path from PM4 to needle.
			VL24 opens vacuum path to PM4.	VL24 opens path for 30 psi pressure to PM4.
26	Figure A.5-9	PV25, PV26	VL25 opens path from Secondary-mode aspiration pump, PM5, to vent chamber, VC4.	VL25 opens aspiration path from VL25 to aspirator tip.
			VL26 opens vacuum path to PM5.	VL26 opens path for 30-psi pressure to PM5.
27	Figure A.5-9	PV27	VL27 opens Erythrolyse II reagent path to Erythrolyse II reagent pumps, PM6 and PM7.	VL27 opens Erythrolyse II reagent path from PM6 and PM7 to sheath tank and mixing chamber.
28	Figure A.5-9	PV22	Provides rinse path from needle to VC4.	VL22 opens path from pressurized diluent for needle rinse.
29	Figure A.5-9	PV21	Opens path from needle bellows to waste, VC3.	Opens drain path from VC3 to VC7.
30	Figure A.5-9	PV20	Opens vent path to VC4.	Opens path from pierce needle to low vacuum, VC3, and from VC4 drain to VC3.
31	Figure A.5-8	PV59	Opens path for sample pressure to diff mix chamber, MC1.	Opens path from MC1 to diff waste, VC7.
32	Figure A.5-8	PV52		Opens path from sheath tank, ST1, to MC1.
33	Figure A.5-8	PV57		Opens drain path from MC1 to diff waste chamber, VC7.
34	Figure A.5-8	PV51		Opens path from BSV to MC1.
35	Figure A.5-6	PV30	Opens vent path to WBC and RBC diluent pumps, PM9 and PM11. Opens path for diluent to PM9 and PM11.	Opens path for 30 psi pressure to PM9 and PM11. Opens diluent path from PM9 and PM11 to BSV.
36	Figure A.5-6	PV31	Provides open path for low vac to low vac chamber, VC6. Provides open low vac path from VC6 to CBC module VC1.	Maintains vacuum path to VC6. Opens drain path from VC6 to CBC module VC1.
37	Figure A.5-6	PV32	Provides vent path for bleach vacuum chamber, VC5.	Closes VC5 vent path. Opens vacuum path from VC5 to manual bleach probe. Opens vacuum path from MF9 to VC5. Opens path for pressurized diluent from MF11, via VL46, to BSV.

Table 4.26-1 Solenoid Operations *(Continued)*

LV	Location Reference	Components Activated	Normal State	Operated State
38	Figure A.5-6	PV33		Opens bleach path from VC5 to mix chamber module.
39	Figure A.5-6	PV34		Opens path from cleaning agent supply to VC5.
40	Figure A.5-6	PV35		Opens waste path from probe rinse block to VC7 via VL49.
41	Figure A.5-6	PV36		Opens waste path from BSV to VC7.
42	Figure A.5-6	PV37	Provides open vacuum path to PM10. Provides open cleaning agent path to PM10. Provides open pressurized diluent path from sheath tank to MF11.	Opens 30 psi pressure path to PM10. Opens cleaning agent path to pressurized diluent manifold, MF11.
43	Figure A.5-6	PV38		VL38 opens path from bleach probe to BSV module.
43	Figure A.5-6	None	Closes path between water trap and waste.	Purge solenoid. Opens path to dispense the water built up in the water trap to waste. Software signal LV70 is used to control this solenoid.
44	Figure A.5-6	PV28	Opens vacuum path to PM6 and PM7	Closes vacuum path and opens pressure path to PM6 and PM7.
45	Figure A.5-6	PV40	Provides open drain path from VC7 to waste.	Opens vacuum path from vacuum manifold, MF13, to VC7 via FMT1.
46	Figure A.5-6	PV49	Provides open path for vacuum and diluent to PM8. Provides open vacuum path from probe wiper to VC7 via VL35.	Opens path for 30-psi pressure to PM8. Opens diluent path for needle backwash.
47	Figure A.5-6	PV43		Opens drain path from low vacuum and waste chamber, VC1.
48	Figure A.5-6	PV48	Provides open path from diluent supply to PM11 via VL30.	Opens backwash path from cleaning agent supply to PM11 via VL30.
49	Figure A.5-6	PV41	Provides open vent path for diff mixing chamber, MC1, via VL59.	Opens path from sample pressure regulator, RG4, to MC1 via VL59.
50	Figure A.5-6	PV44		Opens path for pressurized diluent to flush upper half of flow cell
51	Figure A.5-6	PV45		Opens path for pressurized diluent (sheath fluid) to flow cell.
52	Figure A.5-6	PV46	Opens path for pressurized diluent to the BSV.	Opens drain path from flow cell to VC7. Opens vent path for FMT2.
53	Figure A.5-2	PV15	Opens path from BSV to Primary-mode aspiration pump.	Closes path from BSV to Primary-mode aspiration pump.
54	Figure A.5-8	PV54		Opens path for pressurized diluent to flush lower half of flow cell.
55	Figure A.5-8	PV60		Opens drain path from flow cell to VC7.

Table 4.26-1 Solenoid Operations *(Continued)*

LV	Location Reference	Components Activated	Normal State	Operated State
56	Figure A.5-8	PV50	VL50 provides open StabiLyse reagent path to StabiLyse reagent pump, PM12.	Opens StabiLyse reagent path from PM12 to diff mixing chamber, MC1, via VL53.
57	Figure A.5-8	PV55		Closes path from diff mixing chamber, MC1, to flow cell.
58	Figure A.5-8	PV56		Opens drain path from flow cell to VC7.
59	Figure A.5-8	PV53, PV58		VL53 opens path from PM12 to MC1.
			VL58 provides open path from vacuum manifold, MF13, to StabiLyse reagent pump, PM12.	VL58 opens path from 30-psi pressure manifold, MF15, to PM12.
60 - 64		Spare		
65		None		LV65 is not the number of a solenoid; it is the number of the software signal used to turn mix motor on.
66		None		LV66 is not the number of a solenoid; it is the number of the software signal used to turn RF on (300 Vdc).
67	Figure A.5-6	PV47	Provides open path from sheath tank to pressurized diluent manifold, MF11. Provides open low pressure path from sheath regulator, RG3, to sheath tank.	Opens path from diluent manifold, MF12, to sheath tank. Opens drain path from sheath tank to VC7.
68	Figure A.5-6			Bleeds the compressor.
69*		None		*LV69 is not the number of a solenoid; it is the number of one of the software signals used to turn the compressor on.
70		None		LV70 is not the number of a solenoid; it is the number of the software signal used to energize the water trap solenoid, LV43.
71*		None		*LV71 is not the number of a solenoid; it is the number of one of the software signals used to turn the compressor on.
81	Figure 2.9-3	CL9	Not activated.	Extends CL9 to push the specimen tube back into the cassette.

Table 4.26-1 Solenoid Operations *(Continued)*

LV	Location Reference	Components Activated	Normal State	Operated State
82	Figure 2.9-3	CL7 (with LV83), CL6	Retracts the tube ram cylinder, CL7, in conjunction with LV83, and retracts the needle drive cylinder, CL6. **Note:** LV82 vents port 1 of CL7 and CL6 and applies pressure to port 2 of CL7 and CL6 to retract both cylinders. LV83 vents port 1 of CL7 to allow retraction of CL7.	Extends CL6 to pierce the specimen tube, and works in conjunction with LV83 to extend CL7 to push the specimen tube out of the cassette. **Note**: LV82 vents port 2 of CL6 and applies pressure to port 1 of CL6 to extend CL6 and vents port 2 of CL7 to allow extension of CL7. LV83 applies pressure to port 1 of CL7 to extend CL7.
83	Figure 2.9-3	CL7 (with LV82)	Retracts the tube ram cylinder, CL7, in conjunction with LV82. For details, see LV82 above.	Extends CL7 in conjunction with LV82 to push the specimen tube out of the cassette. For details, see LV82 above.
84	Figure 2.9-3	CL8	Retracts the bed-lock cylinder, CL8, allowing the rocker bed to rock.	Extends CL8 to lock the rocker bed in position.

* Solenoid software signals 69 and 71 must be activated simultaneously to turn the compressor on.

Solenoid Replacement

Removal

CAUTION Risk of damage to electronic components. Connecting or disconnecting a circuit card, solenoid, or any other electronic component while the power is ON can damage the component or the circuitry for the component. Turn OFF the instrument before disconnecting or connecting an electronic component.

1. Power down the instrument as directed in Power Down/Power Up the System under Heading 4.1, GUIDELINES FOR SERVICING THE HmX ANALYZER.

CAUTION The solenoid wires are fragile and break easily. Handle the solenoid wires carefully when disconnecting the wires from the solenoid.

2. Disconnect the solenoid wires from the solenoid.
3. Remove the two screws that secure the solenoid to its manifold.
4. Remove the tubing from the solenoid.
5. Remove the defective solenoid from the manifold.

Installation

1. Connect the wires and tubing to the new solenoid.
2. Install the solenoid on its manifold with two mounting screws.
3. Power up the instrument and go to Verification.

Verification

1. Verify correct solenoid operation as directed under the previous heading, Solenoid Inspection, steps 1 through 5.
2. Verify instrument performance:
   a. Do a Start Up or System Test.
   b. Check reproducibility as instructed under Heading 4.5, REPRODUCIBILITY CHECKS.
   c. Run controls.

4.27 HEMOGLOBIN PREAMP MODULE REPLACEMENT

Purpose

Use this procedure to replace the Hgb Preamp module as a complete assembly.

Removal

CAUTION Risk of damage to electronic components. Connecting or disconnecting a circuit card, solenoid, or any other electronic component while the power is ON can damage the component or the circuitry for the component. Turn OFF the instrument before disconnecting or connecting an electronic component.

1. Power down the instrument as directed in Power Down/Power Up the System under Heading 4.1, GUIDELINES FOR SERVICING THE HmX ANALYZER.
2. Open the upper front door and the right-side panel of the Main Unit.
3. In the right-side of the Main Unit, disconnect the Hgb Preamp module cable, P26, from J26.
4. Remove the nuts and associated washers from the rear of the two mounting screws that secure the Hgb Preamp module to the panel. See Figure 4.27-1 for the location of the Hgb Preamp module mounting screws.

Figure 4.27-1 Hgb Preamp Module

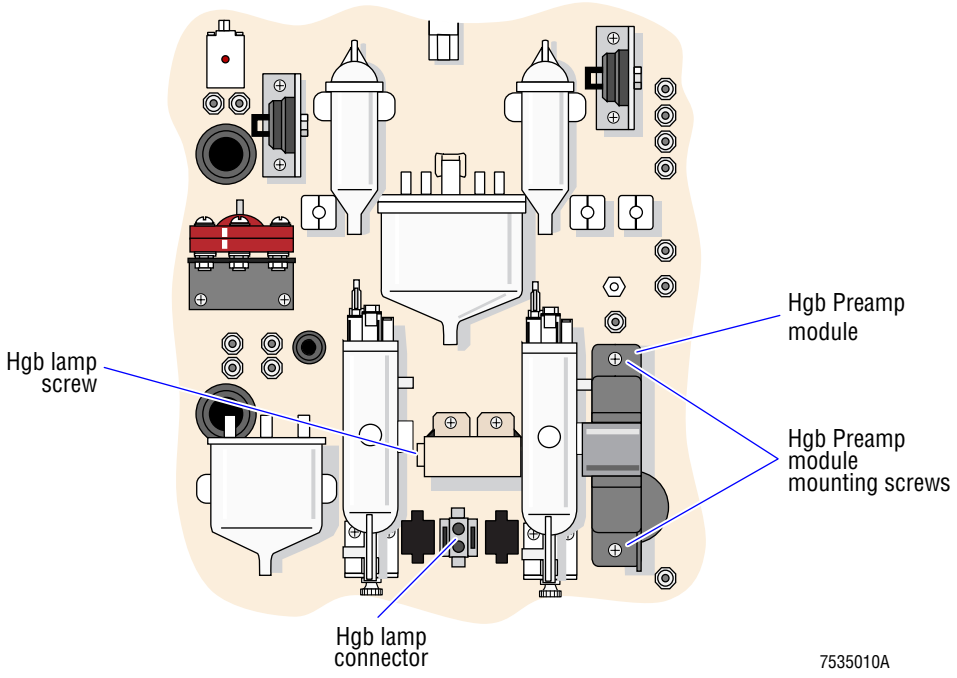

5. While supporting the Hgb Preamp module, remove the mounting screws.
6. Remove the Hgb Preamp module, and pull cable P26 through the mounting hole.

Installation

1. Feed the cable on the new Hgb Preamp module from the front of the panel, through the mounting hole, to the rear of the panel.
2. Position the new Hgb Preamp module on the front of the panel, and reinstall the mounting screws and associated washers and nuts.
3. Connect P26 to J26.
4. Close the front and side panel doors.
5. Power up the instrument.
6. Allow the instrument to warm up for 30 minutes. Then adjust Hgb-blank as instructed below under Hemoglobin Lamp Adjustment

Hemoglobin Lamp Adjustment

1. From the Main menu, select **Special Functions ▸▸ Diagnostics ▸▸ Operator Options ▸▸ HGB Lamp Adjust**.
2. If *Hgb Lamp Adjustment: OK* is displayed, go to Verification. Otherwise, press Esc Enter to repeat the Hgb adjustment.

   Note: It may require up to three attempts to adjust the Hgb lamp.

Verification

Verify instrument performance:

1. Do a Start Up or System Test.
2. Check reproducibility as instructed under Heading 4.5, REPRODUCIBILITY CHECKS.
3. Run controls.

4.28 APERTURE MODULE AND BATH ASSEMBLY

Removal

1. Drain the aperture baths.
2. Power down the instrument as directed in Power Down/Power Up the System under Heading 4.1, GUIDELINES FOR SERVICING THE HmX ANALYZER.
3. Open the upper front door of the Main Unit.
4. Remove the two screws securing the electromagnetic shield to the CBC module and lift off the shield.
5. Disconnect the external electrode.
6. If removing the WBC bath, remove the Hgb Preamp module. Refer to Heading 4.27, HEMOGLOBIN PREAMP MODULE REPLACEMENT.
7. Disconnect the bath from the bath holder by removing the retaining screw on the bottom of the bath (Figure 4.28-1).

Figure 4.28-1 Aperture Module and Bath Assembly

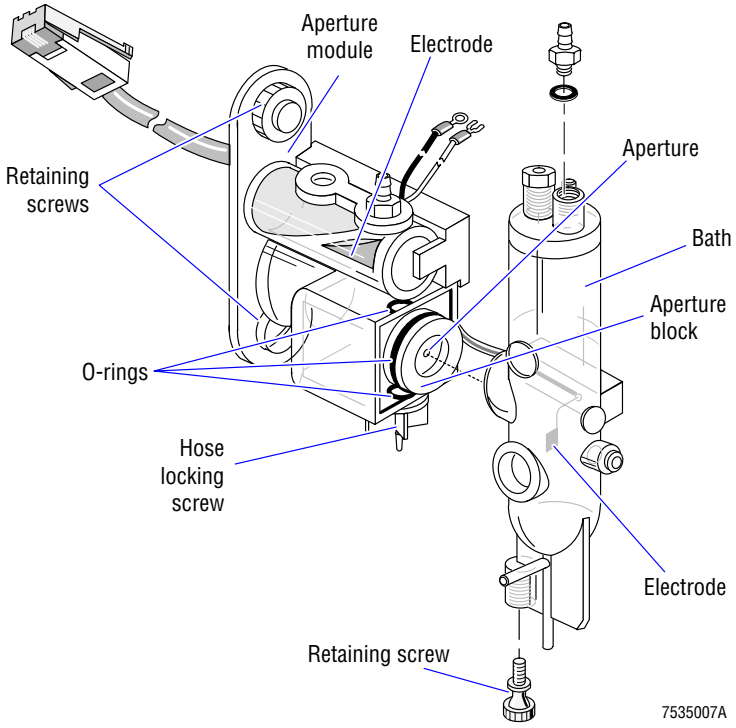

8. Separate the bath from the aperture housing with a gently rocking motion.
9. To remove the aperture block from the Aperture module.
   a. Loosen the fitting at the base of the Aperture module (Figure 4.28-1).
   b. Pull out the aperture block. Keep your fingers away from the aperture disk.

CAUTION Lubricant could damage the O-rings. Do not use any lubricant on the O-rings. Wet the O-rings with distilled water during reassembly.

10. If replacing the aperture block:
    a. Install new O-rings on the aperture block.
    b. Install the new aperture block in the aperture module.
    c. Go to Installation.
11. Inspect the aperture block O-rings and the bath mount O-ring, and replace if necessary.
12. To remove the Aperture module and bath assembly:
    a. Label and remove the tubing from the bath.
    b. Remove the tubing from the fittings on the Aperture module.
    c. Remove the retaining screws securing the Aperture module (Figure 4.28-1).
    d. Disconnect the signal cable from the Preamp card (Figure 4.28-1).
    e. Disconnect ground cable J25 (RBC) or J24 (WBC).
    f. Push the pins out of the connector.
    g. Cut any tie wraps holding the signal cables together.
    h. Pull the Aperture module forward.

Installation

CAUTION Lubricant could damage the O-rings. Do not use any lubricant on the O-rings. Wet the O-rings with distilled water during reassembly.

1. Reassemble and install the components in the reverse order of removing them. Ensure that the junction points are free of salt deposits and that all the O-rings are in good condition.
2. If you removed the Hemoglobin Preamp module, reinstall it. Refer to Installation under Heading 4.27, HEMOGLOBIN PREAMP MODULE REPLACEMENT.
3. Reinstall the electromagnetic shield.
4. Close the front door and power up the instrument.
5. Verify the instrument is working correctly. Go to Verification.

Verification

1. If you replaced the aperture block:
    a. Do the CBC Latex Calibration and Verification procedure as directed under Heading 4.4, LATEX CALIBRATION AND VERIFICATION.
    b. Do Heading 4.7, INITIAL ADJUSTMENT OF PRIMARY-MODE CALIBRATION FACTORS.
    c. Advise the customer that you have changed the calibration and that they need to verify calibration of the Primary mode as outlined in the Special Procedures and Troubleshooting manual.

2. Verify instrument performance:
   a. Do a Start Up or System Test.
   b. Check reproducibility as instructed under Heading 4.5, REPRODUCIBILITY CHECKS.
   c. Run controls.

4.29 BSV AND BSV ACTUATOR DISASSEMBLY/REPLACEMENT

Purpose

Use the procedures in this section for:

- BSV Disassembly/Replacement
- BSV Actuator Replacement

BSV Disassembly/Replacement

Purpose

IMPORTANT The BSV sections are tested as a set to ensure alignment of the ports. Mixing sections from different sets could reduce control recovery and instrument performance. Replace all three sections of the BSV as a complete assembly.

Use this procedure to disassemble and remove a BSV.

Tools/Supplies Needed

- ❑ Paper towels
- ❑ Lint-free tissues

BSV Removal

1. Open the upper front door of the Main Unit to access the BSV.

Figure 4.29-1 Retaining the Probe-Slide Mechanism

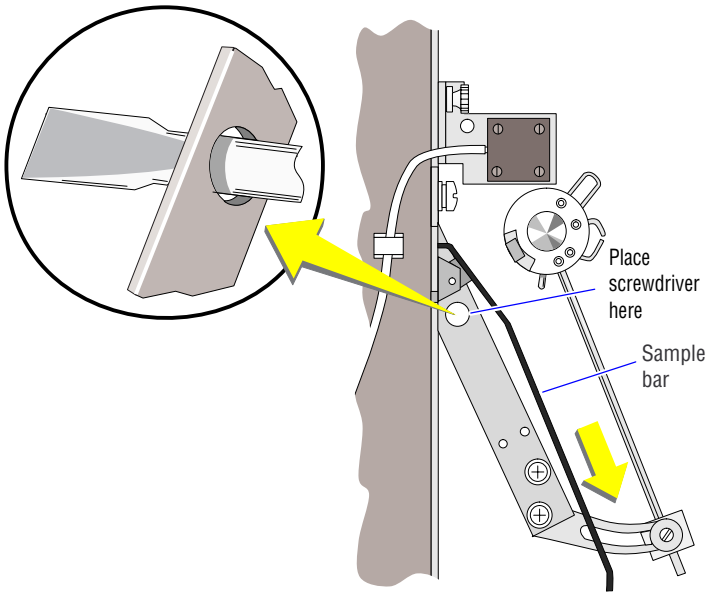

2. At the DMS, select **Special Functions ▸▸ Diagnostics ▸▸ Operator Options ▸▸ BSV Tests ▸▸ BSV Removal**.
3. Press Enter to initiate the function.
4. Power down the instrument as directed in Power Down/Power Up the System under Heading 4.1, GUIDELINES FOR SERVICING THE HmX ANALYZER.
5. Fully extend the rinse block.
6. Insert a screwdriver in the hole behind the sample bar to keep the probe-slide mechanism out of the way. See Figure 4.29-1.

Figure 4.29-2 Removing the Rinse Block Screw and Washer

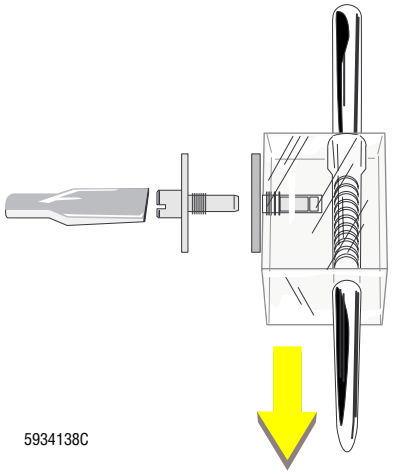

7. Remove the rinse block screw and washer:
   a. At the left side of the rinse block (Figure 4.29-2), remove the retaining screw and nylon washer.
   b. Set the hardware aside.
   c. Slide the rinse block off the end of the aspirator tip.
8. Move the blood detector out of the way:
   a. Remove the thumbscrew that holds the bracket.
   b. Position the blood detector over to the left, out of the way. Be careful not to kink the tubing.

IMPORTANT Damage to this aspirator tubing could cause partial aspirations. DO NOT bend, kink, crimp, or crush the tubing when disassembling the BSV.

9. Disassemble the BSV:
   a. Spread several layers of paper towels under the BSV.
   b. Unscrew the knob on the BSV shaft. Remove the knob.

CAUTION The end of the shaft could scratch the inside surfaces of the BSV sections. As you remove the BSV sections, slide them off carefully, ensuring that the inside surfaces do not contact the end of the shaft.

   c. Use your left hand to very carefully slide the left section of the BSV off the shaft; let it hang from its tubing.

CAUTION Pulling on the aspirator tip or on the metal loop of the BSV could damage the BSV. As you remove and separate the right and center sections of the BSV, avoid pulling on the aspirator tip and the metal loop.

   d. Slide the center and right sections off together.

      Note: Before you can get the BSV sections off, you may have to slightly rotate or wiggle the sections to align the grooves in the center shaft.

   e. Separate the center and right sections and let them hang from their tubing. **DO NOT** remove the arm or bushing from the actuator shaft.
10. If you are replacing the BSV, remove the tubing from the BSV ports.

BSV Installation

1. Assemble the BSV:
   a. If you are replacing the BSV, connect the tubing to the BSV ports.
   b. Align the right section of the BSV. Line up the notch with the guide post.
   c. Push the right section all the way to the right on the mounting and guide posts. Be sure that none of the tubing is pinched.

d. Align the center section of the BSV. Line up the key on the center section with the keyway on the guide post and the pin with the groove in the shaft.
e. Push the center section back to its position on the mounting post.
f. Line up the notch on the left section of the BSV with the guide post andline up the ball stud with the left section bracket. Put the aspirator tip inside the sample bar.
g. Push the left section back to its position on the mounting post.
h. Screw the knob on until it does not turn any more; this takes many turns.
i. Use lint-free tissues to dry off all wet portions, particularly around the BSV.

Figure 4.29-3 Replacing the Rinse Block

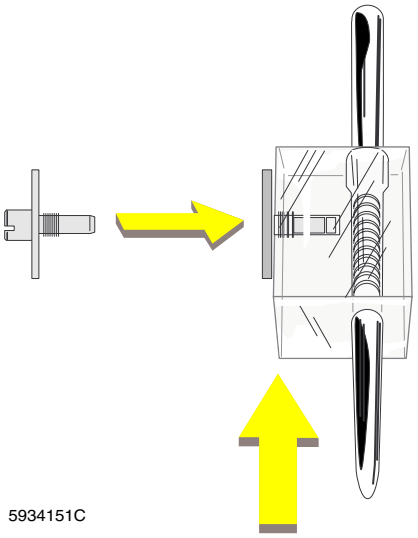

2. Screw the blood-detector bracket back on firmly.
3. Reinstall the rinse block (Figure 4.29-3):
   a. Slide the rinse block back onto the aspirator tip.
   b. Install the nylon washer and retaining screw. Make the screw finger tight, then tighten it 1/8 turn more with a screwdriver. Do not over tighten.
4. Remove the screwdriver you used to immobilize the area.
5. Verify that all tubing:
   - Is firmly attached
   - Goes under the shaft and guide post
   - Is not twisted or pinched.
6. Power up the instrument.
7. Verify the BSV assembly is working correctly. Go to BSV Disassembly/Replacement Verification below.

BSV Disassembly/Replacement Verification

1. From the Main menu, select **Diluter Functions ▸▸ Start Up**.
2. Press Enter to initiate the Startup cycle.
3. Check the BSV during the Startup cycle and verify:
   - The BSV is not leaking.
   - The BSV sections rotate smoothly.
   - The rinse block moves smoothly.
4. Close the upper front door.
5. Verify instrument performance:
   a. Do a Start Up or System Test.
   b. Check reproducibility as instructed under Heading 4.5, REPRODUCIBILITY CHECKS.
   c. Run controls.

BSV Actuator Replacement

Purpose

Currently two configurations of the BSV actuator (configuration A and configuration B) are in use. Use this procedure to replace either configuration.

Tools/Supplies Needed

- ❑ Four 0.093 i.d. fittings, PN 6232277
- ❑ Four O-rings, PN 2523062

CAUTION In configuration A of the BSV actuator assembly (Figure 4.29-4):

- The Allen screw is factory installed to a predetermined torque specification. Random adjustments can cause incomplete rotation of the BSV sections and leaking between the sections.
- The cylinder seals are tested for pressure leaks at the factory. Removing the seals can cause pressure leaks, compromising the operation of the BSV.

When replacing this configuration of the BSV actuator, do not adjust the Allen screw or remove the cylinder seals.

Figure 4.29-4 BSV Actuator (Configuration A) Allen Screw and Cylinder Seals

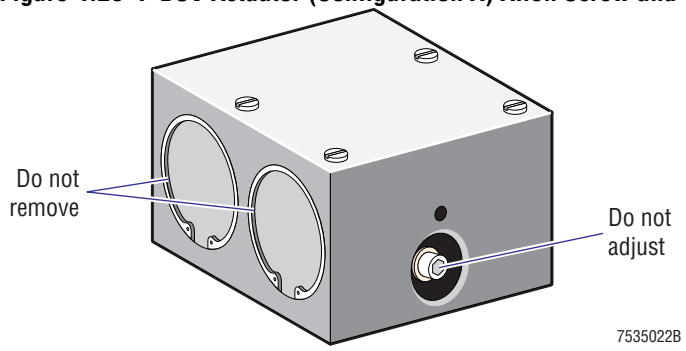

BSV Actuator Removal

1. Remove the BSV. See BSV Disassembly/Replacement above.
2. Remove the shaft bushing from the shaft of the actuator. For configuration A of the BSV actuator, see Figure 4.29-5. For configuration B, see Figure 4.29-6.
3. Remove the left section segmenting bracket from the shaft of the actuator. For bracket location, see Figure 4.29-5 (configuration A) or Figure 4.29-6 (configuration B).
4. Label the four tubings connected to the top of the actuator and disconnect the tubings from the actuator. For tubing identification, see Figure 4.29-5 (configuration A) or Figure 4.29-6 (configuration B).
5. Remove the three nuts (Figure 4.29-5) or screws (Figure 4.29-6) securing the alignment bar to the actuator and remove the alignment bar.
6. If the BSV actuator is configuration B (Figure 4.29-6), remove the three centering bushings from the BSV module.
7. Remove the actuator.
8. Return the actuator, the knob, the left section segmenting bracket, the shaft bushing (configuration B only) and the centering bushings (configuration B only) for repair.

Figure 4.29-5 BSV Actuator Removal, Configuration A

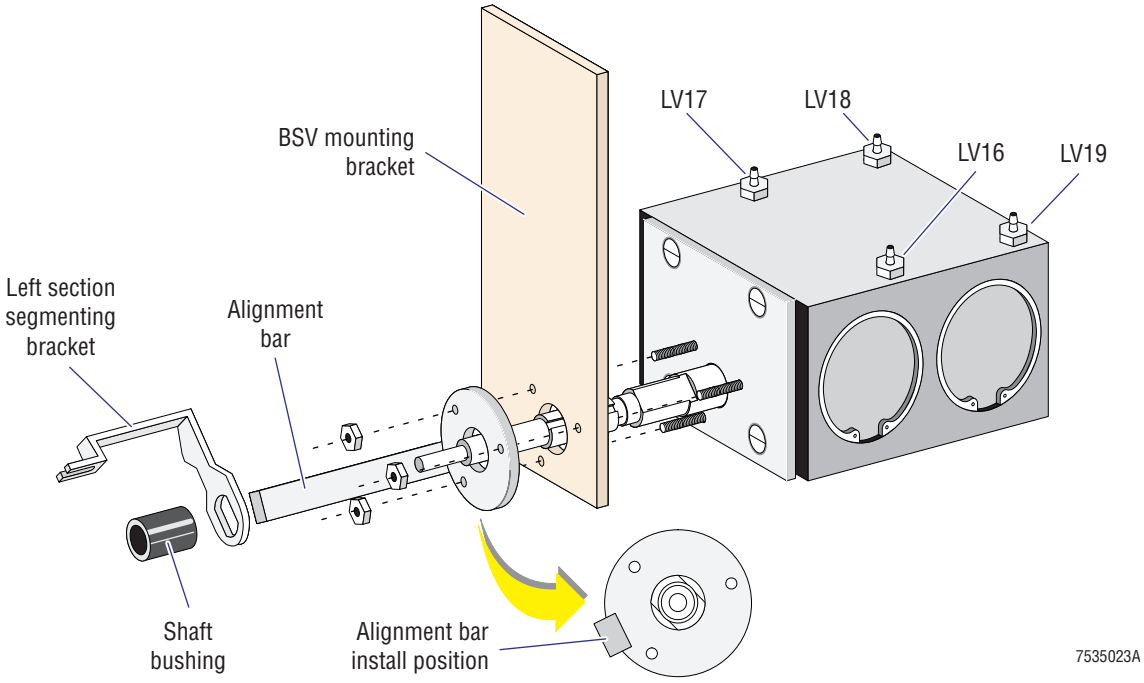

Figure 4.29-6 BSV Actuator Removal, Configuration B

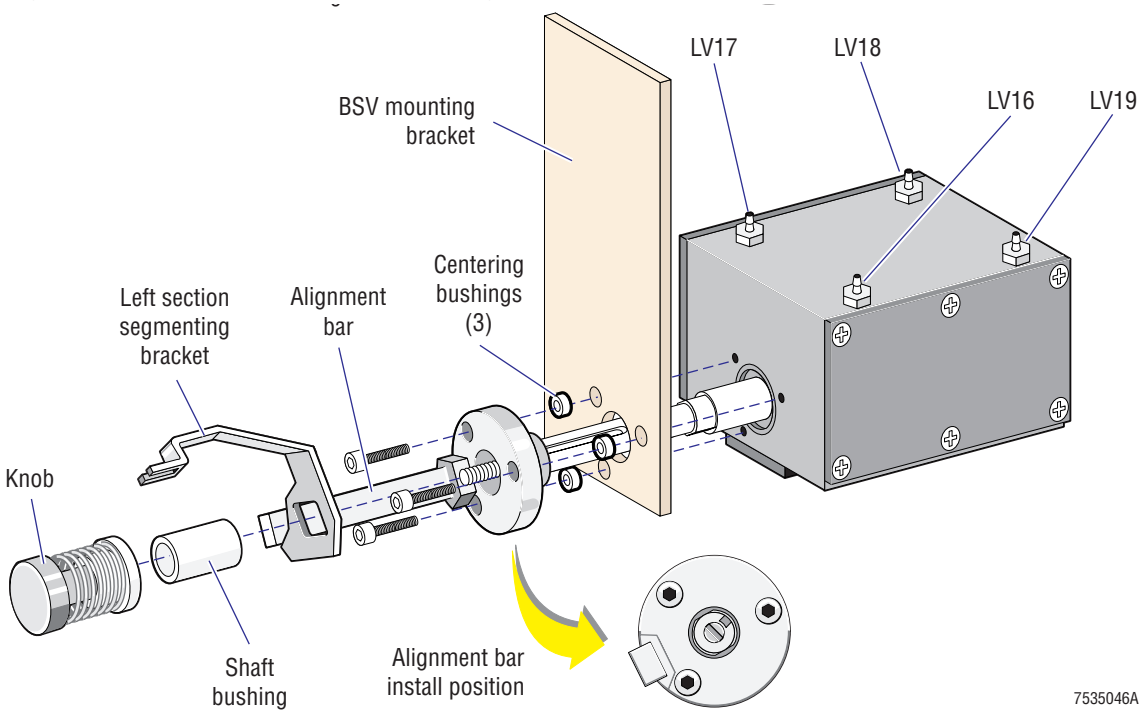

BSV Actuator Installation

1. Remove the four plastic screws from the new BSV actuator assembly and replace each with an O-ring and a 0.093 i.d. fitting.
2. Remove the knob and the shaft bushing (configuration B only) from the new BSV actuator assembly.

3. Note the position of the left section segmenting bracket and the alignment bar on the new BSV actuator assembly and then remove the following from the assembly:
   - Left section segmenting bracket
   - Alignment bar
   - Three screws (configuration B only)
   - Three centering bushings (configuration B only)

ATTENTION: While installing the shaft of the new BSV actuator assembly, hold the BSV tubing so that it will be located on the front side of the BSV shaft (the side closest to you and furthest away from the left section segmenting bracket and the BSV module panel).

4. Position the new BSV actuator assembly in the BSV module:
   a. Insert the shaft of the new BSV actuator assembly through the large hole in the BSV mounting bracket on the BSV module. Refer to Figure 4.29-5 (configuration A) or Figure 4.29-6 (configuration B).
   b. On configuration A of the BSV actuator assembly (Figure 4.29-5), align the three bolts extending from the BSV actuator assembly with the existing holes in the BSV module bracket.
   c. On configuration B of the BSV actuator assembly (Figure 4.29-6):
      1) Align the three holes in the new actuator assembly with the three holes in the BSV module.
      2) Insert the three centering bushings in the holes in the BSV module.
   d. Ensure the BSV tubing is located in front of the BSV shaft.
5. Slide the alignment bar onto the actuator shaft with the bar between the 8 and 9 o'clock positions as shown in Figure 4.29-5 (configuration A) or Figure 4.29-6 (configuration B), and secure the alignment bar with the three nuts (configuration A) or three screws (configuration B) provided with the new actuator assembly.
6. Ensure the cutouts in the BSV sections are free of crystallized diluent and cleaning agent.
7. Install the left section segmenting bracket supplied with the new BSV actuator assembly.

ATTENTION: On configuration A of the BSV actuator assembly (Figure 4.29-5), the opening of the shaft bushing that faces the actuator and rests on the shoulders of the actuator shaft is larger. If the orientation of this bushing is reversed, the bushing will not fit properly. On configuration B the shaft bushing does not have a specific orientation.

8. With the larger diameter opening of the shaft bushing facing the actuator (configuration A), slide the bushing onto the shaft and push it snug against the bracket.
9. Connect the four tubings labeled and removed in step 4 under BSV Actuator Removal, to the top of the actuator. For tubing identification, see Figure 4.29-5 (configuration A) or Figure 4.29-6 (configuration B).
10. Reinstall the BSV on the instrument. See BSV Installation under BSV Disassembly/Replacement above.
11. Verify the aspiration pump volume is correct as directed under Heading 4.17, ASPIRATION PUMP VOLUME ADJUSTMENT.

4.30 CAROUSEL MOTOR REPLACEMENT

Removal

1. Power down the instrument as directed in Power Down/Power Up the System under Heading 4.1, GUIDELINES FOR SERVICING THE HmX ANALYZER.
2. Open the upper and then the lower front doors and remove the front panel.
3. Disconnect J1 from the Rotary Cap Pierce Junction II card.
4. Remove the motor wires from J1, pins 37, 38, 39, and 40.
5. Loosen the upper setscrew on the upper end of the carousel motor coupling one-half turn. See Figure 4.30-1.

Figure 4.30-1 Carousel Motor and Carousel Assembly

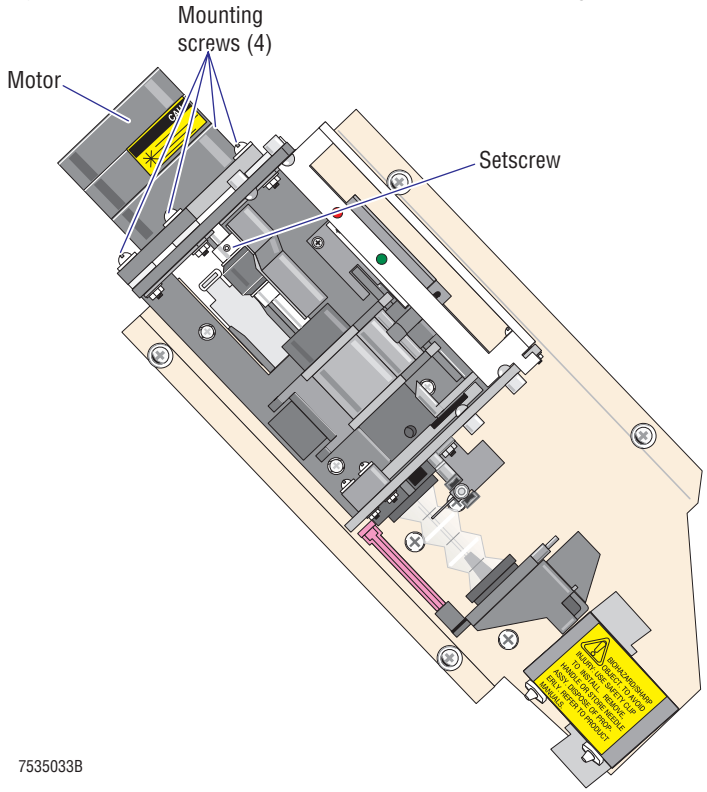

6. Remove the four mounting screws that hold the tube guides, nut plates, and motor to the mounting bracket. See Figure 4.30-1.
7. Remove the motor and spacers.

Installation

CAUTION Over-torquing the mounting screws can damage the spacers and prevent the motor from "floating" in its mounting holes. When installing the mounting screws, be careful not to over-tighten them.

1. Install the motor (with the flat side of the motor shaft toward the coupling setscrew), spacers, nut plates, and screws onto the mounting bracket. Refer to Figure 4.30-1. Tighten the screws to 6 in. lb of torque.

2. Tighten the setscrew that holds motor shaft to coupling (Figure 4.30-1).
3. Install the wires from the new motor to J1:

Attach:	**To:**
Wire 6	Pin 38
Wire 7	Pin 39
Wire 8	Pin 40
Wire 9	Pin 37

4. Reconnect J1 to the Rotary Cap Pierce Junction II card.
5. Reinstall the front panel and close the lower and upper front doors.
6. Power up the instrument.
7. Verify the instrument is working correctly. Go to Verification.

Verification

Verify instrument performance:

1. Do a Start Up or System Test.
2. Check reproducibility as instructed under Heading 4.5, REPRODUCIBILITY CHECKS.
3. Run controls.

4.31 CODE WHEEL ALIGNMENT

Tools/Supplies Needed

- ❑ Three empty specimen tubes

Procedure

1. Turn off the compressor:
   a. From the Main menu, select **Special Functions ▸▸ Diagnostics ▸▸ Operator Diagnostics ▸▸ Fluidics Tests ▸▸ Compressor On/Off**.
   b. Follow the directions on the screen to turn the compressor OFF. Allow time for the compressor to shut off.
2. Press Esc as often as necessary to return the DMS to the Main menu. (This prevents the instrument from accidentally cycling while working in the cap-pierce carousel area.)
3. Set the oscilloscope:

Input:	Channel 1
Vertical:	1.0 V/div.
Horizontal:	20 ms/div.
Synch:	Auto/normal
Probe:	X1

4. Remove the left-side panel of the Main Unit to access the Sample Handler card.
5. Locate circuit chip U35 on the left side of the Sample Handler card, about half-way down from the top of the card. Refer to Figure A.2-11.

CAUTION Touching the oscilloscope lead across any pins on U35 could cause a short circuit. Be careful when connecting the oscilloscope lead to pin 5 on U35.

6. Connect oscilloscope channel 1 to pin 5 (normal tube size) on U35 of the Sample Handler card.
7. Verify that the normal size tube holder is in home position, approximately centered with tube slot in instrument door.
8. Loosen the code wheel nut until the code wheel can be manually rotated. See Figure 4.31-1.

CAUTION Forcing the needle tip against the carousel could damage the needle. If the needle does not pass easily through the 0.076-in. alignment hole, verify proper carousel positioning.

9. Ensure that the normal size tube holder is in the proper position (as in step 7 above), and push the needle up carefully and slowly until it passes through the 0.076-in. alignment hole, located 180 degrees away from the normal size tube position.

10. Hold the needle in position. Find the trailing edge of the code wheel (marked H) on the side of the larger lobe (Figure 4.31-1).
    a. Rotate the code wheel slowly clockwise (with respect to looking up at the code wheel) until sensor U3 senses light and the oscilloscope signal goes low.
    b. Maintain the position of the code wheel, and tighten the code wheel nut to about 4 in. lb.

Figure 4.31-1 Code Wheel

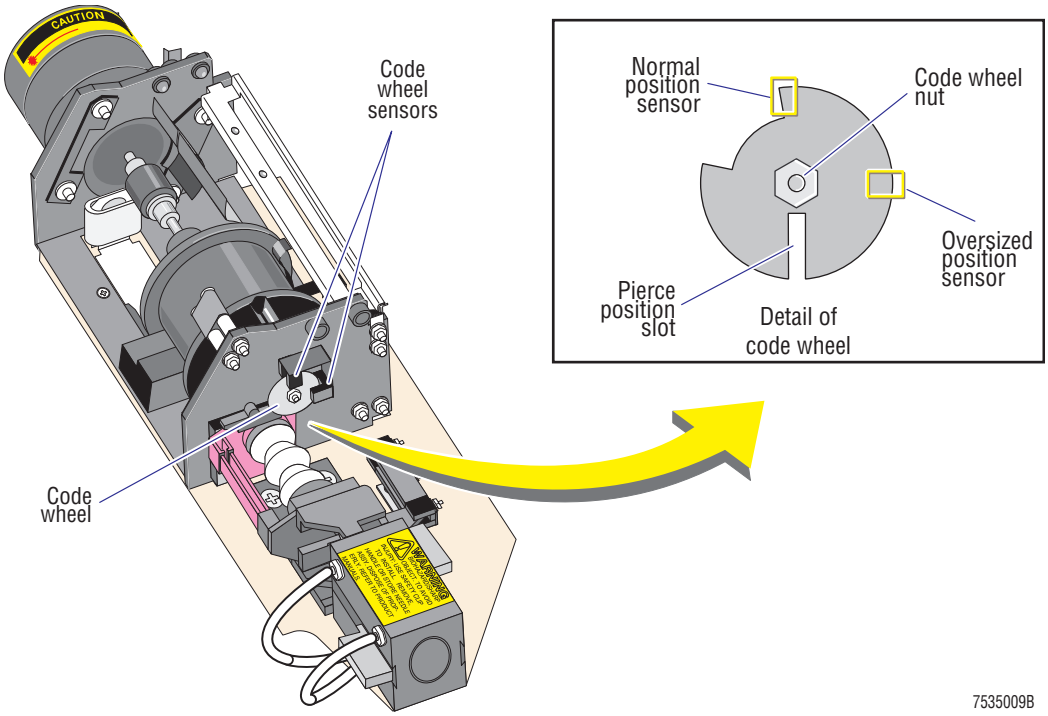

11. Retract the needle from the alignment hole.
12. Rotate the carousel clockwise (with respect to looking up from the code wheel toward the stepper motor) until the signal goes high.
13. Continue rotating, stopping immediately when the signal goes low. The carousel is now in the pierce position for normal size tubes.
14. Carefully extend the needle through the 0.188-in. diameter hole in the carousel.
15. Ensure that the needle does not rub against the edge of the 0.188 in. hole and that the needle is approximately centered in the hole.
    - If the needle is not centered in the hole, slightly adjust sensor U3, and repeat steps 7 through 14.
    - If the needle is centered in the hole, go to step 16.
16. Retract the needle from the carousel.
17. Move the oscilloscope channel 1 to pin 9 (oversize tube) on U35 of the Sample Handler card.
18. Verify that the oversize tube holder (identified with a white insert) is in home position, approximately centered with the slot in the instrument door.

19. Push the needle carefully through the 0.076-in. alignment hole, located 180 degrees from the oversize tube slot.
20. Observe the oscilloscope signal.
    - If the signal is high, loosen and adjust the oversize sensor until the signal goes low, then tighten the sensor hardware.
    - If the signal is low, go to step 21.
21. Retract the needle from the alignment hole.
22. Rotate the carousel clockwise until the signal goes high. Continue rotation until the signal goes low. This is the oversize tube pierce position.
23. Extend the needle through the 0.188-in. tube pierce hole in the carousel bracket and carrier.
24. Ensure that the needle does not rub against the edge of the 0.188-in. hole and that the needle is approximately centered in the hole.
    - If the needle is not centered in 0.188-in. hole, repeat from step 17.
    - If the needle is centered, go to step 25.
25. Retract the needle.
26. Reinstall the left-side panel.
27. Turn the compressor ON (**Special Functions ▸▸ Diagnostics ▸▸ Operator Diagnostics ▸▸ Fluidics Tests ▸▸ Compressor On/Off**) and verify the instrument is working correctly. Go to Verification.

Verification

1. From the Main menu, select **Sample Analysis ▸▸ Run Samples** and select a Primary-mode cycle.
2. Cycle the instrument with normal and oversize tube options to verify operation and adjustment of code wheel and sensors.
3. Verify instrument performance:
    a. Do a Start Up or System Test.
    b. Check reproducibility as instructed under Heading 4.5, REPRODUCIBILITY CHECKS.
    c. Run controls.

4.32 NEEDLE REPLACEMENT

Needle Replacement - HmX Analyzer with Autoloader Module

Purpose

Use this procedure to replace a needle cartridge on a HmX analyzer with Autoloader module.

Tools/Supplies Needed

- ❑ Needle cartridge (safety clip included)
- ❑ Distilled water
- ❑ Cotton swabs
- ❑ High-quality, fragrance-free bleach (5% sodium hypochlorite)
- ❑ Clean specimen tube with a pierceable stopper

Procedure

WARNING Biohazardous material could be contained in components in this area and could cause contamination unless handled with care. Wear protective gear and dispose of components in accordance with your local regulations and laboratory mandated safety procedures.

Figure 4.32-1 Cleaning Solution

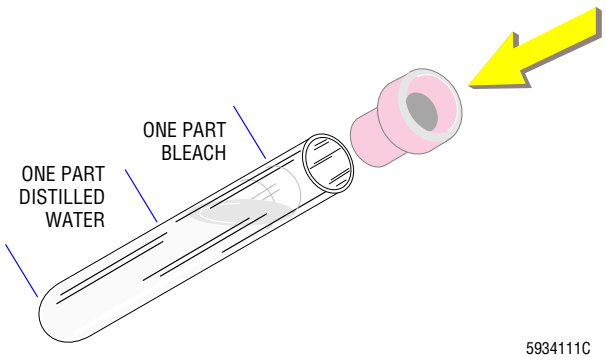

Figure 4.32-2 Cassette into Loading Bay

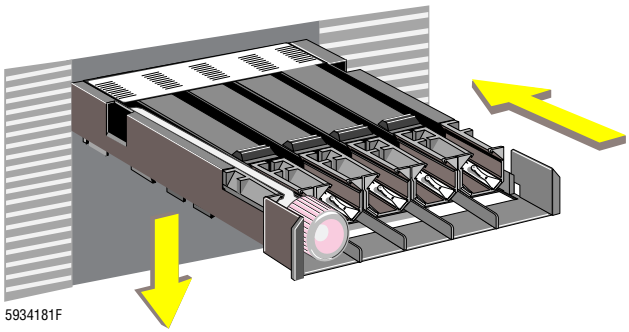

1. Is the needle you are replacing bent so that it cannot pierce a specimen tube cap?
   - If yes, skip to step 3.
   - If no, clean the needle. Go to step 2.
2. Clean the needle:
   a. Fill the clean specimen tube (Figure 4.32-1) with a fresh solution of -
      - One-part, high-quality, fragrance-free bleach (5% sodium hypochlorite)
      - One-part, distilled water.
   b. Cap the tube with a pierceable stopper.
   c. Insert the tube into a cassette and place the cassette in the loading bay. See Figure 4.32-2.
   d. Select **Special Functions ▸▸ Diagnostics ▸▸ Operator Options ▸▸ Fluidic Tests ▸▸ Clean Needle**.
   e. Follow the on-screen instructions.
   f. Wait until *SELECT FUNCTION* appears on the screen.

Figure 4.32-3 Safety Clip Installation

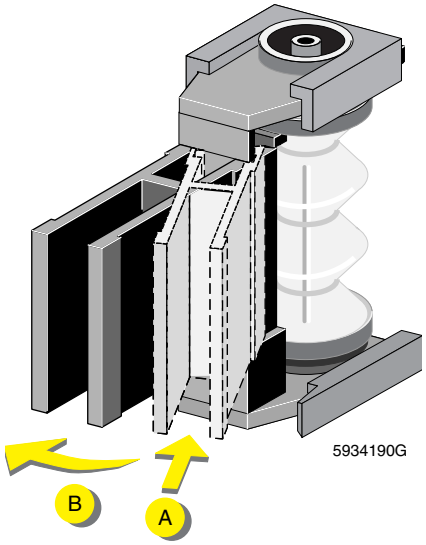

3. Bleed residual pressure from the system. Select **Special Functions ▸▸ Diagnostics ▸▸ Operator Options ▸▸ Drain and Vent**..
4. Power down the instrument as directed in Power Down/Power Up the System under Heading 4.1, GUIDELINES FOR SERVICING THE HmX ANALYZER.
5. Open the upper and then the lower front doors.

WARNING The needle is very sharp and can inflict severe injury. The used one could contain biohazardous material. Handle the needle cartridge with extreme care. Always use the safety clip to remove and install the needle cartridge. It protects you from possible needle puncture.

6. Attach the safety clip to the front support of the needle cartridge. See Figure 4.32-3.
   a. Without squeezing the safety clip, fit the right edge of the safety clip into the groove on the right side of the front support of the needle cartridge.
   b. Slide the safety clip to the left until its left edge snaps into the groove on the left side of the front support of the needle cartridge with a click.
   c. Check that the safety clip is securely attached to the needle assembly.

Figure 4.32-4 Needle Cartridge Removal

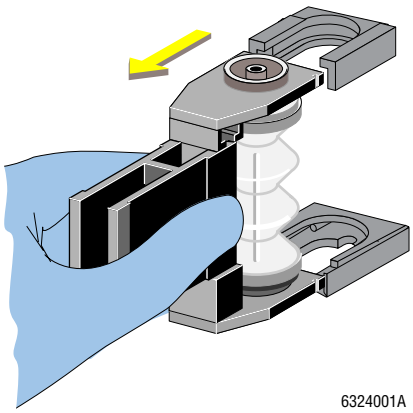

7. Pull out the needle cartridge. See Figure 4.32-4.

Figure 4.32-5 Needle Assembly Location Grooves

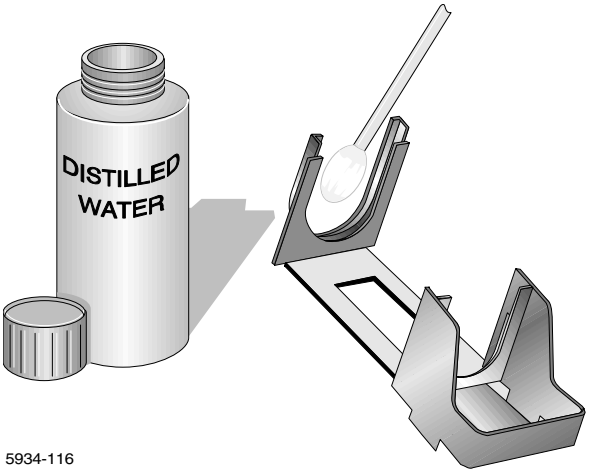

8. Use a cotton swab and distilled water to clean the upper and lower grooves where the needle assembly fits. See Figure 4.32-5.

Figure 4.32-6 Needle Assembly Tubing

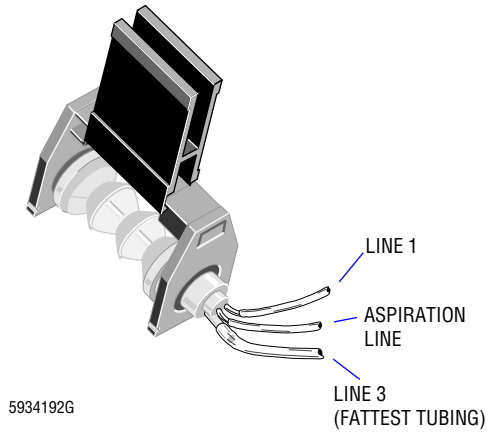

WARNING During this procedure, always direct the needle cartridge opening away from you to prevent accidental injury. A safety clip comes attached to the new needle cartridge. If the safety clip is missing, attach one to the new needle cartridge before proceeding.

9. Connect the aspiration line (Figure 4.32-6):
   a. Remove the aspiration line (tube not numbered) from the old needle assembly, using pliers to push the line up and off of its fitting. Be careful not to cut the tubing.
   b. Transfer the aspiration line to the new needle assembly.

ATTENTION: The needle assembly is available both with and without needle lines 1 and 3.

10. If the new needle assembly does not include lines 1 and 3 -
    a. Carefully remove needle lines 1 and 3 from the old needle cartridge (Figure 4.32-6), using pliers to push them up and off the fittings.
    b. Transfer needle lines 1 and 3 to the fittings on the new needle cartridge.

Figure 4.32-7 Needle Tubing Quick Disconnects

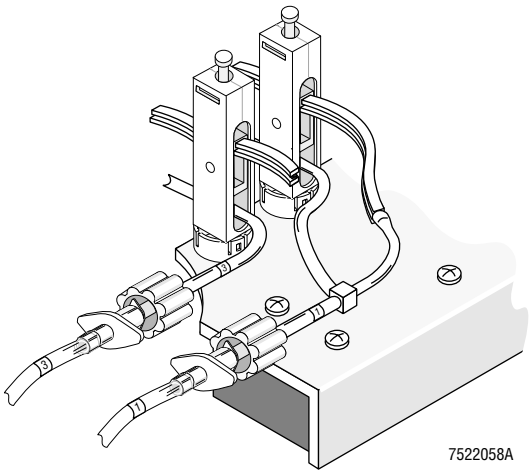

11. If the new needle assembly includes lines 1 and 3 -
    a. Disconnect the old needle assembly's lines 1 and 3 at the quick disconnects located on the left side of the Pump module. See Figure 4.32-7.

       Note: Do not remove these lines from the fittings at the back of the needle cartridge.

    b. Connect the new needle assembly's lines 1 and 3 to their corresponding quick disconnect fittings.
12. Dispose of the used needle assembly according to the customer's laboratory protocol.

Figure 4.32-8 Needle Assembly Installation

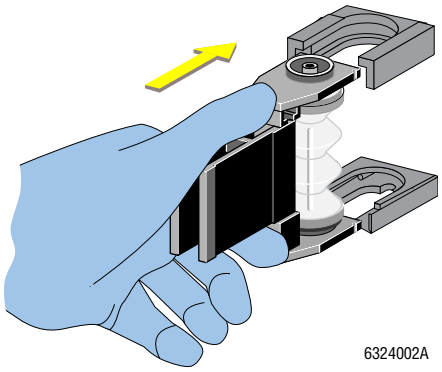

13. Slide in the new needle cartridge until it clicks into place (Figure 4.32-8).

    Note: The lock spring at the bottom of the needle assembly is slightly raised when the needle assembly is properly inserted.

Figure 4.32-9 Safety Clip Removal

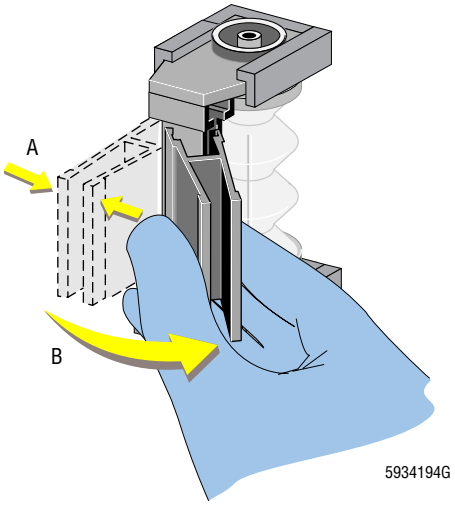

14. Remove the safety clip (Figure 4.32-9):
    a. Slightly squeeze the safety clip to move it a little to the right to separate the left side of the clip from the needle assembly.
    b. Continue to move the clip to the right to free it from the needle assembly.
15. Close the upper and front doors and power up the instrument.
16. Verify the instrument is working correctly. Go to Verification at the end of this section.

Needle Replacement - HmX Analyzer with Rotary Cap-Pierce Module

Purpose

Use this procedure to replace a needle on a HmX analyzer with a Rotary Cap-Pierce module.

Tools/Supplies Needed

- ❑ Needle assembly
- ❑ Distilled water
- ❑ High-quality, fragrance-free bleach (5% sodium hypochlorite)
- ❑ Clean specimen tube with a pierceable stopper

Procedure

WARNING Biohazardous material could be contained in components in this area and could cause contamination unless handled with care. Wear protective gear and dispose of components in accordance with your local regulations and laboratory mandated safety procedures.

Figure 4.32-10 Cleaning Solution

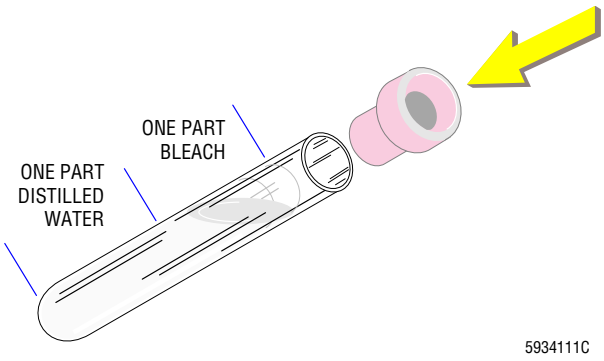

1. Is the needle you are replacing bent so that it cannot pierce a specimen tube cap?
   - If yes, skip to step 3.
   - If no, clean the needle. Go to step 2.
2. Clean the needle:
   a. Fill the clean specimen tube (Figure 4.32-10) with a fresh solution of -
      - One-part, high-quality, fragrance-free bleach (5% sodium hypochlorite)
      - One-part, distilled water.
   b. Cap the tube with a pierceable stopper.
   c. Select **Special Functions ▸▸ Diagnostics ▸▸ Operator Options ▸▸ Fluidic Tests ▸▸ Clean Needle**.
   d. Follow the on-screen instructions.
   e. Wait until *SELECT FUNCTION* appears on the screen.

Figure 4.32-11 Exit Tray Removal

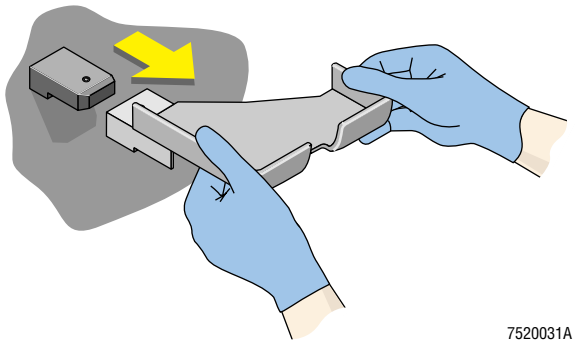

Figure 4.32-12 Safety Clip Attachment

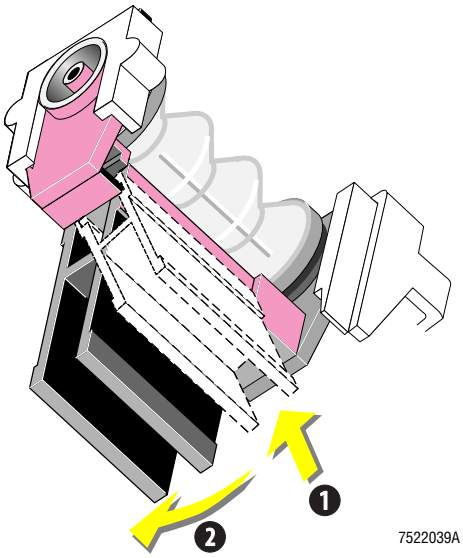

Figure 4.32-13 Needle Cartridge Removal

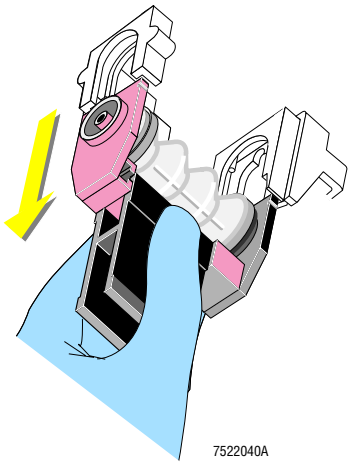

3. Bleed residual pressure from the system. Select **Special Functions ▸▸ Diagnostics ▸▸ Operator Options ▸▸ Drain and Vent**..
4. Power down the instrument as directed in Power Down/Power Up the System under Heading 4.1, GUIDELINES FOR SERVICING THE HmX ANALYZER.
5. Open the upper and then the lower front doors.
6. Remove the exit tray by pulling it toward you. See Figure 4.32-11.

WARNING The needle is very sharp and can inflict severe injury. The used one could contain biohazardous material. Handle the needle cartridge with extreme care. Always use the safety clip to remove and install the needle cartridge. It protects you from possible needle puncture.

7. Attach the safety clip to the front support of the needle cartridge.
   a. Without squeezing the safety clip, fit the right edge of the safety clip into the groove on the right side of the front support of the needle cartridge. See Figure 4.32-12.
   b. Slide the safety clip to the left until its left edge snaps into the groove on the left side of the front support of the needle cartridge with a click.
   c. Check that the safety clip is securely attached to the needle assembly.
8. Pull out the needle cartridge. See Figure 4.32-13.

Figure 4.32-14 Needle Assembly Location Grooves

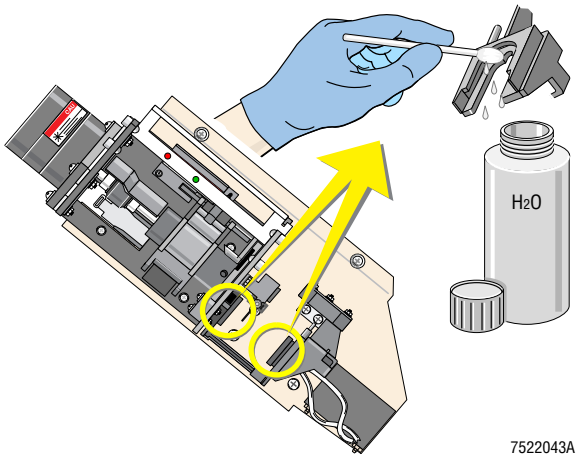

9. Use a cotton swab and distilled water to clean the upper and lower grooves where the needle assembly fits. See Figure 4.32-14.

Figure 4.32-15 Needle Assembly Tubing

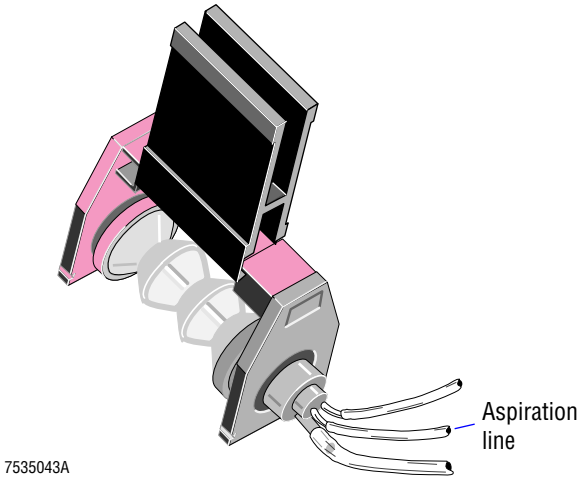

WARNING During this procedure, always direct the needle cartridge opening away from you to prevent accidental injury. A safety clip comes attached to the new needle cartridge. If the safety clip is missing, attach one to the new needle cartridge before proceeding.

10. Connect the aspiration line (Figure 4.32-15):
    a. Remove the aspiration line (tube not numbered) from the old needle assembly, using pliers to push the line up and off of its fitting. Be careful not to cut the tubing.
    b. Transfer the aspiration line to the new needle assembly.

ATTENTION: The needle assembly is available both with and without needle lines 1 and 3 and their associated Luer fittings.

11. If the new needle assembly does not include lines 1 and 3 -
    a. Carefully remove needle lines 1 and 3 from the old needle cartridge (Figure 4.32-15), using pliers to push them up and off the fittings.
    b. Transfer needle lines 1 and 3 to the fittings on the new needle cartridge.

Figure 4.32-16 Needle Tubing Quick Disconnects

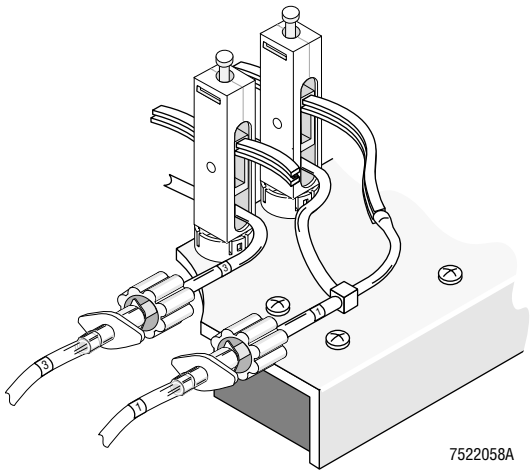

12. If the new needle assembly includes lines 1 and 3 -

    a. Disconnect the old needle assembly's lines 1 and 3 at the quick disconnects located on the left side of the Pump module. See Figure 4.32-16.

    Note: Do not remove these lines from the fittings at the back of the needle cartridge.

    b. Connect the new needle assembly's lines 1 and 3 to their corresponding quick disconnect fittings.

Figure 4.32-17 Needle Assembly Installation

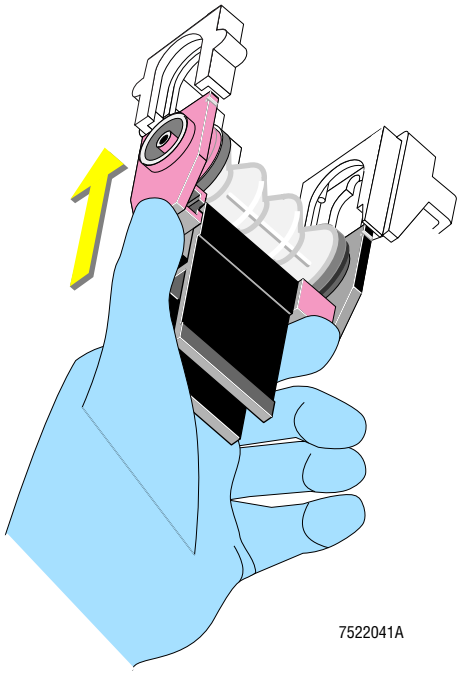

13. Slide in the new needle cartridge until it clicks into place. See Figure 4.32-17.

    Note: The silver lock spring at the bottom of the needle assembly is slightly raised when the needle assembly is properly inserted.

Figure 4.32-18 Safety Clip Removal

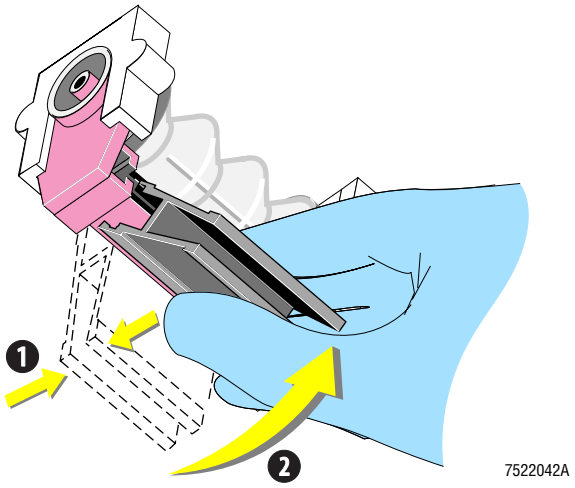

14. Remove the safety clip.
    a. Slightly squeeze the safety clip to move it a little to the right to separate the left side of the clip from the needle assembly. See Figure 4.32-18.
    b. Continue to move the clip to the right to free it from the needle assembly.

Figure 4.32-19 Exit Tray Reinstallation

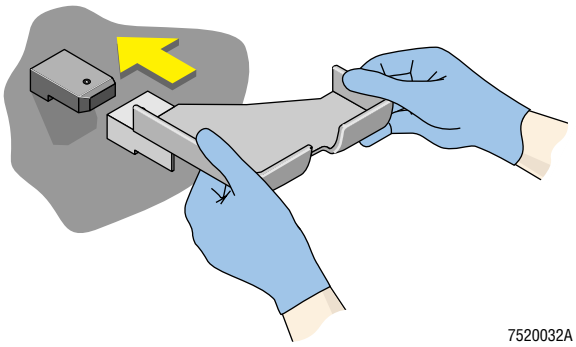

15. Replace the tube exit tray. See Figure 4.32-19.
16. Close the upper and lower front doors and power up the instrument.
17. Verify the instrument is working correctly. Go to Verification.

Verification

1. Select **Diluter Functions ▸▸ Prime Reagents ▸▸ Diluent**.
2. When priming is finished, open the lower front door and check for possible tubing leaks.
3. Verify instrument performance:
    a. Do a Start Up or System Test.
    b. Check reproducibility as instructed under Heading 4.5, REPRODUCIBILITY CHECKS.
    c. Run controls.

4.33 RINSE BLOCK ADJUSTMENT

Tools/Supplies Needed

- ❑ Service Disk

Procedure

1. Ensure that the instrument and the DMS are ON.
2. Activate the service options as directed under Heading 4.2, USING THE SERVICE DISK.
3. If *Select Function* does not appear on the DMS, press F9 to stop the active function.
4. From the Service Options menu, select **Solenoid Test.**
5. Energize LV20, LV40 and LV45:
   a. Use ↑↓ to select LV20 (Probe Clean), and press Enter.
   b. Use ↑↓ to select LV40 (Probe Vacuum), and press Enter.
   c. Use ↑↓ to select LV45 (Diff Waste), and press Enter.
   d. Press F2 to energize the solenoids. The solenoids remain energized for 10 minutes.

CAUTION Screwing in the Allen screw (Figure 4.33-1) while the rinse block is pulled down can groove the plastic stop that determines the final rinse block position, causing erratic movement of the rinse block. **DO NOT** screw the Allen screw IN (clockwise) while the rinse block is pulled down.

Figure 4.33-1 Rinse Block Adjusting Screw

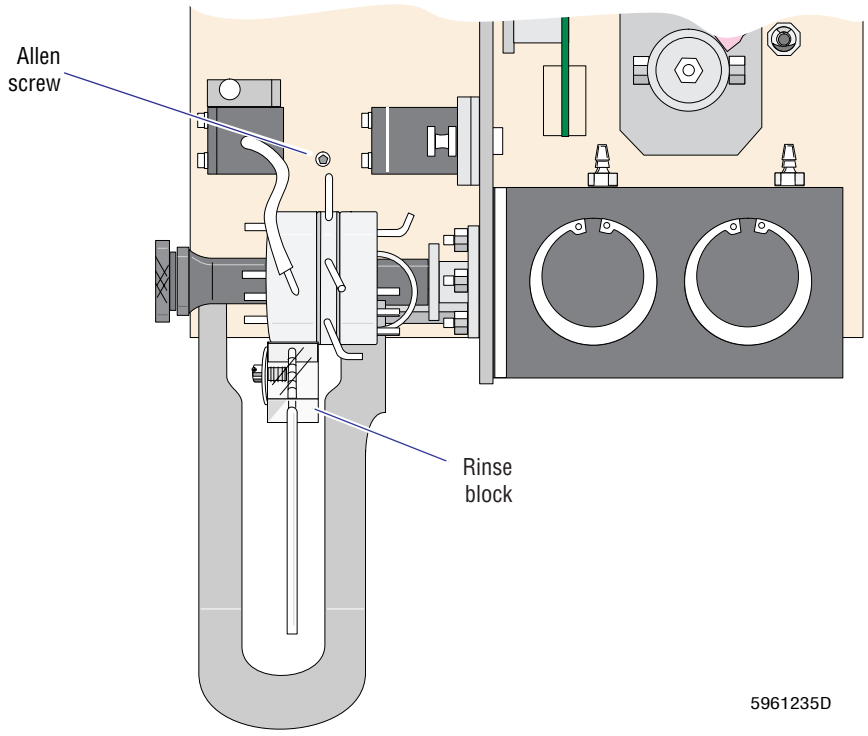

6. Adjust the Allen screw in the front panel (Figure 4.33-1) to align the center tubing on the rinse block with the hole in the back side of the aspirator tip. Make slight adjustments and check the position until the position is correct.
   - Clockwise (IN) raises the position of the rinse block.
   - Counterclockwise (OUT) lowers the position of the rinse block.
7. Verify the instrument is working correctly. Go to Verification.

Verification

Verify instrument performance:

1. Do a Start Up or System Test.
2. Check reproducibility as instructed under Heading 4.5, REPRODUCIBILITY CHECKS.
3. Run controls.

4.34 AUTOLOADER MODULE REMOVAL

Purpose

Use this procedure to remove and install an Autoloader module.

Tools/Supplies Needed

- ❑ Phillips-head screwdriver
- ❑ 5/16-in. hex-nut driver

Removal

1. Power down the instrument as directed in Power Down/Power Up the System under Heading 4.1, GUIDELINES FOR SERVICING THE HmX ANALYZER.
2. Open the upper and lower front doors of the Main Unit, and remove the front decorative panel from the Autoloader module.
3. Using the safety clip, remove the piercing-needle cartridge and rest it on the Pump module.
4. Disconnect the green stripe tubing at the #2 Luer lock from the front quick disconnect, QD14.
5. Loosen the two Phillips-head screws mounted along the front base of the Autoloader module to release the retaining brackets that secure the module into the chassis.
6. Pull the Autoloader module forward and slide it out about half-way.
7. Loosen the captive screw located on the top rear of the bar-code scanner cover.
8. Remove the bar-code scanner cover and rest it to the left of the Main Unit.
9. Unplug the gray bar-code scanner cable at the top of the scanner mechanism and rest it across the BSV module.
10. Remove the 5/16-in. hex nut securing a ground wire to E50 on the left side of the Autoloader module, then disconnect the ground wire.
11. Gently pull the Autoloader module forward until it stops.
12. Locate the two guide rails underneath the Autoloader module, then press the spring clips in (up) while continuing to pull the module forward. See Figures 4.34-1 and 4.34-2.
13. Carefully remove the Autoloader module from the chassis.

    Note: You may have to disconnect the aspirate tubing from the piercing needle to allow the module to come out all the way.
14. Disconnect the cables connected to the Autoloader Interface card at the rear of the Autoloader Module:
    - Unplug the 50-pin ribbon cable from J9 on the Autoloader Interface card linking the Autoloader module to the Sample Handler card.
    - Unplug the 2-pin cable at J17 on the Autoloader Interface card linking the **STOP** switch to the Autoloader Interface card.

Installation

1. To reinstall the Autoloader module, follow steps 1 through 14 above, in reverse order.
2. Verify the instrument is working correctly. Go to Verification.

Figure 4.34-1 Autoloader Module Guide Rails

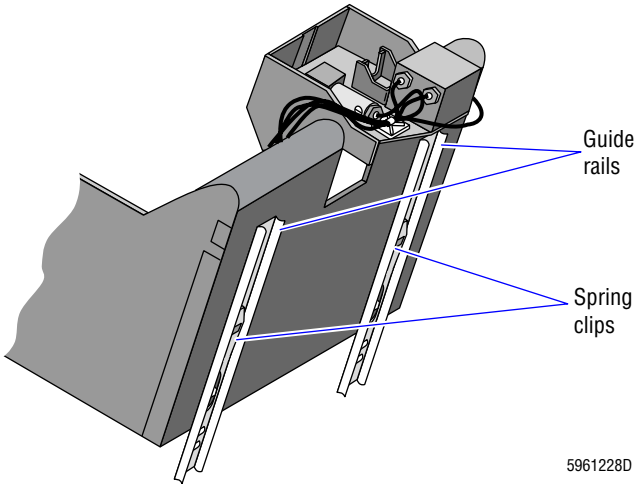

Figure 4.34-2 Autoloader Module Removal

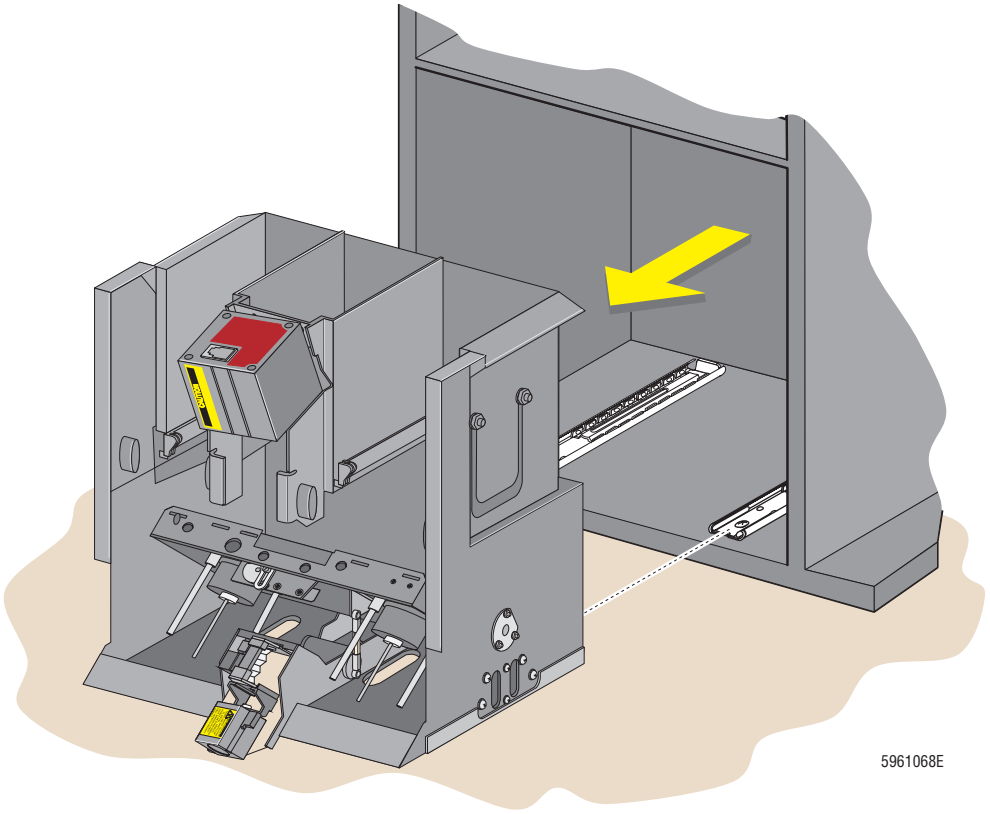

Verification

Verify instrument performance:

1. Do a Start Up or System Test.
2. Check reproducibility as instructed under Heading 4.5, REPRODUCIBILITY CHECKS.
3. Run controls.

4.35 ROCKER BED ASSEMBLY REMOVAL

Purpose

Use this procedure to remove and install a rocker bed assembly.

Tools/Supplies Needed

- ❑ 1/4-in. hex-nut driver
- ❑ Fine needle-nose pliers or E-clip spreaders

Removal

1. Power down the instrument and remove the Autoloader module as instructed under Heading 4.34, AUTOLOADER MODULE REMOVAL.
2. Push the right elevator up slightly and remove the small E-clip (Figure 4.35-1) that holds the rocker bed linkage to the rocker motor shaft located under the rocker bed near the base of the Autoloader housing.
3. Remove the rocker bed linkage (Figure 4.35-1) from the rocker motor shaft.

Figure 4.35-1 Rocker Bed Removal

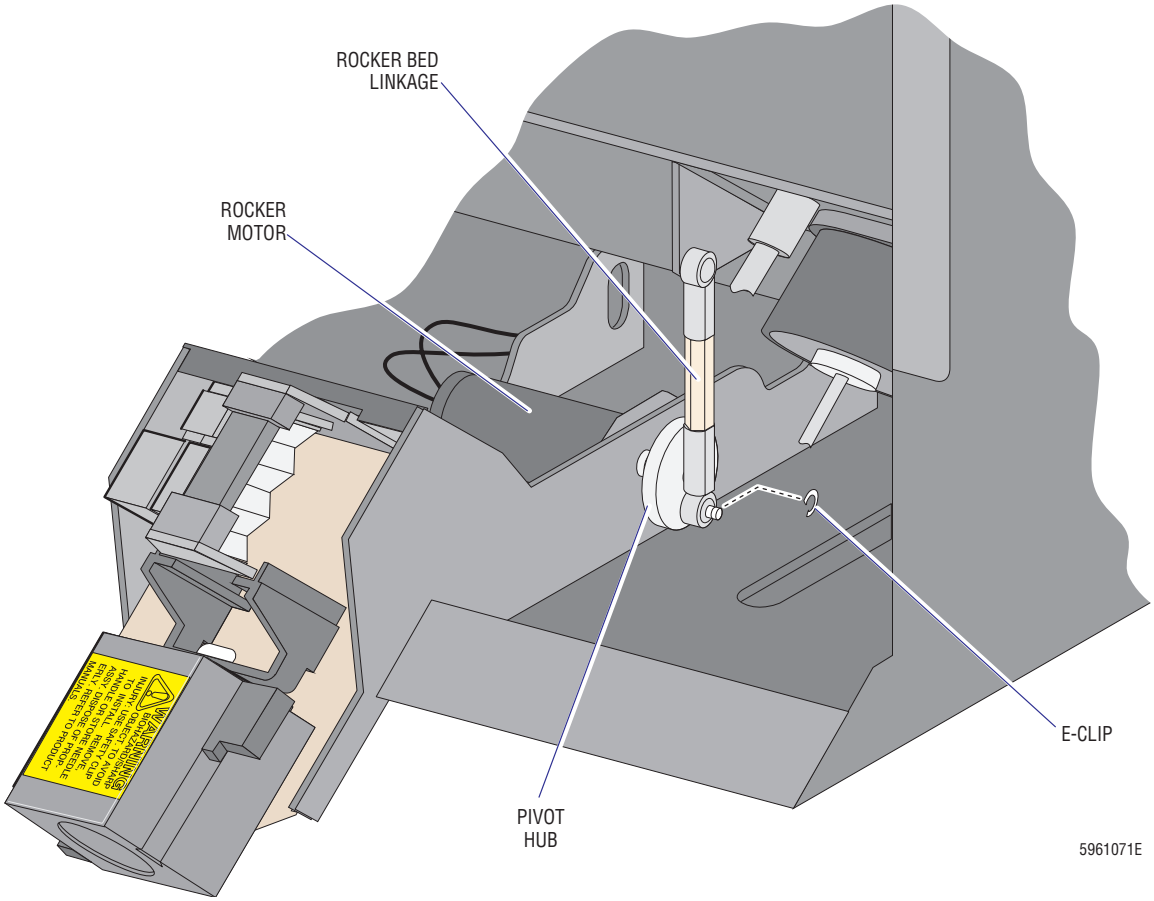

4. Locate and remove the three 1/4-in. hex nuts on the outer left side of the Autoloader module, then pull out the silver rocker bed pivot pin. See Figure 4.35-2.

   Note: The left end of the rocker bed contains a spring washer on the rocker bed pivot pin. When removing this washer, pay close attention to its location.

Figure 4.35-2 Rocker Bed Hardware

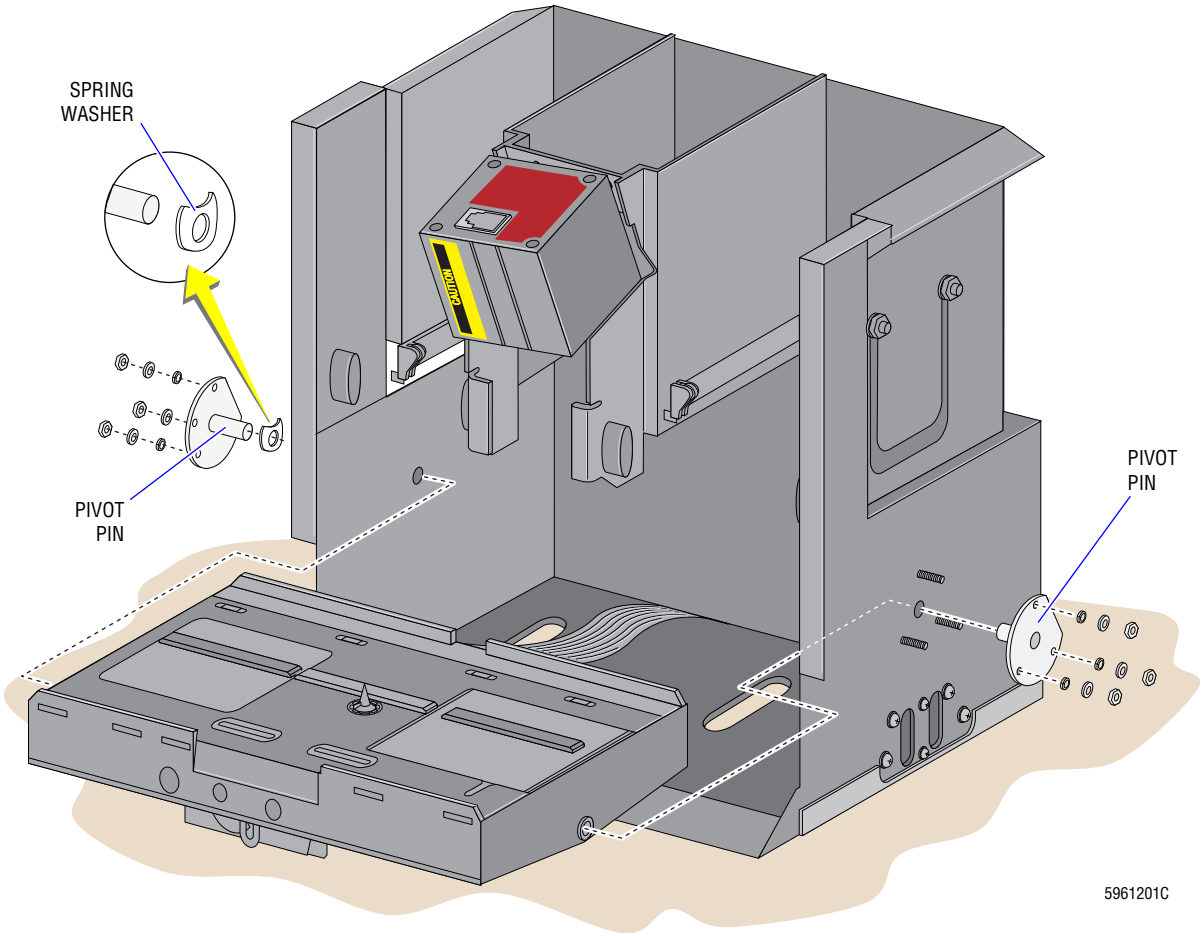

5. Locate and remove the three 1/4-in. hexnuts on the outer right side of the Autoloader module, then pull out the silver rocker bed pivot pin. See Figure 4.35-2.

   Note: The right end of the rocker bed does not contain a spring washer.

6. Unplug the black Hi-flex ribbon cable from P20 on the Autoloader Interface card.
7. Carefully slide the Autoloader Interface card out from underneath the left side of the rocker motor assembly. Be careful not to damage the red and black wires connected to the rocker motor.
8. Lift the rocker bed assembly forward and out of the Autoloader module.

Installation

1. To reinstall the rocker bed assembly, follow step 1 through 8 above, in reverse order. Ensure that the curved (convex) side of the spring washer is closest to the rocker bed.
2. Reinstall the Autoloader module. See Installation under Heading 4.34, AUTOLOADER MODULE REMOVAL.
3. Verify the instrument is working correctly. Go to Verification below.

Verification

Verify instrument performance:

1. Do a Start Up or System Test.
2. Check reproducibility as instructed under Heading 4.5, REPRODUCIBILITY CHECKS.
3. Run controls.

4.36 ELEVATOR PLATFORM STEPPER MOTOR REPLACEMENT

Purpose

Use this procedure to remove and replace either the load or unload elevator platform stepper motors.

Tools/Supplies Needed

- ❑ Phillips-head screwdriver
- ❑ 5/16 in. hex-nut driver

Removal

1. Power down the instrument and remove the Autoloader module as instructed under Heading 4.34, AUTOLOADER MODULE REMOVAL.
2. Remove the rocker bed assembly as instructed under Heading 4.35, ROCKER BED ASSEMBLY REMOVAL, beginning at step 2.
3. On the under side of the rocker bed, locate and remove the stepper motor from its mounting bracket:
   a. Unscrew and remove the two diagonally placed 5/16-in. hex nuts surrounding the motor.
   b. Unscrew and remove the corresponding Phillips-head screws. These screws are accessed through two holes on the top of the respective elevator platform at the top side of the rocker bed.

      Note: It may be necessary to manually lift the elevator to view the screw heads.
   c. Gently pull the motor down and off the lead-screw (threaded shaft) to remove the motor.

Installation

1. Install the stepper motor in the rocker bed assembly following step 3 a through 3 c above in reverse order.
2. Reinstall the rocker bed assembly. See Installation under Heading 4.35, ROCKER BED ASSEMBLY REMOVAL
3. Reinstall the Autoloader module. See Installation under Heading 4.34, AUTOLOADER MODULE REMOVAL.
4. Verify the instrument is working correctly. Go to Verification below.

Verification

Verify instrument performance:

1. Do a Start Up or System Test.
2. Check reproducibility as instructed under Heading 4.5, REPRODUCIBILITY CHECKS.
3. Run controls.

4.37 TUBE AVAILABLE SENSOR ASSEMBLY REPLACEMENT

Purpose

Use this procedure to remove and replace the tube available sensor assembly.

Tools/Supplies Needed

- ❑ Phillips-head screwdriver
- ❑ Small flathead screwdriver

Removal

1. Power down the instrument and remove the Autoloader module as instructed under Heading 4.34, AUTOLOADER MODULE REMOVAL.
2. Remove the rocker bed assembly as instructed under Heading 4.35, ROCKER BED ASSEMBLY REMOVAL, beginning at step 2.
3. Remove the Rocker Bed Interface card to access the tube available sensor assembly:
   a. Turn the rocker bed over to expose the under side.
   b. Remove the two screws securing the Rocker Bed Interface card to the rocker bed assembly.
   c. Disconnect the Rocker Bed Interface card and remove it.
4. Locate the clip-in tube available sensor assembly and remove the assembly by either of the following methods:
   - Push the sensor from the top side of the rocker bed.
   - Pry the sensor with a small flathead screwdriver from the under side of the rocker bed.

Installation

1. On the under side of the rocker bed, press the tube available sensor assembly (with a new sensor if needed) back into its **keyed** sensor hole.
2. Ensure that the sensor "springs" in and out smoothly.
3. Reconnect and reinstall the Rocker Bed Interface card.
4. Reinstall the rocker bed assembly. See Installation under Heading 4.35, ROCKER BED ASSEMBLY REMOVAL.
5. Reinstall the Autoloader module. See Installation under Heading 4.34, AUTOLOADER MODULE REMOVAL.
6. Verify the instrument is working correctly. Go to Verification below.

Verification

Verify instrument performance:

1. Do a Start Up or System Test.
2. Check reproducibility as instructed under Heading 4.5, REPRODUCIBILITY CHECKS.
3. Run controls.

4.38 BAR-CODE READER DECODER CARD CONFIGURATION

Purpose

Use the following procedure to reconfigure the Microscan™ Bar-Code Reader Decoder card for HmX analyzer customers under the following conditions.

- The customer has bar-code specifications that deviate from the current default settings for code types. If that is the case, you must reconfigure the settings on the Bar-Code Reader Decoder card according to the customer's requirements.
- The customer has a COULTER STKS analyzer in the same institution and uses the "COULTER CODABAR" Standard. If that is the case, you must reconfigure the Bar-Code Reader Decoder card so that C/D Aim = DISABLED or C/D Type = MOD-16.

Note: Configuration changes apply only to Code Types. See Table A.4-1, Bar-Code Reader Decoder Card Code Types Default Settings.

ATTENTION: The Communications, Operations, and User Outputs settings for the Bar-code Decoder card are set at the factory and are **NOT** to be changed from the default settings. These default settings are listed in the following tables for your reference:

- Table A.4-2, Bar-Code Reader Decoder Card Communications Default Settings
- Table A.4-3, Bar-Code Reader Decoder Card Operations Default Settings
- Table A.4-4, Bar-Code Reader Decoder Card User Outputs Default Settings

Tools/Supplies Needed

- ❑ Service Disk
- ❑ Bar-Code Reader Communications cable, PN 6028275

Procedure

Connecting the Bar-Code Communications Cable

1. Power down the instrument as directed in Power Down/Power Up the System under Heading 4.1, GUIDELINES FOR SERVICING THE HmX ANALYZER.
2. Remove the left-side panel and, if the Sample Handler card is covered, remove theSample Handler card cover to access the Sample Handler card area.
3. Check the area next to the blood/bubble detector connectors on the Sample Handler card for a 9-pin serial connector.
   - If a 9-pin serial connector is present, go to step 4.
   - If a 9-pin serial connector is not present:
     - If the instrument has a Rotary Cap-Pierce module, go to step 5.
     - If the instrument has an Auotloader module, go to step 7.

4. Install the Bar-Code Reader Communications cable:
   a. Connect one end of the Bar-Code Reader Communications cable to the 9-pin serial connector J8 next to the Sample Handler card.
   b. Connect the other end of the Communications cable to the 9-pin serial connector (COM1) on the rear of the DMS.
   c. Go to step 10.
5. If the instrument has a Rotary Cap-Pierce module:
   a. Open the lower front door to access the Bar-Code Reader Decoder card located behind the panel of the Rotary Cap-Pierce module.
   b. Go to step 8.
6. If the instrument has a Rotary Cap-Pierce module:
   a. Open the lower front door.
   b. Unfasten the four captive screws and remove the fifth screw securing the Rotary Cap-Pierce module.
   c. Partially remove the Cap-Pierce module to access the Bar-Code Reader Decoder card.
   d. Go to step 8.
7. If the instrument has an Autoloader module
   a. Partially remove the Autoloader module as instructed under Heading 4.34, AUTOLOADER MODULE REMOVAL to access the Bar-Code Reader Decoder card.

      Note: It is not necessary to completely remove the Autoloader module or to disconnect the rear cables of the module.
   b. Go to step 8.
8. Install the Bar-Code Reader Communications cable:
   a. Connect one end of the Bar-Code Reader Communications cable to the 9-pin serial port, J8, on the top, left side of the Bar-Code Reader Decoder card.
   b. Carefully route the Communications cable out the left side (near the Sample Handler card) of the instrument.
   c. Connect the other end of the Bar-Code Reader Communications cable to the 9-pin serial connector (COM 1) on the rear of the DMS.
9. On an instrument with an Autoloader module, slide Slide the Rotary Cap-Pierce module or the Autoloader module back into the instrument, but do not secure it.
10. Close the lower front door if it is open, and power up the instrument.

Selecting the Settings for the Microscan™ Bar-Code Reader Decoder Card

1. Access the Service Disk's software options as directed in Using the Service Disk Software on a DMS under Heading 4.2, USING THE SERVICE DISK.
2. Press Esc to access the Main menu.

3. Select **Utilities ▸▸ Communications** to start the SIMPCOM communications program.
   a. When the program first loads, ensure the communications settings are set to these default settings:
      - COM 1
      - BAUD RATE =1200
      - PARITY = ODD
      - DATA BITS = EIGHT
      - STOP BITS = ONE

      Note: These default communications settings are required for communication to the Bar-Code Reader Decoder card.
   b. If the settings are not correct, press F2 **Params** and select the appropriate settings.
4. Press F5 **Options**, enable **O-Show Outgoing Chars**, and then press Esc.

ATTENTION: The Configuration Program is case sensitive when dealing with the screen-movement keys. All the keys you press to move about the screen must be in upper case. If you press a screen-movement key in lower case, the command is not processed.

5. Type <D> (the less than symbol, upper-case D, the greater than symbol) to bring up the Microscan Systems, Inc. Configuration Program Main Menu. Table 4.38-1 shows you what keys to use to move through the menus and make selections in the Configuration Program.

Table 4.38-1 Moving Around the Microscan Screens

Entry	Function
<D>	Brings up Microscan Main Menu.
Esc	The screen displays *Exit or Main Menu (E, M).* Pressing E exits you from program. The prompt, *Do you want to save changes for power on?* appears. Press Y. Y = Yes, N = No.
M	Returns you to Microscan Main Menu.
Enter (carriage return)	Selects item indicated by cursor. This acts in a toggle fashion.
B	Returns you to previous menu item.
Spacebar or N	Moves cursor to next menu item.

ATTENTION: With the Microscan program, any character or keyboard command that is typed is processed. Consequently, if the wrong characters are entered, deleting/backspacing will not initiate the program. If you make a keying error, you may need to reboot the DMS and begin again.

6. Select **CODE TYPES** from the Microscan Main Menu (press Spacebar until **CODE TYPES** appears next to the cursor, then press Enter)

   The screen displays the Current Settings for Code Types menu. The default settings are listed in Table A.4-1, Bar-Code Reader Decoder Card Code Types Default Settings.
7. Change the code-type settings as required.

8. When you have changed all the necessary code-type settings, press Esc. The screen displays *Exit or Main Menu (E, M)*.
9. Select the appropriate choice from the two choices displayed.

   ATTENTION: You do not receive a visual confirmation letting you know that your changes were saved. The Bar-Code Reader Decoder card "beeps" when you use the save command correctly and your changes are saved. If you do not hear the "beep," you did not do the command correctly and you must start the program over again.

   - Press E to exit the program and save your changes.

     The screen displays *Do you want to save changes for power on?* Press Y. Make sure you press the upper-case Y.
   - Press M to return to the Main Menu without saving your changes.
10. When finished, remove the Service Disk from the drive.
11. To verify that the new settings were saved as the default settings for power up, turn the Standby/Reset switch to Standby (**0**) for 15 seconds, then back to Ready (**I**).
12. To verify that the bar-code reader is operating correctly, cycle several bar-code labeled specimen tubes and ensure the labels are read correctly.
13. If the bar-code reader is not reading the labels correctly, the new settings were not saved. Repeat this procedure.

Reassembling the Instrument for Operation

1. Power down the instrument as directed in Power Down/Power Up the System under Heading 4.1, GUIDELINES FOR SERVICING THE HmX ANALYZER.
2. Disconnect and remove the Bar-code Reader Communication cable from the Main Unit and the DMS.
3. On an instrument with a Rotary Cap-Pierce module and without the 9-pin serial connector J8 next to the Sample Handler card, install and secure the module.
4. On an instrument with an Autoloader module and without the 9-pin serial connector J8 next to the Sample Handler card, install and secure the Autoloader module using steps 2 through 9 of the Removal procedure under Heading 4.34, AUTOLOADER MODULE REMOVAL, in reverse order.
5. Reinstall the Sample Handler card cover and the left-side panel, and close the doors.
6. Power up the instrument and verify it is working correctly. Go to Verification.

Verification

Verify instrument performance:

1. Do a Start Up or System Test.
2. Check reproducibility as instructed under Heading 4.5, REPRODUCIBILITY CHECKS.
3. Run controls.

4.39 BAR-CODE SCANNER ALIGNMENT (FOR AUTOLOADER MODULE ONLY)

Purpose

Use the following procedure to adjust the position of the bar-code scanner to provide proper positioning of the laser beam across the sample tube and cassette position bar-code labels. The bar-code labels are scanned as the rocker bed rocks to mix the sample at the pierce position, thus the label is read on-the-fly.

This procedure should only be necessary if the scanner has been replaced or completely removed then reinstalled. It should be verified if the unit is experiencing frequent *No Read* errors.

Tools/Supplies Needed

- ❑ Service Disk
- ❑ Bar-Code Reader Communications cable, PN 6028275
- ❑ Phillips-head screwdriver
- ❑ Cassette loaded with bar-code labeled tubes

Procedure

Connecting the Bar-Code Communications Cable

1. Power down the instrument and partially remove the Autoloader module to gain access to the Bar-Code Reader Decoder card mounted on the rear wall of the autosampler cavity. Follow steps 1 through 9 under Heading 4.34, AUTOLOADER MODULE REMOVAL.

   Note: It is not necessary to completely remove the Autoloader module or to disconnect the rear cables of the module.

2. Connect the Bar-Code Reader Communications cable:
   a. Connect one end of the Communications cable to the 9-pin serial port, J8, on the left side of the Bar-Code Reader Decoder card.
   b. Remove the left-side panel of the instrument, and carefully route the Communications cable out the left side (near the Sample Handler card) of the instrument.
   c. Connect the other end of the Communications cable to the top 9-pin serial connector on the rear of the DMS or an equivalent laptop computer.
3. Reconnect the gray bar-code scanner cable to the top of the scanner mechanism.
4. Leave the Autoloader module pulled out far enough to access the three Phillips-head adjustment screws that secure the bar-code scanner assembly to its support bracket on the Autoloader housing. See Figure 4.39-1.
5. Bypass the lower front door switch with a door magnet (or the system cannot boot) and power up the instrument.

Aligning the Bar-Code Scanner

1. After the DMS displays the HmX analyzer picture, initiate the bar-code rate scan test:
   a. Insert the current Service Disk into drive A, and press the **RESET** switch on the DMS, or equivalent, to boot the current Service Disk.
   b. At the A:\> prompt, the following appears:

      Com = 1, baud = 1200, data = 8, parity = o, stop = 1
      Type <Ctrl> Z to abort!
   c. Press Esc. A small arrow (→) and the word *Password* appears.
   d. Using all capital letters, type `HADES` to gain access to the Cap-Piercer Test menu.
   e. At the Cap Piercer Test menu, press M to download the Sample Handler Monitor c196 menu to the DMS.
   f. Press 6 to download the Diagnostics menu.
   g. Press 8 to enter the **Test Barcode Reader** option. The bar-code scanner turns ON.

Figure 4.39-1 Bar-Code Scanner Adjustment Screws

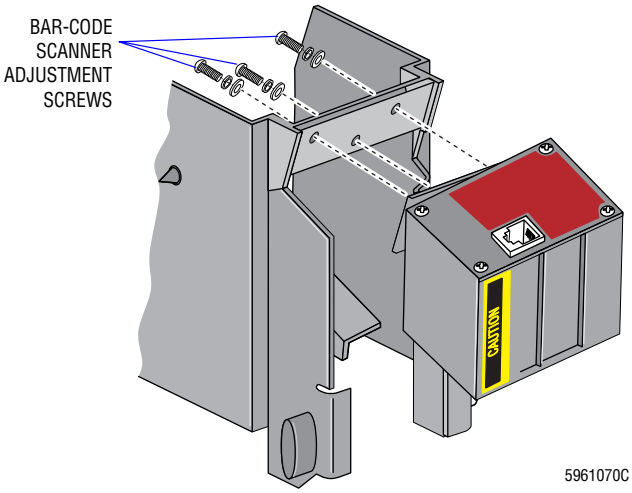

2. Insert five bar-code labelled specimen tubes into a cassette and place the cassette onto the rocker bed on top of the load elevator (elevator in the down position).
3. Using the cassette index mechanism, manually advance the cassette until the specimen tube in position one is at the pierce position, relative to the end of the needle bellows and dead plate on the piercing station.
4. Manually position the rocker bed 22.5 degrees forward, relative to the level and pierce positions. This position is halfway between the horizontal and pierce positions of the rocker bed. (The pierce position is 45 degrees from the horizontal position).
5. Slightly loosen the three Phillips-head adjustment screws that secure the bar-code scanner assembly to its support bracket on the Autoloader housing (shown in Figure 4.39-1), and loosen the small black Phillips-head screw (not shown) that secures the scanner to its left-hand base support bracket.

6. Carefully shift the bar-code scanner assembly in its bracket until the red scanner beam (scan line) is positioned:
   - About in the middle of the gap on the top of the cassette that exposes the bar-code label on the specimen tube.
   - Through the center of the cassette label.
7. View the DMS screen, or equivalent, as the bar-code rate scan test is scrolling.
   - The left- and right-hand percentage (%) columns indicate the capability of the scanner to read both the specimen tube and cassette labels, respectively, at a given position.
   - A 100% indication on the DMS, or equivalent, is perfect and can easily be achieved with the Interleave 2 of 5 specimen tube bar-code labels and Code 128 cassette labels provided by Coulter Corporation.

   Note: Remember that throughout this procedure the rocker bed should be maintained at the 22.5 degree angle as described in step 4 above.
8. When the scan line is configured as described in steps 6 and 7, carefully tighten the three screws loosened in step 5. Ensure that the scan line does not drift away from the middle of the label gap on the cassette.
9. Ensuring the rocker bed remains positioned at 22.5 degrees forward, manually index the cassette to the unload elevator.
   a. Verify that as each tube progresses to the pierce position the scan line is positioned as described in step 6.
   b. Verify that the bar-code read rate displayed on the DMS, or equivalent, is consistent from tube to tube ±10%.
   c. If not, repeat from step 2 until the positioning of the bar-code scanner is acceptable. Otherwise, continue to step 10.
10. At the DMS, or equivalent, press Esc as often as needed to exit the bar-code rate scan test and the HADES or Cap-Piercer Test menus. The messages *backdoor closed* and/or *G'day Mate* appear when the program is successfully exited.
11. If you are using a DMS (not a laptop):
    a. Remove the current Service Disk from drive A.
    b. Using the standby/reset switch, turn the instrument OFF and then back ON.
    c. Allow the instrument to boot the HmX analyzer software.
12. Perform a Start Up as needed by the instrument.
13. Using the Run Samples option of the DMS, cycle a minimum of three cassettes containing bar-code labelled specimen tubes and verify that all bar-code labels are read correctly. If not, repeat from step 2 until the labels are correctly read.

Reassembling the Instrument for Operation

1. Power down the instrument as directed in Power Down/Power Up the System under Heading 4.1, GUIDELINES FOR SERVICING THE HmX ANALYZER.
2. Access and disconnect the Bar-Code Reader Communication cable from the Bar-Code Reader Decoder card and the rear of the DMS, or equivalent.

3. Install and secure the Autoloader module using steps 2 through 9 of the Removal procedure under Heading 4.34, AUTOLOADER MODULE REMOVAL, in reverse order.
4. Remove the bypass magnet and close the doors.
5. Power up the instrument and verify the instrument is working correctly. Go to Verification.

Verification

Verify instrument performance:

1. Do a Start Up or System Test.
2. Check reproducibility as instructed under Heading 4.5, REPRODUCIBILITY CHECKS.
3. Run controls.

4.40 ROCKER BED LINKAGE ADJUSTMENT

General

The adjustable rocker bed linkage converts the rotational motion of the dc rocker motor into the rocking motion of the bed (Figures 4.40-1 and 4.40-2).

Figure 4.40-1 Rocker Bed Linkage

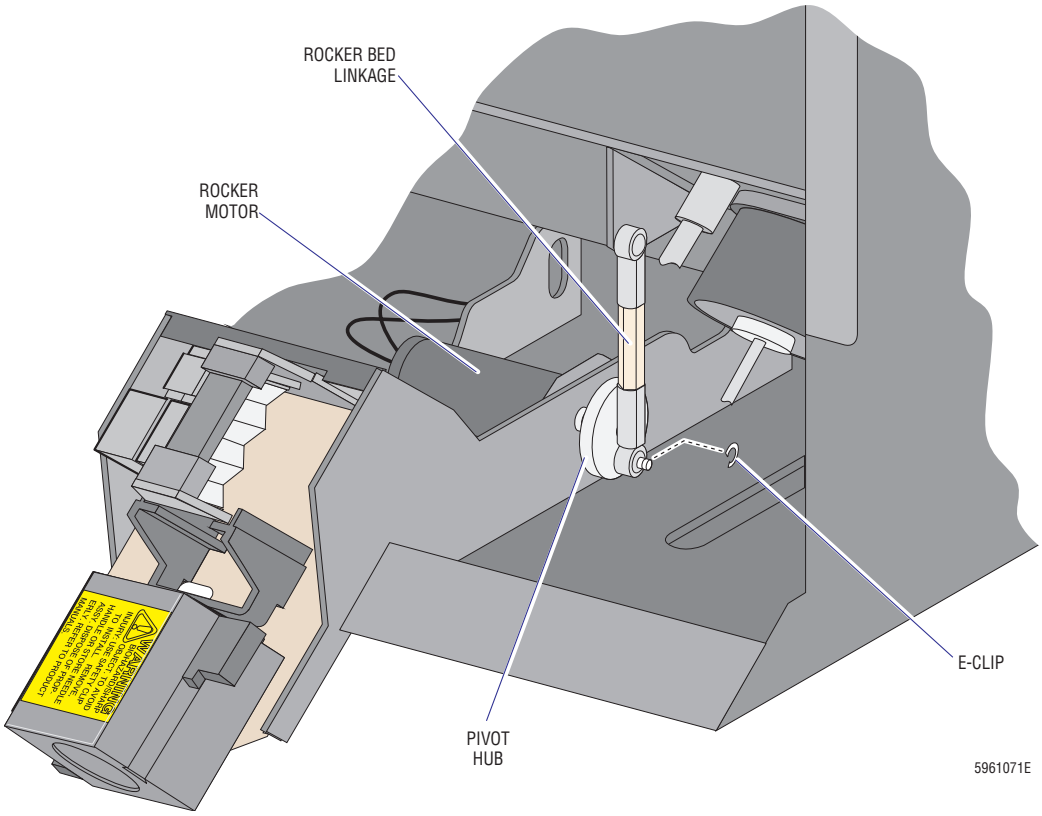

If the link is too long, the bed travels beyond the pierce position (greater than 45 degrees). Under this condition, a tube extending beyond the cassette envelope interferes with the operation of the dead plate and can cause the cassette to lift or walk. In addition, the piercing needle may enter the stopper above its center because the specimen tube is positioned improperly in front of the needle.

If the link is too short, the bed does not rock far enough to the forward position (45 degrees) and may prevent the bed from locking into position. Occasionally, a shorter link allows the bed to jam in the locked position, rendering it difficult to unlock the bed. Also, the piercing needle may enter the stopper below its center because the sample tube is positioned improperly in front of the needle.

An adequately adjusted link must be close to top-dead-center (Figure 4.40-2) when the bed is locked. The allowable bed over-travel is one degree maximum and the under-travel is half a degree maximum.

Figure 4.40-2 Rocker Bed Linkage Adjustment

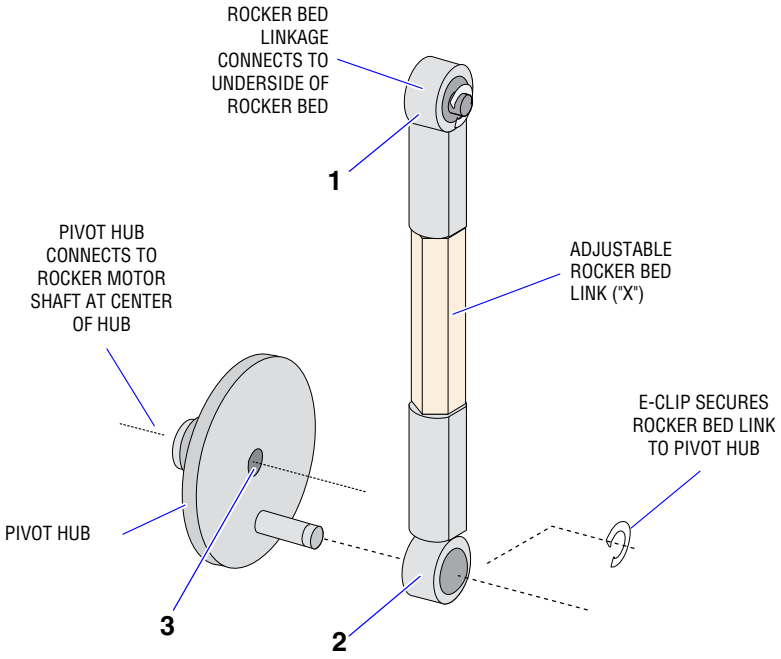

A. IF "X" IS TOO LONG, BED TRAVELS BEYOND THE PIERCE POSITION (45 DEGREES).
B. IF "X" IS TOO SHORT, BED ROCKS LESS THAN 45 DEGREES AND MAY NOT LOCK IN PLACE.
C. IF "X" IS CORRECT, BED LINKAGE IS PERFECTLY ALIGNED WITH POINTS 1, 2, AND 3 (TOP-DEAD-CENTER).

5961072C

Tools/Supplies Needed

- ❑ Ignition pliers
- ❑ Autosensor Test card and cable
- ❑ Small hemostats
- ❑ Service Disk

Procedure

1. Power down the instrument as directed in Power Down/Power Up the System under Heading 4.1, GUIDELINES FOR SERVICING THE HmX ANALYZER.
2. Remove the left-side panel from the Main Unit to access the Sample Handler card. For location of the Sample Handler card, see Figure 2.1-5.
3. Connect the Autosensor Test card:
   a. Disconnect the ribbon cable plugged into J15 on the Sample Handler card.
   b. Plug the P15 connector of the removed ribbon cable (step a) into the large connector on the Autosensor Test card.
   c. Connect the Autosensor Test card accessory cable to connector J15 on the Sample Handler II card to connect the Autosensor Test card in series with the Autoloader Interface and Sample Handler cards.

4. Partially remove the Autoloader module as instructed under Heading 4.34, AUTOLOADER MODULE REMOVAL, to gain access to the solenoids on the left rear of the Autoloader housing.

   Note: It is not necessary to completely remove the Autoloader module or to disconnect the rear cables of the module.

5. Bypass the lower front door switch with a magnet and power up the Main Unit. Allow the system to boot.
6. Manually rock the rocker bed forward until the pierce position (S16) LED on the Autosensor Test card changes state (switches to OFF). Hold the rocker bed in this position.
7. Use the bed lock solenoid, LV84, located on the rear of the Autoloader housing (top solenoid on the left rear).
   a. Press and hold the orange button on LV84 to activate the bed lock cylinder.
   b. Using the hemostats, crimp the green stripe tubing at the bottom of the bed lock cylinder to maintain pressure to the cylinder.
   c. Release the orange button on LV84. The bed should stay locked in position.
8. Examine and adjust, if necessary, the rocker bed linkage for top-dead-center alignment with respect to positions 1, 2, and 3 detailed in Figure 4.40-2.
9. Repeat steps 6 through 8 above as needed to obtain correct adjustment of the rocker bed linkage.
10. Activate the service options as directed under Heading 4.2, USING THE SERVICE DISK.
11. From the Service Options menu, select **Autoloader Tests ▸▸ Autoloader Test Routine**.
12. Place a loaded cassette into the loading bay to initiate the Autoloader Test Routine and monitor the instrument:
    a. Ensure that the rocking, stopping, locking, and unlocking sequences of the rocker bed are smooth.
    b. Ensure that the bed lock does not jam and that extended tubes in the cassette do not interfere with the dead plate.
    c. Ensure that the Autoloader Test Routine is completed with no error codes. If not, troubleshoot as required to resolve the problem and repeat the test.
13. Reassemble the instrument:
    a. Power down the instrument.
    b. Disconnect the Autosensor Test card from the Sample Handler card.
    c. Reconnect the ribbon cable connector, P15, to J15 on the Sample Handler card.
    d. Reinstall and secure the Autoloader module using steps 2 through 9 of the Removal procedure under Heading 4.34, AUTOLOADER MODULE REMOVAL, in reverse order.
    e. Remove the bypass magnet from the lower door switch and close the doors.
14. Power up the instrument and ensure it is working correctly. Go to Verification.

Verification

Verify instrument performance:

1. Do a Start Up or System Test.
2. Check reproducibility as instructed under Heading 4.5, REPRODUCIBILITY CHECKS.
3. Run controls.

4.41 SPECIMEN TUBE STOPPER PIERCE-PROXIMITY ADJUSTMENT

General

The positions of the piercing needle-drive cylinder and tube-ram cylinder, with respect to the position of the rocker bed in the forward position, are major determining factors where specimen-tube stopper is penetrated by the piercing needle. Refer to Figure 4.41-1 detailing the positions of these components.

Figure 4.41-1 Specimen Tube Stopper Piercing Proximity

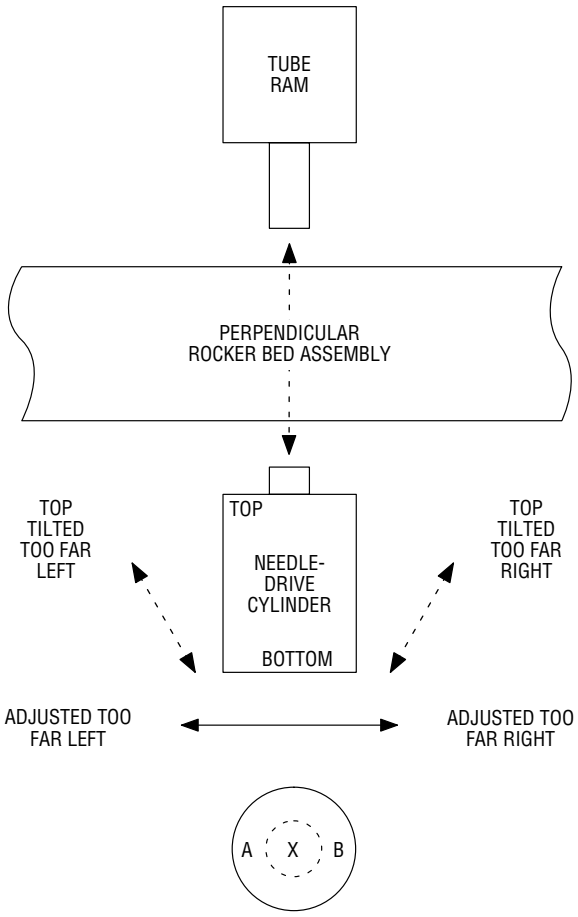

SAMPLE TUBE STOPPER PIERCING PROXIMITY

X = PERFECT CENTER, NEEDLE-DRIVE CYLINDER ADJUSTMENT GOOD.
A = TOO FAR LEFT, NEEDLE-DRIVE CYLINDER TILTED OR ADJUSTED TOO FAR TO LEFT.
B = TOO FAR RIGHT, NEEDLE-DRIVE CYLINDER TILTED OR ADJUSTED TOO FAR TO RIGHT.

5961073C

1. The tube ram and needle-drive cylinder rods are directly across from each other and respectively perpendicular to the fixed rocker bed.
2. The mounting screws for the piercing needle-drive cylinder provide limited adjustment of the relationship described above.
3. Although the mounting screws for the tube-ram cylinder also provide some "play" in its adjustment, the piercing needle-drive cylinder has the greatest effect on specimen-tube pierce proximity.
4. The relationship of the above components affects only the left-to-right (horizontal) specimen-tube stopper pierce proximity, whereas the forward position of the rocker bed affects the up/down (vertical) pierce proximity.
5. The stopper should be pierced in the center ± 0.79 mm (1/32 in.) maximum deviation from the center.

Purpose

This procedure is required if the piercing needle-drive cylinder needs to be removed and/or replaced, or if the unit has been experiencing piercing errors.

Tools/Supplies Needed

- ❑ Phillips-head screwdriver
- ❑ Fresh, unpierced, specimen tubes
- ❑ Service Disk

Preliminary Procedure

1. If replacement of the cylinder is required, prior to removing the existing needle-drive cylinder, mark its position with a marker. (Obtain a footprint of its location).
2. As required, install the new cylinder using the footprint as a reference for positioning.
3. Ensure that the piercing needle is not bent.
4. Proceed with the Horizontal Pierce-Proximity Adjustments and Vertical Pierce-Proximity Adjustments.

Horizontal Pierce-Proximity Adjustments

1. Activate the service options as directed under Heading 4.2, USING THE SERVICE DISK.
2. From the Service Options menu, select **Autoloader Tests ▸▸ Needle Position Test.**
3. Load a cassette with fresh, unpierced specimen tubes and place the cassette into the loading bay. The cassette is processed to the pierce position.
4. Press F2 **Pierce** and observe the piercing location. Refer to Figure 4.41-1 for an example of the correct proximity and details concerning the adjustment decisions.
5. Press F3 **Retract** to retract the needle. The cassette moves to the next position.
6. Make slight adjustments to the position of the needle-drive cylinder as needed.
7. Select **Needle Position Test** and repeat from step 3 as often as needed to obtain the correct horizontal-pierce proximity. The stopper should be pierced in the center of the tube ± 0.79 mm (1/32-in.) deviation on the horizontal axis.

Vertical Pierce-Proximity Adjustments

1. Activate the service options as directed under Heading 4.2, USING THE SERVICE DISK.
2. From the Service Options menu, select **Autoloader Tests ▸▸ Needle Position Test.**
3. Load a cassette with fresh, unpierced specimen tubes and place the cassette into the loading bay. The cassette is processed to the pierce position.
4. Press F2 **Pierce** and observe the piercing location. Refer to Figure 4.41-1 for an example of the correct proximity and details concerning the adjustment decisions.
5. Press F3 **Retract** to retract the needle. The cassette moves to the next position.
6. Repeat steps 4 and 5 for all five tubes.
7. Ensure that each tube is pierced in the center of the tube ± 0.79 mm (1/32-in.) deviation on the vertical axis.

8. If adjustment to the vertical-pierce location is needed:
    a. Loosen the two outer screws that mount the bed-lock cylinder, located on the inside right of the Autoloader housing.
        - Move the bed-lock cylinder toward the back of the unit to lower the pierce-hole location.
        - Move the bed-lock cylinder toward the front of the unit to raise the pierce-hole location.
    b. Tighten the screws while holding the cylinder in position.
9. Repeat from 2 as needed to align the vertical position.
10. Ensure the instrument is working correctly. Go to Verification.

Verification

1. If you adjusted the bed-lock cylinder, check the rocker bed linkage adjustment as directed under Heading 4.40, ROCKER BED LINKAGE ADJUSTMENT.
2. If you did not adjust the bed-lock cylinder, verify instrument performance:
    a. Do a Start Up or System Test.
    b. Check reproducibility as instructed under Heading 4.5, REPRODUCIBILITY CHECKS.
    c. Run controls.

4.42 CASSETTE INDEX MOTOR/INDEX HUB GAP ADJUSTMENT

Purpose

This adjustment is required if either the cassette index motor or index hub has been replaced.

Tools/Supplies Needed

- ❑ Gap Adjustment Tool, PN 1021986
- ❑ Set of Allen wrenches

Procedure

1. Loosen the two Allen screws that secure the index hub onto the motor shaft. See Figure 4.42-1.

Figure 4.42-1 Index Motor/Index Hub Gap Adjustment

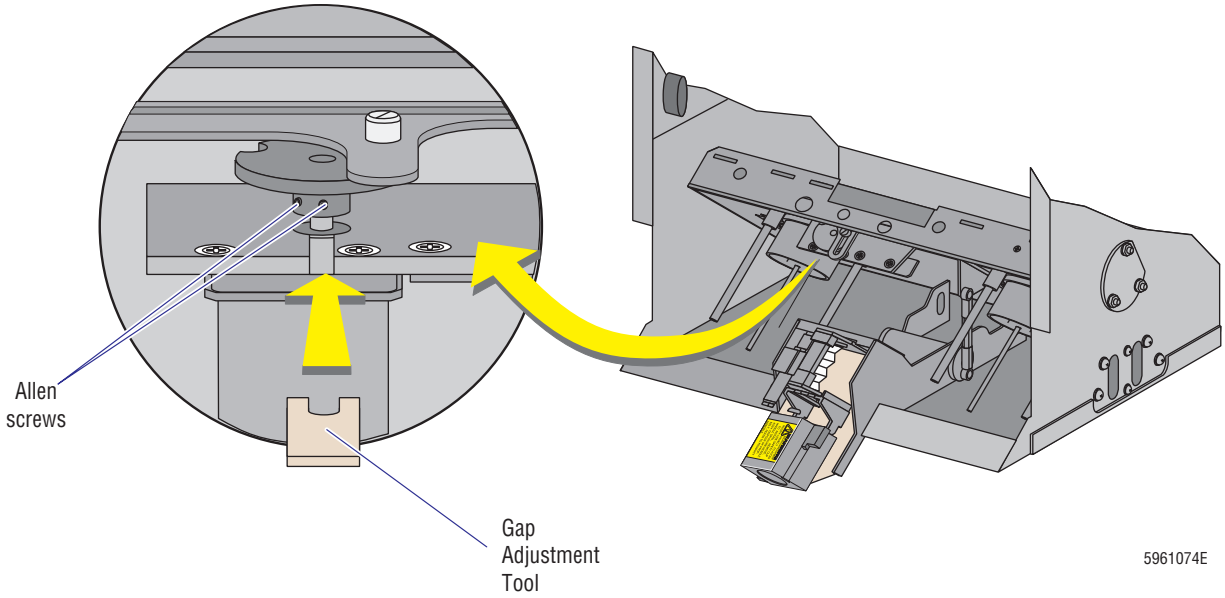

2. Insert the 0.318 cm (0.125 in.) Gap Adjustment Tool between the cassette index motor and the index hub, as shown in Figure 4.42-1, to set the distance between the index motor and index hub.
3. When the correct distance is set, tighten the Allen screws.
4. Ensure the instrument is working correctly. Go to Verification.

Verification

Verify instrument performance:

1. Do a Start Up or System Test.
2. Check reproducibility as instructed under Heading 4.5, REPRODUCIBILITY CHECKS.
3. Run controls.

4.43 SWITCH/SENSOR CHECK

Tools/Supplies Needed

- ❑ Service Disk

Purpose

Use this procedure to verify a switch or sensor is working correctly.

Procedure

1. Activate the service options as directed under Table 4.2, USING THE SERVICE DISK.
2. From the Service Options menu, select **Switch/Sensor Check**.
3. Press F5 **Run** to display the states of the switches and sensors.
4. Activate the desired switch (or sensor) as directed in Table 4.43-1, Switch/Sensor Checks on the HmX Analyzer with Autoloader Module, or Table 4.43-2, Switch/Sensor Checks on the HmX Analyzer with Rotary Cap-Pierce Module.
5. Verify the display for that switch (or sensor) changes from 0 to 1, or 1 to 0.
6. If a switch (or sensor) does not change states correctly, fix the problem and repeat this procedure.

Table 4.43-1 Switch/Sensor Checks on the HmX Analyzer with Autoloader Module

Switch or Sensor/ Location Reference	Type	Function	Idle State	Action to Change State
Whole Blood, S2-whole blood			0	Press the sample bar.
Backwash Safety, S3-backwash			0	Manually move the rinse block down to the end of travel.
Rinse Block Arm, S4			1	Manually move rinse block assembly from the home position.
Diluent, FD6 See Figure A.5-6	Optical	Senses when the diluent container is empty.	1	Remove diluent from the optical chamber.
Cleaner, FD7 See Figure A.5-6	Optical	Senses when the cleaning agent container is empty.	1	Remove cleaning agent from the optical chamber.
Waste	Float	Senses when the waste container is full.	1	**WARNING** Biohazardous contamination could occur from contact with the waste container and its associated tubing if not handled with care. Wear protective gear. Avoid skin contact. Clean up spills immediately. Manually move the float sensor.

Table 4.43-1 Switch/Sensor Checks on the HmX Analyzer with Autoloader Module *(Continued)*

Switch or Sensor/ Location Reference	Type	Function	Idle State	Action to Change State
Sheath Tank,S5-tank	Float	Senses when the sheath tank is empty.	0	Manually drain the sheath tank, allowing the float sensor to drop to its lower end of travel.
CBC Lyse, FD5 See Figure A.5-6	Optical	Senses when the CBC lytic reagent container is empty.	0	Remove CBC lytic reagent from the optical chamber.
Erythrolyse, FD3 See Figure A.5-6	Optical	Senses when the Erythrolyse II (PAK LYSE) reagent container is empty.	0	Remove Erythrolyse II reagent from the optical chamber.
Stabilyse, FD4 See Figure A.5-6	Optical	Senses when the StabiLyse (PAK PRESERVE) reagent container is empty.	0	Remove StabiLyse reagent from the optical chamber.
Door Interlock, S5 See Figure 2.9-1	Magnetic	Senses the front door is opened/closed	1	Open the front door or manually activate the sensor with an external magnet.
STOP Switch, S4	Switch	Stops instrument after current cycle.	1	Press the **STOP** button.
Load Stack Empty, S15 See Figure 2.9-1, Figure 2.9-2	Optical	Senses the loading bay is empty.	0	Press the sensor actuator; it is located in the lower rear of the loading bay.
Unload Stack Full, S11 See Figure 2.9-1, Figure 2.9-2	Optical	Senses the unloading bay is full - five cassettes are present.	0	Press the sensor actuator; it is located in the upper right of the unloading bay.
Needle Home, S0 See Figure 2.9-1, on CL6 (Hall effect) or Figure 2.9-2, at Piercing station (optical).	Hall effect or Optical	Senses the needle is fully retracted to the home position.	0	**WARNING** Biohazardous contamination could occur from contact with the needle and its associated tubing if not handled with care. Wear protective gear and avoid skin contact. Disconnect the tubing from CL6 and manually move the needle from the home position.
Needle Forward, S1 See Figure 2.9-1, on CL6 (Hall effect) or Figure 2.9-2, at Piercing station (optical).	Hall effect or Optical	Senses the needle is forward in the piercing position.	1	**WARNING** Biohazardous contamination could occur from contact with the needle and its associated tubing if not handled with care. Wear protective gear and avoid skin contact. Disconnect the tubing from CL6 and manually move the needle to the fully forward position.

Table 4.43-1 Switch/Sensor Checks on the HmX Analyzer with Autoloader Module *(Continued)*

Switch or Sensor/ Location Reference	Type	Function	Idle State	Action to Change State
Tube Ram, S10 See Figure 2.9-3	Hall effect	Senses the tube ram cylinder is fully retracted to the home position.	1	Manually move the tube ram from the home position.
Tube Forward, S14 See Figure 2.9-2	Optical	Senses a specimen tube is present and pushed against the stop (dead plate) in the Piercing station, ready for piercing.	1	**WARNING** Biohazardous contamination could occur from contact with the needle and its associated tubing if not handled with care. Wear protective gear and avoid skin contact. 1. Attach the safety clip to the needle cartridge and remove the cartridge. 2. Manually push on the dead plate.
Tube Available, S7 See Figure 2.9-1	Optical	Senses the presence of a specimen tube in the cassette at the piercing station.	0	Press the sensor actuator; it is located in the center of the rocker bed.
Load Elevator Down, S8 See Figure 2.9-1	Optical	Senses when the right elevator platform is all the way down.	0	Manually rotate the rocker bed to the rear position, then carefully raise the load elevator by gently pushing the mechanism.
Unload Elevator Down, S6 See Figure 2.9-1	Optical	Senses when the left elevator platform is all the way down.	0	Manually rotate the rocker bed to the rear position, then carefully raise the unload elevator by gently pushing the mechanism.
Full Cass Index Rotation, S9 See Figure 2.9-1	Optical	Senses when the cassette advance mechanism is inactive. This sensor becomes not true when the cassette indexing mechanism is advancing the cassette.	1	Manually rotate the rocker bed to the rear position, then carefully rotate the cassette index mechanism.
Pierce Position, S16 See Figure 2.9-2	Optical	Senses when the rocker bed is in the forward, piercing position.	0	Manually rotate the rocker bed to the front (pierce) position.
Horizontal Position, S17 See Figure 2.9-2	Optical	Senses when the rocker bed is in the level, cassette loading and unloading position.	1	Manually rotate the rocker bed from front to rear. The sensor should go "high" when the rocker bed is in the horizontal position.

Table 4.43-1 Switch/Sensor Checks on the HmX Analyzer with Autoloader Module *(Continued)*

Switch or Sensor/ Location Reference	Type	Function	Idle State	Action to Change State
Cassette position 0, S12 See Figure 2.9-1	Optical	Senses a cassette is placed on the rocker bed and is oriented correctly, cassette position 0.	0	Manually activate the sensor actuator; it is located on the rear edge of the rocker bed, the first sensor actuator in from the right.
Cassette Position 1, S2 See Figure 2.9-1	Optical	Senses a cassette has advanced the first time, cassette position 1.	0	Manually activate the sensor actuator; it is located on the rear edge of the rocker bed, the second sensor actuator in from the right.
Cassette Position 2, S3 See Figure 2.9-1	Optical	Senses that a cassette is overlapping the elevator platform, cassette position 2.	0	Manually activate the sensor actuator; it is located on the rear edge of the rocker bed, the third sensor actuator in from the right.
Cassette Position 3, S13 See Figure 2.9-1	Optical	Senses that a cassette is over the elevator platform, cassette position 3.	0	Manually activate the sensor actuator; it is located on the rear edge of the rocker bed, the fourth sensor actuator in from the right (or the first one in from the left).

Table 4.43-2 Switch/Sensor Checks on the HmX Analyzer with Rotary Cap-Pierce Module

Switch or Sensor/ Location Reference	Type	Function	Idle State	Action to Change State
Whole Blood, S2-whole blood			0	Press the sample bar.
Backwash Safety, S3-backwash			0	Manually move the rinse block down to the end of travel.
Rinse Block Arm, S4			1	Manually move rinse block assembly from the home position.
Diluent, FD6 See Figure A.5-6	Optical	Senses when the diluent container is empty.	1	Remove diluent from the optical chamber.
Cleaner, FD7 See Figure A.5-6	Optical	Senses when the cleaning agent container is empty.	1	Remove cleaning agent from the optical chamber.
Waste	Float	Senses when the waste container is full.	1	**WARNING** Biohazardous contamination could occur from contact with the waste container and its associated tubing if not handled with care. Wear protective gear. Avoid skin contact. Clean up spills immediately. Manually move the float sensor.
Sheath Tank, S5-tank	Float	Senses when the sheath tank is empty.	1	Manually drain the sheath tank, allowing the float sensor to drop to its lower end of travel.
Needle Home, U1 See Figure 2.8-1, next to the needle assembly (optical) or on CL5 (Hall effect).	Optical or Hall effect	Senses the needle is fully retracted to the home position.	0	**WARNING** Biohazardous contamination could occur from contact with the needle assembly if not handled with care. Wear protective gear and avoid skin contact. Disconnect the tubing from CL5 and manually move the needle assembly from the home position.
Needle Forward, U2 See Figure 2.8-1, next to the needle assembly (optical) or on CL5 (Hall effect).	Optical or Hall effect	Senses when the needle is extended.	1	**WARNING** Biohazardous contamination could occur from contact with the needle assembly if not handled with care. Wear protective gear and avoid skin contact. Disconnect the tubing from CL5 and manually move the needle assembly to the fully forward position.

Table 4.43-2 Switch/Sensor Checks on the HmX Analyzer with Rotary Cap-Pierce Module *(Continued)*

Switch or Sensor/ Location Reference	Type	Function	Idle State	Action to Change State
Normal Position, U3 See Figure 2.8-1	Optical	Senses a normal sized specimen tube is in the pierce position.	1	**WARNING** Biohazardous contamination could occur from contact with the carousel assembly if not handled with care. Wear protective gear and avoid skin contact. Manually rotate the carousel from the normal size position.
Oversized Pos., U4 See Figure 2.8-1	Optical	Senses an oversized specimen tube is in the pierce position.	0	**WARNING** Biohazardous contamination could occur from contact with the carousel assembly if not handled with care. Wear protective gear and avoid skin contact. Manually rotate the carousel to the oversize position.
Hand Detector, DS1, Q2 (LEDs) See Figure 2.8-1	Infrared	This two-part sensor, DS1 transmit (on the right) and Q2 receive (on the left), senses when a tube is placed in the carousel and checks for objects blocking the carousel rotation path before the carousel is rotated.	0	Manually block the light path between the hand detector transmitter and receiver (the lower pair of LED sensors mounted on the carousel bracket).
Door Interlock, S18	Magnetic	Senses the front door is opened/closed.	1	Open the front door or manually activate the sensor with an external magnet.
Barcode Detector, DS2, Q1 (LEDs) See Figure 2.8-1	Infrared	This two part sensor, DS2 transmit (on the left) and Q2 receive (on the right), senses the presence of a tube and activates the bar-code laser scanner.	0	Manually block the light path between the bar-code detector transmitter and receiver (the upper pair of LED sensors mounted on the carousel bracket).
Tube Available, U5 See Figure 2.8-1	Infrared	Detects when a specimen tube is in one of the tube slots of the carousel.	0	Manually activate the tube sensor pivot arm assembly.

4.44 NEEDLE-POSITION SENSORS ADJUSTMENT

Purpose

Use this procedure to adjust the Hall effect needle-position sensors (needle-home or needle-forward) on a Rotary Cap-Pierce module or an Autoloader module whenever you replace:

- A needle-drive cylinder, CL5 (Rotary Cap-Pierce module) or CL6 (Autoloader module).
- A needle-home sensor, U1 (Rotary Cap-Pierce module) or S0 (Autoloader module).
- A needle-forward sensor, U2 (Rotary Cap-Pierce module) or S1 (Autoloader module).

Preliminary Check

ATTENTION: To make the description of the sensor to cylinder orientation universal, it is based on the example shown in Figure 4.44-1.

Figure 4.44-1 Needle-Position Sensor Orientation on the Needle Drive Cylinder

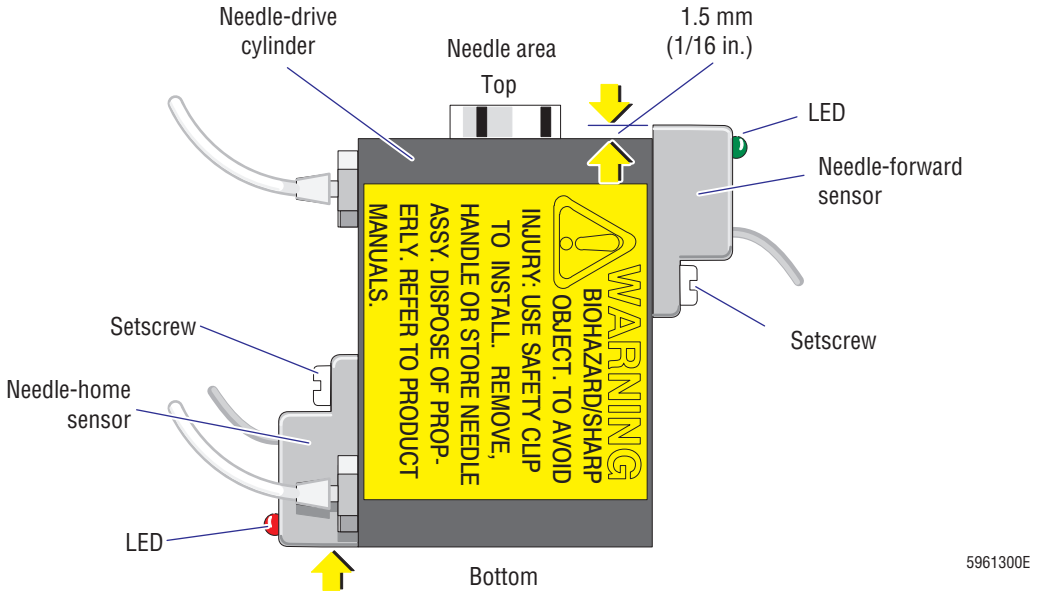

1. Using Figure 4.44-1 as a reference, check the location and orientation of both needle-position sensors on the needle-drive cylinder.
   a. Verify that the needle-home sensor (U1 or S0) is mounted on the left side of the cylinder (below the pressure tubing), that its LED faces away from the needle area, and that the LED end of the sensor is flush with the bottom of the cylinder.
   b. Verify that the needle-forward sensor (U2 or S1) is mounted on the right side of the cylinder, that its LED faces toward the needle area, and that the LED end of the sensor extends about 1.5 mm (1/16 in.) past the top of the cylinder.

CAUTION Overtightening the setscrew on a Hall effect sensor can damage the setscrew if the setscrew is plastic, or damage the needle-drive cylinder if the setscrew is metal. Do not overtighten the setscrew on a Hall effect sensor.

WARNING Risk of personal injury or contamination. The needle is very sharp and can contain biohazardous material. To avoid skin puncture, use care when working in the Piercing station.

2. If a needle-position sensor is not positioned correctly on the needle-drive cylinder:
   a. Power down the instrument as directed in Power Down/Power Up the System under Heading 4.1, GUIDELINES FOR SERVICING THE HmX ANALYZER.
   b. Loosen the setscrew for the sensor (Figure 4.44-1).
   c. Reposition the sensor.
   d. Tighten the setscrew to hold the sensor in place, but do not overtighten it.
   e. Power up the instrument.

Adjustment

1. Check the position of the needle-home sensor:
   a. Verify the needle is fully retracted.
   b. With the needle fully retracted, verify the needle-home sensor's LED is lit.
   c. If the LED is not lit:
      1) Loosen the setscrew for the needle-home sensor (Figure 4.44-1).
      2) Move the sensor until the LED lights.
      3) Tighten the setscrew to hold the sensor in place, but do not overtighten it.
2. On instruments with a Rotary Cap-Pierce module, check the position of the needle-forward sensor as follows:
   a. Remove the pressure tubing from the top fitting on the cylinder.
   b. Rotate the carousel to the piercing position.
   c. Manually push the needle cartridge driver to fully extend the needle.
   d. With the needle fully extended, verify the needle-forward sensors's LED is lit.
   e. If the LED is not lit:
      1) Loosen the setscrew for the needle-forward sensor (Figure 4.44-1).
      2) Move the sensor until the LED lights.
      3) Tighten the setscrew to hold the sensor in place, but do not overtighten it.
   f. Push the needle back to the home position and reconnect the tubing to the needle-drive cylinder.
3. On instruments with an Autoloader module, check the position of the needle-forward sensor as follows:
   a. Remove the pressure tubing from the top fitting on the cylinder.
   b. Move the rocker bed to the forward position.
   c. Manually push the needle cartridge driver to fully extend the needle.

d. With the needle fully extended, verify the needle forward-sensor's LED is lit.

e. If the LED is not lit:

   1) Loosen the setscrew for the needle forward sensor (Figure 4.44-1).

   2) Move the sensor until the LED lights.

   3) Tighten the setscrew to hold the sensor in place, but do not overtighten it.

f. Push the needle back to the home position and reconnect the tubing to the needle-drive cylinder.

Verification

Verify instrument performance:

1. Do a Start Up cycle and verify all startup results Pass.
2. Check reproducibility in the Primary mode as directed under Heading 4.5, REPRODUCIBILITY CHECKS.
3. Verify no needle-position errors were posted when cycling in the Primary mode.
4. Run controls and verify that the results fall within the expected range.

5 MAINTENANCE PROCEDURES, 5.1-1

5.1 MAINTENANCE AND SYSTEM VERIFICATION RECOMMENDATIONS, 5.1-1
Required Service Forms, 5.1-1
Maintenance Schedule, 5.1-1
Verifying Instrument Performance, 5.1-1
Purpose, 5.1-1
Tools/Supplies Needed, 5.1-1
Procedure, 5.1-1
Recording Reference Voltages, 5.1-1

CONTENTS

5.1 MAINTENANCE AND SYSTEM VERIFICATION RECOMMENDATIONS

Required Service Forms

A copy of the following forms is included at the end of this chapter for your convenience. Make copies as needed.

- COULTER® SYSTEM VERIFICATION FORM, PN 4276605
- COULTER® HmX Analyzer Reference Form, PN 4276862
- HmX ANALYZER RECOMMENDED MAINTENANCE SCHEDULE, PN 4276863

Maintenance Schedule

The recommended schedule for component replacement is outlined in the HmX ANALYZER RECOMMENDED MAINTENANCE SCHEDULE, PN 4276863.

Verifying Instrument Performance

Purpose

Doing the System Verification Procedure (SVP) at the end of a service call ensures the instrument is working correctly before you leave.

Tools/Supplies Needed

IMPORTANT Blood samples must be fresh, unrefrigerated, human blood obtained from normal donors and drawn into EDTA tubes within the previous 4 hours.

- ❑ Whole blood
- ❑ COULTER® SYSTEM VERIFICATION FORM, PN 4276605

Procedure

Do the SVP and complete the SVP form at each service call. The minimum verification requirements for any type of service performed on the HmX analyzer is to do a startup, run a reproducibility in the mode or modes used by the customer, and run controls.

On the back of the SVP form is a check list of all the procedures outlined in the HmX Analyzer Service Manual. Space is also provided on the back of the SVP form to record procedures not on the check list.

Provide a completed copy of the SVP form to the customer for future reference.

Recording Reference Voltages

If the procedures you performed during a service call affected the reference voltages, you must also fill in a copy of the COULTER® HmX Instrument Reference Form, PN 4276862, and leave it with the customer.

COULTER® HEMATOLOGY SYSTEM VERIFICATION FORM

Institution Name _____ Date _____

Address _____ Cycle Count _____

Model / Serial # _____ Tracking # _____

Problem / Symptom

Corrective Action

SM's, (Service Mod's) **Performed**

On all types of maintenance completed, Perform:

ALL MODELS

☐	Background Test Passed	Verify against performance specification*
☐	Reproducibility Run Passed	Verify against performance specification*
☐	Control Run Passed	Verify against performance specification*

STKS™ Analyzer & MAXM™ Analyzer ONLY

☐	BSV and BSV Housing Verification performed	‡

MAXM™ Analyzer ONLY

☐	30 & 60 psi checks performed	‡

Additional comments

Customer Signature _____

Performed by _____

* Reference the Operators Manual for the appropriate instrument to obtain the correct Performance Specification.

‡ Reference the Service Manual for the appropriate instrument to obtain the Procedure.

4276605 Rev. A

Checked Box Indicates Function Performed PROCEDURE / VERIFICATION	STKS™ Analyzer	STKR Analyzer	MAXM™ Analyzer	S+ Analyzer Series	VCS Analyzer	MD / MD II Analyzer	ONYX Analyzer	JT / Jr. Analyzer	T Analyzer Series	JS/JT 2 & 3 Analyzer	HmX Analyzer	AcT Analyzer Series	Act Diff 2™ Analyzer
PERFORMANCE													
Startup Tests													
Background Count													
CBC - CBC / Diff Reproducibility													
Retic Reproducibility		■		■	■	■	■	■	■	■		■	■
Carryover CBC - CBC/Diff												■	■
Retic Mode to Mode & Within Mode Carryover		■		■	■	■	■	■	■	■		■	■
Mode to Mode Matching					■	■		■	■			■	
Verified Control Recovery													
ANALYZER / DILUTER													
Electronic Reference Tests												■	■
Analog Pulse Test		■	■	■	■	■	■	■	■	■	■	■	■
Replaced / Cleaned / Verified BSV / MPCV						■						■	■
Replaced Pinch Valve / Actuator						■	■					■	
Replaced Tubing													
Replaced / Verified Peristaltic Pump Tubing	■	■	■	■	■		■	■	■	■	■		
Replaced Cylinder						■						■	■
Replaced / Verified Switch / Sensor													
Resistance Test (ground loop test)		■	■	■	■	■	■	■	■	■	■	■	■
Replaced / Verified Solenoid operation													
Replaced / Verified Bar Code Reader					■	■			■			■	■
Blood Detector adjustment / Verification					■	■		■	■			■	■
Diluent Lytic reagent dispense timing						■						■	■
Elevator removal/replacement				■	■	■		■	■	■		■	■
Hemoglobin lamp adjustment/replacement													
Manual aspiration rinse trough/probe adj.						■	■					■	■
Replaced / Cleaned Filter													
Replaced / Verified Lamp / Indicator						■						■	
Replaced / Cleaned Bath(s)													
Replaced / Cleaned / Verified Aperture(s)													
Replaced / Adjusted / Verified Reagent Sensor													
Replaced Sample / Diluent Syringe	■	■	■	■	■		■	■	■	■	■		
PRINTERS													
Verified graphics printer operation													
Verified ticket printer operation													
COMPUTER / DATA TERMINAL / DISPLAY / CPU CARD													
Verified Configuration / Initialization						■						■	■
Replaced / Formatted / Partitioned Hard Drive		■		■		■		■	■	■		■	■
Installed Software													
Verified / Modified CMOS Setup						■		■	■	■		■	■
Checked for Viruses		■		■		■		■	■	■		■	■
Replaced / Cleaned Floppy Disk Drive		■		■				■	■	■		■	■
Replaced / Cleaned / Verified Keyboard						■		■	■			■	■
Replaced/Cleaned/Verified Keypad/Touchscreen							■						
Replaced / Cleaned Filters						■						■	■
Cleaned Monitor Screen / Display						■						■	■
Other													

PROCEDURE / VERIFICATION	STKS™ Analyzer	STKR Analyzer	MAXM™ Analyzer	S+ Analyzer Series	VCS Analyzer	MD / MD II Analyzer	ONYX Analyzer	JT / Jr.Analyzer	T AnalyzerSeries	JS / JT 2 & 3 Analyzer	HmX Analyzer	AcT Analyzer Series	Act Diff 2™ Analyzer
CALIBRATION													
CBC Latex Calibration					■	■	■	■	■	■		■	■
Aperture Balancing					■	■	■	■	■	■		■	■
Flow Rate Matching			■		■	■	■	■	■	■	■	■	■
Diff Latex Calibration, (Latron)		■		■		■	■	■	■	■		■	■
Initial Adjustment to Control													
Adjusted/Verified Clog Detection Factors	■	■	■	■	■		■	■	■	■	■		
TTM													
Verified Diff / Retic Voltages and Noise Limits		■		■		■	■	■	■	■		■	■
Flow Cell Cleaning Procedure		■		■		■	■	■	■	■		■	■
Lens Block Disassembly / Cleaning		■		■		■	■	■	■	■		■	■
TTM Alignment Procedure		■		■		■	■	■	■	■		■	■
VCS Flow Rate Adjustment		■		■		■	■	■	■	■		■	■
Clog Detector Circuit Adjustment		■		■		■	■	■	■	■		■	■
VCS Optimization Procedure		■		■		■	■	■	■	■		■	■
PUMP VOLUME ADJUSTMENT / VERIFICATION													
CBC Lytic reagent												■	■
Erythrolyse / Stabilyse		■		■		■	■	■	■	■		■	■
RBC Diluent						■						■	■
WBC Diluent						■						■	■
Primary Aspiration						■						■	■
Secondary Aspiration						■		■	■			■	■
Checked Syringe Seals	■	■	■	■	■		■	■	■	■	■		■
Performed Pump Correction Factor Procedure	■	■	■	■	■	■	■	■	■	■	■	■	
ELECTRONIC / PNEUMATIC SUPPLY													
Checked Supply Voltages													
Checked Supply Pressures						■						■	■
Checked Supply Vacuum													
Replaced / Cleaned Filters						■						■	■
Cleaned Vacuum / Foam Trap						■	■					■	
Cleaned/Serviced Air / Water Separator / Purge Sol.						■	■					■	■
AUTOMATIC SAMPLE HANDLING SYSTEM													
Replaced/Verified/ Switch/Sensor and Alignment					■	■		■	■			■	
Performed Bar-Code Scanner Alignment					■	■		■	■			■	■
Performed Rocker Bed Linkage Adjustment	■	■		■	■	■		■	■	■		■	■
Sample tube stopper pierce-proximity/centering adj.	■	■		■	■	■		■	■			■	
Adjusted cassette index motor/index hub gap	■	■		■	■	■		■	■	■		■	■
Tube detector replacement/adjustment & verification			■	■	■	■		■	■		■	■	
Air cylinder replacement / verification					■	■		■	■			■	■
Rockerbed belt tension adjustment			■	■	■	■	■	■	■	■	■	■	■
CTPSA Verification Procedure			■	■	■	■	■	■	■	■	■	■	■
Replaced / Inspected tubing					■	■		■	■			■	■
Replaced / Inspected pinch valve-(s)					■	■	■	■	■			■	
Cleaned / replaced needle	■	■			■	■		■	■			■	
Replaced / Inspected needle bellows/Rinse trough/block	■	■			■	■		■	■			■	■
Other													
Other													

COULTER® HmX Analyzer Reference Form

1. AC Line Input Voltage _____

2. System Test

Affix (Staple) System Test printout to this document.

3. Calibration Factors

	Primary Mode		Secondary Mode
WBC	_____	WBC	_____
RBC	_____	RBC	_____
HGB	_____	HGB	_____
MCV	_____	MCV	_____
PLT	_____	PLT	_____
MPV	_____	MPV	_____

4. RMS Noise and Light Scatter Offset Voltages

CBC RMS Noise
Static

WBC	_____
PLT	_____
RBC	_____

	Diff RMS Noise		Retic RMS Noise	
	Static	Dynamic	Static	Dynamic
V	_____	_____	_____	_____
C	_____	_____	_____	_____
S	_____	_____	_____	_____

Light Scatter Offset _____ Light Scatter Offset _____

DMS Software Revision: _____

Date:_____Model Code:_____Serial Number:_____

COULTER® HmX Analyzer Recommended Maintenance Schedule

This schedule for component replacement is recommended only and may vary with instrument usage and environment.

Every 12 Months, Every 20,000 Cycles or as Needed

- √ Replace Aperture O-Rings
- √ Replace the lower sheath restrictor
- √ Replace the 6" sample line from flow cell to mixing chamber
- √ Replace the mixing chamber
- √ Replace the Quench line to the mixing chamber
- √ Replace all pinch tubing
- √ Replace the aspiration tubing from needle to blood detector
- √ Replace the 4.5" rinse line from peltier to BSV wm-6
- √ Replace the 4.0" rinse line from peltier to mixing chamber
- √ Replace the 11.0" Sample line from BSV to mixing chamber
- √ Replace the CBC lytic reagent restrictor tubing.

Every 36 Months or as Needed

- √ Replace waste and drain tubing
- √ Replace diluent and cleaner tubing
- √ Replace lytic reagent tubing

6 SCHEMATICS, 6.1-1

6.1 ENGINEERING SCHEMATICS, 6.1-1
Schematics Included, 6.1-1
Schematics Not Included but Available, 6.1-1

TABLES

6.1-1 Schematics Included in This Manual, 6.1-1
6.1-2 Schematics Available for the HmX Analyzer but Not Included in This Manual, 6.1-1

CONTENTS

6.1 ENGINEERING SCHEMATICS

This chapter contains the pneumatic/hydraulic and electronic schematics you need for troubleshooting the HmX analyzer. The schematic revision levels were current on the date this revision of the manual was released. They will be updated again to the latest revision level whenever this manual is revised.

Because the engineering schematics are simply inserted into the document and are not assigned page numbers or figure numbers, they are not included in the table of contents or index. In the text they are referenced by their name and document control number (DCN).

Schematics Included

Table 6.1-1 lists the schematics included in this manual, in the order in which they appear in the printed manual. In the online manual the DCN numbers in Table 6.1-1 are linked to the schematics.

Table 6.1-1 Schematics Included in This Manual

Name	DCN
Pneu/Hydr Layout	6320510
Interconnect Diagram MAXM/HmX Systems	6320619
Pneumatic Power Supply, 100/120 Vac	6320683
Pneumatic Power Supply, 220/240 Vac	6320682
Power Supply Module 100/120 Vac	6320500
Power Supply Module 220/240 Vac	6320750

Schematics Not Included but Available

The schematics listed in Table 6.1-2 are not included in this manual, but they are available and may be useful for in-depth troubleshooting of the HmX analyzer.

Table 6.1-2 Schematics Available for the HmX Analyzer but Not Included in This Manual

Name	DCN
Laser Assembly, 100/120 V	6320611
Laser Assembly, 220/240 V	6320612
Backplane DIN96	6320400
Sample Handler 2	6320895
Red/Wht Preamp +	6320414
376CPU	6320390
R/W/P Processor	6320364
Pneumatic Monitors	6320402
I/O	6320371
Diluter Interface	6320383
VCS Processor	6320499
FL Det/RAM Press	6321202

Table 6.1-2 Schematics Available for the HmX Analyzer but Not Included in This Manual *(Continued)*

Name	DCN
Aperture, Voltage/Power Fail Detector	6320453
Peltier Temp Control	6320413
Autoloader Housing Interface Card	6320759
Autoloader Rocker Bed Interface Card	6320760

PART/ DWG NO. 6320510 | REV Z | SH 1

COMPONENT REFERENCE DESIGNATIONS

LAST USED	NOT USED
QD22M,F	4
PV70	9,16-19,29
CK60	5-8,11,12-29,31,34, 36-38,41-49,51-58
FF242	46-49,54-61,76-79, 170,190-200,237
FY115	20,26-30, 39-57,89-94,102,114
FU40	5,6,10,12-22, 25-29,34-39-200
FT53	8-10,23-27, 34,36,47-49
CV79	6,9-16,20,21 35-39,42
FR61	3-34,36-57
VC12	———
PM12	———
MF17	9,13,12
SF1	———
BT2	———
ST1	———
RB1	———
BSV1	———
BD2	———
CL9	CL2
PN1	———
MC1	———
FL3	———
FMT4	———
RG5	———
FC1	———
PLB1	———
FD7	———

SOLENOIDS

01	CBCWASTEPRESS	PV4
02	RBCCOUNT	PV2,PV66,PV67,PV68,PV69
03	BATHDRAIN	PV5,PV6
04	CBCLYSE	PV1,PV7
05	WBCCOUNT	PV3
06	BLEACHBATH	PV8
07	WBCMIX	——
08	RBCMIX	——
09	CYCLE COUNTER	——
10	CLEANER SENSOR	PV62
11	DILUENT SENSOR	PV63
12	CBCLYSE SENSOR	PV64
13	PAKSENSOR	PV61,PV65
14	AIRPUMP	PV12,PV13
15	BUBBLEMAKE	PV14
16	PROBEROTATE	CL1
17	PROBERETURN	CL1
18	RETURNVALVE	CL2
19	SEGMENT	CL2
20	PROBECLEAN	PV42,CL3
21	SECONDASP	PV10
22	PREPREPASP	PV11
23	CLAMPTUBE	CL4
24	PIERCENEEDLE	CL5
25	ASPPIERCER	PV23,PV24
26	ASPPROBE	PV25,PV26
27	ERYTHROLYSE	PV27
28	NEEDLERINSE	PV22
29	BELLOWSDRAIN	PV21
30	NEEDLEAIRDRY	PV20
31	PREPREPMC	PV59
32	RINSEMC	PV52
33	DRAINMC	PV57
34	ERYTHROLYSEDISABLE	PV51
35	WBCRBCDISP	PV30
36	CBCHIVAC	PV31
37	BLEACHASP	PV32
38	BLEACHMC	PV33
39	BLEACHISO	PV34
40	PROBEVAC	PV35
41	BSVCLEAN	PV36
42	DETERGENT	PV37
43	DIFFWASTEPRESS	PV38
44	ERYTHROLYSE1	PV28
45	DIFFWASTEVAC	PV40
46	BACKWASH	PV49
47	CBCWASTEDRAIN	PV43,PV39
48	CLEANER	PV48
49	SAMPLEPRESS	PV41
50	FLUSHUPPER	PV44
51	RUN	PV45
52	EXITSAMPLE	PV46
53	BUBBLEMAKECLAMP	PV15
54	FLUSHLOWER	PV54
55	EXITUPPER	PV60
56	STABILYSE	PV50
57	SAMPLEDELIVER	PV55
58	EXITLOWER	PV56
59	STABILYSEENABLE	PV53,PV58
60	SPARE (DIFF)	
61	RESETOPSENSORS	——
62	INDICATOR CBC DATA AQ	——
63	INDICATOR VCS DATA AQ	——
64	SPARE (DIFF)	——
65	MIX	——
REF	COUNT	——
66	RF	——
67	SHEATHREFILL	PV47
68	COMPRESSORBLEED	——
69,71	COMPRFSUPPLY	——
70	WATERTRAP	LV43
REF	VIEWINGLAMP	——

TUBING COLOR CODE

GRN	+30PSI
CLR	CONTAMINATED
BRN	CBC LYSE
ORN	HI OR LO VAC
WHT	ISOTON
EVA	EVA MATERIAL
VIO	PRESSURIZED ISOTON
GRY/BLK	SAMPLE PRESSURE
YEL	HI VAC
RED/BLK	SHEATH PRESS,HI VAC,VENT

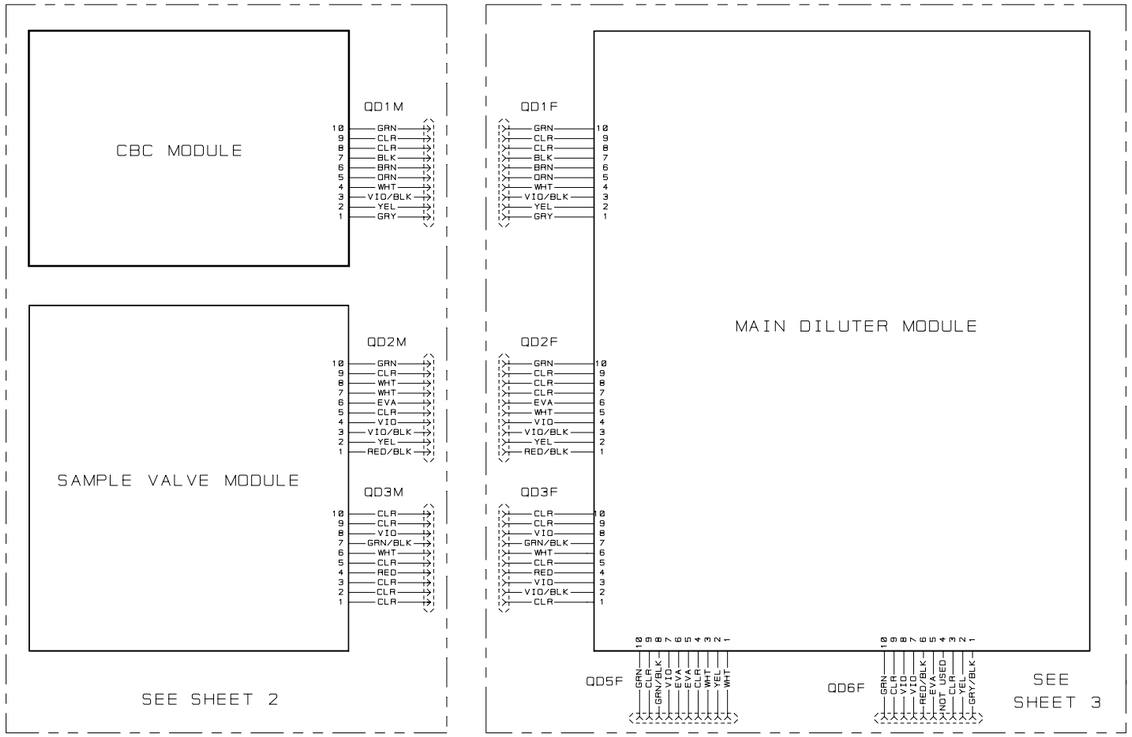

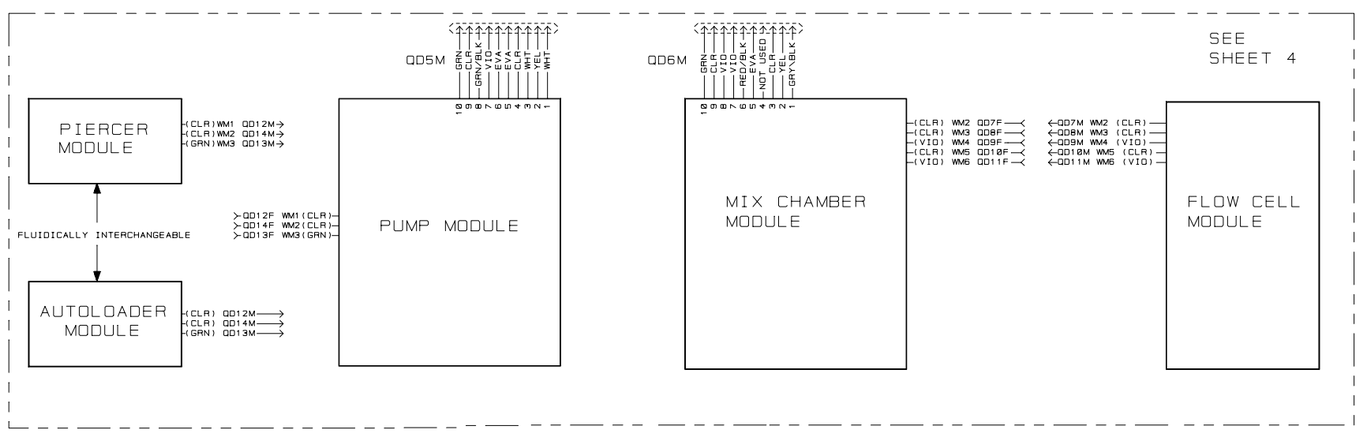

NOTES UNLESS OTHERWISE SPECIFIED

1. ACTUAL LOCATIONS OF FITTINGS AND COMPONENTS MAY DIFFER FROM THE POSITIONS AS SHOWN ON THIS DRAWING.
2. PUMP SYMBOLS INDICATE : -1 IS THE FLUID SIDE (TOP PORT)
   -2 IS THE AIR SIDE.

REVISION

REV	DESCRIPTION	PCN	DATE	BY	CHKR	APPVL
G	SEE SHT 3	8273-533	17DEC91	VN	HCM	JC
H	CHANGED ZONE B-2	8273-550	09JAN92	TF	RFS	RDV
J	SEE SHEET 2	8273-570	20JAN92	VN	RFS	RDV
K	SEE SHEET 2 & 3	8273-578	06FEB92	VN	RFS	RDV
L	NUMEROUS CHNGS TO ALL SHTS	88268	12OCT92	EL	RFS	RDV
M	NUMEROUS CHNGS TO ALL SHTS	88320	08JAN93	EL	RFS	CRG
N	NUMEROUS CHNGS TO ALL SHTS	88483	10SEP93	VN	RFS	SEVH
P	NUMEROUS CHNGS TO ALL SHTS	88499	01NOV93	DM	RFS	SEVH
R	NUMEROUS CHNGS TO ALL SHTS	88627	18MAY94	VN	ALG	SEVH
S	ADDED CK36 & CK37 TO NOT USED; SEE SHT 4.	827368-8846	15AUG96	RFS	MDC	DB
T	PAGE 4 - D5 - ADDED NEW VIEW AND CHANGED PORT NUMBERING ON MC1.	827368-8893	APPROVED R. HEINRICH CPDM APPROVAL			
U	UPDATED LAST USED;ALSO SEE SHEETS 2, 3 AND 4.	REFER TO CPDM	APPROVED S. VARGAS CPDM APPROVAL			
V	REVISION CHANGE ONLY	REFER TO CPDM	APPROVED S. VARGAS CPDM APPROVAL			
W	UPDATE REF DESIGNATORS.	REFER TO CPDM	APPROVED S. VARGAS CPDM APPROVAL			
Y	PROJECT NAME WAS MH010.	REFER TO CPDM	APPROVED S. GALVEZ CPDM APPROVAL			
Z	SEE SHEET 2.	REFER TO CPDM	APPROVED P. LEON CPDM APPROVAL			

THIS DRAWING AND/OR SPECIFICATION IS THE PROPERTY OF COULTER CORPORATION, INC., IS ISSUED IN STRICT CONFIDENCE,AND SHALL NOT BE REPRODUCED,COPIED,OR USED AS THE BASIS FOR THE MANUFACTURE OR SALE OF APPARATUS,WITHOUT PRIOR WRITTEN PERMISSION.

6604432	0273
6604431	0273
NEXT ASSY	MODEL
USED ON	

DWN	E. LOPEZ	19APR90
CHKR	W.WINTER	20APR90
M.E.	R. DEL VALLE	20APR90
E.E.	F. SUAREZ	20APR90
PROJ APPVL	I. GARCIA	23APR90

COULTER CORPORATION.
HIALEAH, FLORIDA
U.S.A.

PNEU/HYDR LAYOUT;
COULTER(R) MAXM/HMX

SIZE	PART/DRAWING NO.	REV
D	6320510	Z

SCALE: NONE | SHEET 1 OF 4

CLASS CODE

PART/ DWG NO.	6320510	REV	Z	SH	2

REVISION						
REV	DESCRIPTION	PCN	DATE	BY	CHKR	APPVL
R	NUMEROUS CHNGS. TO ALL SHTS	88627	18MAY94	VN	MDC	DB
T	PAGE 4 - D5 - ADDED NEW VIEW AND CHANGED PORT NUMBERING ON MC1.	02736-0093	APPROVED R. HEINRICH CPDM APPROVAL			
U	NUMEROUS CHANGES- SEE CN FOR DETAILS.	REFER TO CPDM	APPROVED S. VARGAS CPDM APPROVAL			
V	CHANGES IN ZONE A-3	REFER TO CPDM	APPROVED S. VARGAS CPDM APPROVAL			
W	ZN C-8: ADDED CK1; ZN D-7: UPDATED TO LATEST CONFIG.	REFER TO CPDM	APPROVED S. VARGAS CPDM APPROVAL			
Y	PROJECT NAME WAS MH010.	REFER TO CPDM	APPROVED S. GALVEZ CPDM APPROVAL			
Z	ZONE B-2: ADDED FMT4, REMOVED FY114.	REFER TO CPDM	APPROVED P. LEON CPDM APPROVAL			

CBC MODULE

SAMPLE VALVE MODULE

QD15F SHT 3

QD16M SHT 3

QD1M

SHT 3 DILUTER

QD22M (BLUE)

QD17F SHT4

QD2 M

QD3 M

FMT4 FOAM TRAP

FMT3 FOAM TRAP

LOVAC &WASTE CHAMB

BT1 WBC BATH

BT2 RBC BATH

CBC LYSE

CBC OVERFLOW VC8

SWEEP FLOW SF1

VC2 BUBBLE TRAP

SHEATH TANK

PELTIER MODULE

PLB1 ISOTON ERYTHROLYSE

REAR BLOOD DET.

FRONT BLOOD DET.

TRIPLE SEGMENT BSV

AIR PUMP

MANUAL BLEACH PROBE

FF172-2, SHT 4 (RINSE)

MC1-5, SHT 4 (PRE-PREP)

MC1-3, SHT 4 (5DIFF SAMPLE)

FT33-2, SHT4 (BLEACH)

PN1-2, SHT 4

SIZE	PART/DRAWING NO.	REV
D	6320510	Z
SCALE: NONE	SHEET 2 OF 4	
CLASS CODE		

MAIN DILUTER MODULE

PART/DWG NO. 6320510 | REV Z | SH 3

REVISION						
REV	DESCRIPTION	PCN	DATE	BY	CHKR	APPVL
Y	PROJECT NAME WAS MH010.	REFER TO CPDM	APPROVED S. VARGAS CPDM APPROVAL			
Z	SEE SHEET 2.	REFER TO CPDM	APPROVED P LEON CPDM APPROVAL			

REAGENT INTERCONNECT

LOW VACUUM

SHT 2 CBC MODULE

SHT 2 SAMPLE MODULE

SHT 2 SAMPLE VALVE MODULE

SHT 4 PUMP MODULE

SHT 4 MIX CHAMBER MODULE

SENSOR PCB

VACUUM TRAP

PRESSURE TANK

WATER TRAP

DIFF PAK

COMPRESSOR

HIVAC 60 PSI

DIFF WASTE VC7

FOAM TRAP FMT2

SAMPLE PRESS

SHEATH PRESS

3CC BACKWASH

SIZE	PART/DRAWING NO.	REV
D	6320510	Z
SCALE: NONE	SHEET 3 OF 4	
CLASS CODE		

PART/ DWG NO.	REV	SH
6320510	Z	4

REVISION						
REV	DESCRIPTION	PCN	DATE	BY	CHKR	APPVL
U	NUMEROUS CHANGES- SEE CN FOR DETAILS.	REFER TO CPDM	APPROVED 5. VARGAS CPDM APPROVAL			
V	REVISION CHANGE ONLY	REFER TO CPDM	APPROVED 5. VARGAS CPDM APPROVAL			
W	ZN D-3: UPDATED TO LATEST CONFIG.	REFER TO CPDM	APPROVED 5. VARGAS CPDM APPROVAL			
Y	PROJECT NAME WAS MH010.	REFER TO CPDM	APPROVED 5. GALVEZ CPDM APPROVAL			
Z	SEE SHEET 2.	REFER TO CPDM	APPROVED P. LEON CPDM APPROVAL			

MIX CHAMBER MODULE

(TOP VIEW OF MC1)

PIERCER MODULE

AUTOLOADER MODULE

PUMP MODULE

FLOW CELL MODULE

SIZE	PART/DRAWING NO.	REV
D	6320510	Z
SCALE: NONE	SHEET 4 OF 4	
CLASS CODE		

SHEET 1

PART/DWG NO. 6320619 | REV H | SH 1

REVISION						
REV	DESCRIPTION	ECN	DATE	BY	CHKR	APPVL
D	REVISED & REDRAWN	0373-512	23OCT91	VN	RFS	RDV
E	REVISED & REDRAWN	0273-675	07AUG92	VN	RFS	RDV
F	REVISED & REDRAWN RETIC DOCUMENTATION JAPANESE CONFIGURATION	00645	07SEP94	VN/ OPC	DB	SEVH
G	REVISED & REDRAWN FOR CE MARK	021350 -0613	26JUL96	AOA	AOA	DB
H	REVISED FOR HMX ADDED FLAG 6,7,8 8, 10	REFER TO CPDM	E. ANGULO	CPDM	APPROVAL	

COMPONENT REFERENCE DESIGNATIONS

LAST USED	NOT USED
R2	
RL1	
CR9	CR3 - CR6
S19	
DS3	
XB4	
J121	J74,J76,J77,J79,J83-J87,J89,J91-J100
P121	P74,P76,P77,P89,P93-P100
R1	
J9B	J2B,J3B,J6B,J4B
XJ1	
XJ7B	XJ1B,XJ2B,XJ3B,XJ4B,XJ6B

I00457 (SHEET 2) SYSTEM INTERCONNECT BLOCK DIAGRAM INTCON2.SCH

I00459 (SHEET 3) MISCELLANEOUS MODULES INTCON3.SCH

I00461 (SHEET 4) POWER SUPPLY INTERCONNECT INTCON4.SCH

I00463 (SHEET 5) CARD CAGE INTERCONNECT INTCON5.SCH

I00465 (SHEET 6) POWER DISTRIBUTION INTERCONNECT INTCON6.SCH

I00467 (SHEET 7) SOLENOID HARNESS MODULE INTCON7.SCH

I00469 (SHEET 8) RCP SAMPLE HANDLER MODULE INTCON8.SCH

I00471 (SHEET 9) DMS COMPUTERS (ENGLISH) INTCON9.SCH

I00473 (SHEET 10) MAXM/HMX MODULE AND FRAME GROUNDING POINTS INTCON10.SCH

I00475 (SHEET 11) SAMPLE HANDLER 2 INTCON11.SCH

I00477 (SHEET 12) AUTOLOADER MODULE INTCON12.SCH

I00479 (SHEET 13) 486/PENTIUM OPTIONAL COMPUTERS (ENGLISH) INTCON13.SCH

I00481 (SHEET 14) 486/PENTIUM OPTIONAL COMPUTERS (JAPANESE) INTCON14

I00483 (SHEET 15) DMS COMPUTERS (JAPANESE) INTCON15.SCH

NOTES:

1. WIRE COLOR KEY:

WHT = WHITE	=	+5.6V
BRN = BROWN	=	+24V
GRN = GREEN	=	-15V
BLU = BLUE	=	+12V
BLK = BLACK	=	GND
ORN = ORANGE	=	+15V
YEL = YELLOW	=	+5V

RED = RED
GRA = GRAY
VIO = VIOLET
WHT/BRN = WHITE/BROWN
WHT/GRN = WHITE/GREEN
WHT/BLU = WHITE/BLUE
WHT/BLK = WHITE/BLACK
WHT/ORN = WHITE/ORANGE
WHT/YEL = WHITE/YELLOW
WHT/RED = WHITE/RED
WHT/GRA = WHITE/GRAY
WHT/VIO = WHITE/VIOLET

2. Monitor A/C cable must be connected to the computer in all the configurations.
3. The computer A/C cable must be connected to the analyzer power supply.
4. Zoom Modem in slot 1 is only used in some 115 VAC instruments.(IF AVAILABLE)
5. (4) Metal spacers attach below terminal block mounting plate and are secured to chassis with (4) screws.
6. The HMX-AL leds are part of PCB assembly 6706844. The HMX-CP leds are part of PCB assembly 6706845 (sheet 2 and 6).
7. Viewing Lamps are not available in HMX units (sheet 7).
8. Available in HMX units. Optional in MAXM units (sheet 8).
9. Pin 3 is not connected when Hall Effect Needle sensors are used. (sheet 12).
10. Wire colors with solid state level sensors P/N 6114068. In line fuse protection. (sheet 3).

THIS DRAWING IS PROPERTY OF BECKMAN COULTER. IT IS ISSUED IN STRICT CONFIDENCE AND SHALL NOT BE REPRODUCED, COPIED, OR USED AS THE BASIS FOR THE MANUFACTURE OR SALE OF APPARATUS WITHOUT PRIOR WRITTEN PERMISSION

	SIGNATURE	DATE
DRAWN:	G. FORTUN	13JUN96
	F. HUSHER	21MAY96
	E. ANGULO	02JUN99

COULTER CORPORATION
MIAMI, FLORIDA
U.S.A.

Title: INTERCONNECT DIAGRAM MAXM/HMX SYSTEMS

Size D | Document Number 6320619 | REV R

Date June 2, 1999 | Sheet 1 of 15

SYSTEM INTERCONNECT BLOCK DIAGRAM

PART/ DWG NO. 6320619 | REV H | SH 2

REVISION

REV	DESCRIPTION	PCN	DATE	BY	CHKR	APPVL
D	REVISED & REDRAWN	0273-512	23OCT91	VM	RFS	RDV
E	REVISED & REDRAWN	0273-675	07AUG92	VM	RFS	RDV
F	REVISED & REDRAWN	08645	07SEP94	VM/OPC	DB	SEVH
G	REVISED & REDRAWN	027350 -0813	26JUL96	AOA	AOA	DB
H	ADDED FLAG 8	REFER TO CPDM	E.ANGULO	CPDM APPROVAL		

MAIN DILUTER MODULE (SHEET 7)
P81 J81 P50
SOL 70
WATER TRAP

CBC MODULE (SHEET 7,3)
(J1A) R TO R/W PRE-AMP CARD R (J2A)
RED AP RED LAMP WHT AP WHT PRE AMP
D82 D83
RED VIEW LAMP WHT VIEW LAMP
J27 J28 J29 P26 P54 P82 P80
OVERFLOW DETECTORS FD1 RBC FD2 WBC

TIN MODULE
NOTE: A = RETICS A+B = VCS C = NOT USED
P69 J73 J104 PMT DETECTOR BREAKD 2
J67 P67 SENSOR FLOW CELL
RED CR+ (A) RED CR+ (C) BLK COMM RED CR+ (B)
LASER P66
1 2 3 4 P62 J62 J62A SCATTER PREAMP LS5
ON/OFF SWITCH LASER S10 BLK SW SPST CR8 LED WHT/GRN YEL 1 P106 2 3
J66 J78 J113 J109
J34 J35 J37 ISOTON CLENZ DIS INSECT
LEVEL SENSE HARNESS (SHEET 3 - MAXM ONLY)

AUXILLARY MODULE (PUMP) (SHEET 7)
P53
WASTE LEVEL SENSE EMC FILTER (SHEET 3)
J32 J121

SAMPLE VALVE MODULE (SHEET 7)
P51
J75 J58 J59 J60 P75 P58 P59 P60
S5 TANK S2 S3 S4
SHEATH WHOLE BLOOD RINSE IN RINSE OUT

MIX CHAMBER MODULE (SHEET 7)
P52 J71 P71 DC MOTOR

OVERFLOW DETECT & OPTICAL LEVEL SENSE (SHEET 3)
J3 J4 J5 J6 J7 J8 J9
PNEUMATIC MONITOR J2 J1 JP1

PELTIER MODULE (SHEET 3)
J1 J2 J3 P3
PELTIER CELL THERMISTOR BLK RED TOROID L1 BL1 FAN

LASER POWER SUPPLY (SHEET 3) LASER REF J56 J57 J88

PNEUMATIC MONITOR (SHEET 3 - MAXM ONLY) JP1
OPTICAL OVERFLOW DET. BOARD J1

PRES VAC J90 BL1 FAN
F10 2.5A SB 100/120V PNEUMATIC SUPPLY (SHEET 3) TB1 C1 Y1

CARD CAGE ASSY. (SHEET 5)
J1 J2 J3 J4 J5 J6 J7 J8 J9
J13 J14 J15 J16 J29 J30 J31 J1
DILUTER INTERFACE
J17 J18 J35 J49 J37R J2
MAIN INTERFACE
J8B J9B J10B J11B KJ7B
SLOT 2 SLOT 22 SLOT32 SLOT37 SLOT42 SLOT 58

CPU 376 CARD ASSY. SLOT2
I/O CARD ASSY. SLOT22
DILUTER INTERFACE SLOT32
VCS PROCESSOR SLOT 37
PMP PROCESSOR SLOT42
J1A J2A R/W PRE-AMP SLOT54
DMS COMMUNICATION CABLE P1 J4
DIGI BOARD
DMS COMPUTER (SHEET 9)

PIERCER MODULE (SHEET 8)
BAR CODE SCANNER J46
PCP JUNCTION J2 J4 J3 P1 J1

AUTOLOADER MODULE (SHEET 12)
BAR CODE SCANNER J46
HOUSING INTERFACE PCB J1 J2 J3 J4 J5 SOL1 J6 SOL4 J7 SOL5 J8 SOL6
P16 J9 SOL #2 PIERCE J11
J32 J13 J14 J15 J16 J10 SOL #3 TUBE RAM J17 J18 J19 J20
ROCKER BED INTERFACE PCB J31 J33 J32 J35 J36 J39 J41 J42 J34 J37 J40 J43 J44
SOL #4 RED LOCK SOL #1 TUBE RETURN

SAMPLE HANDLER PCB (SHEET 8) J13 J14 J15 J5 J1 J2 J3
SAMPLE HANDLER 2 PCB (SHEET 11)

BARCODE DECODER MODULE (SHEET 8)
P6 P5 J8 J1 J7 P4

SOLENOID JUNCTION CARD
J1R KJ5B
E3 J23 J22 J24 J19 J20 J21 KJ5R

6

CR2 LED READY GRN CR1 LED STAND BY GRN FRONT PANEL INDICATORS
TB4 TB3 TB2 TB1 POWER/SIGNAL DISTRIBUTION (SHEET 6)
R1 10 OHM (4) GND SYMAPS
Z2 P40 P114 P115 P5 P101 P108 P112 P57 P116 P117
P10 P18 P49 P78 J26 J106 J69 J32 P11 P12 P4 P68 P69 RED BLK L1 TOROID BL1 FAN

J105 J119 J115 J116 J107 J108 J112 J113 J114 J120
APER VOLT PWR FAIL DET PCB J109 J110 P111
POWER SUPPLY ASSY. (SHEET 6)
J102 J103 J104
P106 RED BLK TOROID L1 BL1 FAN
LINE FILTER
F7 F4 K1 F8 F5 K2 F9 F6 K3
S9-1 POWER ON/OFF
BLANK GRN/YEL BLK N E L P101 PLUG AC MALE

COULTER CORPORATION
MIAMI, FLORIDA
U.S.A.

Title: INTERCONNECT DIAGRAM MAXM/HMX SYSTEMS

Size	Document Number	REV
D	6320619	H

Date: June 2, 1999 Sheet 2 of 15

MISCELLANEOUS MODULES

PART/ DWG NO.	REV	SH
6320619	H	3

REVISION						
REV	DESCRIPTION	PCN	DATE	BY	CHKR	APPVL
D	REVISED & REDRAWN	0373-512	23OCT91	VN	RFB	RDV
K	REVISED & REDRAWN	0273-675	07AUG92	VN	RFB	RDV
F	REVISED & REDRAWN	00645	07SEP94	VN/ORC	DB	SEVH
G	REVISED & REDRAWN	27350-813	26JUL96	AOA	AOA	DB
H	UPDATED C2,C8,C8,R1,R2,R4,D4	REFER TO CPDM		EANGULO	CPDM	APPROVAL

CLENZ / ISOTON / LYSE III / PAK

P92-1 BLK SOL 10 — P92-16 RED
P92-2 BLK SOL 11 — P92-15 RED
P92-3 BLK SOL 12 — P92-14 RED
P92-4 BLK SOL 13 — P92-13 RED

OPTICAL LEVEL SENSORS

CLEANING AGENT | DILUENT | PAK PRESERVE | PAK LYSE | LYSE

P67-1 BLK BLK
P67-2 BLK BLU
P67-3 RED RED
P67-4 WHT GRN

P66-1 BLK BLK
P66-2 BLK BLU
P66-3 RED RED
P66-4 WHT GRN

P65-1 BLK BLK
P65-2 BLK BLU
P65-3 RED GRN
P65-4 WHT RED

P64-1 BLK BLK
P64-2 BLK BLU
P64-3 RED RED
P64-4 WHT GRN

P63-1 BLK BLK
P63-2 BLK BLU
P63-3 RED RED
P63-4 WHT GRN

WASTE SENSOR

RED 1 — BLK 2 — P35 J35 — P32 J32 — WASTE — LEVEL SENSE EMC FILTER — J321 P321 — 1 3

J132-1 WHT/BLU
J132-3 WHT/VIO
J132-5 WHT/GRA
J132-7 WHT
J132-9 WHT/BLK
J132-11 WHT/BRN
J132-13 N.C.
J132-15 N.C.
J132-2 BLK
J132-4 BLK
J132-6 BLK
J132-8 BLK
J132-10 BLK
J132-12 BLK
J132-14 BLK

P7

RED 1 — BLK 2 — N.C. 3 — N.C. 4 — N.C. 5 — N.C. 6 — RED 7 — BLK 8 — N.C. 9 — N.C. 10 — RED 11 — BLK 12 — RED 13 — BLK 14 — 15 — J132 P132

LEVEL SENSORS: J36 J34 J35 J37 W.C.

WASTE (EARLY) | ISOTON MAXM | CLENZ MECHANICAL LEVEL SENSORS | DISINFECT

TIM MODULE

NOTES:
A = METRIC
A+B = VCS
C = NOT USED

J69 P69 — P73 J73 — P104 J104

RF DETECTOR PREAMP 2

J67 P67

(BNC) CORX SHIELDED CABLE

SENSOR

FLOW CELL

LASER

P68

HIGH VOLTAGE SHIELDED CABLE

RED CR+ (A)
RED CR+ (C)
BLK COMM
RED CR+ (B)

1 2 3 4

P62 — J62 — J62A

ON/OFF SWITCH LASER

SCATTER PREAMP LS5

S19 SW SPST — CR8 LED — BLK — WHT/GRN — YEL — 1 P106 J106 — 2 — 3

J66 P66 — J70 P70 — J113 P113 — J109 P109

2 COAX — BLK ANLG GND SHIELD

J106-1 BLK — J106-2 WHT/GRN

GRN LS PREAMP(+15V) P66-1
GRN LS PREAMP(-15V) P66-2
BLK LS PREAMP(ANLG GND) P66-3

LS+ RED P70-1
LS- BLK P70-2
SHIELD(SLEEVING) SHLD P70-3

P49 — SHIELDED CABLE

OVERFLOW DETECTOR BOARD 2

P93 J3
P94 J4
P95 J5
P96 J6
P97 J7
P92 J8
WOT USED J9

PNEUMATIC MONITOR

J2 P91
J1 P79
JP1 P1

P91-1 WHT/BRN — P19-10
P91-2 WHT/BRN — P19-13
P91-3 WHT/BRN — P19-14
P91-4 WHT/BRN — P19-15

P79-5 WHT/ORN — P7-A13
P79-2 — N.C.
P79-3 WHT/GRN /RESET SEN — P19-23
P79-4 WHT/RED /FLUID DET — P7-A22
P79-1 GRN +15V — TB3-A6
P79-26 GRN -15V — TB3-A2
P79-24 BLK AGND — TB1-3
P79-25 BRN +24V — TB4-B8

P79

P1-1 WHT 30PSI SIGNAL
P1-2 WHT/BLK 60PSI SIGNAL
P1-3 WHT/RED HI VAC
P1-4 WHT/VIO SHEATH PRESS
P1-5 WHT/BRN LOW VAC
P1-6 WHT/GRA DIFF PRESS
P1-7 N.C.
P1-8 GRN -15V TB3-A3
P1-9 ORN +15V TB3-A7
P1-10 BLK ANLG GND TB1-8
P1-11 N.C.
P1-12 N.C.
P1-13 N.C.
P1-14 N.C.
P1-15 N.C.
P1-16 N.C.

P7

J3 YEL +5V TB4-1A
J2 WHT/BRN VCS/METRIC P1-C9
J1 BLK DGTL GND TB2-4

P113-1 P7-A14

SHIELDED CABLE

P109-1 RED +5V
P109-2 BLK VCS/METRIC
P109-3 CLR METRIC/VCS
SHIELD DGTL GND

E4 E3 YEL
E5 METRIC INTERFACE ASSY. 6705782 E2 WHT/BRN
E6 E1 BLK
E7

LS MON COAX CLR

LASER POWER SUPPLY

100/120V P/N 6320611
220/240V P/N 6320612

LASER REF — J56 P56 — J57 P57 — J68 P68

+ HV SHIELDED CABLE
- HV SHIELDED CABLE

WHT/GRN LASER COVER SWITCH P57-4
BLK LASER COVER RETURN P57-5

P56-1 BRN HOT
P56-2 BLU NEUTRAL
P56-3 GRN/YEL CHASSIS

P114

P57-1 +24V BRN — P116-5
P57-2 +24V GND BLK — P116-10
P57-3 N.C.
P57-6 N.C.
P57-7 N.C.
P57-8 N.C.
P57-9 LASER VOLTAGE MONITOR WHT/YEL — P7-A4

ISOTON FLUID LINE

RED APERTURE
SHEATH FLOW IN WHT/YEL
SHEATH FLOW SLINKY'S BLK
CBC SLINKY'S BLK
SHEATH FLOW CANISTER

BLU 1 — BRN 2 — YEL 3 — WHT 4 — SHIELD — SDL CABLE

-SIGNAL ANLG GND J1A-1
+SIGNAL ANLG GND J1A-2
ANLG GND J1A-3
ANLG GND J1A-4
ANLG GND SHIELD
J1A

TO RH PRE-AMP

J2A

(SHEET 7) CBC MODULE

WBC SLINKY'S BLK
N.C.
WHT APERTURE

WHT 4 — YEL 3 — BRN 2 — BLU 1 — SHIELD — SDL CABLE

-SIGNAL ANLG GND J2A-1
+SIGNAL ANLG GND J2A-2
ANLG GND J2A-3
ANLG GND J2A-4
ANLG GND SHIELD

TB2-7 BLK HV GND P5-1
TB4-A8 BRN +24V P5-2
TB3-A10 BLU +12V P5-3

PELTIER MODULE

P5 J1 — P4 J2 — J3 — P3

1 2 3 4 — GRN WHT BLK RED

PELTIER CELL — THERMISTOR — TOROID

BL1 FAN

TB3-A6 +15V GRN P4-1
TB3-A2 -15V GRN P4-2
TB1-7 ANLG GND BLK P4-3
N.C. P4-4

P7 P7-A25 /READY WHT/GRN P4-5
P7-A2 LYSE T WHT/RED P4-6
P7-A3 AMBIENT T WHT/ORN P4-7
P7-A18 /ENBL AUTO WHT/GRA P4-8
P7-A16 /COOL WHT/BLU P4-9
P7-A17 /HEAT WHT/VIO P4-10

TB4-A3 +5V YEL P4-11
TB2-4 DIG GND BLK P4-12
N.C. P4-13
N.C. P4-14
J77-1 THERMISTOR REF WHT/BLU P4-15
J77-2 AMBIENT THERMISTOR BLK P4-16

PNEUMATIC SUPPLY 120V

BL1 FAN — PRES — VAC

CREF — ZERO — SPAN

BLK BLK
GRN WHT — GRN WHT
BLK BLK
GRN/YEL

TB1
5 BLU
4 WHT/ORN
3 WHT/GRY
2 WHT/BLU
1 WHT/RED

N.C. 2
N.C. 1

SPAN 1 BLU 2 3 — J90 P90

C1 MTR CAP

WHT/RED 3 — WHT/BLU 4 — WHT/GRY 5 — WHT/ORN 6 — 1 — 2

GRN/YEL — GRN/YEL — GRN/YEL — WHT — BLU — WHT/BRN — BLU

2.5A SB — F10
F10 = 1.5A FOR 220/240V

E35

P90-1 BRN HOT
P90-2 BLU NEUTRAL
P90-3 GRN/YEL CHASSIS

P113

PNEUMATIC SUPPLY 100/120V P/N 6320683
PNEUMATIC SUPPLY 220/240V P/N 6320682

COULTER CORPORATION
MIAMI, FLORIDA
U.S.A.

Title: INTERCONNECT DIAGRAM MAXM/HMX SYSTEMS

Size	Document Number	REV
D	6320619	H
Date: June 2, 1999	Sheet 3 of 15	

POWER SUPPLY INTERCONNECT

PART/DWG NO. 6320619 | REV H | SH 4

REVISION

REV	DESCRIPTION	ECN	DATE	BY	CHKR	APPVL
D	REVISED & REDRAWN	0373-512	23OCT91	VN	KFS	RDV
E	REVISED & REDRAWN	0273-615	07AUG92	VN	KFS	RDV
F	REVISED & REDRAWN	98645	07SEP94	VN/GPC	DB	SEVH
G	REVISED & REDRAWN	27350-813	20JUL95	AOA	AOA	DB
H	CHANGED SW5 TO SW1 UPDATED NOTE FOR SWITCH SW1 ADDED P.S. PIN NUMBERS, AREA B4	REFER TO CPDM	E. ANGULO CPDM APPROVAL			

P56	BRN	A.C. LINE	P114-1	
	BLU	A.C. NEUT.	P114-2	
	GRN/YEL	CHAS. GND	P114-3	
P50	BRN	A.C. LINE	P113-1	
	BLU	A.C. NEUT.	P113-2	
	GRN/YEL	CHAS. GND	P113-3	
X20-24	WHT/VIO	PF ON SIG.	P112-1	
X21-23	WHT/BLU	COMP. ON	P112-2	
P7-A5	WHT/BLK	300VDC REF	P112-3	
P11-1	WHT/GRN	A.C. LOWS	P112-4	
CR1-1	WHT/RED	STDBY LED	P112-5	
CR1-2	WHT/BLU	STDBY LED	P112-6	
CR2-1	WHT/VIO	READY LED	P112-7	
CR2-2	WHT/GRA	READY LED	P112-8	

OPERATOR STANDBY/READY SWITCH

I SW1 O

LOCATED ON MAIN RIGHT FRONT PANEL OR ON MAN LEFT BOTTOM PAN.

P11-2	WHT	+5.6VDC	P108-1	
N.C.		+5.6VDC	P108-2	
TB2-3	BLK	+5.6VCOM	P108-3	
N.C.		+5.6VCOM	P108-4	
SW1-2	BLK	+5.6VCOM OP SW	P108-5	
SW1-1	WHT/BRN	OP. SWITCH	P108-6	
N.C.		CHASSIS GND	P108-7	
N.C.		N.C.	P108-8	
N.C.		+6.3VDC REF	P108-9	
TB1-6	BLK	TO GND BUS BAR	P108-10	
TB1-2	BLK	+240V COM	P108-11	
P18-7	RED	+240 VDC	P108-12	

TB3-B10	BLU	+12VDC	P107-1	
TB3-B9	BLU	+12VDC	P107-2	
TB3-B9	BLU	+12VDC	P107-3	
TB2-10	BLK	+12VCOM	P107-4	
TB2-9	BLK	+12VCOM	P107-5	
TB2-9	BLK	+12VCOM	P107-6	

TB4-B9	BRN	X3(24VDC)	P116-1	
TB4-B10	BRN	X3(24VDC)	P116-2	
TB4-B7	BRN	+24VDC	P116-3	
TB4-B8	BRN	+24VDC	P116-4	
P5-1	BRN	+24VDC	P116-5	
TB2-6	BLK	+24VCOM	P116-6	
TB2-6	BLK	+24VCOM	P116-7	
TB2-6	BLK	+24VCOM	P116-8	
TB2-6	BLK	+24VCOM	P116-9	
P5-6	BLK	+24VCOM	P116-10	
N.C.			P116-11	
N.C.			P116-12	

J69-1	RED	+300VDC	P115-1	
TB1-9	BLK	+300VCOM	P115-2	
TB4-B5	WHT/BRN	+6.3VDC	P115-3	
TB1-9	BLK	+6.3VCOM	P115-4	

TB4-B1	YEL	+5VDC	P105-1	
TB4-B2	YEL	+5VDC	P105-2	
TB4-B3	YEL	+5VDC	P105-3	
TB4-B4	YEL	+5VDC	P105-4	
TB2-5	BLK	+5VCOM	P105-5	
TB2-5	BLK	+5VCOM	P105-6	
TB2-5	BLK	+5VCOM	P105-7	
TB2-5	BLK	+5VCOM	P105-8	
TB3-B5	GRN	+15VDC	P105-9	
TB3-B7	GRN	+15VDC	P105-10	
TB3-B1	GRN	-15VDC	P105-11	
TB3-B3	GRN	-15VDC	P105-12	
TB1-4	BLK	+/- 15VCOM	P105-13	
TB1-4	BLK	+/- 15VCOM	P105-14	
TB1-5	BLK	+/- 15VCOM	P105-15	

P105 | NOT USED | P115 | P116 | P107 | P108 | P112 | P113 | P114

J105 | J119 | J115 | J116 | J107 | J108 | J112 | J113 | J114

10 8

POWER SUPPLY ASST.

J102 COMPUTER AC OUTLET 115V @ 4.0A

ABER VOLT

PWR FAIL DET

J109

J110

P111

TEST POINTS

J120

+5V	1
+5.6V	2
+15V	3
-15V	4
N.C.	5
+24V	6
+12V	7
6.3V	8
GND	9

GND

220/240V	1/16	F7	2A F4	3.2A F1
	1/8	F8	1A F5	3.2A F2
	.2A	F9	1A F6	.25A F3
100/120V	3/8	F7	4A F4	6.25A F1
	1/4	F8	2A F5	6.25A F2
	.4A	F9	2A F6	.5A F3

F1= AC LINE
F2= AC LINE
F3= 5.6V CNTRL
F4= +5,+/-15VDC
F5= +24VDC
F6= +12VDC
F7= RPVOLT +240VDC
F8= PF(+300,6.3V)
F9= LASER SUPPLY

P106 1 RED 2 BLK

TOROID L1

BL1 FAN

BLUE N
GRN/YEL E
BLK L

P101 PLUG AC MALE

POWER ON/OFF SW-1

COULTER CORPORATION
MIAMI, FLORIDA
U.S.A.

Title: INTERCONNECT DIAGRAM MAXM/HMX SYSTEMS

Size	Document Number	REV
D	6320619	H

Date: June 2, 1999 | Sheet 4 of 15

CARD CAGE INTERCONNECT

PART/DWG NO. 6320619 | REV H | SH 5

REVISION						
REV	DESCRIPTION	PCN	DATE	BY	CHKR	APPVL
D	REVISED & REDRAWN	0373-512	23OCT91	VN	KFS	RDV
E	REVISED & REDRAWN	0273-675	07AUG92	VN	KFS	RDV
F	REVISED & REDRAWN	08645	07SEP94	VN	DB	SEVH
G	REVISED & REDRAWN	27350-013	26JUL98	AOA	AOA	DB
H	REVISION CHANGE ONLY	REFER TO CPDM	E.ANGULO CPDM APPROVAL			

TB4-A1 YEL +5V P13-1
TB4-A1 YEL +5V P13-2
TB2-1 BLK DGTL GND P13-3
TB2-1 BLK DGTL GND P13-4

TB4-A2 YEL +5V P14-1
TB4-A2 YEL +5V P14-2
TB2-1 BLK DGTL GND P14-3
TB2-1 BLK DGTL GND P14-4

TB3-A8 GRN +15V P10-1
TB3-A4 GRN -15V P10-2
TB1-10 BLK ANLG GND P10-3

P112-4 WHT/GRN ACLO P11-1
P109-1 WHT +5.6V P11-2

TB3-A8 GRN +15V P12-1
TB3-A4 GRN -15V P12-2
TB1-10 BLK ANLG GND P12-3

TB3-A5 GRN +15V P18-1
TB1-1 BLK ANLG GND P18-2
TB4-A4 YEL +5V P18-3
TB1-1 BLK ANLG GND P18-4
TB1-1 BLK ANLG GND P18-5
TB3-A1 GRN -15V P18-6
P108-12 RED +240V P18-7
TB1-2 BLK ANLG GND P18-8
N.C. CHASSIS GND P18-9

P73-1 N.C. P55-1
P73-2 N.C. P55-2
P73-3 RF- P55-3
P73-4 RF+ P55-4
P73-5 DC- P55-5
P73-6 DC+ P55-6
P73

P78-1 RED L6+ P49-1
P78 P78-2 BLK L6- P49-2
P78-3 SHLD SHIELD (SLEEVING) P49-3

P4-6 WHT/RED LYSE TEMPERATURE P7-A1
P4-7 WHT/GRN AMBIENT TEMPERATURE P7-A2
P51-9 WHT/YEL LASER VOLTAGE MONITOR P7-A3
P112-3 WHT/BLK RF VOLTAGE REF +300VDC P7-A4
TB4-A5 WHT/BRN P7-A5
P1-8 WHT/VIO SHEATH PRESS P7-A6
P1-6 WHT/GRA DIFF PRESS P7-A7
P1 P1-1 WHT 30PSI SIGNAL P7-A8
P1-2 WHT/BLK 60PSI SIGNAL P7-A9
P1-5 WHT/BRN LOW VAC P7-A10
P1-3 WHT/RED RI VAC P7-A11
P113-1 CLR COAX SIGNAL L6 MON REF P7-A12
N.C. P7-A13
N.C. P7-A14
P4-9 WHT/BLU COOL (LOW ACTIVE) P7-A15
P4-10 WHT/VIO HEAT (LOW ACTIVE) P7-A16
P4-8 WHT/GRA ENABLE AUTO (LOW ACTIVE) P7-A17
J54-14 WHT P7-A18
J54-13 BLK P7-A19
J26-5 CLR COAX SIGNAL HGB SIGNAL P7-A20
J26-4 BLK COAX SHIELD HGB CABLE SHIELD P7-A21
TB3-A9 BLU +12V P7-A22
N.C. P7-A23
P4-5 WHT/GRN TEMPERATURE READY (LOW ACTIVE) P7-A24
WHT/BLU WASTE LVL SENSOR P7-A25
WHT/VIO 5 DIFF LYSE LVL SENSOR P7-A26
WHT/GRA QUENCH LEVEL SENSOR P7-A27
J32 WHT DILUENT LEVEL SENSOR P7-A28
WHT/BLK LYSE LEVEL SENSOR P7-A29
WHT/BRN CLENZ LEVEL SENSOR P7-A30
P7-A31

P79-4 WHT/RED /FLUID DET P7-A32
P113-2 BLK COAX SHIELD L6 MON RET P7-B36
E2 WHT/BRN VCS/RSTIC SW P7-C9
HGB RES-1 WHT/GRN P7-C30
TB4-A7 BRN +24V MONITOR P7-C31
TB2-A6 BLK HIGH NOISE GND P7-C32

TB4-A9 BRN +24V P24-1
TB2-7 BLK HIGH NOISE GND P24-2
TB2-3 BLK DGTL GND P24-3
N.C. P24-4
N.C. P24-5

CARD CAGE ASSY.

P13 J13
P14 J14
P10 J10
P11 J11
P12 J12
N.C. KJ1
N.C. KJ9
K1
N.C. J17
P18 J18
P55 J55
P49 J49
P7 KJ7B
E2
J1B
KJ7B
KJB5
SOLENOID JUNCTION CARD
K3 J23 J24 J22 J19 J20 J21 KJ5B
NOT USED
NOT USED

J1 J2 J3 J4 J5 J6 J7 J8 J9
DIGITAL BACKPLANE
J8B J9B J10B J11B
ANALOG BACKPLANE

SLOT 2
SLOT 22
SLOT32
SLOT37
SLOT42
SLOT 54

P21
P20
P19
TO SHT 7

P22-1 N.C. N.C. J25-1
P22-2 RS232 RXD WHT/RED J25-2
P22-3 RS232 TXD WHT/GRN J25-3
P22-4 RS232 DTR(+5) YEL J25-6
P22-5 RS232 GND BLK J25-7
P22-26 N.C. N.C. J25-20
P22-25 RS232 RTS WHT/GRN J25-5
P22-24 RS232 CTS WHT/YEL J25-4
25 PIN D-TYPE CONNECTOR

FB1 P1 TO SHT 9
FB2 P33 TO SHT 8

P22-6 BLK
P22-8 WHT/GRA
P22-20 WHT/BLK
P22-9 WHT
P22-10 WHT/BLK
P22-17 WHT/VIO
P22-18 WHT/GRA
P22-19 WHT
P22-7 WHT/VIO
P22-21 WHT/BRN

COULTER CORPORATION
MIAMI, FLORIDA
U.S.A.

Title: INTERCONNECT DIAGRAM MAXM/HMX SYSTEMS

Size D | Document Number 6320619 | REV H
Date June 2, 1999 | Sheet 5 of 15

POWER DISTRIBUTION INTERCONNECT

PART/DWG NO. 6320619 | REV H | SH 6

REV	DESCRIPTION	PCN	DATE	BY	CHKR	APPVL
D	REVISED & REDRAWN	0373-512	23OCT91	VN	RFS	RDV
E	REVISED & REDRAWN	0273-615	07AUG92	VN	FWS	JC
F	REVISED & REDRAWN	08645	07SEP94	VN/OPC	DB	SEVH
G	REVISED & REDRAWN	27350-813	26JUL98	AOA	AOA	DB
H	ADDED CONN P74/J74, CHANGED LEDS VIEW, PIN AND REF NUM. ADDED HMX LEDS CONFIGURATION.	REFER TO CPDM		E. ANGULO CPDM APPROVAL		

TB1
ANLG GND BLK
ANLG GND (+24V) BLK
ANLG GND BLK
ANLG GND(+/- 15V) BLK
ANLG GND(+/- 15V) BLK
GND (EXTERNAL DVM REF) BLK
ANLG GND BLK
ANLG GND BLK
ANLG GND(+300/+6.3) BLK
ANLG GND BLK

TB2
DGTL GND BLK
DGTL GND BLK
DGTL GND BLK
DGTL GND BLK
DGTL GND(+5V) BLK
H.N. GND(+24V) BLK
H.N. GND BLK
H.N. GND BLK
H.N. GND (+12V) BLK
DGTL GND/H.N.GND BLK

+12V BLU
+12V BLU
+15V GRN
+15V GRN
-15V GRN
GRN

TB3
-15V GRN
-15V GRN
-15V GRN
-15V GRN
+15V ORN
ORN
+15V ORN
+15V ORN
+12V MONITOR BLU
+12V BLU

+24V BRN
+24V BRN
+24V BRN
+24V BRN
+6.3V WHT/BRN
+5V YEL
+5V YEL
+5V YEL
+5V YEL

TB4
+5V YEL
+5V YEL
+5V YEL
+5V YEL
+6.3V WHT/BRN
+24V BRN
+24V BRN
+24V BRN

P7-A21 COAX SIGNAL (CLR) J26-5
P7-A22 COAX SHIELD (BLK) J26-4
TB1-3 BLK ANLG GND J26-3
TB3-A6 GRN -15V J26-2
TB3-A8 ORN +15V J26-1

P7-A26 WASTE LVL SENSOR WHT/BLU J32-1
P7-A27 S DIFF LYSE LVL SENSOR WHT/VIO J32-3
P7-A28 QUENCH LEVEL SENSOR WHT/GRA J32-5
P7-A29 DILUENT LEVEL SENSOR WHT J32-7
P7-A30 LYSE LEVEL SENSOR WHT/BLK J32-9
P7-A31 CLEAN LEVEL SENSOR WHT/BRN J32-11
P7-A32 DISINFECT LEVEL SENSOR WHT/RED J32-13
BLK DGTL GND J32-2
BLK DGTL GND J32-4
BLK DGTL GND J32-6
BLK DGTL GND J32-8
BLK DGTL GND J32-10
BLK DGTL GND J32-12
TB2-2 BLK DGTL GND J32-14

TB3-A5 GRN +15V P18-1
TB1-1 BLK ANLG GND P18-2
TB4-A4 YEL +5V P18-3
TB1-1 BLK ANLG GND P18-4
TB1-1 BLK ANLG GND P18-5
TB3-A1 GRN -15V P18-6
P108-12 RED +240V P18-7
TB1-2 BLK ANLG GND P18-8
N.C. CSA881S GND P18-9

TB1-9 BLK ANLG GND P2-1
N.C. P2-2
TB4-A3 YEL +5V P2-3
TB3-A7 GRN +15V P2-4
TB3-A3 GRN -15V P2-5
TB2-10 BLK DGTL GND P2-6

P11-2 WHT +5.6VDC P108-1
N.C. +5.6VDC P108-2
TB2-3 BLK +5.6V COM P108-3
N.C. +5.6VCOM P108-4
SW2-2 BLK +5.6V COM OP SW P108-5
SW2-1 WHT/RED OP SWITCH P108-6
N.C. CSA881S GND P108-7
N.C. N.C. P108-8
N.C. +6.3VDC REF P108-9
TB1-6 BLK TO GND BUS BAR P108-10
TB1-7 BLK +240V COM P108-11
P18-7 RED +240VDC P108-12

P115-1 RED +300V J69-1
TB1-6 BLK AMLG GND J69-2
TB4-A5 WHT/BRN +6.3V J69-3
N.C. J69-4
N.C. J69-5
TB1-6 BLK AMLG GND J69-6
TB3-A6 GRN +15V J69-7
TB3-A2 GRN -15V J69-8
TB1-6 BLK AMLG GND J69-9

J26
J69-7 GRN +15V P66-1
J69-9 GRN -15V P66-2
J69-9 BLK AMLG GND P66-3

TB3-A8 GRN +15V P10-1
TB3-A4 GRN -15V P10-2
TB1-10 BLK AMLG GND P10-3

TB2-7 BLK FN GND P5-1
TB4-A9 BRN +24V P5-2
TB3-A10 BLU +12V P5-3

P20-24 WHT/VIO RF ON SIG. P112-1
P71-23 WHT/BLU COMP ON. P112-2
P7-A5 WHT/BLK 300VDC REF P112-3
P11-1 WHT/GRN AC LOWS P112-4
CR1-1 WHT/RED STDBY LED P112-5
CR1-2 WHT/BLU STDBY LED P112-6
CR2-1 WHT/VIO READY LED P112-7
CR2-2 WHT/GRA READY LED P112-8

P116-5 BRN +24V P57-1
P116-10 BLK +24V GND P57-2
N.C. P57-3
J106-2 WHT/ORN LASER SW P57-4
J106-1 BLK LASER SW- P57-5
N.C. P57-6
N.C. P57-7
N.C. P57-8
P7-A4 WHT/YEL LASER MON P57-9

TB4-B9 K3(24VDC) BRN P116-1
TB4-B10 K3(24VDC) BRN P116-2
TB4-B7 +24VDC BRN P116-3
TB4-B8 +24VDC BRN P116-4
P57-1 +24VDC BRN P116-5
TB2-6 +24VCOM BLK P116-6
TB2-6 +24VCOM BLK P116-7
TB2-6 +24VCOM BLK P116-9
TB2-6 +24VCOM BLK P116-10
N.C. P116-11
N.C. P116-12
P57-6 +24VCOM BLK

J69-1 RED +300VDC P115-1
TB1-9 BLK +300VCOM P115-2
TB4-B5 WHT/BRN +6.3VDC P115-3
TB1-9 BLK +6.3VCOM P115-4

TB2-8 BLK J68-1
TB4-B6 BRN J68-2

TB4-A9 BRN +24V P24-1
TB2-7 BLK HIGH NOISE GND P24-2
TB2-3 BLK DGTL GND P24-3
N.C. P24-4
N.C. P24-5

TB4-A2 YEL +5V P14-1
TB4-A2 YEL +5V P14-2
TB2-1 BLK DGTL GND P14-3
TB2-1 BLK DGTL GND P14-4

TB3-A9 BLU +12V P3-1
TB2-10 BLK S.N. GND P3-2
N.C. P3-3
N.C. P3-4
TB4-A8 BRN +24V P3-5
TB2-10 BLK S.N. GND P3-6

TB4-A1 YEL +5V P13-1
TB4-A1 YEL +5V P13-2
TB2-1 BLK DGTL GND P13-3
TB2-1 BLK DGTL GND P13-4

TB4-B1 YEL +5VDC P105-1
TB4-B2 YEL +5VDC P105-2
TB4-B3 YEL +5VDC P105-3
TB4-B4 YEL +5VDC P105-4
TB2-5 BLK +5VCOM P105-5
TB2-5 BLK +5VCOM P105-6
TB2-5 BLK +5VCOM P105-7
TB2-5 BLK +5VCOM P105-8
TB3-A5 BLK +15VDC P105-9
TB3-B7 ORN +15VDC P105-10
TB3-B1 ORN -15VDC P105-11
TB3-B3 ORN -15VDC P105-12
TB1-4 GRN +/-15VCVOM P105-13
TB1-4 BLK +/-15VCVOM P105-14
TB1-5 BLK +/-15VCVOM P105-15

P57-5 LASER SW BLK J106-1
P57-4 LASER SW WHT/ORN J106-2

P1-A9 30PSI SIGNAL WHT P1-1
P1-A10 60PSI SIGNAL WHT/BLK P1-2
P1-A12 HI VAC WHT/RED P1-3
P1-A7 BREATH PRESS WHT/VIO P1-4
P1-A11 LOW VAC WHT/BRN P1-5
P1-A8 DIFF PRESS WHT/GRA P1-6
N.C. P1-7
TB3-A3 -15V GRN P1-8
TB3-A7 +15V ORN P1-9
TB3-A9 AMLG GND BLK P1-10
N.C. P1-11
N.C. P1-12
N.C. P1-13
N.C. P1-14
N.C. P1-15
N.C. P1-16

P112-4 WHT/GRN ACLO
P108-1 WHT +5.6V

R1 10 OHM

TB3-A6 ORN +15V RGB LAMP R-1

P7-C30 RGB RES-1 WHT/ORN
P112-7 (CR1-1) READY LED + WHT/VIO
P112-8 (CR1-2) READY LED- WHT/GRA
P112-5 (CR2-1) STANDBY LED + WHT/RED
P112-6 (CR2-2) STANDBY LED- WHT/BLU

P113-1 LS MON REF COAX SIGNAL CLR
P113-2 LS MON RET COAX SHIELD BLK

P7-A1 N.C.
P7-A2 LYSE TEMP WHT/RED P4-6
P7-A3 AMBIENT TEMP WHT/ORN P4-7
P7-A4 LASER VOLTAGE MON WHT/YEL P51-9
P7-A5 N.C.
P7-A6 RF VOLTAGE REF WHT/BRN TB4-A5
P7-A7 SHEATH PRESS WHT/VIO P1-4
P7-A8 DIFF PRESS WHT/GRA P1-6
P7-A9 30PSI SIGNAL WHT P1-1
P7-A10 60PSI SIGNAL WHT/BLK P1-2
P7-A11 LOW VAC WHT/BRN P1-5
P7-A12 HIGH VAC WHT/RED P1-3
P7-A13 LS MON REF CLR COAX SIGNAL P113-1
P7-A14 N.C.
P7-A15 N.C.
P7-A16 COOL (LOW ACTIVE) WHT/BLU P4-9
P7-A17 HEAT (LOW ACTIVE) WHT/VIO P4-10
P7-A18 ENABLE AUTO (LOW ACTIVE) WHT/GRA P4-8
P7-A19
P7-A20
P7-A21 RGB SIGNAL COAX SIGNAL CLR J76-5
P7-A22 RGB RET COAX SHIELD BLK J76-4
P7-A23 +12V BLU TB3-A9
P7-A24 N.C.
P7-A25 TEMP READY (LOW ACTIVE) WHT/GRN P4-5
P7-A26 WASTE LEVEL SENSOR WHT/BLU J32-1
P7-A27 S DIFF LYSE LVL SENSOR WHT/VIO J32-3
P7-A28 QUENCH LEVEL SENSOR WHT/GRA J32-5
P7-A29 DILUENT LEVEL SENSOR WHT J32-7
P7-A30 LYSE LEVEL SENSOR WHT/BLK J32-9
P7-A31 CLEAN LEVEL SENSOR WHT/BRN J32-11
P7-A32
P7-B30 LS MON RET BLK COAX SHIELD P113-2
P7-C30 WHT/ORN RGB RES-1
P7-C31 +24V MONITOR BRN TB4-A7
P7-C32 RGB NOISE GND BLK TB2-A8

J56-14
J56-13
P79-4

HMX CONFIGURATION
P74 J1
STAND BY GRN LED D1
READY GRN LED D2
SEE ALSO SHEET 12

STOP SW-LEDS CARD

MAXM CONFIGURATION
RIGHT FRONT PANEL INDICATORS
P74 J74
STAND BY GRN LED CR2
READY GRN LED CR1

J56 P56
1 BLK
2 RED
BL1
FAN

P66 J69 J32 P10 P19 P5 P7 P108 P112 P57 P116 P115 P107 P12 P4 J77 P24 P14 P3 P13 P105 J106 P1 P11 P113

COULTER CORPORATION
MIAMI, FLORIDA
U.S.A.

Title: INTERCONNECT DIAGRAM MAXM/HMX SYSTEMS

Size D | Document Number 6320619 | REV R
Date June 2, 1999 | Sheet 6 of 15

SOLENOID HARNESS MODULE

PART/DWG NO. 6320619 | REV H | SH 7

REVISION						
REV	DESCRIPTION	PCN	DATE	BY	CHKR	APPVL
D	REVISED & REDRAWN	0373-512	23OCT91	VN	RFS	RDV
E	REVISED & REDRAWN	0273-675	07AUG92	VN	RFS	RDV
F	REVISED & REDRAWN	68645	07SEP94	VN/OPC	DB	SEVH
G	REVISED & REDRAWN	27350-812	21MAY96	AOA	AOA	DB
H	ADDED NOTE 7, AREA D4	REFER TO CPDM	E. ANGULO	CPDM APPROVAL		

MAIN CBC MODULE

BSV MODULE

MIX CHAMBER MODULE

AUXILIARY MODULE

MAIN DILUTER MODULE

Title	INTERCONNECT DIAGRAM MAXM/HMX SYSTEMS
Size	D
Document Number	6320619
REV	H
Date	June 2, 1999
Sheet	7 of 15

COULTER CORPORATION
MIAMI, FLORIDA
U.S.A.

RCP SAMPLE HANDLER MODULE

(SAMPLE HANDLER 2 - SHEET 11)

PART/ DWG NO. 6320619 | REV H | SH 8

REVISION

REV	DESCRIPTION	PCN	DATE	BY	CHKR	APPVL
D	REVISED & REDRAWN	0373-512	23OCT91	VN	KFS	RDV
E	REVISED & REDRAWN	0273-876	07AUG92	VN	KFS	RDV
F	REVISED & REDRAWN	89846	07SEP94	VN/OPC	DB	SEVH
G	UPDATED TITLE BLOCK	27360-812	26JUL98	AOA	AOA	DB
H	UPDATED AREA A8, B8, C7, ADDED BARCODE RECONFIG CABLE, AREA D5, D8	REFER TO CPDM		E. ANGULO CPDM APPROVAL		

BARCODE RECONFIGURE CABLE

JACKETED PROBE CABLE

PIERCER MODULE

BAR CODE SCANNER

NO READ/WAIT LED

GOOD READ LED

SAFETY INTERLOCK S18

SOL 23 CLAMPTUBE

SOL 24 PIERCE NDLE

INTERLOCK SW

HAND DET

BARCODE DET

RCVR

DS1 EMITTER

DS2 EMITTER

MOTOR STEPPER

NEEDLE HOME IR SWITCH U1

NEEDLE FOWARD IR SWITCH U2

NORMAL PIERCE IR SWITCH U3

OVERSIZE PIERCE IR SWITCH U4

TUBE LOADED IR SWITCH U5

RCP JUNCTION

BARCODE DECODER MODULE

TELEPHONE CABLE

FRONT BLOOD DETECTOR

REAR BLOOD DETECTOR

HDR CABLE

SAMPLE HANDLER PCB

COULTER CORPORATION
MIAMI, FLORIDA
U.S.A.

Title: INTERCONNECT DIAGRAM MAXM/HMX SYSTEMS

Size D | Document Number 6320619 | REV H

Date June 2, 1999 | Sheet 8 of 15

PART/ DWG NO.	6320619	REV	SH
		H	9

REVISION

REV	DESCRIPTION	PCN	DATE	BY	CHKR	APPVL
D	REVISED & REDRAWN	0373-512	23OCT91	VN	RFS	RDV
E	REVISED & REDRAWN	0373-675	07AUG92	VN	RFS	RDV
F	REVISED & REDRAWN	98846	07SEP94	VN/OPC	DB	SEVH
G	REVISED & REDRAWN	021350 -013	20JUL98	AOA	AOA	DB
H	ADDED PENTIUM 100 COMPUTER	REFER TO CPDM	E.ANGULO	CPDM APPROVAL		

(ENGLISH)

DMS COMPUTERS

KEYBOARD ASSEMBLY

MAXM COMPUTER

COM1 | COM2 | KEYBOARD | VIDEO | AUX POWER | PRINTER LPT1

SLOT 1 — [RESERVED FOR SERVICE MODEM) — CON 3 — SERVICE PHONE

SLOT 2 — SPARE SLOT

SLOT 3 — DIGIBOARD — CON PORTS — J4 — EB7

SLOT 4 — PARALLEL PRINTER CARD — PRINTER PORT LPT2 — P2

DIGIBOARD BREAKOUT BOX AND CABLE — P1 MAXM (FROM SHT 5); P2 OPTION 1 TICKET PRINTER; P3 HOST COMPUTER; P4 WAND BARCODE READER, WAND BARCODE INTERFACE

P2 — VIDEO DISPLAY

P2 — GRAPHICS PRINTER

(OPTIONAL) GRAPHICS PRINTER — P1

(OPTIONAL) GRAPHICS PRINTER — P1

PENTIUM 100 MHZ DMS COMPUTER

KEYBOARD ASSEMBLY

HMX COMPUTER

COM1 | COM2 | KEYBOARD | PRINTER LPT1 | AUX POWER

CARD SLOTS SHOWN WITH COMPUTER COVER REMOVED

SLOT 1 (J4A1) ISA — SERIAL/PARALLEL (OPTIONAL)

SLOT 2 (J4B1) ISA — DIGIBOARD

SLOT 3 (J4B2) ISA — JAPANESE BOARD (USED WITH JAPANESE CONFIGURATION ONLY)

SLOT 1 (J4C1) PCI — SPARE 64 BIT SLOT

SLOT 2 (J4D1) PCI — SPARE 64 BIT SLOT

SLOT 3 (J4E1) PCI — PCI VGA BOARD 64 BIT

SLOT 4 (J4E2) PCI — SPARE 64 BIT SLOT

(OPTIONAL) — EB7

DIGIBOARD BREAKOUT BOX AND CABLE — P1 HMX (FROM SHT 5); P2; P3 HOST COMPUTER; P4

GRAPHICS PRINTER

LCD VIDEO DISPLAY

COULTER CORPORATION MIAMI, FLORIDA U.S.A.		
Title: INTERCONNECT DIAGRAM MAXM/HMX SYSTEMS		
Size D	Document Number 6320619	REV H
Date June 2, 1999	Sheet 9 of 15	

PART/ DWG NO.	REV	SH
6320619	H	10

REVISION

REV	DESCRIPTION	PCN	DATE	BY	CHKR	APPVL
D	REVISED & REDRAWN	0373-512	23OCT91	VN	RFS	RDV
E	REVISED & REDRAWN	0273-675	07AUG92	VN	RFS	RDV
F	REVISED & REDRAWN	08645	07SEP94	VN/RFC	DB	SEVH
G	CHANGED TITLE BLOCK	027350 -413	26JUL98	AOA	AOA	DB
H	ADDED HMX FRONT VIEW UPDATED "E" POINTS	REFER TO CPDM	E. ANGULO CPDM APPROVAL			

MODULE AND FRAME GROUNDING POINTS

MAXM FRONT VIEW

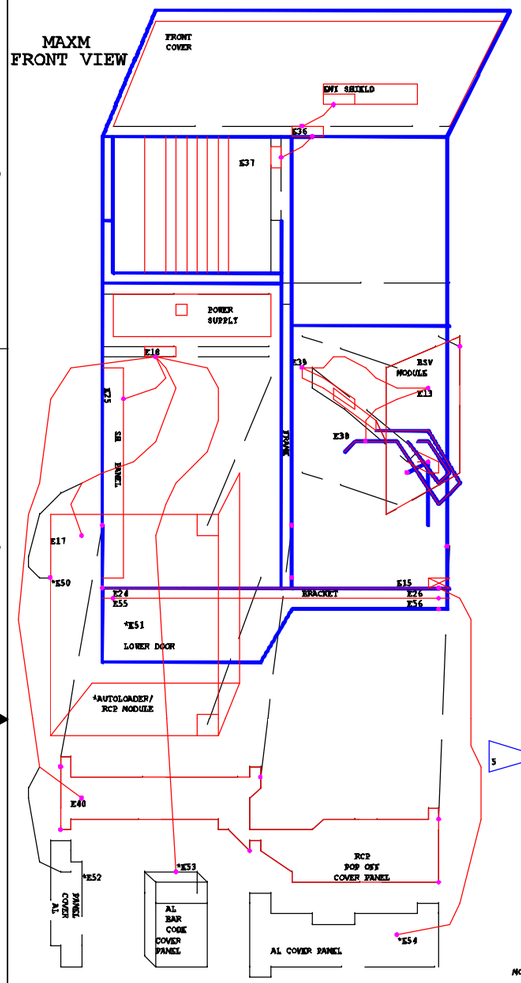

MAXM & HMX REAR VIEW

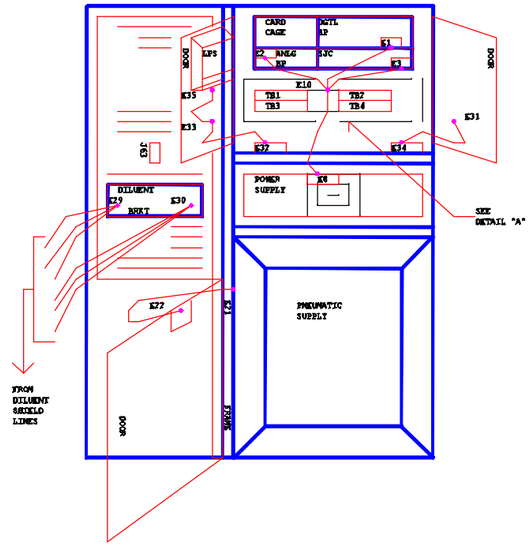

MAXM & HMX LEFT SIDE

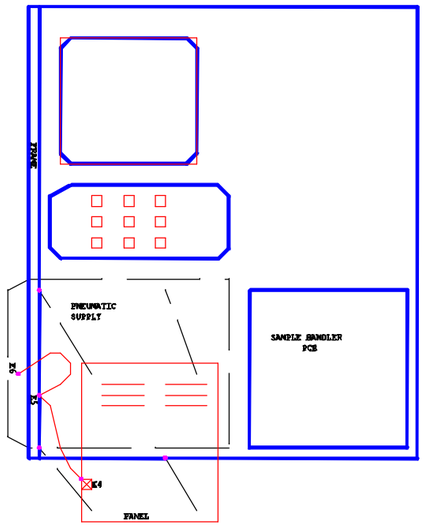

MAXM & HMX RIGHT SIDE

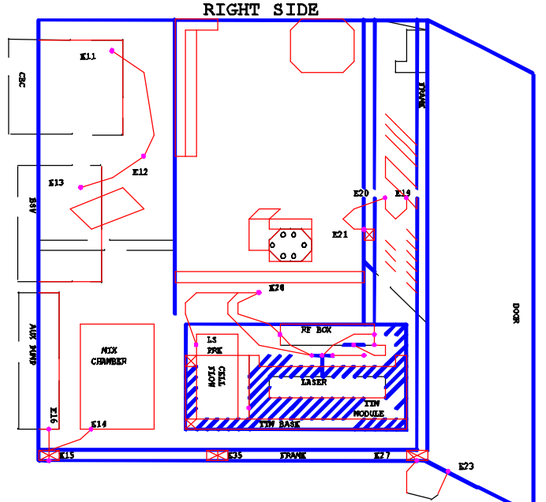

TERMINAL BLOCK MOUNTING PLATE

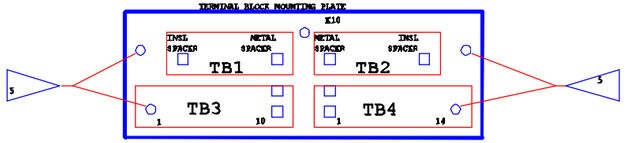

DETAIL "A"

HMX FRONT VIEW

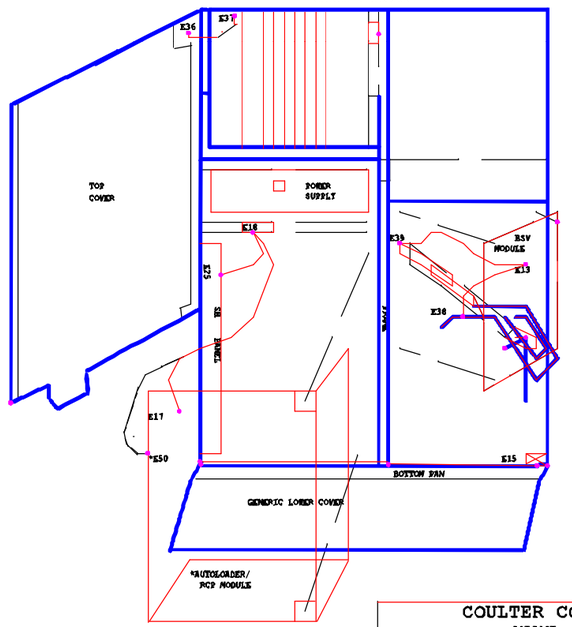

MODULE AND FRAME (E) POINT LOCATIONS

REF	LOCATION	REF	LOCATION	REF	LOCATION
E1	BACK OF CARDCAGE ON DIGITAL BACKPLANE	E17	RCP MODULE	E33	BACK ON LEFT CARD CAGE DOOR
E2	BACK OF CARDCAGE ON ANALOG BACKPLANE	E18	LBS CENTER OF FRAME ON PS FLOOR PANEL	E34	BACK CENTER FRAME
E3	BACK OF CARDCAGE ON SOLENOID JUNCTION BACKPLANE	E19	RBS BACK ON DILUENT FITTINGS BRACKET	E35	BOTTOM OF LASER POWER SUPPLY ON BACK LEFT DOOR
E4	LEFT SIDE - PNEUMATIC SUPPLY PANEL	E20	RBS BACK PANEL BELOW DILUENT FITTINGS BRACKET	E36	VIEWING SCREEN GRID GND ON FRONT PANEL
E5	LEFT SIDE - FRAME PANEL	E21	BACK OF FRAME	E37	FRONT CARD CAGE BRACKET ON CENTER DIVIDER OF FRAME
E6	BACK - PNEUMATIC SUPPLY	E22	BACK BOTTOM OF REAR DOOR	E38	ON BACK OF WHOLE BLOOD LEVER
E7	NOT USED	E23	RBS BOTTOM OF DOOR COVER	E39	ON TRAVELING GUIDE BRACKET OF RSV MODULE
E8	BACK - POWER SUPPLY	E24	LBS FRONT LOWER DOOR HINGE BRACKET (NOT USED IN HMX)	E40	ON FRONT POP OFF PANEL (NOT USED IN HMX)
E9	NOT USED	E25	SAMPLE HANDLER BASE ON PCB PANEL	*E51	AUTOLOADER LOWER FRONT COVER (NOT USED IN HMX)
E10	BACK - ON BUS BAR BRACKET	E26	RBS FRONT LOWER DOOR HINGE BRACKET (NOT USED IN HMX)	*E50	AUTOLOADER FRAME (LBS)
E11	CBC MODULE	E27	RBS REAR FRAME FLOOR	*E52	AUTOLOADER LBS COVER TRIM PANEL (NOT USED IN HMX)
E12	RBS CENTER FRAME DIVIDER	E28	CENTER WALL OF FRAME ABOVE TTN MODULE	*E53	AUTOLOADER BARCODE READER COVER PANEL (NOT USED IN HMX)
E13	RSV MODULE	E29	BACK - ON DILUENT FITTINGS BRACKET	*E54	AUTOLOADER RBS COVER TRIM PANEL (NOT USED IN HMX)
E14	MIX CHAMBER MODULE	E30	BACK - ON DILUENT FITTINGS BRACKET	E55	LBS LOWER FRONT COVER (NOT USED IN HMX)
E15	FRONT RBS CORNER OF FRAME FLOOR	E31	BACK ON RIGHT CARD CAGE DOOR	E56	RBS LOWER FRONT COVER (NOT USED IN HMX)
E16 E16	AUXILLARY MODULE MIX CHAMBER MODULE	E32 E28	BACK CENTER FRAME CENTER WALL OF FRAME ABOVE TTN MODULE	E43	

COULTER CORPORATION
MIAMI, FLORIDA
U.S.A.

Title: INTERCONNECT DIAGRAM MAXM/HMX SYSTEMS

Size	Document Number	REV
D	6320619	H

Date: June 2, 1999 Sheet 10 of 15

PART/ DWG NO.	6320619	REV	SH
		H	11

REVISION

REV	DESCRIPTION	PCN	DATE	BY	CHKR	APPVL
D	REVISED & REDRAWN	0373-512	23OCT91	VN	RFS	RDV
E	REVISED & REDRAWN	0273-675	07AUG92	VN	RFS	RDV
F	REVISED & REDRAWN	98645	07SEP94	VN/OPC	DB	SEVH
G	CHANGED TITLE BLOCK	021350 -013	20JUL96	AOA	AOA	DB
H	ADDED BARCODE RECONFIG CABLE, AREA D5,D8	REFER TO CPDM	E. ANGULO CPDM APPROVAL			

P46-1 +12V
P46-2 -12V
P46-3 GND
P46-4 +5V
P46-5 SYNC
P46-6 MOTOR
P46-7 +DATA
P46-8 -DATA

P45-1
P45-2
P45-3
P45-4
P45-5
P45-6
P45-7
P45-8

P44-1 N.C.
P44-2 N.C.
P44-3 SCI00
P44-4 N.C.
P44-5 SCI01
P44-6 N.C.
P44-7 K8
P44-8 N.C.
P44-9 K10
P44-10 +12V
P44-11 N.C.
P44-12 DIG GND
P44-13 DIG GND
P44-14 K12
P44-15 N.C.
P44-16 N.C.
P44-17 N.C.
P44-18 N.C.
P44-19 K14
P44-20 N.C.
P44-21 K17
P44-22 N.C.
P44-23 N.C.
P44-24 +5V
P44-25 -12V
P44-26 N.C.

P43-1
P43-2
P43-3
P43-4
P43-5
P43-6
P43-7
P43-8
P43-9
P43-10
P43-11
P43-12
P43-13
P43-14
P43-15
P43-16
P43-17
P43-18
P43-19
P43-20
P43-21
P43-22
P43-23
P43-24
P43-25
P43-26

BARCODE RECONFIGURE CABLE
J8: 2 GRN, 3 RED, 5 BLK

BARCODE DECODER MODULE
P44 P6
P8 J8
J7
P6
P5 N/A
J1 P45

P22
P33-1 OPTO RESET GND BLK P22-6
P33-2 RS422 CTS+ WHT/GRA P22-8
P33-3 RS422 RTS+ WHT/BLK P22-20
P33-4 RS422 TXD+ WHT P22-9
P33-5 RS422 TXD- WHT/BLK P22-10
P33-6 RS422 (OPTO RESET) WHT/VIO P22-17
P33-7 RS422 RXD- WHT/GRA P22-18
P33-8 RS422 RXD+ WHT P22-19
P33-9 RS422 RTS- WHT P22-7
P33-10 RS422 CTS- WHT/RED P22-21

P2-1 ANLG GND BLK TB1-9
P2-2 N.C.
P2-3 +5V YEL TB4-A3
P2-4 +15V GRN TB3-A7
P2-5 -15V GRN TB3-A3
P2-6 DGTL GND BLK TB2-10

P3-1 +12V BLU TB3-A9
P3-2 R.N. GND BLK TB2-10
P3-3 N.C.
P3-4 N.C.
P3-5 +7.6V RED TB4-A8
P3-6 R.N. GND BLK TB2-10

AUTOLOADER MODULE (@SHEET 12)
BAR CODE SCANNER P46 J46
HOUSING INTERFACE PCB
J1 J2 J3 J4 J5 J6 J7 J9
P45 J9
SOL #2 PIERCE J11
SOL #3 TUBE RAM J10
J12 J13 J14 J15 J16 J17 J18 J19
J20
J31 ROCKER BED INTERFACE PCB
J33 J34 J32 J35 J37 J38 J39 J40 J41 J42 J43 J44
SOL #4 BED LOCK
SOL #1 TUBE RETURN

P16-1 GND P15-1
P16-2 VCC P15-2
P16-3 GND P15-3
P16-4 VCC P15-4
P16-5 GND P15-5
P16-6 VCC P15-6
P16-7 SW-0 P15-7
P16-8 SW-9 P15-8
P16-9 SW-1 P15-9
P16-10 SW-10 P15-10
P16-11 SW-2 P15-11
P16-12 SW-11 P15-12
P16-13 SW-3 P15-13
P16-14 SW-12 P15-14
P16-15 SW-4 P15-15
P16-16 SW-13 P15-16
P16-17 SW-5 P15-17
P16-18 SW-14 P15-18
P16-19 SW-6 P15-19
P16-20 SW-15 P15-20
P16-21 SW-7 P15-21
P16-22 SW-16 P15-22
P16-23 SW-8 P15-23
P16-24 SW-17 P15-24
P16-25 SW-18 P15-25
P16-26 SW-18 P15-26
P16-27 LED1 GRN P15-27
P16-28 LED2 RED P15-28
P16-29 STEP1-0 P15-29
P16-30 STEP1-1 P15-30
P16-31 STEP1-2 P15-31
P16-32 STEP1-3 P15-32
P16-33 STEP2-0 P15-33
P16-34 STEP2-1 P15-34
P16-35 STEP2-2 P15-35
P16-36 STEP2-3 P15-36
P16-37 +24V P15-37
P16-38 DOWN1 - P15-38
P16-39 DOWN1 + P15-39
P16-40 DOWN2 P15-40
P16-41 H.N. GND P15-41
P16-42 H.N. GND P15-42
P16-43 SOL1 P15-43
P16-44 +24V P15-44
P16-45 SOL24 P15-45
P16-46 +24V P15-46
P16-47 SOL23 P15-47
P16-48 +24V P15-48
P16-49 SOL4 P15-49
P16-50 +24V P15-50

TELEPHONE CABLE
FRONT BLOOD DETECTOR
TELEPHONE CABLE
REAR BLOOD DETECTOR
P49 J13 P50 J14
J5 P43
HDR CABLE
P15 J15
SAMPLE HANDLER 2
J1 P33
J2 P2
J3 P3

COULTER CORPORATION
MIAMI, FLORIDA
U.S.A.

Title: INTERCONNECT DIAGRAM MAXM/HMX SYSTEMS

Size	Document Number	REV
D	6320619	H

Date: June 2, 1999 Sheet: 11 of 15

AUTOLOADER MODULE

PART/ DRG NO.	REV	SH
6320619	H	12

REVISION

REV	DESCRIPTION	PCN	DATE	BY	CHKR	APPVL
D	REVISED & REDRAWN	0373-512	23OCT91	VN	RFS	RDV
E	REVISED & REDRAWN	0273-675	07AUG92	VN	RFS	RDV
F	REVISED & REDRAWN	98645	07SEP94	VN/OPC	DB	SEVH
G	CHANGED TITLE BLOCK	27350-813	20JUL98	AOA	AOA	DB
H	ADDED P74, J1. ADDED FLAG 9.	REFER TO CPDM	E. ANGULO CPDM APPROVAL			

UNLOAD STACK FULL IR SW-11

TUBE RAM SW-10 LED ON-HOME D1 LED

LOAD STACK EMPTY IR SW-15

SPARE J1 P1 | P2 J2 | P3 J3 | P4 J4

J5 P5 | J6 P6 | J7 SOL#5 SPARE | J8 SOL#6 SPARE

TUBE RETURN SOL #1 (LV81)

BED LOCK SOL #4 (LV84)

HOUSING INTERFACE PCB

P16 J9

P16 FROM SAMPLE HANDLER 2 (SHEET 11)

PIERCE POSITION IR SW-16 — P12 J12

HORIZONTAL POSITION IR SW-17 — P13 J13

NEEDLE HOME IR SW-0 — P14 J14

NEEDLE FRWD IR SW-1 — P15 J15

TUBE FORWARD IR SW-14 — P16 J16

P11 J11 — SOLENOID 2 PIERCE NEEDLE (LV82)

P10 J10 — SOLENOID 3 TUBE RAM (LV83)

J20 P20 | J17 P17 | J18 P18 | J19 P19

M1 MOTOR SERVO — BED MOTOR

DOOR INTERLOCK SW-5

P74 J1 — STOP SW-4 — ON MAXM FRONT PANEL. ON HMX SIGN-SW LEDS BOARD, TOP COVER.

P26-1 DGTL GND — P31-1
P26-2 +5V — P31-2
P26-3 DGTL GND — P31-3
P26-4 +5V — P31-4
P26-5 DGTL GND — P31-5
P26-6 SWITCH13 — P31-6
P26-7 SWITCH9 — P31-7
P26-8 SWITCH12 — P31-8
P26-9 SWITCH6 — P31-9
P26-10 SWITCH3 — P31-10
P26-11 SWITCH7 — P31-11
P26-12 SWITCH2 — P31-12
P26-13 SWITCH6 — P31-13
P26-14 R10 +5V PULL UP (150 OHM) — P31-14
P26-15 R13 +5V PULL UP (150 OHM) — P31-15
P26-16 R14 +5V PULL UP (150 OHM) — P31-16
P26-17 R16 +5V PULL UP (150 OHM) — P31-17
P26-18 STEP2-3 — P31-18
P26-19 STEP1-0 — P31-19
P26-20 STEP2-2 — P31-20
P26-21 STEP1-1 — P31-21
P26-22 STEP2-1 — P31-22
P26-23 STEP1-2 — P31-23
P26-24 STEP2-0 — P31-24
P26-25 STEP1-3 — P31-25
P26-26 DOWTR2 — P31-26
P26-27 +24V — P31-27
P26-28 SOL4 — P31-28
P26-29 +24V — P31-29
P26-30 CBA8818 GND — P31-30

P31 J31

B1 MOTOR STEPPER — LOWER PLATFORM — STEP1-3 STEP1-2 STEP1-1 STEP1-0 — P33 J33

B2 MOTOR STEPPER — LIFT PLATFORM — STEP2-3 STEP2-2 STEP2-1 STEP2-0 — P32 J32

ROCKER BED INTERFACE PCB

M2 MOTOR SERVO — CASSETTE INDEX MOTOR — J34 P34 — +24V, N.C., DOWTR2

LOWER ELEVATOR DOWN IR SW-9 — P35 J35

CASSETTE POSITION 0 IR SW-12 — P38 J38

CASSETTE POSITION 1 IR SW-2 — P41 J41

FULL CASSETTE INDEX ROTATION IR SW-9 — P39 J39

TUBE AVAILABLE IR SW-7 — P42 J42

J37 P37 — UNLOAD ELEVATOR DOWN IR SW-6

J40 P40 — CASSETTE POSITION 2 IR SW-3

J43 P43 — CASSETTE POSITION 3 IR SW-13

BAR CODE SCANNER — J46 P45 — FROM BARCODE DECODER (SHEET 11) P45

COULTER CORPORATION
MIAMI, FLORIDA
U.S.A.

Title: INTERCONNECT DIAGRAM MAXM/HMX SYSTEMS

Size	Document Number	REV
D	6320619	H

Date: June 2, 1999 — Sheet 12 of 15

PART/ DWG NO.	6320619	REV	SH
		H	13

REVISION

REV	DESCRIPTION	PCN	DATE	BY	CHKR	APPVL
D	REVISED & REDRAWN	0373-512	23OCT91	VN	RFS	RDV
E	REVISED & REDRAWN	0273-675	07AUG92	VN	RFS	RDV
F	REVISED & REDRAWN	00645	07SEP94	VN/OPC	DB	SEVH
G	REVISED & REDRAWN	027350 -013	20JUL98	AOA	AOA	DB
H	ADDED PENTIUM 100 COMPUTER	REFER TO CPDM	E. ANGULO CPDM APPROVAL			

(ENGLISH)

486 DMS COMPUTERS
AND
PENTIUM 100 COMPUTER

NEC POWERMATE 486

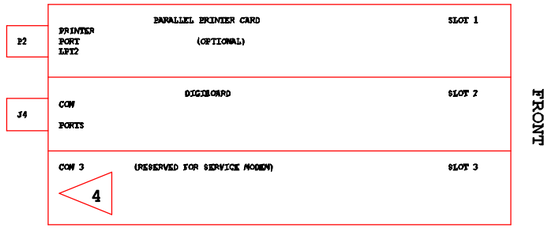

LEFT SIDE VIEW

(COVER REMOVED)

INTEL CLASSIC R 486
AND CLASSIC R+ 486

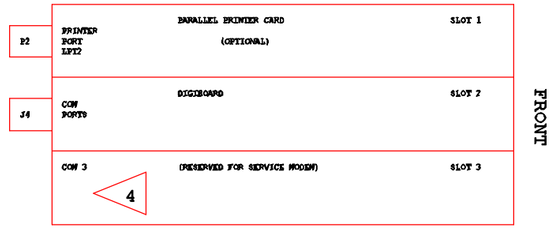

LEFT SIDE VIEW

(COVER REMOVED)

TOP VIEW

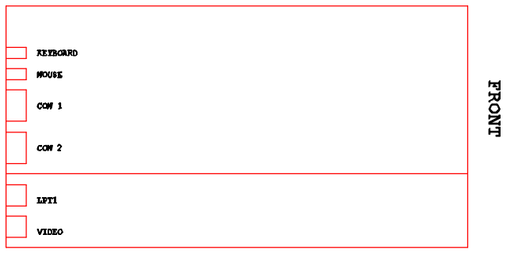

TOP VIEW

CARD SLOTS SHOWN WITH COMPUTER COVER REMOVED

PENTIUM 100 COMPUTER

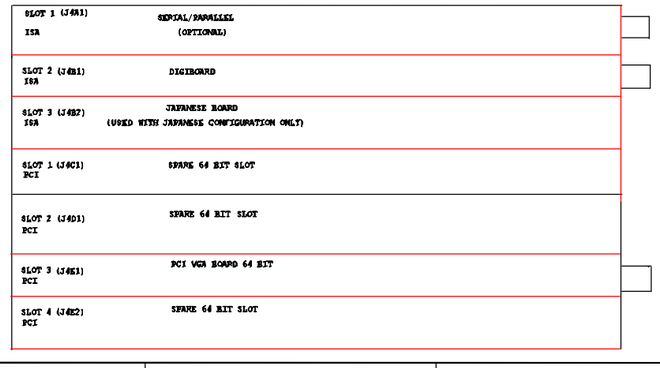

REAR

COULTER CORPORATION
MIAMI, FLORIDA
U.S.A.

Title: INTERCONNECT DIAGRAM MAXM/HMX SYSTEMS

Size	Document Number	REV
D	6320619	H
Date: June 2, 1999	Sheet 13 of 15	

PART/ DWG NO.	6320619	REV	SH
		H	14

REVISION

REV	DESCRIPTION	PCN	DATE	BY	CHKR	APPVL
D	REVISED & REDRAWN	0373-512	23OCT91	VN	RFS	RDV
E	REVISED & REDRAWN	0273-675	07AUG92	VN	RFS	RDV
F	REVISED & REDRAWN	98645	07SEP94	VN/OPC	DB	SEVH
G	REVISED & REDRAWN	023350	20JUL98	AOA	AOA	DB
H	ADDED PENTIUM 100 COMPUTER	REFER TO CPDM	E. ANGULO CPDM APPROVAL			

(JAPANESE)

486 DMS COMPUTERS AND PENTIUM 100 COMPUTER

NEC POWERMATE 486

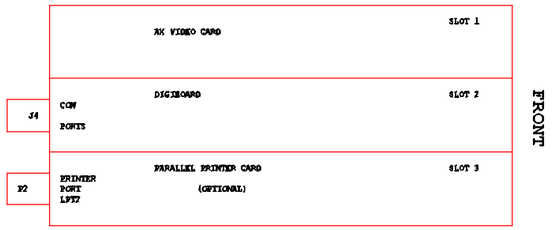

LEFT SIDE VIEW

(COVER REMOVED)

INTEL CLASSIC R 486 AND CLASSIC R+ 486

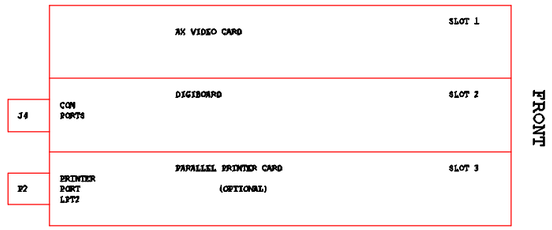

LEFT SIDE VIEW

(COVER REMOVED)

TOP VIEW

TOP VIEW

CARD SLOTS SHOWN WITH COMPUTER COVER REMOVED

PENTIUM 100 COMPUTER

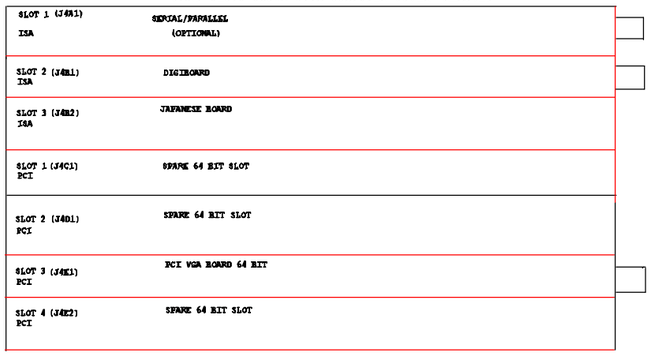

REAR

COULTER CORPORATION
MIAMI, FLORIDA
U.S.A.

Title: INTERCONNECT DIAGRAM MAXM/HMX SYSTEMS

Size	Document Number	REV
D	6320619	H

Date: June 2, 1999 Sheet 14 of 15

PART/ DWG NO.	6320619	REV	H	SH	15

REVISION

REV	DESCRIPTION	PCN	DATE	BY	CHKR	APPVL
D	REVISED & REDRAWN	0373-512	23OCT91	VN	RFS	RDV
E	REVISED & REDRAWN	0273-675	07AUG92	VN	RFS	RDV
F	REVISED & REDRAWN	88645	07SEP94	VN/PC	DB	SEVH
G	REVISED & REDRAWN	027350 -013	20JUL98	AOA	AOA	DB
H	ADDED PENTIUM 100 COMPUTER	REFER TO CPDM	E. ANGULO CPDM APPROVAL			

(JAPANESE)
DMS COMPUTERS

KEYBOARD ASSEMBLY

MAXM COMPUTER

COM1 | COM2 | KEYBOARD

VIDEO | AUX POWER | PRINTER LPT1 | P2

3

SLOT 1 — AK VIDEO CARD
SLOT 2 — SPARE SLOT
SLOT 3 — DIGIBOARD — COM PORTS — J6
SLOT 4 — PARALLEL PRINTER CARD — PRINTER PORT LPT2 — P2

XB7

DIGIBOARD BREAKOUT BOX AND CABLE — P1 MAXM (FROM SET 5); P2 OPTION 1 TICKET PRINTER; P3 HOST COMPUTER; P4 WAND BARCODE READER, WAND BARCODE INTERFACE

2

VIDEO DISPLAY

P1 — JAPANESE GRAPHICS PRINTER

3

JAPANESE GRAPHICS PRINTER (OPTIONAL) — P1

(OPTIONAL)
P1 GRAPHICS PRINTER

PENTIUM
100 MHZ
DMS
COMPUTER

KEYBOARD ASSEMBLY

HMX COMPUTER

COM1 | COM2 | KEYBOARD

PRINTER LPT1 | AUX POWER

3

CARD SLOTS SHOWN WITH COMPUTER COVER REMOVED

SLOT 1 (J4A1) ISA — SERIAL/PARALLEL (OPTIONAL)
SLOT 2 (J4B1) ISA — DIGIBOARD
SLOT 3 (J4B2) ISA — JAPANESE BOARD
SLOT 1 (J4C1) PCI — SPARE 64 BIT SLOT
SLOT 2 (J4D1) PCI — SPARE 64 BIT SLOT
SLOT 3 (J4E1) PCI — PCI VGA BOARD 64 BIT
SLOT 4 (J4E2) PCI — SPARE 64 BIT SLOT

(OPTIONAL)

XB7

DIGIBOARD BREAKOUT BOX AND CABLE — P1 HMX (FROM SET 5); P2; P3 HOST COMPUTER; P4

2

GRAPHICS PRINTER

LCD VIDEO DISPLAY

COULTER CORPORATION
MIAMI, FLORIDA
U.S.A.

Title: INTERCONNECT DIAGRAM MAXM/HMX SYSTEMS

Size	Document Number	REV
D	6320619	H

Date: June 2, 1999 — Sheet 15 of 15

COMPONENT RERERENCE DESIGNATIONS	
LAST USED	NOT USED
T1	F1 thru F9
F10	
TB1	
C1	
B2	

PART/ DWG NO. 6320683 REV A SH 1

REVISION						
REV	DESCRIPTION	PCN	DATE	BY	CHKR	APPVL
A	RELEASED	0273-371	31MAY91			

120 VAC CONFIGURATION

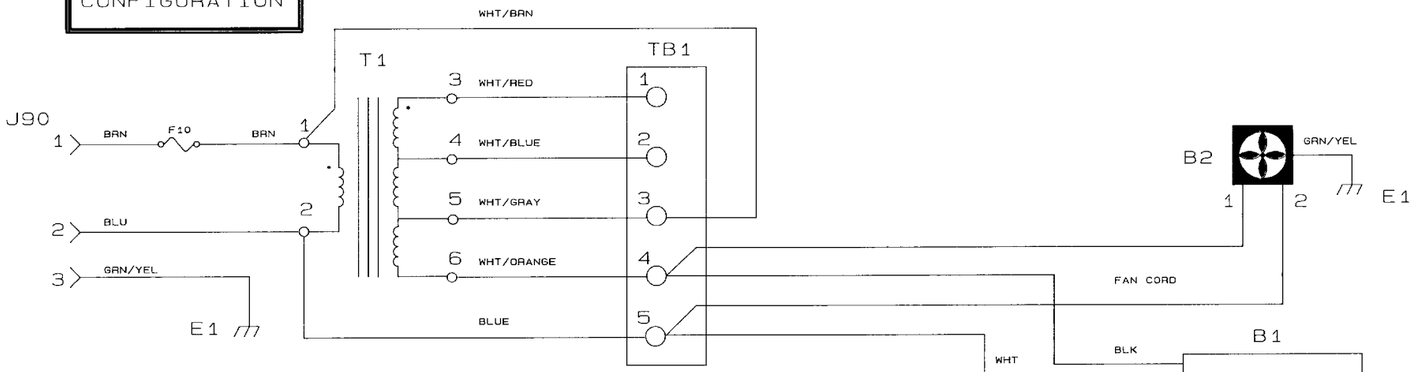

100 VAC CONFIGURATION

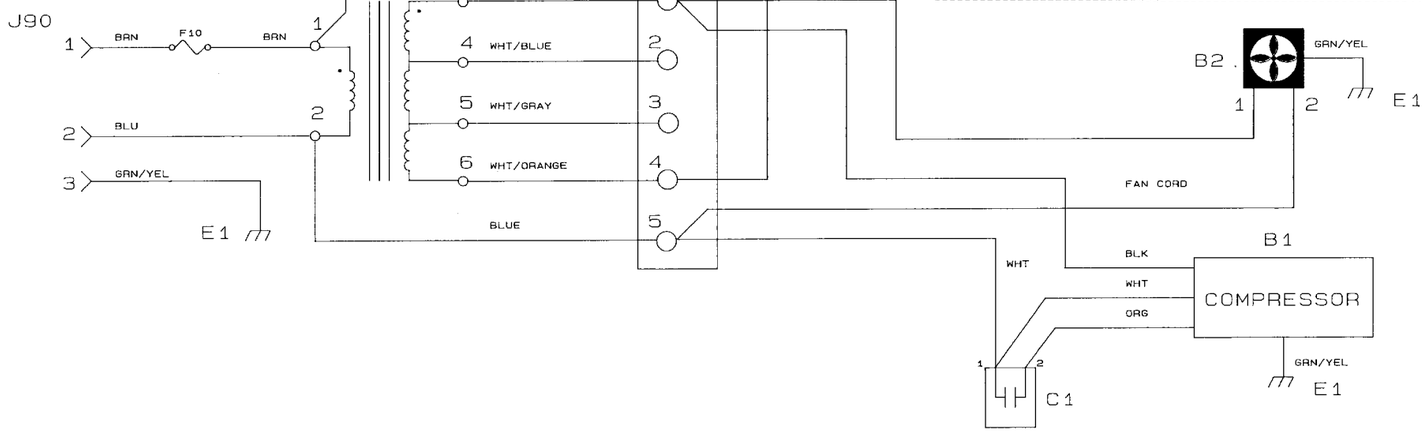

ENGINEERING FILE CONTROL	
SHEET	FILE NAME
1 2 3 4 5	PNEU-PS.SCH

REVISION STATUS OF SHEETS										
SHEET	1									
REV	A									

THIS DRAWING AND/OR SPECIFICATION IS THE PROPERTY OF COULTER ELECTRONICS, INC., IS ISSUED IN STRICT CONFIDENCE, AND SHALL NOT BE REPRODUCED, COPIED, OR USED AS THE BASIS FOR THE MANUFACTURE OR SALE OF APPARATUS, WITHOUT PRIOR WRITTEN PERMISSION.

NEXT ASSY	MODEL
Used On	0273

	SIGNATURE	DATE
DRAWN	M. Gonzalez	11APRIL91
CHKR	[illegible]	28MAR91
M.E.	[illegible]	11APRIL91
E.E.	M. Gonzalez	11APRIL91
PROJ APPVL	[illegible]	11APR91
CLASS CODE		

COULTER ELECTRONICS INC.
HIALEAH, FLORIDA
U. S. A.

Title: PNEUMATIC POWER SUPPLY 100/120 VAC

Size	Document Number	REV
D	6320683	A

Date: March 18, 1991 Sheet 1 of 1

COMPONENT RERERENCE DESIGNATIONS	
LAST USED	NOT USED
T1	F1 thru F9
F10	
TB1	
C1	
B2	

PART/DWG NO. 6320682 REV A SH 1

REVISION						
REV	DESCRIPTION	PCN	DATE	BY	CHKR	APPVL
A	RELEASED	0273-371	31MAY91	[illegible]	[illegible]	[illegible]

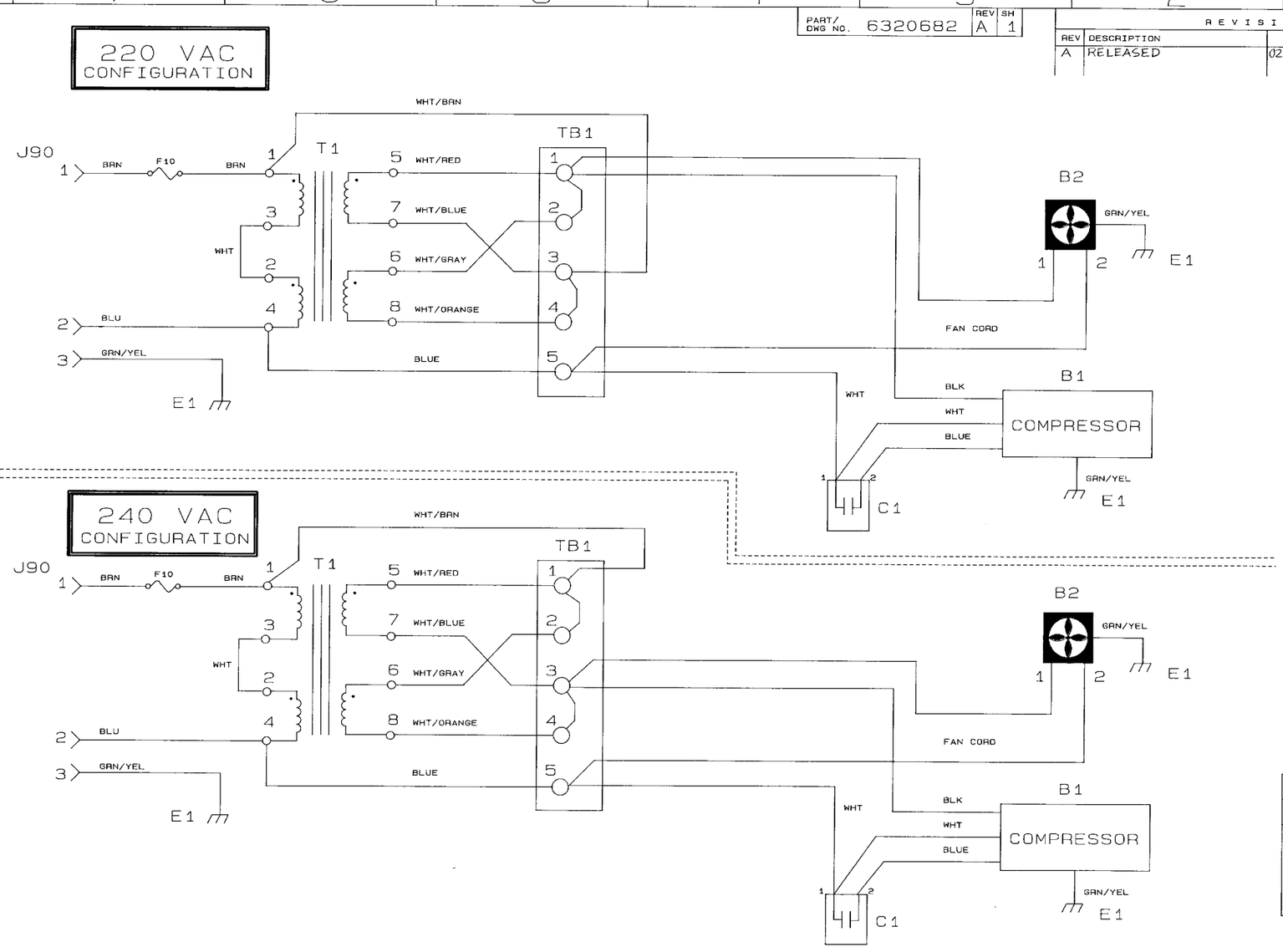

ENGINEERING FILE CONTROL	
SHEET	FILE NAME
1 2 3 4 5	2PNE-PS.SCH

REVISION STATUS OF SHEETS		
	SHEET	1
	REV	A

NEXT ASSY	MODEL
	0273

Used On

	SIGNATURE	DATE
DRAWN	[illegible]	11 APRIL 91
CHKR	[illegible]	28 MAR 91
M.E.D	[illegible]	11 APRIL 91
E.E.	[illegible]	11 APRIL 91
PROJ. APPV	[illegible]	11 APR 91
CLASS CODE		

COULTER ELECTRONICS INC.
HIALEAH, FLORIDA
U. S. A.

Title: PNEUMATIC POWER SUPPLY 220/240 VAC

Size: D | Document Number: 6320682 | REV: A

Date: March 17, 1991 | Sheet 1 of 1

THIS DRAWING AND/OR SPECIFICATION IS THE PROPERTY OF COULTER ELECTRONICS, INC. IS ISSUED IN STRICT CONFIDENCE, AND SHALL NOT BE REPRODUCED, COPIED, OR USED AS THE BASIS FOR THE MANUFACTURE OR SALE OF APPARATUS, WITHOUT PRIOR WRITTEN PERMISSION.

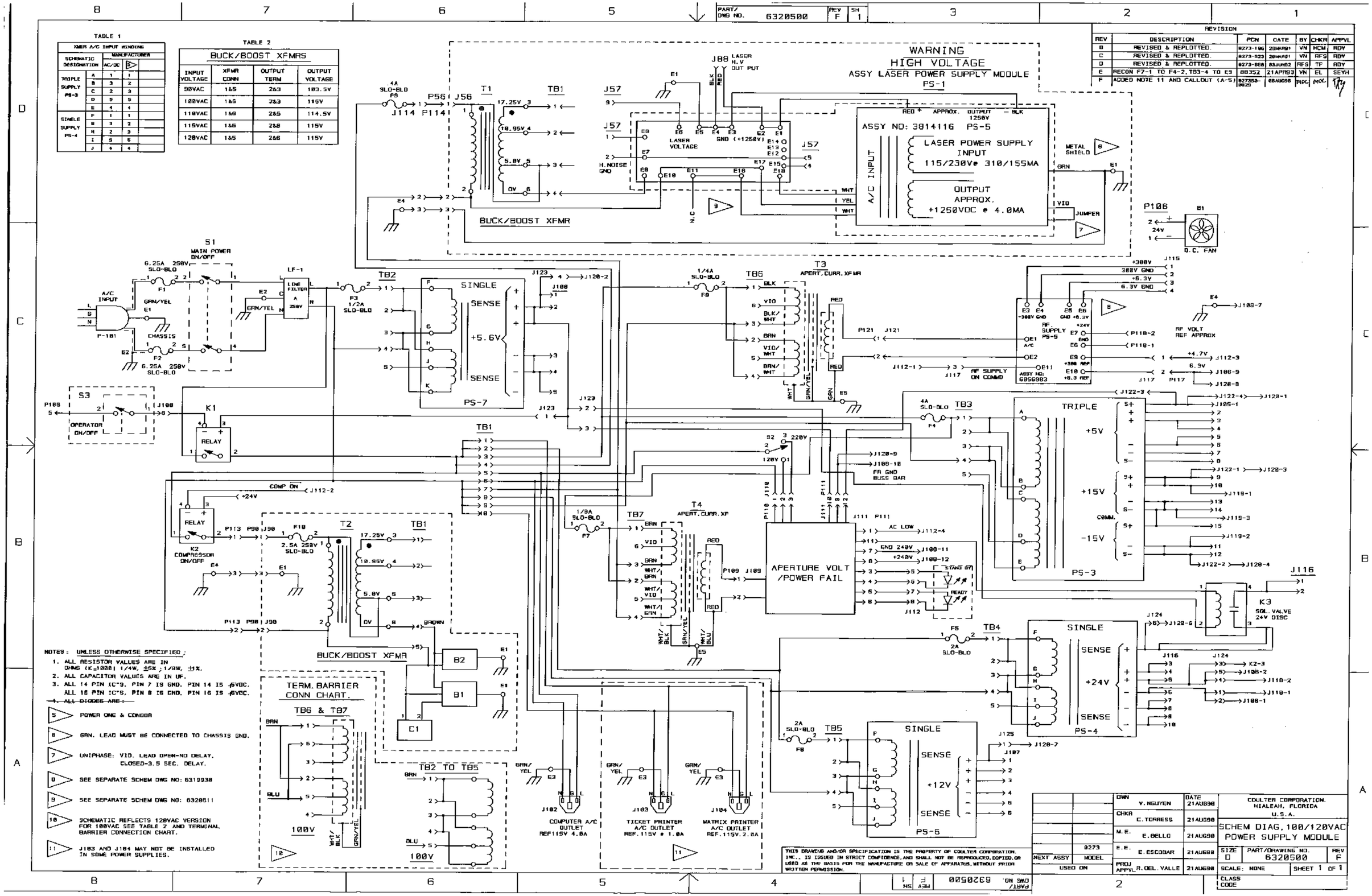

TABLE 1

SCHEMATIC DESIGNATION		MANUFACTURER AC/DC	MANUFACTURER 5
TRIPLE SUPPLY PS-3	A	1	1
	B	3	2
	C	2	3
	D	5	5
	E	4	4
SINGLE SUPPLY PS-4	F	1	1
	G	3	2
	H	2	3
	I	5	6
	J	4	4

TABLE 2

BUCK/BOOST XFMRS

INPUT VOLTAGE	XFMR CONN	OUTPUT TERM	OUTPUT VOLTAGE
90VAC	1&5	2&3	103.5V
100VAC	1&6	2&3	115V
110VAC	1&6	2&5	114.5V
115VAC	1&6	2&8	115V
120VAC	1&5	2&6	115V

REVISION

REV	DESCRIPTION	PCN	DATE	BY	CHKR	APPVL
B	REVISED & REPLOTTED.	0273-196	28MAR91	VN	HCM	RDY
C	REVISED & REPLOTTED.	0273-823	28MAR91	VN	RFS	RDY
D	REVISED & REPLOTTED.	0273-888	03JUN92	RFS	TF	RDY
E	RECON F7-1 TO F4-2, TB3-4 TO E9	88352	21APR93	VN	EL	SEYH
F	ADDED NOTE 11 AND CALLOUT (A-5)	027358-0029	08AUG98	MDC	MDC	[illegible]

NOTES: UNLESS OTHERWISE SPECIFIED;

1. ALL RESISTOR VALUES ARE IN OHMS (K=1000) 1/4W, ±5%; 1/8W, ±1%.
2. ALL CAPACITOR VALUES ARE IN UF.
3. ALL 14 PIN IC'S, PIN 7 IS GND, PIN 14 IS +5VDC. ALL 16 PIN IC'S, PIN 8 IS GND, PIN 16 IS +5VDC.
4. ~~ALL DIODES ARE:~~

5 POWER ONE & CONDOR

6 GRN. LEAD MUST BE CONNECTED TO CHASSIS GND.

7 UNIPHASE: VID. LEAD OPEN-NO DELAY, CLOSED-3.5 SEC. DELAY.

8 SEE SEPARATE SCHEM DWG NO: 6319938

9 SEE SEPARATE SCHEM DWG NO: 6320811

10 SCHEMATIC REFLECTS 120VAC VERSION FOR 100VAC SEE TABLE 2 AND TERMINAL BARRIER CONNECTION CHART.

11 J103 AND J104 MAY NOT BE INSTALLED IN SOME POWER SUPPLIES.

THIS DRAWING AND/OR SPECIFICATION IS THE PROPERTY OF COULTER CORPORATION, INC., IS ISSUED IN STRICT CONFIDENCE, AND SHALL NOT BE REPRODUCED, COPIED, OR USED AS THE BASIS FOR THE MANUFACTURE OR SALE OF APPARATUS, WITHOUT PRIOR WRITTEN PERMISSION.

DWN	V. NGUYEN	DATE	21AUG90
CHKR	C. TORRESS		21AUG90
M.E.	E. BELLO		21AUG90
E.E.	E. ESCOBAR		21AUG90
PROJ APPVL	R. DEL VALLE		21AUG90

NEXT ASSY 0273 MODEL
USED ON

COULTER CORPORATION, HIALEAH, FLORIDA U.S.A.

SCHEM DIAG. 100/120VAC POWER SUPPLY MODULE

SIZE D PART/DRAWING NO. 6320500 REV F
SCALE: NONE SHEET 1 OF 1
CLASS CODE

8	7	6	5	PART/ DWG NO. 6320750	REV E	SH 1	3	2	1

REVISION						
REV	DESCRIPTION	PCN	DATE	BY	CHK'R	APPVL
A	RELEASED	0273-382	14JUN91	ENB	LS	RDV
B	REVISED & REPLOTTED	0273-923	13NOV91	VN	RFS	RDV
C	RECON F7-1 TO F4-1	88352	21APR93	VN	RFS	SEVN
D	F9 WAS .2A (D-88	0273-711	05OCT93	VN	RFS	SEVN
E	ADDED NOTE 11 AND CALOUT (A-5)	827358-0029	08AUG96			

TABLE 1

XMER A/C INPUT WINDING				
SCHEMATIC DESIGNATION		MANUFACTURER AC/DC		
TRIPLE SUPPLY PS-3	A	1	1	
	B	3	2	
	C	2	3	
	D	5	5	
	E	4	4	
SINGLE SUPPLY PS-4	F	1	1	
	G	3	2	
	H	2	3	
	I	6	5	
	J	4	4	

TABLE 2

BUCK/BOOST XFMRS			
INPUT VOLTAGE	XFMR CONN	OUTPUT TERM	OUTPUT VOLTAGE
228V	S&6-7&8-1&8	4&5	231.5VAC
240V	S&6-7&8-1&5	4&8	220.1VAC
230V	1&8	4&8	230VAC

WARNING
HIGH VOLTAGE
ASSY LASER POWER SUPPLY MODULE
PS-1

ASSY NO: 3814116 PS-5
LASER POWER SUPPLY INPUT 115/230Ve 310/155MA
OUTPUT APPROX. +1250VDC @ 4.0MA
A/C INPUT
RED + APPROX. OUTPUT 1250V — BLK

J88 LASER H.V OUT PUT
LASER VOLTAGE
GND (+1250V)
H. NOISE GND

BUCK/BOOST XFMR

S1 MAIN POWER ON/OFF
3.2A 250V SLO-BLO F1
3.2A 250V SLO-BLO F2
A/C INPUT
P-101
CHASSIS
LF-1 LINE FILTER
F3 1/4A SLO-BLO

TB2
SINGLE SENSE +5.6V SENSE
PS-7

S3 OPERATOR ON/OFF
K1 RELAY

TB1

COMP ON
K2 COMPRESSOR ON/OFF
F10 1.5A 250V SLO-BLO
T2
BUCK/BOOST XFMR
B2
B1
C1

TERM. BARRIER CONN CHART.
T86 & T87
240V

TB2 TO TB5
240V

NOTES: UNLESS OTHERWISE SPECIFIED:
1. ALL RESISTOR VALUES ARE IN OHMS (K=1000) 1/4W, ±5% ; 1/8W, ±1%.
2. ALL CAPACITOR VALUES ARE IN UF.
3. ALL 14 PIN IC'S, PIN 7 IS GND, PIN 14 IS +5VDC.
   ALL 16 PIN IC'S, PIN 8 IS GND, PIN 16 IS +5VDC.
4. ALL DIODES ARE 1N4004.

5 POWER ONE & CONDOR
6 GRN. LEAD MUST BE CONNECTED TO CHASSIS GND.
7 UNIPHASE: VIO. LEAD OPEN=NO DELAY, CLOSED=3.5 SEC. DELAY.
8 SEE SEPARATE SCHEM DWG NO: 6319938
9 SEE SEPARATE SCHEM DWG NO: 6328812
10 SCHEMATIC REFLECTS 220VAC VERSION FOR 240VAC SEE TABLE 2 AND TERMINAL BARRIER CONNECTION CHART.
11 J183 AND J184 MAY NOT BE INSTALLED IN SOME POWER SUPPLIES.

T3 APERT. CURR. XFMR
TB6
1/8A SLO-BLO F8
P121 J121
J112-1 J117 RF SUPPLY ON COMMD
RF SUPPLY PS-5
RF VOLT REF APPROX
+4.7V J112-3
6.3V J188-8

T4 APERT. CURR. XF
TB7
1/16A SLO-BLO F7
APERTURE VOLT /POWER FAIL
AC LOW J112-4
GND 240V J188-11
+240V J188-12
STAND BY
READY
J112

TB3
2A SLO-BLO F4
TRIPLE
+5V
+15V
COMM.
-15V
PS-3
FR GND BUSS BAR

TB4
1A SLO-BLO F5
SINGLE SENSE +24V SENSE
PS-4
K3 SOL. VALVE 24V DISC

TB5
1A SLO-BLO F6
SINGLE SENSE +12V SENSE
PS-6

J182 COMPUTER A/C OUTLET REF.230V 2.0A
J183 TICKET PRINTER A/C OUTLET REF.230V 0.5A
J184 MATRIX PRINTER A/C OUTLET REF.230V 1.0A

P106 B1 D.C. FAN 24V

THIS DRAWING AND/OR SPECIFICATION IS THE PROPERTY OF COULTER CORPORATION, INC., IS ISSUED IN STRICT CONFIDENCE, AND SHALL NOT BE REPRODUCED, COPIED, OR USED AS THE BASIS FOR THE MANUFACTURE OR SALE OF APPARATUS, WITHOUT PRIOR WRITTEN PERMISSION.

		DWN E.GOMEZ	DATE 08MAR91
		CHK'R H.M.CATHY	08MAR91
		M.E. E.BELLO	12MAR91
6804432	0273	E.E. E.ESCOBAR	11MAR91
NEXT ASSY	MODEL	PROJ APPVL R.DEL VALLE	12MAR91
USED ON			

COULTER CORPORATION, HIALEAH, FLORIDA U.S.A.

SCHEM DIAG, 220/240VAC POWER SUPPLY MODULE

SIZE	PART/DRAWING NO.	REV
D	6320750	E

SCALE: NONE SHEET 1 OF 1

CLASS CODE

7 **TROUBLESHOOTING, 7.1-1**

7.1 ERROR MESSAGES, 7.1-1

7.2 FLOW-CELL ERRORS FC, PC1, AND PC2, 7.2-1

7.3 DC, RF, OR LS NOISE PROBLEMS, 7.3-1
Purpose, 7.3-1
Tools/Supplies Needed, 7.3-1
DC Noise Troubleshooting Checks, 7.3-1
RF Noise Troubleshooting Checks, 7.3-2
LS Noise Troubleshooting Checks, 7.3-7

7.4 DC, RF, OR LS LATEX CALIBRATION PROBLEMS, 7.4-1

7.5 REPORTED INSTRUMENT PROBLEMS AND SOLUTIONS, 7.5-1

ILLUSTRATIONS

7.3-1 Acceptable DC Noise Display, 7.3-1
7.3-2 Unacceptable DC Noise Display, 7.3-1
7.3-3 Acceptable Static RF Noise Display, 7.3-2
7.3-4 Unacceptable Static RF Noise Display, 7.3-2
7.3-5 Acceptable Dynamic RF Noise, 7.3-3
7.3-6 RF 60 Hz, 7.3-4
7.3-7 RF 60 Hz with Noise Spikes, 7.3-4
7.3-8 Normal RF Random Baseline Bounce, 7.3-4
7.3-9 RF Output with bubble Trapped in Sheath 2, 7.3-5
7.3-10 Normal RF Baseline While Cycling Diluent, 7.3-5
7.3-11 Noisy RF Baseline While Cycling Diluent, 7.3-5
7.3-12 Noisy RF Baseline While Cycling Diluent (RF Noise >100 mV), 7.3-6
7.3-13 LATRON Control Sample with a Good RF Tube and Box, 7.3-6
7.3-14 LATRON Control Sample with a Bad RF Tube and Box, 7.3-6
7.3-15 RF Output Running LATRON Control (Leak at QD7), 7.3-7
7.3-16 LATRON Control Run with DC Gain Drop, 7.3-7
7.3-17 Acceptable Static LS Noise Display, 7.3-8
7.3-18 Unacceptable Static LS Noise Display, 7.3-8
7.3-19 Acceptable Dynamic LS Noise Display, 7.3-9

TABLES

7.1-1 System Error Messages - Symbols and Numbers, 7.1-1
7.1-2 System Error Messages - A and B, 7.1-5
7.1-3 System Error Messages - C, 7.1-6
7.1-4 System Error Messages - D through H, 7.1-12
7.1-5 System Error Messages - I, 7.1-15
7.1-6 System Error Messages - J through P, 7.1-18
7.1-7 System Error Messages - R, 7.1-21
7.1-8 System Error Messages - S, 7.1-23
7.1-9 System Error Messages - T, 7.1-26
7.1-10 System Error Messages - U, 7.1-27
7.1-11 System Error Messages - V through Z, 7.1-29
7.1-12 Internal Instrument Codes, 7.1-30

7.2-1 Flow-Cell Errors, 7.2-1

7.3-1 RF Troubleshooting Table, 7.3-3

7.4-1 RF, DC, or LS Latex Calibration Troubleshooting Table, 7.4-1

7.5-1 Troubleshooting Reported Instrument Problems, 7.5-1

7.1 ERROR MESSAGES

Tables 7.1-1 through 7.1-11 list the error messages displayed on the DMS for the Analyzer module, the Sample Handler, and the DMS, in alphabetic order. These tables also list the action message displayed, when applicable, and the probable causes and corrective actions for the error.

The error messages are listed in the instrument's Error File. Press Ctrl+F2 to access the Error File. It contains up to 100 error messages. When the Error File contains more than 100 messages, it overwrites the oldest message as a new message is posted. Use as needed for troubleshooting.

All the error messages are referenced in the index.

Table 7.1-1 System Error Messages - Symbols and Numbers

Error Message	Probable Cause	Action Message	Corrective Action
3 CONSECUTIVE FLOWCELL CLOGS	Three consecutive flow cell clogs (any combination of *FC*, *PC1*, and *PC2*) occurred.	*PURGE THE FLOWCELL*	1. Clear the flow-cell clog. See the customer's Special Procedures and Troubleshooting manual. 2. To resume operation, access the appropriate screen, reselect the mode of operation, and rerun the samples.
3 CONSECUTIVE NO MATCHES	Processed sample's primary identifier did not match any entry in preassigned worklist for 3 consecutive cycles.	*CLEAR ERROR/ CHECK WLST/ RESTART*	1. Delete one or more samples associated with error from worklist. 2. Restart the system.
3 CONSECUTIVE NO READS	Bar-code reader unable to read barcode on tube three consecutive times.	*CLEAR ERRORS/ CHECK LABELS/ RESTART*	1. Check labels for proper positioning. 2. Delete one or more samples associated with error from worklist. 3. Restart the system.
3 CONSECUTIVE PARTIAL ASPIRATIONS	Three consecutive attempts to aspirate were unsuccessful.	*CHECK/CLEAN THE NEEDLE*	1. Check the needle for clogs and clean if necessary. See the customer's Special Procedures and Troubleshooting manual. 2. If the needle is not clogged, see the Troubleshooting section in the customer's Special Procedures and Troubleshooting manual for additional corrective actions. 3. Delete one or more samples associated with error from worklist. 4. To resume operation, access the appropriate screen, reselect the mode of operation, and rerun the samples.

Table 7.1-1 System Error Messages - Symbols and Numbers *(Continued)*

Error Message	Probable Cause	Action Message	Corrective Action
3 CONSECUTIVE VOTEOUTS	Three consecutive total voteouts of a particular parameter occurred.	*CHECK/CLEAN THE APERTURES*	1. Zap the apertures. See the customer's Special Procedures and Troubleshooting manual. 2. If error recurs, check the mixing bubbles. See the Troubleshooting section in the customer's Special Procedures and Troubleshooting manual for corrective actions. 3. If error recurs, bleach the apertures. See the customer's Special Procedures and Troubleshooting manual. 4. Delete one or more samples associated with error from worklist. 5. To resume operation, access the appropriate screen, reselect the mode of operation, and rerun the samples.
+5 Vdc OUT OF RANGE [XX.XX] **Note:** XX.XX = actual reading.	+5 Vdc instrument voltage out of operating range. Range is +4.75 to +5.25 Vdc.	*PERFORM SYSTEM TEST*	1. Perform System Test. See the customer's Special Procedures and Troubleshooting manual. 2. Replace fuse if necessary. See the customer's Special Procedures and Troubleshooting manual.
+6.3 Vdc OUT OF RANGE [XX.XX] **Note:** XX.XX = actual reading.	+6.3 Vdc instrument voltage out of operating range. Range is +5.98 to +6.62 Vdc.	*PERFORM SYSTEM TEST*	1. Perform System Test. See the customer's Special Procedures and Troubleshooting manual. 2. Replace fuse if necessary. See the customer's Special Procedures and Troubleshooting manual.
10 NO READ, NO MATCH, PART.ASP	Ten attempts to read, match, and/or aspirate sample were unsuccessful and posted on worklist.	*CLR ERRORS/CHK LBL,WLST, ASP/ RESTART*	1. Delete one or more samples with *NO READ*, *NO MATCH* or *PART ASP* messages from worklist. 2. Check labels for proper positioning and needle for clogs. 3. Clean needle if necessary. See the customer's Special Procedures and Troubleshooting manual. 4. Restart the system.
10-13 mm TUBE SENSOR ERROR **Note:** Applicable to HmX analyzer with Rotary Cap-Pierce module only.	Error detected by tube sensor; code wheel sensors should be cleaned or are faulty.	*CLEAN CODEWHEEL SENSORS*	1. Clean code wheel sensors. See the customer's Special Procedures and Troubleshooting manual. 2. To resume operation, access the appropriate screen, reselect the mode of operation, and rerun the samples.

Table 7.1-1 System Error Messages - Symbols and Numbers *(Continued)*

Error Message	Probable Cause	Action Message	Corrective Action
+12 Vdc OUT OF RANGE [XX.XX] **Note:** XX.XX = actual reading.	+12 Vdc instrument voltage out of operating range. Range is +11.40 to +12.60 Vdc.	*PERFORM SYSTEM TEST*	1. Perform System Test. See the customer's Special Procedures and Troubleshooting manual. 2. Replace fuse if necessary. See the customer's Special Procedures and Troubleshooting manual.
-15 Vdc OUT OF RANGE [XX.XX] **Note:** XX.XX = actual reading.	-15 Vdc instrument voltage out of operating range. Range is -15.75 to -14.25 Vdc.	*PERFORM SYSTEM TEST*	1. Perform System Test. See the customer's Special Procedures and Troubleshooting manual. 2. Replace fuse if necessary. See the customer's Special Procedures and Troubleshooting manual.
+15 Vdc OUT OF RANGE [XX.XX] **Note:** XX.XX = actual reading.	+15 Vdc instrument voltage out of operating range. Range is +14.25 to +15.75 Vdc.	*PERFORM SYSTEM TEST*	1. Perform System Test. See the customer's Special Procedures and Troubleshooting manual. 2. Replace fuse if necessary. See the customer's Special Procedures and Troubleshooting manual.
16 mm TUBE SENSOR ERROR **Note:** Applicable to HmX analyzer with Rotary Cap-Pierce module only.	Error detected by tube sensor; code wheel sensors should be cleaned or are faulty.	*CLEAN CODEWHEEL SENSORS*	1. Clean code wheel sensors. See the customer's Special Procedures and Troubleshooting manual. 2. To resume operation, access the appropriate screen, reselect the mode of operation, and rerun the samples.
+24 Vdc OUT OF RANGE [XX.XX] **Note:** XX.XX = actual reading.	+24 Vdc instrument voltage out of operating range. Range is +22.80 to +25.20 Vdc.	*PERFORM SYSTEM TEST*	1. Perform System Test. See the customer's Special Procedures and Troubleshooting manual. 2. Replace fuse if necessary. See the customer's Special Procedures and Troubleshooting manual.
30 PSI OUT OF RANGE [XX.XX] **Note:** XX.XX = actual reading.	Pressure out of established operating range.	*CHECK/ADJUST 30 PSI*	1. Perform System Test to check the pressure. See the customer's Special Procedures and Troubleshooting manual. 2. Adjust the 30 psi pressure. See the customer's Special Procedures and Troubleshooting manual.
+240 Vdc OUT OF RANGE [XX.XX] **Note:** XX.XX = actual reading.	+240 Vdc instrument voltage out of operating range. Range is +228.0 to +265.0 Vdc.	*PERFORM SYSTEM TEST*	1. Perform System Test. See the customer's Special Procedures and Troubleshooting manual. 2. Replace fuse if necessary. See the customer's Special Procedures and Troubleshooting manual.

Table 7.1-1 System Error Messages - Symbols and Numbers *(Continued)*

Error Message	Probable Cause	Action Message	Corrective Action
+300 Vdc OUT OF RANGE [XX.XX] **Note:** XX.XX = actual reading.	+300 Vdc instrument voltage out of operating range. Range is +285 to +315 Vdc.	*PERFORM SYSTEM TEST*	1. Perform System Test. See the customer's Special Procedures and Troubleshooting manual. 2. Replace fuse if necessary. See the customer's Special Procedures and Troubleshooting manual.
+1350 Vdc OUT OF RANGE [XX.XX] **Note:** XX.XX = actual reading.	+1350 Vdc instrument voltage out of operating range. Range is +1186 to +1523 Vdc.	*PERFORM SYSTEM TEST*	1. Open the right side door. Check if the red LED is lit on the TTM laser cover. If it is not, press down on the cover. If this does not correct the problem, go to step 2. 2. Perform System Test. See the customer's Special Procedures and Troubleshooting manual. 3. Replace fuse if necessary. See the customer's Special Procedures and Troubleshooting manual.

Table 7.1-2 System Error Messages - A and B

Error Message	Probable Cause	Action Message	Corrective Action
A/D FAILURE	Analog-to-digital converter failed to generate an interrupt within specified time.	*RE-ENTER FUNCTION/ RECYCLE SPECIMEN*	1. Attempt to perform requested function again, and rerun the specimen. 2. If error recurs, reset the system.
A/D MEASUREMENT ERROR	Analog-to-digital converter encountered too much noise on ground reference.	*RE-ENTER FUNCTION/ RECYCLE SPECIMEN*	1. Attempt to perform requested function again, and rerun the specimen. 2. If error recurs, reset the system.
ANALYSIS NOT DONE	Instrument error detected by CPU while sample analysis in progress. System locked up.	*RESET THE SYSTEM*	Reset the system.
ANALYZER POWER INTERRUPTION	Instrument detected Analyzer power failure.	*DMS WILL RESET*	1. Any process running in DMS terminates, and the DMS resets. The system resynchronizes and returns to *Ready* state. 2. To resume operation, reselect the desired function.
AUTOLOADER PAUSED **Note:** Applicable to HmX analyzer with Autoloader module only.	Autoloader module reached maximum allowable rocking time for cassettes on rocker bed. Autoloader module paused to prevent damage to samples in cassettes. System now in Secondary mode.	*SELECT STOP THEN START PRIMARY*	Restart the Primary mode: 1. From the Sample Analysis Run window, press F9 **Stop.** 2. Press F2 **Start Primary** to resume Autoloader module operation.
BACKWASH NOT PERFORMED	Rinse block not in proper position for backwash.	*PERFORM RINSE*	From the Sample Analysis Run window, press F8 **Rinse**.
BAD DOWNLOAD MSG RCVD - 196 CODE	DMS received bad download message while downloading 196 code. System locked up.	*RESET THE SYSTEM*	Reset the system.
BAD PORT IN USE TO SEND DATA	Data sent to wrong port. System locked up.	*RESET THE SYSTEM*	Reset the system.
BARCODE NOT READ	Barcode reader unable to read barcode on tube label.	*CHECK LABEL QUALITY*	Verify the bar-code label is properly positioned on the tube and has correct specifications.
BARCODE READER DID NOT RESPOND **Note:** Applicable to HmX analyzer with Autoloader module only.	Bar-code scanner not active. Cass/pos and tube labels not read. System locked up.	*RESET THE SYSTEM*	Reset the system.
BLOOD COMPARISON OUT OF LIMITS	Instrument unable to detect presence of blood.	*REMIX AND REPEAT THE SAMPLE*	1. Remix the blood specimen and rerun it. 2. If error recurs, run in the Secondary mode.

Table 7.1-3 System Error Messages - C

Error Message	Probable Cause	Action Message	Corrective Action
CAL FACTORS NOT WITHIN LIMITS	At least one calibration factor requested for transmission is not within specified limits.	*REPEAT CBC CALIBRATION*	Check the limits and recalibrate the instrument.
CANNOT BATCH. SYSTEM IN RUN MODE	Attempt made to batch transmit or print while system was processing a sample in Run mode.	*PRESS F9-STOP. RETRY BATCH XMIT/PRN*	1. Wait until the sample is completed. 2. From the Run window, press F9 **Stop** (to set DMS mode to no activity) and request batch processing again.
CANNOT CYCLE WHILE BATCH PROCESSING	Attempt made to run a sample while batch processing in progress.	*WAIT/STOP PROCESSING TO START CYCLE*	Wait until batch processing is completed, then attempt to run sample or cancel batch (**Special Functions ▸▸ Set Up ▸▸ Sample Analysis ▸▸ Set Up ▸▸ Delete Host Spooler or Clear Printer Spooler Queue**) process.
CANNOT MOVE CASSETTE ON BED **Note:** Applicable to HmX analyzer with Autoloader module only.	Cassette does not move along the bed; cassette jammed, indexing mechanism failed, or cassette motor faulty.	*CHECK BED MECHANISM/ CASSETTE*	1. Put the instrument in Standby. 2. Remove the jammed cassette. 3. Verify performance of indexing mechanism. See the customer's Special Procedures and Troubleshooting manual.
CANNOT OPEN RAW.DAT FILE	System unable to open RAW.DAT file. Space on hard disk may be insufficient.	*DISK MAY BE FULL*	Call your Beckman Coulter Representative. **Service only:** Verify amount of space remaining. If necessary, recover hard disk space from options previously selected by accessing and clearing control files or by removing data.
CANNOT ROCK BED **Note:** Applicable to HmX analyzer with Autoloader module only.	Bed does not rock; indexing mechanism jammed or rocking motor faulty.	*CHECK FOR JAMMED MECHANISM*	Verify performance of the indexing mechanism. See the customer's Special Procedures and Troubleshooting manual.

Table 7.1-3 System Error Messages - C *(Continued)*

Error Message	Probable Cause	Action Message	Corrective Action
CANNOT STORE RET RESULTS IN 5C FILE	5C cell control label detected while current sample mode set to RETIC.	*REANALYZE IN CORRECT CYCLE TYPE*	To run 5C cell control sample, change cycle type to CBC+Diff.
CANNOT TRANSMIT CAL FACTORS	Attempt made to transmit calibration factors from Primary or Secondary CBC Calibration screen while the system was running sample.	*MUST STOP INSTRUMENT*	1. From the Sample Analysis Run screen, press F9 **Stop.** 2. Attempt to transmit calibration factors.
CAROUSEL DID NOT ROTATE **Note:** Applicable to HmX analyzer with Rotary Cap-Pierce module only.	Carousel does not rotate; indexing mechanism jammed or rotation motor faulty.	*CHECK FOR A JAMMED MECHANISM*	1. Put the instrument in Standby. 2. Open the lower front cover and manually rotate the carousel. Remove the tube if present. 3. If the carousel is jammed or binding, call your Beckman Coulter Representative. 4. Close the lower front cover and if the problem is resolved, return the Standby/Ready switch to READY.
CARRYOVER IS ACTIVE	Attempt made to change carryover mode of operation without data in carryover file and carryover sample mode was active.	*TO CHANGE MODE, PRESS F9-STOP*	From the Sample Analysis Run screen, press F9 **Stop** to change mode of operation.
CASSETTE LABEL NO READ **Note:** Applicable to HmX analyzer with Autoloader module only.	Single *NO READ* of Cass/pos number occurred, or cassette not advanced.	*RESTART, POSITION WILL BE SKIPPED*	1. Check the cassette label for proper positioning. 2. Access the appropriate screen and reselect the mode of operation.
CASSETTE LOAD FAILURE **Note:** Applicable to HmX analyzer with Autoloader module only.	Cassette does not load; cassette jammed in loading bay.	*CHECK FOR JAMMED CASSETTE*	Remove the jammed cassette. See the customer's Special Procedures and Troubleshooting manual.

Table 7.1-3 System Error Messages - C *(Continued)*

Error Message	Probable Cause	Action Message	Corrective Action
CASSETTE UNLOAD FAILURE **Note:** Applicable to HmX analyzer with Autoloader module only.	Cassette does not unload; cassette jammed in unloading bay.	*CHECK FOR JAMMED CASSETTE*	Remove the jammed cassette. See the customer's Special Procedures and Troubleshooting manual.
CBC CALIBRATION TABLE FULL	CBC calibration completed 60 samples; attempt made to run another sample.	*CLEAR TABLE* *CLEAR TABLE/ RERUN TEST*	Clear the table (delete 60 samples table) and reselect the appropriate mode of operation to rerun desired test.
CBC DATA ACQUISITION FAILURE	CBC acquisition could not be completed because of pending error.	*RE-ENTER FUNCTION/ RECYCLE SPECIMEN*	1. Attempt to perform the requested function again, and rerun the specimen. 2. If error recurs, reset the system.
CLEANER OUT	Out-of-cleaner signal detected from reagent sensor; insufficient cleaner to perform another cycle.	*REPLACE CLEANER, UPDATE FILE, PRIME*	1. Replace the cleaning agent. 2. Update the reagent file. 3. Prime the cleaner. **Service only:** If the cleaning agent container is not empty, check for - • A damaged or improperly installed pick-up tube. • A loose or disconnected reagent supply line. • Bubbles trapped in a check valve.
COMMAND COMPLETION NOT SUCCESSFUL	The system could not complete request from DMS.	*CHECK SYSTEM CABLES*	Verify the cables are plugged firmly into the correct jacks. See the Installation Chapter of the Reference manual.
COMMAND TO DIGIBOARD NOT ACCEPTED	Digiboard software detected error and rejected command from DMS.	*CHECK SYSTEM CABLES*	Verify the cables are plugged firmly into the correct jacks. See Installation Chapter of the Reference manual.
COMPRESSOR DID NOT BLEED [XX.XX] **Note:** XX.XX = actual reading.	Compressor bleed sequence activated, but pressure did not drop in specified time.	*CONTACT SERVICE*	Call your Beckman Coulter Representative.

Table 7.1-3 System Error Messages - C *(Continued)*

Error Message	Probable Cause	Action Message	Corrective Action
COMPRESSOR PRESSURE ERROR [XX.XX] **Note:** XX.XX = actual reading.	Compressor pressure did not rise to normal operating range.	*PERFORM SYSTEM TEST*	1. Perform System Test to confirm the pressure reading. See the customer's Special Procedures and Troubleshooting manual. 2. If the compressor pressure is still out of range, call your Beckman Coulter Representative. 3. **Service only**: Adjust the pressure.
CONTROL SAMPLE IDENTIFIED	Carryover sample mode active, and 5C control run. Carryover test invalidated.	*BEGIN CARRYOVER TEST AGAIN/QUIT*	If sample identified as control by ID, press F9 **Stop**, reselect the sample mode, and restart the test.
CONTROL SAMPLE IDENTIFIED	Diff mode off when 5C control run; results cannot be reported.	*DIFF OFF, DIFF RESULTS UNAVAILABLE*	Set Diff mode to ON and rerun the 5C control.
COULD NOT ACCESS AUTOPRINT QUEUE	Autoprint queue does not exist or is in use.	No action message associated with this error.	1. Reset the system. 2. Reselect the function. 3. If error recurs, call your Beckman Coulter Representative.
COULD NOT ACCESS BATCH QUEUE	Batch print queue does not exist or is in use.	No action message associated with this error.	1. Reset the system. 2. Reselect the function. 3. If error recurs, call your Beckman Coulter Representative.
COULD NOT ACCESS MANUAL QUEUE	Queue for manual print requests does not exist or is in use.	No action message associated with this error.	1. Reset the system. 2. Reselect the function. 3. If error recurs, call your Beckman Coulter Representative.
COULD NOT CLOSE AUTOPRINT QUEUE	Autoprint queue exists but cannot be closed.	No action message associated with this error.	1. Reset the system. 2. Reselect the function. 3. If error recurs, call your Beckman Coulter Representative.
COULD NOT CLOSE BATCH QUEUE	Batch print queue exists but cannot be closed.	No action message associated with this error.	1. Reset the system. 2. Reselect the function. 3. If error recurs, call your Beckman Coulter Representative.
COULD NOT CLOSE MANUAL QUEUE	Queue for manual print requests exists but cannot be closed.	No action message associated with this error.	1. Reset the system. 2. Reselect the function. 3. If error recurs, call your Beckman Coulter Representative.
COULD NOT DELETE AUTOPRINT DATA	Autoprint file exists that is already spooled; therefore, file cannot be deleted.	No action message associated with this error.	1. Reset the system. 2. Reselect the function. 3. If error recurs, call your Beckman Coulter Representative.

Table 7.1-3 System Error Messages - C *(Continued)*

Error Message	Probable Cause	Action Message	Corrective Action
COULD NOT DELETE AUTOPRINT QUEUE	Autoprint queue does not exist or is in use; therefore, queue cannot be deleted at this time.	No action message associated with this error.	1. Reset the system. 2. Reselect the function. 3. If error recurs, call your Beckman Coulter Representative.
COULD NOT DELETE BATCH DATA	Batch print file exists that is already spooled; therefore, file cannot be deleted.	No action message associated with this error.	1. Reset the system. 2. Reselect the function. 3. If error recurs, call your Beckman Coulter Representative.
COULD NOT DELETE BATCH QUEUE	Batch print queue does not exist or is in use; therefore, queue cannot be deleted at this time.	No action message associated with this error.	1. Reset the system. 2. Reselect the function. 3. If error recurs, call your Beckman Coulter Representative.
COULD NOT DELETE MANUAL DATA	File for manual print queue exists that is already spooled; therefore, file cannot be deleted.	No action message associated with this error.	1. Reset the system. 2. Reselect the function. 3. If error recurs, call your Beckman Coulter Representative.
COULD NOT DELETE MANUAL QUEUE	Queue for manual print requests does not exist or is in use; therefore, queue cannot be deleted at this time.	No action message associated with this error.	1. Reset the system. 2. Reselect the function. 3. If error recurs, call your Beckman Coulter Representative.
COULD NOT FIND AUTOPRINT DATA	Autoprint queue exists; however, there is no data in the queue.	No action message associated with this error.	1. Reset the system. 2. Reselect the function. 3. If error recurs, call your Beckman Coulter Representative.
COULD NOT FIND BATCH DATA	Batch print queue exists; however, there is no data in the queue.	No action message associated with this error.	1. Reset the system. 2. Reselect the function. 3. If error recurs, call your Beckman Coulter Representative.
COULD NOT FIND MANUAL DATA	Queue for manual print requests exists; however, there is no data in the queue.	No action message associated with this error.	1. Reset the system. 2. Reselect the function. 3. If error recurs, call your Beckman Coulter Representative.
COULD NOT OPEN AUTOPRINT QUEUE	Autoprint queue exists; however, it cannot be opened to be read from or written to.	No action message associated with this error.	1. Reset the system. 2. Reselect function. 3. If error recurs, call your Beckman Coulter Representative.
COULD NOT OPEN BATCH QUEUE	Batch print queue exists; however, it cannot be opened to be read from or written to.	No action message associated with this error.	1. Reset the system. 2. Reselect the function. 3. If error recurs, call your Beckman Coulter Representative.

Table 7.1-3 System Error Messages - C *(Continued)*

Error Message	Probable Cause	Action Message	Corrective Action
COULD NOT OPEN MANUAL QUEUE	Queue for manual print requests exists; however, it cannot be opened to be read from or written to.	No action message associated with this error.	1. Reset the system. 2. Reselect the function. 3. If error recurs, call your Beckman Coulter Representative.
COULD NOT READ FROM AUTOPRINT QUEUE	Autoprint queue exists and is open; however, it cannot be read.	No action message associated with this error.	1. Reset the system. 2. Reselect the function. 3. If error recurs, call your Beckman Coulter Representative.
COULD NOT READ FROM BATCH QUEUE	Batch print queue exists and is open; however, it cannot be read.	No action message associated with this error.	1. Reset the system. 2. Reselect the function. 3. If error recurs, call your Beckman Coulter Representative.
COULD NOT READ FROM MANUAL QUEUE	Queue for manual print requests exists and is open; however, it cannot be read.	No action message associated with this error.	1. Reset the system. 2. Reselect the function. 3. If error recurs, call your Beckman Coulter Representative.
COULD NOT WRITE TO AUTOPRINT QUEUE	Autoprint queue exists and is open; however it cannot be written to.	No action message associated with this error.	1. Reset the system. 2. Reselect the function. 3. If error recurs, call your Beckman Coulter Representative.
COULD NOT WRITE TO BATCH QUEUE	Batch print queue exists and is open; however, it cannot be written to.	No action message associated with this error.	1. Reset the system. 2. Reselect the function. 3. If error recurs, call your Beckman Coulter Representative.
COULD NOT WRITE TO MANUAL QUEUE	Queue for manual print requests exists and is open; however, it cannot be written to.	No action message associated with this error.	1. Reset the system. 2. Reselect the function. 3. If error recurs, call your Beckman Coulter Representative.
CRC ERROR ON READ SYSTEM.CFG FILE	Cyclic redundancy check (CRC) error occurred while reading SYSTEM.CFG file. System locked up.	RESET THE SYSTEM	Reset the system.
CTL FILE I/O ERROR	Control file input/output error occurred. System locked up.	RESET THE SYSTEM	Reset the system.
CTL FILE NN, <FILE> IS FULL	Control file number NN, filename <FILE> full; no further data can be saved to file.	CLEAR THE CONTROL FILE	1. Delete data in control file NN. 2. Reselect the mode of operation. 3. Restart the test.

Table 7.1-4 System Error Messages - D through H

Error Message	Probable Cause	Action Message	Corrective Action
DIFF DATA ACQUISITION FAILURE	Differential data acquisition could not be completed because of pending error.	*RE-ENTER FUNCTION/ RECYCLE SPECIMEN*	Reselect the function, and recycle the specimen.
DIFF PRESSURE OUT OF RANGE	Differential pressure not within established operating range.	*CHECK/ADJUST DIFF PRESSURE*	1. Perform System Test to confirm the problem. See the customer's Special Procedures and Troubleshooting manual. 2. If the diff pressure is still out, call your Beckman Coulter Representative. 3. **Service only:** Adjust the differential pressure.
DILUENT COMPARISON OUT OF LIMITS	Diluent comparison out of limits and could not detect presence of diluent.	*PRIME DILUENT AND REPEAT THE SAMPLE*	1. Prime the diluent, and repeat the sample. 2. If problem recurs, check that the BSV is rotating completely. If it is not, clean and cycle the BSV. See the customer's Special Procedures and Troubleshooting manual.
DILUENT OUT	Out-of-diluent signal detected from reagent sensor; insufficient diluent to perform another cycle.	*REPLACE DILUENT, UPDATE FILE, PRIME*	1. Replace the diluent. 2. Update the reagent file. 3. Prime the diluent. **Service only:** If the diluent container is not empty, check for - • A damaged or improperly installed pick-up tube. • A loose or disconnected reagent supply line. • Bubbles trapped in a check valve.
DILUTER TABLE ERROR	During download, instrument could not find usable diluter table.	*RESET THE SYSTEM*	Reset the system.
DISK DRIVE C: COULD NOT BE ACCESSED	Drive C has less than one megabyte of space left; therefore, new file for queue cannot be created in drive C.	No action message associated with this error.	Call your Beckman Coulter Representative. **Service only:** Delete files on drive C and/ or recover hard disk space from options previously selected by removing data.

Table 7.1-4 System Error Messages - D through H *(Continued)*

Error Message	Probable Cause	Action Message	Corrective Action
DISK DRIVE C: IS FULL	Space on drive C hard disk insufficient for execution of requested option.	*CHECK DATABASE/ REMOVE DATA*	Call your Beckman Coulter Representative. **Service only:** Recover drive C hard disk space from options previously selected by removing data.
DISK DRIVE D: IS FULL	Space on drive D hard disk insufficient for execution of requested option.	*CHECK/CLEAR CONTROL FILES*	Call your Beckman Coulter Representative. **Service only:** Recover drive D hard disk space from options previously selected by accessing and clearing control files.
DISK FULL - ARCHIVING DISCONTINUED	Space on diskette insufficient for archiving all of the tagged samples in the database.	No action message associated with this error.	1. Remove the full diskette from the DMS diskette drive, and insert an empty formatted diskette. 2. Ensure the archive option selected is **New**. 3. Press F8 **Execute**. Any samples tagged but not archived are copied onto the new diskette.
DMS TIMEOUT	DMS did not respond to instrument request in allotted time. The system locked up.	*RESET THE SYSTEM*	Reset the system.
DOWNLOAD NOT SUCCESSFUL	Errors occurred during download of software to instrument from DMS.	*CHECK ERROR LOG*	1. Check the Error Log to determine why the download was unsuccessful. 2. Reset the system. 3. If problem recurs, call your Beckman Coulter Representative.
ERROR FILE I/O ERROR	Error file input/output error occurred on ERROR file. The system locked up.	*RESET THE SYSTEM*	Reset the system.
ERROR READING SYSTEM.CFG FILE	SYSTEM.CFG file could not be read. The system locked up.	*RESET THE SYSTEM*	Reset the system.
ERROR UPDATING SYSTEM.CFG FILE	SYSTEM.CFG file could not be updated. The system locked up.	*RESET THE SYSTEM*	Reset the system.
EXTENSIVE FLAGS GENERATED	Cell classification flags too extensive to display on screen.	*PRINT FOR A COMPLETE LISTING*	Print the sample results to get a complete list of generated flags.
FILE I/O ERROR	File input/output error occurred. The system locked up.	*RESET THE SYSTEM*	Reset the system.

Table 7.1-4 System Error Messages - D through H *(Continued)*

Error Message	Probable Cause	Action Message	Corrective Action
HGB OUT OF RANGE	Hemoglobin lamp voltage not within established operating range. Range is 6.65 to 7.35 V.	*PERFORM SYSTEM TEST*	1. Perform System Test to confirm the problem. See the customer's Special Procedures and Troubleshooting manual. 2. If the Hgb is still out of range: a. Check the Hgb lamp and replace it if it is out. See the customer's Special Procedures and Troubleshooting manual. b. Adjust the Hgb lamp. See the customer's Special Procedures and Troubleshooting manual.
HIGH VACUUM OUT OF RANGE	High vacuum not within established operating range. Range is 17.00 to 28.00 in. of Hg (at sea level).	*CHECK/ADJUST HIGH VACUUM*	1. Check that the vacuum trap is not full of liquid. 2. Check for any obviously split or disconnected tubing. 3. Perform System Test to confirm the high vacuum reading. See the customer's Special Procedures and Troubleshooting manual. 4. If the high vacuum is still out of range, call your Beckman Coulter Representative.
HmX TX BUFF REQUEST NOT SUCCESSFUL	DMS attempted to start new operation before previous operation completed.	*CHECK HmX CABLES*	Verify the cables are plugged firmly into the correct jacks. See Installation Chapter of the Reference manual.
HOST COMM. PARAMETERS UNDEFINED	Host communication parameters not defined.	*DEFINE AND SAVE PARAMETERS*	Define the host parameters on the Communication Definition screen, and save.
HOST TX BUFF REQUEST NOT SUCCESSFUL	DMS attempted to start new operation before previous operation completed.	*CHECK HOST CABLES*	Verify the host computer cables are plugged firmly into the correct jacks. See Installation Chapter of the Reference manual.

Table 7.1-5 System Error Messages - I

Error Message	Probable Cause	Action Message	Corrective Action
ID CANCELED-TIME EXPIRED	Sample ID number entered was canceled because time to respond to Cancel prompt expired.	*REENTER PATIENT ID*	Re-enter the sample ID number, and process sample.
IDENTIFICATION REQUIRED	Sample ID number must be entered to process sample.	*RETURN TO SAMPLE ANALYSIS, ENTER ID*	1. Return to the Sample Analysis screen, and enter sample ID number. 2. Process the sample.
ILLEGAL INSTRUMENT REPLY	Illegal reply received from instrument. The system locked up.	*RESET THE SYSTEM*	Reset the system.
INCOMPATIBLE SAMPLE HANDLER SOFTWARE	Instrument detected that downloaded software incompatible with sample handler hardware. The system locked up.	No action message associated with this error.	1. Reset the system. 2. If problem recurs, call your Beckman Coulter Representative. 3. **Service only:** Check code 196 software type (i.e., Autoloader module or Rotary-Cap Pierce module) on DMS and, if necessary, load appropriate software.
INCOMPLETE NEEDLE EXTRACT **Note:** Applicable to HmX analyzer with Autoloader module only.	Needle did not fully retract from tube; needle jammed or sensor failed.	*REFER TO MANUAL FOR HELP*	See the Troubleshooting section in the customer's Special Procedures and Troubleshooting manual for corrective actions.
INCOMPLETE NEEDLE EXTRACT **Note:** Applicable to HmX analyzer with Rotary-Cap Pierce module only.	Needle did not fully retract from tube; needle jammed or sensor failed.	*REFER TO MANUAL FOR HELP*	Call your Beckman Coulter Representative.
INCOMPLETE NEEDLE PIERCE **Note:** Applicable to HmX analyzer with Autoloader module only.	Needle did not completely pierce tube.	*REFER TO MANUAL FOR HELP*	See the Troubleshooting section in the Special Procedures and Troubleshooting manual for corrective actions.
INCOMPLETE NEEDLE PIERCE **Note:** Applicable to HmX analyzer with Rotary-Cap Pierce module only.	Needle did not completely pierce tube.	*REFER TO MANUAL FOR HELP*	Call your Beckman Coulter Representative.

Table 7.1-5 System Error Messages - I *(Continued)*

Error Message	Probable Cause	Action Message	Corrective Action
INCOMPLETE NEEDLE RETRACT **Note:** Applicable to HmX analyzer with Autoloader module only.	Needle did not fully retract after piercing tube; needle jammed or sensor failed.	*REFER TO MANUAL FOR HELP*	See the Troubleshooting section in the Special Procedures and Troubleshooting manua for corrective actions.
INCOMPLETE NEEDLE RETRACT **Note:** Applicable to HmX analyzer with Rotary Cap-Pierce module only.	Needle did not fully retract after piercing tube; needle jammed or sensor failed.	*REFER TO MANUAL FOR HELP*	Call your Beckman Coulter Representative.
INCOMPLETE RAW DATA TRANSMISSION	Raw data could not be completely transmitted because size of RAW.DAT file inadequate. The system locked up.	*RESET THE SYSTEM*	Reset the system.
INCOMPLETE TUBE FORWARD **Note:** Applicable to HmX analyzer with Autoloader module only.	Tube did not move completely forward; tube jammed.	*CHECK FOR A JAMMED TUBE*	Remove the jammed tube. See the customer's Special Procedures and Troubleshooting manual.
INCOMPLETE TUBE RETRACT **Note:** Applicable to HmX analyzer with Autoloader module only.	Tube did not return to cassette from piercing position; tube jammed.	*CHECK FOR A JAMMED TUBE*	Remove the jammed tube. See the customer's Special Procedures and Troubleshooting manual.
INCONSISTENT SAMPLE HANDLER HARDWARE	Instrument detected that downloaded software incompatible with sample handler hardware. The system locked up.	*CHECK HARDWARE-REIN STALL SOFTWARE*	1. Reset the system. 2. If error recurs, call your Beckman Coulter Representative. 3. **Service only:** Check code 196 software type (that is Autoloader or Cap Piercer) on DMS and, if necessary, load appropriate software.
INSTRUMENT CONFIGURATION ERROR	Error detected in random access memory (RAM). The system locked up.	*RESET THE SYSTEM*	Reset the system.
INSTRUMENT INTERNAL ERROR XXX **Note:** XXX = actual internal code number.	Internal instrument error detected by CPU. The system locked up. For code definition, refer to Table 7.1-12, Internal Instrument Codes.	*RESET THE SYSTEM*	Reset the system.

Table 7.1-5 System Error Messages - I *(Continued)*

Error Message	Probable Cause	Action Message	Corrective Action
INSTRUMENT REPLY TIMEOUT	Time expired while waiting for reply from instrument. The system locked up.	*RESET THE SYSTEM*	Ensure that the lower front door is closed. Reset the system.
INSTRUMENT TO 196 CODE DWNLD FAILED	196 code download failed from instrument to sample handler. The system locked up.	*RESET THE SYSTEM*	Ensure that the lower front door is closed. Reset the system.
INV LABEL - STORED IN CURRENT MODE	Beckman Coulter label other than 5C control bar-code ID label (that is, 4C Plus cell control or S-CAL calibrator) detected.	*USE VALID LABELS ONLY*	Acknowledge error by pressing Alt+End to stop beeping. Rerun sample with the 5C cell control bar-code ID label.
INVALID 376 MOD/ CMD RCVD 196 DWNLD	During 196 download, DMS received response from instrument with incorrect destination.	*RESET THE SYSTEM*	Reset the system.
INVALID 376 MOD/ CMD RCVD 196CFG DLD	During 196 configuration download, DMS received response from instrument with incorrect destination.	*RESET THE SYSTEM*	Reset the system.
INVALID MOD/CMD IN DLTR DWNLD	During diluter download, DMS received response from instrument with incorrect destination.	*RESET THE SYSTEM*	Reset the system.
INVALID MOD/CMD RCVD 376CFG DWNLD	During 376 configuration download, DMS received response from instrument with incorrect destination.	*RESET THE SYSTEM*	Reset the system.
INVALID MOD/CMD RCVD IN DLTR DWNLD	During diluter download, DMS received response from instrument with incorrect destination.	*RESET THE SYSTEM*	Reset the system.
INVALID SYSTEM COMMAND	Sample handler detected invalid command from instrument. The system locked up.	*RESET THE SYSTEM*	Reset the system.

Table 7.1-6 System Error Messages - J through P

Error Message	Probable Cause	Action Message	Corrective Action
LESS THAN 1 MEGABYTE LEFT ON DRIVE C	Drive C has less than one megabyte of space.	No action message associated with this error.	Call your Beckman Coulter Representative. **Service only:** Delete unnecessary files from drive C.
LOAD ELEVATOR FAILURE **Note:** Applicable to HmX analyzer with Autoloader module only.	Load (right) elevator not functioning. Load elevator's motor may have failed.	*CHECK ELEVATOR MECHANISM*	Verify performance of the elevator mechanism. See the customer's Special Procedures and Troubleshooting manual.
LOAD STACK NOT EMPTY **Note:** Applicable to HmX analyzer with Autoloader module only.	Loading bay not empty. This prevents load (right) elevator from functioning properly.	*EMPTY THE LOAD STACK*	1. Empty the loading bay. 2. To test performance of loading elevator, reselect desired function.
LOW VACUUM OUT OF RANGE	Low vacuum out of established operating range. Range is 5.940 to 6.060 in. of Hg (at sea level).	*CHECK/ADJUST LOW VACUUM*	1. Check that the vacuum trap is not full of liquid. 2. Check for any obviously split or disconnected tubing. 3. Perform System Test to check the vacuum. See the customer's Special Procedures and Troubleshooting manual. 4. Adjust the vacuum. See the customer's Special Procedures and Troubleshooting manual.
LOWER DOOR OPEN	Door opened when not in Stop mode.	*CLOSE DOOR/ RESELECT FUNCTION*	Close door and reselect the desired function.
LYSE OUT	Out-of-lyse signal detected from reagent sensor; insufficient lytic reagent to perform another cycle.	*REPLACE LYSE, UPDATE FILE, PRIME*	1. Replace the lytic reagent. 2. Update the reagent file. 3. Prime the lyse. **Service only:** If the diluent container is not empty, check for - • A damaged or improperly installed pick-up tube. • A loose or disconnected reagent supply line. • Bubbles trapped in a check valve.
MEMORY ERROR	DMS memory error detected. The system locked up.	*RESET THE SYSTEM*	Reset the system.

Table 7.1-6 System Error Messages - J through P *(Continued)*

Error Message	Probable Cause	Action Message	Corrective Action
MULT. INTER. WHILE RECEIVING DATA	DMS detected communication errors while receiving data. The system locked up.	*RESET THE SYSTEM*	Reset the system.
MULTIPLE ERRORS	More than one error detected by instrument.	*CHECK ERROR LOG*	Check Error Log (Ctrl+F2) to see which errors occurred and the appropriate corrective actions.
NEEDLE FORWARD SENSOR ERROR	Needle forward sensor may be faulty.	*REFER TO MANUAL FOR HELP*	1. Clean the needle forward sensor. See the customer's Special Procedures and Troubleshooting manual. 2. If error recurs, call your Beckman Coulter Representative.
NEEDLE HOME SENSOR ERROR	Needle home sensor may be faulty.	*REFER TO MANUAL FOR HELP*	Call your Beckman Coulter Representative.
NO PARAMETER SELECTED	Enter Calibration Factors or Enter Secondary Cal Factors requested before parameters for calibration were selected.	*CANNOT ENTER CAL FACTORS*	From the F5-Optns/Select Parameters screen, select the parameters to be calibrated.
NO PARAMETER SELECTED	Transmission of calibration factors requested, but parameters for calibration were not selected.	*CANNOT TRANSMIT*	From the F5-Optns/Select Parameters screen, select the parameters to be calibrated and transmitted.
PAK OUT	Out-of-PAK signal detected from reagent sensor; insufficient PAK reagent to perform another cycle.	*REPLACE PAK, UPDATE FILE, PRIME*	1. Replace the PAK. 2. Update the reagent file. 3. Prime the PAK. **Service only:** If the PAK is not empty, check for - • A damaged or improperly installed pick-up tube. • A loose or disconnected reagent supply line. • Bubbles trapped in a check valve.

Table 7.1-6 System Error Messages - J through P *(Continued)*

Error Message	Probable Cause	Action Message	Corrective Action
PARTIAL ASPIRATION	Two attempts to aspirate from single tube unsuccessful.	*CHECK THE SPECIMEN AND SYSTEM*	1. Ensure the specimen tube has sufficient whole blood. 2. Delete one or more samples associated with error from worklist. 3. Rerun the specimen in the Primary mode. 4. If error recurs, rerun that specimen in the Secondary mode. **Service only:** If this message occurs for most or all samples: 1. Cycle a sample in the Primary mode, and observe the Diluter during aspiration for normal operation. 2. If the Diluter is aspirating correctly, check the blood detectors as instructed under Heading 4.21, BLOOD/BUBBLE DETECTORS GAIN ADJUSTMENT.
PATIENT ID REQUIRED FOR PROCESSING	Attempt made to aspirate sample without entering patient ID.	*ENTER ID? YES, CANCEL*	Enter patient ID and resume processing.
PREVIOUS SAMPLE NOT XMITTED TO HOST	Previous sample's result not transmitted to host computer.	*CHECK HOST CABLES/SETTING*	1. If this error occurred and you do not have a host computer connection, reset the system. 2. Verify the host computer cables are plugged firmly into the correct jacks. See Installation Chapter of the Reference manual. 3. If error recurs, verify host computer setting on Host Computer Definition window.

Table 7.1-7 System Error Messages - R

Error Message	Probable Cause	Action Message	Corrective Action
RAW DATA SPACE FULL-CAPTURE OFF	Space where raw data stored is full; raw data capture canceled.	*BACKUP AND DELETE RAW DATA*	Call your Beckman Coulter Representative. **Service only:** 1. Backup existing RAW.DAT file to Bernoulli diskette. 2. From the Raw Data menu, delete raw data files from hard disk.
RAW DATA SWITCH OFF	Raw data sent; however, raw data switch option turned OFF at DMS.	*TURN RAW SWITCH ON*	Call your Beckman Coulter Representative. **Service only:** On the Raw Data Option screen, turn raw data switch option ON.
RAW DATA TRANSMISSION ERROR	The system error detected during raw data transmission. The system locked up.	*RESET THE SYSTEM*	Reset the system.
RAW FILE TOO LARGE	RAW.DAT file too large. The system locked up.	*RESET THE SYSTEM*	Reset the system.
RBC AND WBC BATH OVERFLOW	RBC and WBC baths overflowed.	*CHECK ERROR LOG AND FLUIDICS*	See the customer's Special Procedures and Troubleshooting manual.
RBC BATH OVERFLOW	RBC bath overflowed.	*CHECK ERROR LOG AND FLUIDICS*	See the customer's Special Procedures and Troubleshooting manual.
RBC VALUE MUST BE > 0 AND < OR EQUAL TO 9.99	Out-of-range RBC value entered.	*PLEASE REENTER RBC VALUE*	Enter valid RBC value.
RBC VALUE MUST BE > 0 AND < OR EQUAL TO 999	Out-of-range RBC value entered.	*PLEASE REENTER RBC VALUE*	Enter valid RBC value.
RED A/I/V OUT OF RANGE	Red aperture current voltage (A/I/V) out of established operating range. Range is 141.5 to 169.1 V.	*PERFORM SYSTEM TEST*	Perform System Test. See the customer's Special Procedures and Troubleshooting manual. If the problem recurs, call your Beckman Coulter Representative.
REPRODUCIBILITY IS ACTIVE	Attempt made to change Reproducibility mode of operation without data in reproducibility file and another Reproducibility mode active.	*TO CHANGE MODE, PRESS F9-STOP*	Change mode of operation by pressing F9 **Stop**.
REPRODUCIBILITY TABLE FULL	Reproducibility cycle completed 60 samples; attempt made to run another sample.	*CLEAR TABLE* *CLEAR TABLE/ RERUN TEST*	1. Clear the table (delete 60 sample table). 2. Reselect the appropriate mode of operation to rerun the desired test.

Table 7.1-7 System Error Messages - R *(Continued)*

Error Message	Probable Cause	Action Message	Corrective Action
RETIC VOLTAGE ERROR [XX.XX] **Note:** XX.XX = actual reading.	Retic voltage out of established operating range. Range is 0.20 to 1.20 Vdc.	*PERFORM SYSTEM TEST*	Perform System Test. See the customer's Special Procedures and Troubleshooting manual.
RETRIES EXCEEDED IN DILUTER DWNLD	Three attempts to download diluter table from DMS to instrument failed. The system locked up.	*RESET THE SYSTEM*	Reset the system.
RETRIES FAILED 196CODE DWNLD TO 376	Three attempts to download 196 code from DMS to instrument failed. The system locked up.	*RESET THE SYSTEM*	Ensure the lower front door is closed. Reset the system.
RF VOLTAGE LOW	RF voltage dropped below lower limit due to weak RF oscillator circuit.	*PERFORM SYSTEM TEST*	1. Check that correct diluent is in use. Blood bank saline can cause this error. 2. Check that the diluent is primed. 3. Perform System Test to confirm the problem. See the customer's Special Procedures and Troubleshooting manual. 4. A clogged flow cell can cause this error. Clear the flow-cell clog. See the customer's Special Procedures and Troubleshooting manual. 5. If the RF voltage is still low, call your Beckman Coulter Representative.
RINSE BLOCK ERROR	Rinse block did not return to home position.	*CONTACT SERVICE*	Check if the manual aspirate probe is fully extended. Check if the aspirate probe is bent. Call your Beckman Coulter Representative.
ROCKER BED NOT EMPTY **Note:** Applicable to HmX analyzer with Autoloader module only.	Cassette placed directly onto rocker bed after a "Clear the Bed/Autoloader Home" function initiated.	*RESTART THE FUNCTION*	Reinitiate the "Clear the Bed/Autoloader Home" function to automatically clear the bed.

Table 7.1-8 System Error Messages - S

Error Message	Probable Cause	Action Message	Corrective Action
SAMPLE HANDLER BARCODE SENSOR ERROR **Note:** Applicable to HmX analyzer with Rotary Cap-Pierce module only.	Error detected by sample handler bar-code sensor. Bar code detection sensors should be cleaned or are faulty.	*CLEAN BARCODE SENSORS*	1. Clean the bar-code sensors. See the customer's Special Procedures and Troubleshooting manual. 2. To resume operation, access the appropriate screen, reselect the mode of operation, and rerun the samples. **Note:** The system may be used with faulty sensor; however, all bar-coded information must be entered manually.
SAMPLE HANDLER COMM. FAILURE	Instrument received illegal message or has not received any message from sample handler.	*RESET THE SYSTEM*	Reset the system.
SAMPLE HANDLER COMMUNICATION ERROR	Analyzer lost communication with sample handler. The system locked up.	*RESET THE SYSTEM*	Reset the system.
SAMPLE HANDLER HAND DETECT ERROR **Note:** Applicable to HmX analyzer with Rotary Cap-Pierce module only.	Error detected by sample handler hand detect sensor. Object-detection sensors should be cleaned or are faulty.	*CLEAN OBJECT DETECTION SENSORS*	1. Clean object-detection sensors. See the customer's Special Procedures and Troubleshooting manual. 2. To resume operation, access the appropriate screen, reselect the mode of operation, and rerun the samples.
SAMPLE HANDLER NOT OPERATIONAL	Instrument detected severe sample-handler error.	*RESET THE SYSTEM*	Reset the system.
SAMPLE HANDLER SENSOR 16 ERROR	Error detected by sample-handler sensor 16. Needle not aligned.	*CHECK NEEDLE ALIGNMENT*	Call your Beckman Coulter Representative.
SAMPLE HANDLER SENSOR 17 ERROR **Note:** Applicable to HmX analyzer with Autoloader module only.	Error detected by sample-handler sensor 17. Bed position sensor should be cleaned or is faulty.	*CLEAN BED POSITION SENSOR*	1. Clean the Autoloader module bed-position sensors. See the customer's Special Procedures and Troubleshooting manual. 2. To resume operation, access the appropriate screen, reselect mode of operation, and rerun the sample.
SAMPLE HANDLER TIMEOUT ERROR	Instrument did not respond to sample handler within specified time.	*RESET THE SYSTEM*	Ensure the lower front door is closed. Reset the system.

Table 7.1-8 System Error Messages - S *(Continued)*

Error Message	Probable Cause	Action Message	Corrective Action
SAMPLE NOT TRANSMITTED TO HOST	Sample's result not transmitted to host computer.	*CHECK HOST CABLES*	Verify the host computer cables are plugged firmly into the correct jacks. See Installation Chapter of the Reference manual.
SEC CBC CALIBRATION TABLE FULL	Secondary CBC calibration completed 60 samples; attempt made to run another sample.	*CLEAR TABLE* *CLEAR TABLE/ RERUN TEST*	1. Clear the table (delete 60 sample table). 2. Reselect the appropriate mode of operation to rerun the desired test.
SEND TO INSTRUMENT FAILED - 196CODE	Transmission of 196 code from DMS to instrument failed. The system locked up.	*RESET THE SYSTEM*	Reset the system.
SERVICE REPRODUCIBILITY TABLE FULL	Service Reproducibility cycle completed 60 samples; attempt made to run another sample.	*CLEAR TABLE* *CLEAR TABLE/ RERUN TEST*	1. Clear the table (delete 60 sample table). 2. Reselect the appropriate mode of operation to rerun the desired test.
SHEATH PRESSURE OUT OF RANGE	Sheath pressure out of established operating range. Range is 5.80 to 6.20 psi.	*CHECK/ADJUST SHEATH PRESSURE*	1. Perform System Test to check the sheath pressure. See the customer's Special Procedures and Troubleshooting manual. 2. Adjust the sheath pressure. See the customer's Special Procedures and Troubleshooting manual.
SHEATH TANK EMPTY	Sheath tank is empty.	*CHECK/PRIME DILUENT*	1. Check the sheath tank and tubing for any obvious problems. 2. Prime the diluent. See the customer's Special Procedures and Troubleshooting manual.
SHUTDOWN PERFORMED PREVIOUSLY	Attempt made to select sample mode through F3-Run window before Startup cycle performed. (Shutdown cycle performed previously and DMS software disabled sample cycles. Startup cycle must be performed.)	*MUST PERFORM STARTUP*	1. Run Startup. See Operator's Guide. 2. Select the desired mode to run tests.
SOFTWARE AUTOLOADER CHECK FAILED **Note:** Applicable to HmX analyzer with Autoloader module only.	When Startup initiated, Autoloader module failed at least one of checks performed.	*PERFORM AUTOLOADER TEST ROUTINE*	Run the Autoloader Test function. See the customer's Special Procedures and Troubleshooting manual.

Table 7.1-8 System Error Messages - S *(Continued)*

Error Message	Probable Cause	Action Message	Corrective Action
STOP SWITCH ACTIVATED **Note:** Applicable to HmX analyzer with Autoloader module only.	Stop switch activated when Autoloader module not in Stop mode.	*RESELECT FUNCTION*	Access the appropriate screen and reselect desired function. Ensure the switch cable is not disconnected.
SYSTEM BACKGROUND TIME OUT	Instrument did not respond to background request in specified time.	*CHECK DIGIBOARD*	Call your Beckman Coulter Representative. **Service only**: Check the Digiboard cables for proper connection.

Table 7.1-9 System Error Messages - T

Error Message	Probable Cause	Action Message	Corrective Action
TEMP: AMBIENT=XX.XX LYSE=XX.XX **Note:** XX.XX = actual reading.	The system temperature error occurred.	*CYCLE NEXT SPECIMEN*	Run next sample cycle.
TEMP: AMBIENT=XX.XX LYSE=XX.XX **Note:** XX.XX = actual reading.	Peltier module error occurred. XX.XX = actual ambient and lyse readings.	*PERFORM CBC ONLY*	Run CBC sample with DIFF OFF.
TEST MODE INTERRUPTED	The system put into Stop mode before requested number of aspirations per tube completed.	*RESTARTING TEST WILL ASP # SELECTED*	Restart the test. Aspiration count begins at selected number.
TKT.CFG FILE I/O ERROR	An input/output error occurred on TKT.CFG file. The system locked up.	*RESET THE SYSTEM*	Reset the system.
TRANSMIT FAILED - 196 CODE	Transmission of 196 code from DMS to instrument failed. The system locked up.	*RESET THE SYSTEM*	Reset the system.
TRANSMIT FAILED - 376 CODE	Transmission of 376 code from DMS to instrument failed. The system locked up.	*RESET THE SYSTEM*	Reset the system.
TRANSMIT FAILED - DILUTER TABLE	Transmission of diluter table from DMS to instrument failed. The system locked up.	*RESET THE SYSTEM*	Reset the system.
TRANSMIT PORT NOT AVAILABLE	Transmit port not available for transmission between DMS and instrument.	*CHECK SYSTEM CABLES*	Verify the cables are plugged firmly into the correct jacks. See Installation Chapter of the Reference manual.
TRANSMIT TO 376 FAILED - 196 CODE	Transmission of 196 code from DMS to instrument failed. The system locked up.	*RESET THE SYSTEM*	Reset the system.
TUBE AVAILABLE SENSOR ERROR **Note:** Applicable to HmX analyzer with Rotary Cap-Pierce module only.	Tube-available sensor may be faulty.	*REFER TO MANUAL FOR HELP*	1. Clean the tube available sensor. See the customer's Special Procedures and Troubleshooting manual. 2. If error recurs, call your Beckman Coulter Representative.

Table 7.1-10 System Error Messages - U

Error Message	Probable Cause	Action Message	Corrective Action
UNABLE TO OPEN/ READ 196CODE.HEX	DMS download code not able to open/read 196CODE.HEX file and retrieve 196 code revision number. The system locked up.	*RESET THE SYSTEM.*	Reset the system.
UNABLE TO OPEN/ READ 376CODE.HEX	DMS download code not able to open/read 376CODE.HEX file and retrieve 376 code revision number. The system locked up.	*RESET THE SYSTEM.*	Reset the system.
UNABLE TO OPEN/ READ DILUTER TBL	DMS download code not able to open/read DILUTE.TBL file and retrieve diluter table revision number. The system locked up.	*RESET THE SYSTEM.*	Reset the system.
UNABLE TO PROCESS REQUEST	DMS could not process requested function because a MODE-NOT-ACCEPTED or START-NOT-ACCEPTED signal received from instrument.	*RETRY THE FUNCTION*	1. Press F9 **Stop** to verify the mode was not previously selected. 2. Reselect the desired function.
UNIDENTIFIED ERROR [XXXX] **Note:** IXXX = instrument internal code; SXXX = sample handler internal code.	Internal and unidentifiable instrument error with no message detected by CPU. The system locked up.	*RESET THE SYSTEM.*	Reset the system.
UNIDENTIFIED S44 ERROR **Note:** Applicable to HmX analyzer with Autoloader module only.	Failure in tube-available switch. Probably due to: • Poor contacts. • A very narrow tolerance of switch contact within "walks" along rocker bed. • Slippage of cassette during indexing. Possibly due to switch failure.	Internal code only.	Call your Beckman Coulter representative. **Service only:** Inspect the switch and repair if necessary.
UNIDENTIFIED S45 ERROR **Note:** Applicable to HmX analyzer with Autoloader module only.	Failure in tube-available switch after indexing and detection of last tube in cassette. Probably due to: • Poor contacts. • A very narrow tolerance of switch contact within "walks" along rocker bed. • Slippage of cassette during indexing.	Internal code only.	Call your Beckman Coulter representative. **Service only:** Inspect the switch and repair if necessary.

Table 7.1-10 System Error Messages - U *(Continued)*

Error Message	Probable Cause	Action Message	Corrective Action
UNIDENTIFIED S55 ERROR	Over-allocation of all available software timers.	Internal code only.	If error occurs frequently, determine frequency of error and call your Beckman Coulter Representative.
UNIDENTIFIED S57 ERROR	False interrupt associated with either door or stop switches on Sample Handler. • Could be due to noise associated with twisted pair wires or connector on cable attached to stop switch. • Less likely due to any electrical noise induced into C196 microprocessor's external interrupt pin.	Internal code only.	Call your Beckman Coulter Representative. **Service only:** Ensure integrity of door and stop connections.
UNLOAD ELEVATOR FAILURE **Note:** Applicable to HmX analyzer with Autoloader module only.	Unload (left) elevator not functioning. Unload elevator's motor may have failed.	*CHECK ELEVATOR MECHANISM*	Verify performance of the elevator mechanism. See the customer's Special Procedures and Troubleshooting manual.
UNLOAD STACK FULL **Note:** Applicable to HmX analyzer with Autoloader module only.	Unloading bay reached maximum capacity.	*EMPTY THE UNLOAD STACK*	Remove the cassettes from the unloading bay so additional cassettes can be dispensed from the rocker bed.

Table 7.1-11 System Error Messages - V through Z

Error Message	Probable Cause	Action Message	Corrective Action
WASTE CONTAINER FULL	Waste container is full.	*EMPTY WASTE CONTAINER*	**WARNING** Biohazardous contamination could occur from contact with the old waste container and its associated tubing if not handled with care. Wear protective gear. Avoid skin contact. Clean up spills immediately. Dispose of the contents of the waste container according to your local regulations and acceptable laboratory procedures. Empty the waste container, then resume operation. Check that the harness is connected to the waste pickup tube. See the customer's Special Procedures and Troubleshooting manual.
WATER TRAP DID NOT BLEED [XX.XX] **Note:** XX.XX = actual reading.	Water trap bleed solenoid activated, but pressure did not drop in specified time.	*CONTACT SERVICE*	Call your Beckman Coulter Representative.
WBC BATH OVERFLOW	WBC bath overflowed.	*CHECK ERROR LOG AND FLUIDICS*	See the customer's Special Procedures and Troubleshooting manual.
WHITE A/I/V OUT OF RANGE	White aperture current voltage (A/I/V) not within established operating range. Range is 100.6 to 129.6 V.	*PERFORM SYSTEM TEST*	1. Perform System Test to confirm the problem. See the customer's Special Procedures and Troubleshooting manual. 2. If the white A/I/V is still out of range, call your Beckman Coulter Representative.
WORKLIST ERRORS NOT CLEARED	Three consecutive *NO READ* or *NO MATCH* errors, or 10 total *NO READ*, *NO MATCH* or *PART ASP* errors occurred and are stored in Worklist file.	*CLEAR ERRORS/ CHECK LABELS/ RESTART* *CLEAR ERRORS/ CHECK WLIST/ RESTART*	1. Check the labels for proper positioning, and check the worklist for *NO MATCH* errors. 2. Delete one or more samples associated with the errors from the worklist. 3. Restart the system.
WORKLIST FULL	Maximum number of preassigned samples (300) and worklist errors (10) exceeded.	*RUN SAMPLES*	Remove some samples with errors, or clear the worklist by running samples.
WRONG DIGIBOARD SOFTWARE	Digiboard incorrectly installed or faulty.	*CHECK DIGIBOARD*	Call your Beckman Coulter Representative.
WRPORT UNAVAIL FOR 376 CODE	Analyzer not communicating with Digiboard. The system locked up.	*RESET THE SYSTEM*	Reset the system.

Table 7.1-12 Internal Instrument Codes

Code	Description	Code	Description
70	Strange response/command from monitor.	92	Analysis start error (no memory).
71	Strange response/command from program control.	93	Analysis end error (undefined).
72	Strange response/command from analysis.	95	Lyse temperature error (warning).
73	Strange response/command from VCS acquisition.	96	Compressor error.
74	Strange response/command from CBC acquisition.	98	Too much pressure lost in acquisition.
75	Bad response/command from DMS.	99	High vacuum below 10 in. Hg.
76	DMS timeout error.	100	FC flow cell clog.
78	Specified control program does not exist.	101	PC1 flow cell clog.
79	Bad parameter for mode or table.	102	PC2 flow cell clog.
80	Illegal instruction in control program.	103	RBC voteout one sample.
81	Errors in execution control program.	104	WBC voteout one sample.
82	Bad sample handler super program error.	105	Platelet voteout one sample.
84	Tube bar-code error.	106	MPV voteout one sample.
85	Request bar code verification.	107	FD flow cell clog.
86	Bad sample handler command (prompt).	108	PC3 flow cell clog.
87	Bad sample handler response.	110	Sample handler error aborted.
88	Bad sample handler sensor/mechanism.	111	Sample handler prompt aborted.
90	CBC start error (no memory).	112	Unloading bay is full.
91	VCS start error (no memory).		

7.2 FLOW-CELL ERRORS *FC*, *PC1*, AND *PC2*

The three flow-cell errors, *FC* (Full Clog), *PC1* (Partial Clog 1), and *PC2* (Partial Clog 2), are displayed on the DMS Run Sample screen, immediately below the WBC scatterplot. For all three errors, the diff parameter results (both % and #) are replaced with the (:::::) code.

PC1 and *PC2* are based on the DC count and time. *FC* is triggered by a special circuit, the Clog Detector, on the RF/DC Detector Preamp. See Table 7.2-1 for the specific conditions that trigger a flow-cell error and a list of typical causes.

Table 7.2-1 Flow-Cell Errors

Error	Condition	Typical Causes
FC	Overvoltage is detected in the RF/DC current in the flow cell. (The current is not flowing correctly between the two electrodes in the flow cell.) **Note:** When an *FC* error occurs, the RF/DC current is turned off. When an *FC* is detected, the instrument stops the cycle and starts an autoclear. if the *FC* error is not cleared after three attempts, the instrument stops.	1. Particulate matter plugging flow cell. 2. Interruption in RF/DC aperture current from: • Bubbles. • Open circuit. • Coaxial cable problems. 3. Defective RF tube inside the RF/DC Detector Preamp card. 4. Incorrectly adjusted Clog Detector circuit. To adjust the circuit, refer to Clog Detector Circuit Adjustment under Heading 4.11, RF DETECTOR PREAMP CARD ADJUSTMENTS. 5. Failure of the Clog Detector circuit.
PC1	The following conditions must exist to generate a *PC1* error: • The WBC is >1K and <56K. • The DC count time exceeds the expected count time by greater than 50% where - [(7000/WBC) x 10 = Expected Time]. For example, if the count time for a WBC of 7,000 is >15 s (which is 50% more than the expected 10 seconds), a PC1 occurs. When *PC1* is detected three times consecutively, the instrument initiates an autoclear routine at the end of the third cycle. However, due to the overlap of instrument cycles, the autoclear routine does not actually occur until the end of the fourth cycle.	1. Obstructed sample line to flow cell. 2. Partially plugged flow cell. 3. Sample pressure too low (flow not fast enough). 4. Sheath pressure too high (sample flow restricted).

Table 7.2-1 Flow-Cell Errors *(Continued)*

Error	Condition	Typical Causes
PC2	The following conditions must exist to generate a *PC2* error: • The WBC is >1K and <56K. • Either 8192 cells accumulate within ≤1.0 second or zero (0) cells accumulate within 1.0 second. When *PC2* is detected, the instrument initiates an autoclear routine at the end of the cycle. However, due to the overlap of instrument cycles, the autoclear routine does not actually occur until the end of the next cycle.	1. Obstructions in the lower sheath input (sample rushes through the flow cell). 2. Chemistry imbalance caused by: • Incorrect Erythrolyse II reagent, StabiLyse reagent, and/or blood-sample volumes. • Incorrect Erythrolyse II reagent, StabiLyse reagent, and/or blood sample delivery. • Incorrect mixing in the mixing chamber. • Incorrect rinsing and/or draining at mixing chamber. • Interferences in the blood specimen, such as: ▸ Lipemia. ▸ Extreme chemistry imbalances. ▸ Drugs. • Condition of reagents, such as: ▸ Diluent frozen and improperly mixed after thawing. ▸ Reagents contaminated. ▸ Reagents outdated.

7.3 DC, RF, OR LS NOISE PROBLEMS

Purpose

Use this procedure to locate the problem when the RMS noise checks for RF, DC, or LS are out of specifications.

Tools/Supplies Needed

- ❑ Service Disk
- ❑ 20 MHz dual-trace oscilloscope
- ❑ True RMS meter
- ❑ Diluent for cycling

DC Noise Troubleshooting Checks

1. Activate the service options as directed under Heading 4.2, USING THE SERVICE DISK.
2. Connect Channel 1 of the oscilloscope to the channel on the VCS PROCESSOR card.
3. Set the V/div to the 20-mV scale.
4. Set the scope's trigger source to Ch 1.
5. While the system is idle, step through the time base settings from 5 millisecond/div through 20 microseconds/div. At each setting, vary the trigger level and look for periodic waveforms. See Figures 7.3-1 and 7.3-2 for examples of acceptable and unacceptable static DC noise. Repeat if necessary.

Figure 7.3-1 Acceptable DC Noise Display

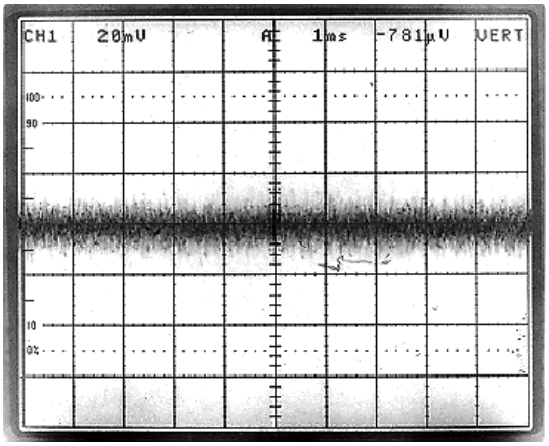

Figure 7.3-2 Unacceptable DC Noise Display

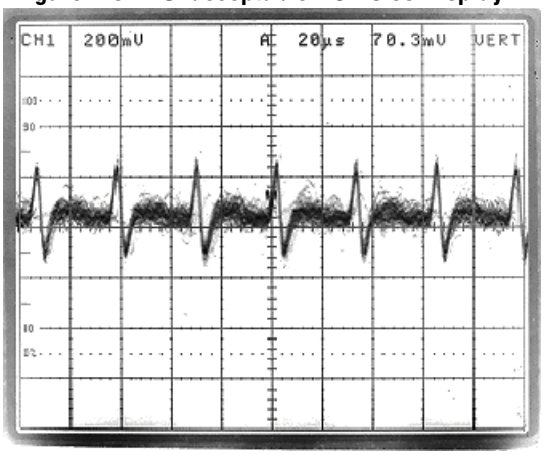

6. If you see any periodic waveforms, find and eliminate the cause.
7. Set the scope's trigger source to LINE and repeat steps 5 and 6.
8. Set the scope's trigger source back to Ch 1.
9. Cycle a sample of clean diluent in the Diff-Latex Calibration mode.
10. While the system is counting, step through the time base settings from 5 milliseconds/div through 20 microseconds/div. At each setting, vary the trigger level and look for periodic waveforms. See Figures 7.3-1 and 7.3-2 for examples of acceptable and unacceptable dynamic DC noise. Repeat if necessary.

11. If you see any periodic waveforms, find and eliminate the cause.
12. Set the scope's trigger source to LINE and repeat steps 9 through 11.
13. If you corrected a noise problem, do the Diff and Retic RMS Noise Checks under Heading 4.12, RMS NOISE CHECKS, to verify the DC, RF and LS noise levels are within specifications.
14. If you did not correct the noise problem, continue troubleshooting. Go to RF Noise Troubleshooting Checks below.

RF Noise Troubleshooting Checks

1. Connect Channel 1 of the oscilloscope to the channel on the VCS PROCESSOR card.
2. Set the V/div to the 50-mV scale.
3. Set the trigger source to Ch 1.
4. While the system is idle, step through the time base settings from 5 milliseconds/div through 20 microseconds/div. At each setting, vary the trigger level and look for periodic waveforms. See Figures 7.3-3 and 7.3-4 for examples of acceptable and unacceptable static RF noise. Repeat if necessary.
5. If you see any periodic waveforms, find and eliminate the cause.
6. Set the scope trigger source to LINE and repeat steps 4 and 5.
7. Set the trigger source back to Ch 1.

Figure 7.3-3 Acceptable Static RF Noise Display

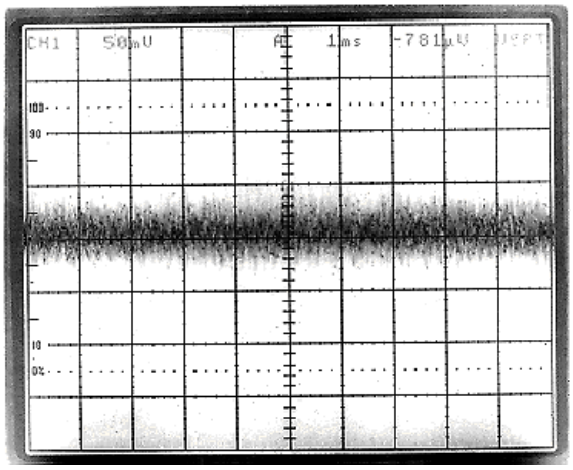

Figure 7.3-4 Unacceptable Static RF Noise Display

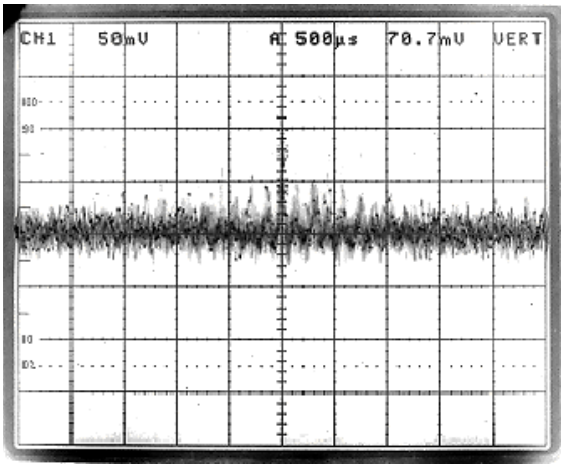

8. Cycle a sample of clean diluent in the Diff-Latex Calibration mode.
9. While the system is cycling, step through the time base settings from 5 milliseconds/div through 20 microseconds/div. At each setting, vary the trigger level and look for periodic waveforms. See Figure 7.3-5 for an example of acceptable dynamic RF noise. Repeat if necessary.

Figure 7.3-5 Acceptable Dynamic RF Noise

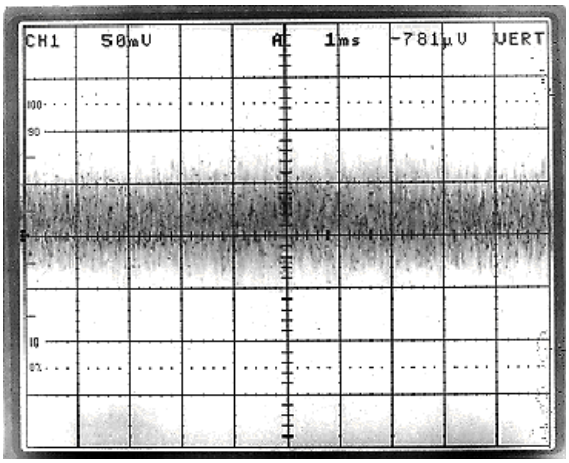

10. If you see any periodic waveforms, or if the noise level is above specifications:
    a. Ensure C1 is adjusted correctly. Refer to C1 Adjustment under Heading 4.11, RF DETECTOR PREAMP CARD ADJUSTMENTS.
    b. Using Table 7.3-1 and Figures 7.3-6 through 7.3-16 as troubleshooting aids, find and eliminate the cause of the noise.
11. If you corrected a noise problem, do the Diff and Retic RMS Noise Checks under Heading 4.12, RMS NOISE CHECKS, to verify the DC, RF and LS noise levels are within specifications.
12. If you did not correct the noise problem, continue troubleshooting. Go to LS Noise Troubleshooting Checks at the end of this section.

Table 7.3-1 RF Troubleshooting Table

Sample Type*	Problem	Cause	Action	See Figures…
Diluent	60 Hz	Loose grounds	Check grounding	7.3-6 and 7.3-7
LATRON Control	Random baseline bounce	Fluidics leaks or bubbles	Fix leaks or perform purge	7.3-8 and 7.3-9
Diluent	RMS noise (mV) 38 <RF <100	RF Preamp noise	Check C1 Adjust Replace: 1. Vacuum tube 2. RF Preamp	7.3-10 and 7.3-11
Diluent	RMS noise (mV) RF >100 random or continuous	RF Preamp noise	Replace: 1. Vacuum tube 2. RF Preamp	7.3-10 through 7.3-14
Diluent	RMS noise (mV) RF >100 random	Shunts or leaky flow cell	Clean QD7 Perform: Purge	7.3-15 and 7.3-16

* Obtain all samples in the Diff-Latex Calibration mode.

Figure 7.3-6 RF 60 Hz

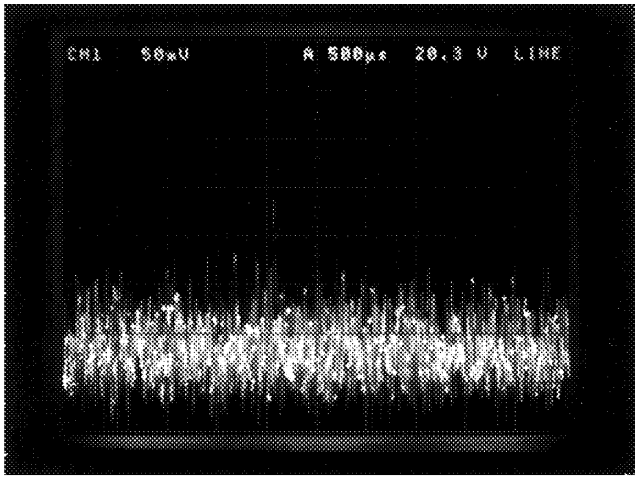

5915227F

Figure 7.3-6 is an example of a normal LATRON control run. The RMS noise is 22.0 mV. Notice the RF base.

Figure 7.3-7 RF 60 Hz with Noise Spikes

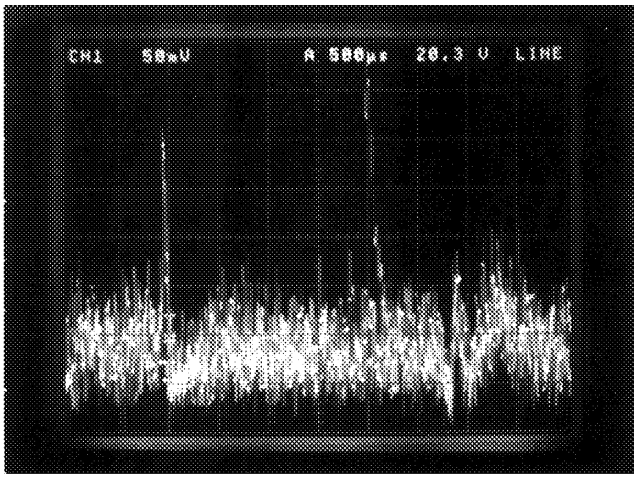

5915228F

In Figure 7.3-7, notice with the 60 cycles the large spikes and how the baseline is distorted. The RMS noise increased to 63 mV.

Figure 7.3-8 Normal RF Random Baseline Bounce

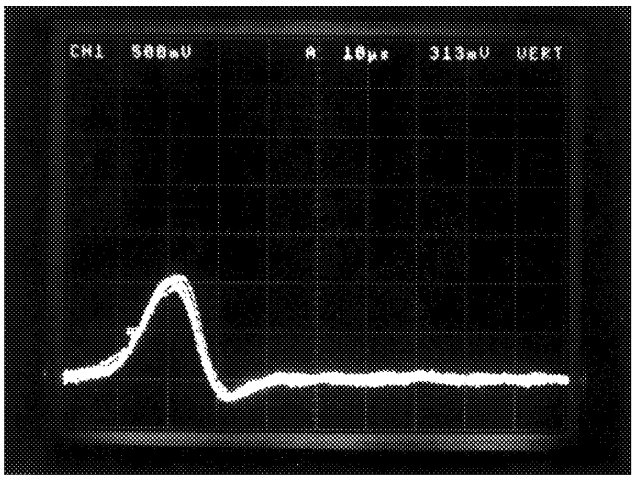

5915229F

Figure 7.3-8 is an example of a normal LATRON control run. The RMS noise is 22.0 mV. Notice the baseline after the RF pulse.

Figure 7.3-9 RF Output with bubble Trapped in Sheath 2

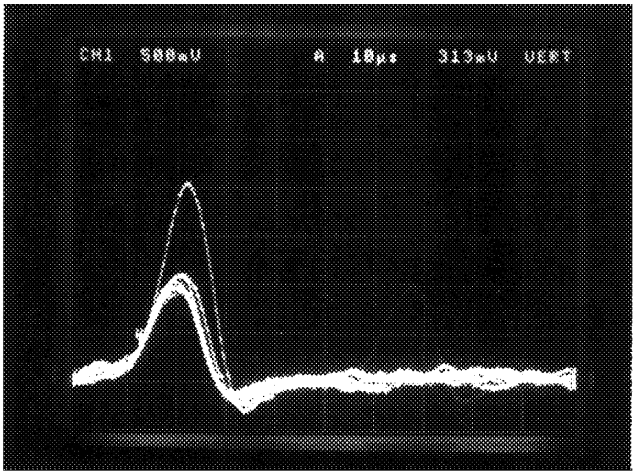

5915230F

Figure 7.3-9 shows the RF output while running LATRON control with a bubble trapped in sheath 2. The RMS noise increased to 24.5 mV. Notice the bounce in the baseline after the RF pulse.

Note: The single pulse with the doubled amplitude is caused by two LATRON control particles simultaneously passing through the flow cell.

Figure 7.3-10 Normal RF Baseline While Cycling Diluent

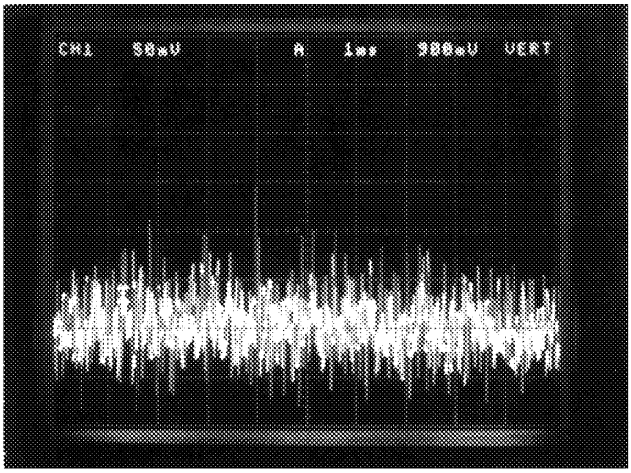

5915231F

Figure 7.3-10 shows a normal RF baseline while cycling diluent. The RMS noise is 22.0 mV.

Figure 7.3-11 Noisy RF Baseline While Cycling Diluent

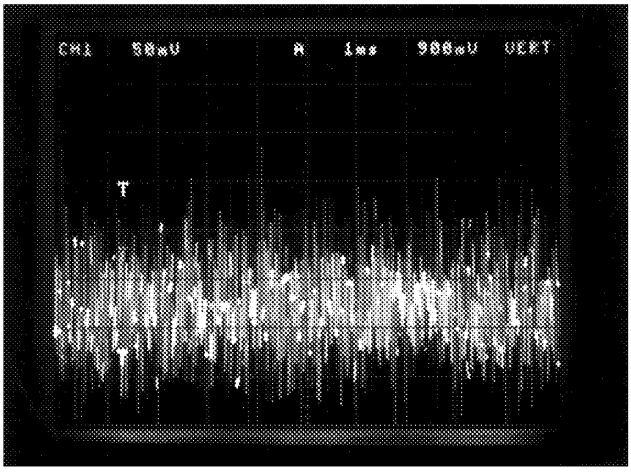

5915232F

Figure 7.3-11 shows a noisy RF baseline while cycling diluent; the RMS noise is now 45 mV. Notice the amplitude increased in the baseline. In this case the RMS noise is steady.

Figure 7.3-12 Noisy RF Baseline While Cycling Diluent (RF Noise >100 mV)

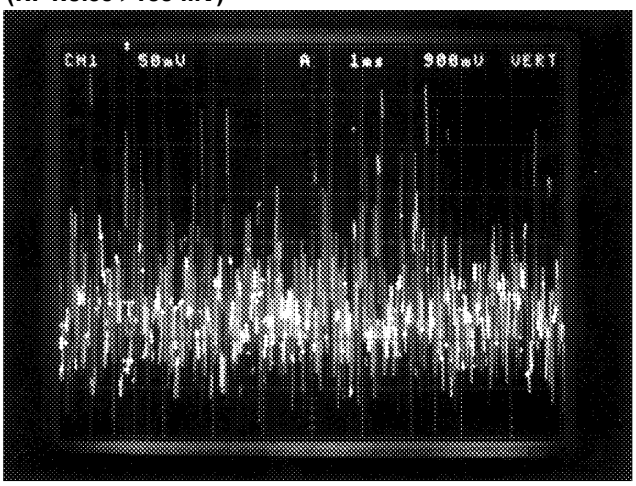

5915234F

Figure 7.3-12 shows a noisy RF baseline while cycling diluent; the RMS noise is now >100 mV and erratic. Notice the amplitude increased in the baseline. In this case the RMS noise is unsteady as is the baseline.

Figure 7.3-13 LATRON Control Sample with a Good RF Tube and Box

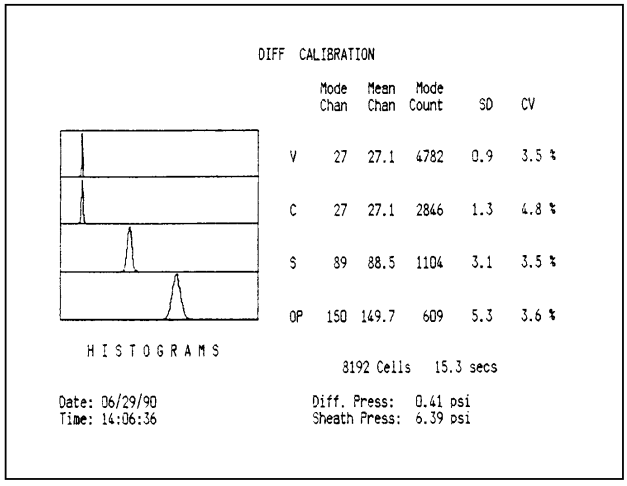

Figure 7.3-13 is a LATRON control sample from a system with a good RF tube and box. Notice the mean-to-mode channel difference, the low CV and the narrow histogram.

Figure 7.3-14 LATRON Control Sample with a Bad RF Tube and Box

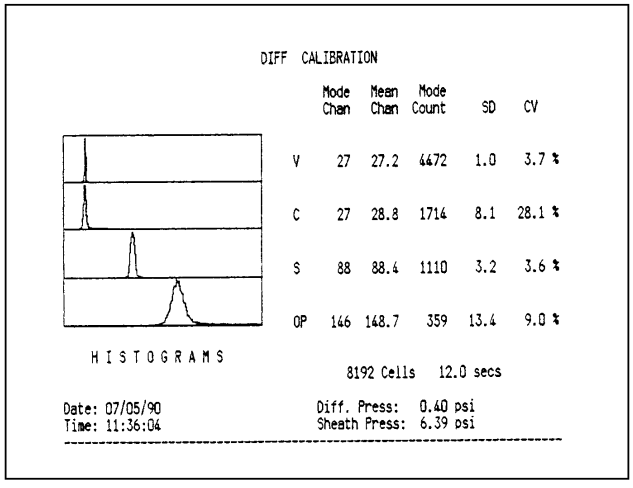

5915236F

In the LATRON control sample shown in Figure 7.3-14 the RF tube is bad, but the box can cause the same problem.

The mean-to-mode difference increased, as well as the CV. Also the histogram now has a foot to the right. In addition, the OP histogram is wider and not as smooth.

Figure 7.3-15 RF Output Running LATRON Control (Leak at QD7)

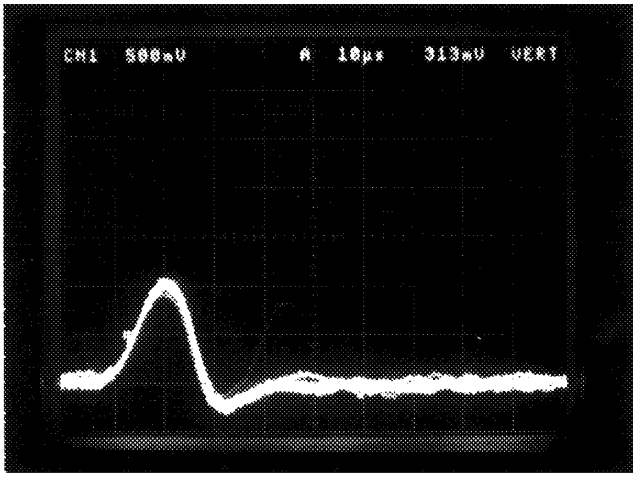

5915237F

Figure 7.3-15 shows the RF output while running LATRON control with a leak at QD7. The RMS noise increased to 23.5 mV. Notice the bounce in the baseline after the RF pulse.

Figure 7.3-16 LATRON Control Run with DC Gain Drop

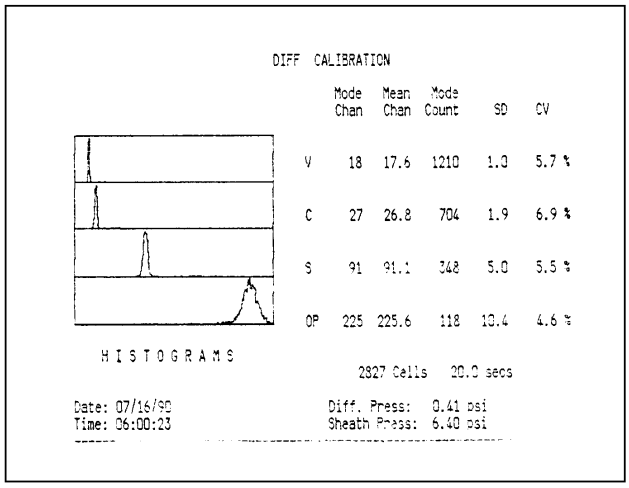

5915238F

In the LATRON control run shown in Figure 7.3-16, observe the DC gain drop. The CV for both DC and RF increased. And, on all channels there is noise to the right of the LATRON control populations. The OP histogram too is wider, shifted to the right and not as smooth.

LS Noise Troubleshooting Checks

WARNING The laser beam can cause eye damage if viewed either directly or indirectly from reflective surfaces (such as a mirror or shiny metal surface). Ensure the laser cover is on and the front doors of the Main Unit are closed while you do the LS Noise Troubleshooting Checks.

1. Ensure the laser cover is on and the front doors of the Main Unit are closed.
2. Cycle a sample of diluent in the Diff-Latex Calibration mode.
3. While the system is counting, measure the LS offset voltage with a DMM and ensure that the voltages do not exceed the limits specified for Diff mode in Table A.1-19, LS Offset Voltage.

4. If the LS offset voltage exceeds the limits:
   a. Clean the flow cell as directed under Heading 4.13, FLOW-CELL CLEANING.
   b. If you still cannot achieve the specifications, realign the laser/flow cell as directed under Heading 4.15, LASER/FLOW CELL ALIGNMENT.
5. Cycle a sample of diluent in the Retic-Latex Calibration mode and repeat step 3.
6. Set up the oscilloscope:
   a. Connect Channel 1 of the oscilloscope to the LS channel (S) on the VCS PROCESSOR card.
   b. Set the V/div to the 20-mV scale
   c. Set the trigger source to Ch 1.
7. Ensure that the Diff mode is enabled.
8. While the system is idle, step through the time base settings from 5 milliseconds/div through 20 microseconds/div. At each setting, vary the trigger level and look for periodic waveforms. See Figures 7.3-17 and 7.3-18 for examples of acceptable and unacceptable static LS noise. Repeat if necessary.

Figure 7.3-17 Acceptable Static LS Noise Display

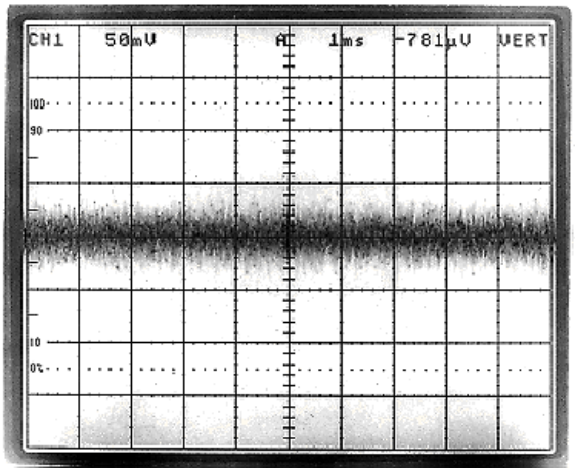

Figure 7.3-18 Unacceptable Static LS Noise Display

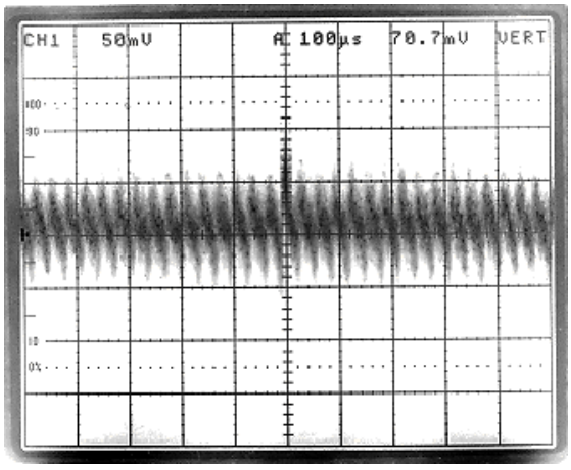

9. If you see any periodic waveforms, find and eliminate the cause.

   Note: When the time base is set at 20 microseconds/div, a 25-kHz waveform may be observed on some instruments. This can be caused by the Laser Power Supply.
10. Set the scope's trigger source to LINE. Repeat steps 8 and 9.
11. Set the scope's trigger source back to Ch 1.
12. Cycle a sample of diluent in the Diff-Latex Calibration mode.
13. While the system is counting, step through the time base settings from 5 milliseconds/div through 20 microseconds/div. At each setting, vary the trigger level and look for periodic waveforms. See Figure 7.3-19 for an example of acceptable dynamic LS noise.

Figure 7.3-19 Acceptable Dynamic LS Noise Display

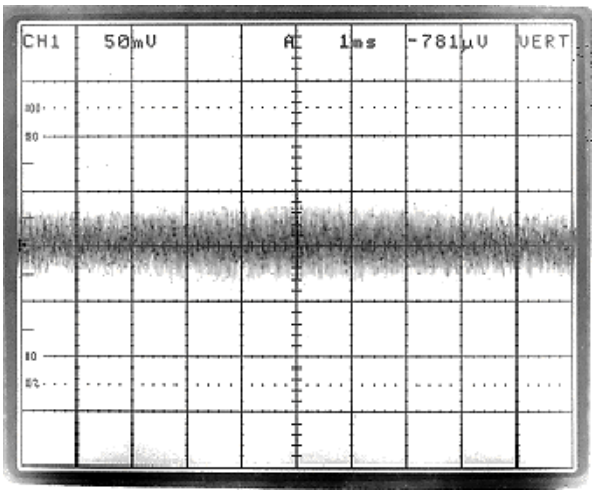

14. If you see any periodic waveforms, find and eliminate the cause.

    Note: When the time base is set at 20 microseconds/div, a 25-kHz waveform may be observed on some instruments. This can be caused by the Laser Power Supply.

15. Set the scope's trigger source to LINE. Repeat steps 12 through 14.
16. After correcting the noise problem, do the Diff and Retic RMS Noise Checks under Heading 4.12, RMS NOISE CHECKS, to verify the DC, RF and LS noise levels are within specifications.

7.4 DC, RF, OR LS LATEX CALIBRATION PROBLEMS

Use Table 7.4-1 to locate the problem when you cannot obtain acceptable DC, RF, or LS results during diff and retic latex calibration. When you have corrected the problem, repeat the DC, RF, and LS gain adjustments as directed in Diff and Retic Latex Calibration and Verification under Heading 4.4, LATEX CALIBRATION AND VERIFICATION.

Table 7.4-1 RF, DC, or LS Latex Calibration Troubleshooting Table

Problem	Probable Cause	Action
DC CVs are outside the specifications.	1. Plugged sheath restrictor tubing. 2. Flow cell (sheath and sample) pressure settings are not optimal.	1. Replace the sheath 2 restrictor tubing. 2. Adjust the sheath pressure regulator and cycle LATRON control until you obtain the minimum CVs for DC. 3. Readjust the sample pressure as directed for Sample Pressure Adjustment under Heading 4.10, VCS FLOW-RATE ADJUSTMENT.
DC and/or RF mean-to-modes are outside the specifications.	Plugged sheath restrictor coil.	Check the sheath 2 restrictor coil for a plug.
LS CVs or mean-to-modes are outside the specifications.	1. Noise on the LS channel. 2. Dirty flow cell. 3. Misaligned laser/flow cell.	1. Measure the R 2. MS noise as directed in Diff and Retic RMS Noise Checks under Heading 4.12, RMS NOISE CHECKS. 3. Check the LS offset voltage as directed in LS Offset Voltage Check under Heading 4.23, VOLTAGE CHECKS AND ADJUSTMENTS. 4. If the problem persists, clean the flow cell as directed under Heading 4.13, FLOW-CELL CLEANING. 5. If the problem still persists, align the flow cell as directed under Heading 4.15, LASER/FLOW CELL ALIGNMENT.
RF CVs are outside the specifications.	Noise on the RF channel.	1. Measure the RMS noise as directed in Diff and Retic RMS Noise Checks under Heading 4.12, RMS NOISE CHECKS. 2. Replace the vacuum tube in the RF Detector Preamp card. 3. Replace the RF Detector Preamp card.

7.5 REPORTED INSTRUMENT PROBLEMS AND SOLUTIONS

The suggestions in Table 7.5-1, Troubleshooting Reported Instrument Problems, are meant as a guideline only, and are not necessarily the solution for the same reported symptoms.

Table 7.5-1 Troubleshooting Reported Instrument Problems

Problem	Symptom	Corrective Action
Bar-code reader not reading cassette and tube bar-code labels.	The bar-code reader does not turn on. All other functions are working correctly. **Note**: This problem usually occurs after a power interruption.	1. Power down and power up the instrument as directed in Power Down/Power Up the System under Heading 4.1, GUIDELINES FOR SERVICING THE HmX ANALYZER, to reset the Bar-Code Reader Decoder card. 2. Reconfigure the Bar-Code Reader Decoder card as directed under Heading 4.38, BAR-CODE READER DECODER CARD CONFIGURATION, if necessary.
Download stops after 376 code	The instrument downloads the 376 code and stops three times in succession. Then the instrument generates a *DOWNLOAD NOT SUCCESSFUL* message and an *INSTRUMENT REPLY TIMEOUT* message.	1. Ensure the Secondary-mode, whole-blood switch is not stuck. 2. Repair or replace the whole-blood switch, S2.
Lockups	Download not successful and WBC, RBC or Plt report 0.00	1. Ensure the jumpers on the R/W/P PROC card are set as described in Table A.2-8, R/W/P PROC Card Jumper Settings (See Figure A.2-10). 2. Reinstall the R/W/P PROC card, ensuring it is seated correctly. 3. If problem persists, reseat U11 and U13 on the R/W/P PROC card. 4. Replace the R/W/P PROC card if necessary.
Lockups - excessive and unexplained	Various	1. Verify the following circuit cards are at the revision level stated or higher: • R/W/P PROC card - L • I/O card - K • DILUTER INTERFACE card - J • 376 CPU card - N • VCS PROCESSOR card - F • DMS Digiboard - E 2. Verify the DMS motherboard and its revision level are approved. Refer to the DMS Configuration Listing for STKS™, MAXM™, AND HmX Series Systems.

Table 7.5-1 Troubleshooting Reported Instrument Problems *(Continued)*

Problem	Symptom	Corrective Action
Sample Analysis and Control Run screens are unavailable	The Sample Analysis and Control Run options are not listed and the DMS screen goes blank.	Reformat and reload the software as directed in the DMS Configuration Listing for STKS™, MAXM™, AND HmX Series Systems.
System Test does not work correctly	Some of the fields on the DMS screen for the System Test do not update. All other functions are working correctly.	1. Test the Digiboard with the Digiboard Diagnostics kit. 2. Replace the Digiboard if necessary.

8 PARTS LISTS, 8.1-1

8.1 MASTER PARTS LIST, 8.1-1

8.2 ILLUSTRATED PARTS, 8.2-1

ILLUSTRATIONS

8.2-1 Main HmX Hematology Analyzer Components Illustrated, 8.2-1
8.2-2 CBC Module, Front View (See Table 8.2-2), 8.2-2
8.2-3 CBC Module, Rear View (See Table 8.2-3), 8.2-4
8.2-4 Mixing Module, Front View (See Table 8.2-4), 8.2-6
8.2-5 Mixing Module, Right Side View (See Table 8.2-5), 8.2-8
8.2-6 Mixing Module, Left Side View (See Table 8.2-6), 8.2-10
8.2-7 BSV Module, Front View (See Table 8.2-7), 8.2-12
8.2-8 BSV Module, Rear View (See Table 8.2-8), 8.2-14
8.2-9 BSV Module, Ball and Slide Assembly (See Table 8.2-9), 8.2-16
8.2-10 Pump Module (See Table 8.2-10), 8.2-18
8.2-11 Rotary Cap-Pierce Module (See Table 8.2-11), 8.2-20
8.2-12 Rotary Cap-Pierce Module, Carousel Assembly (See Table 8.2-12), 8.2-22
8.2-13 Autoloader Module, Front View (See Table 8.2-13), 8.2-24
8.2-14 Autoloader, Rear View (See Table 8.2-14), 8.2-26
8.2-15 Autoloader, Rocker Bed Hardware and Sensors (See Table 8.2-15), 8.2-28
8.2-16 Needle Assembly and Sensors (See Table 8.2-16), 8.2-30
8.2-17 Triple Transducer Module (See Table 8.2-17), 8.2-32
8.2-18 Flow Cell and Laser Assembly (See Table 8.2-18), 8.2-34
8.2-19 Main Diluter Module (See Table 8.2-19), 8.2-36
8.2-20 Electronic Power Supply, Top View (See Table 8.2-20), 8.2-38
8.2-21 Pneumatic Power Supply, Left-Side View (See Table 8.2-21), 8.2-40
8.2-22 Analyzer Module, Card Cage Components (See Table 8.2-22), 8.2-42
8.2-23 Wire Harness Components (See Table 8.2-23), 8.2-44
8.2-24 Electrical Connectors, 8.2-46

TABLES

8.1-1 Part Categories, 8.1-1
8.1-2 Accessories, 8.1-1
8.1-3 Autoloader Module, 8.1-2
8.1-4 Bar-Code System, 8.1-4
8.1-5 BSV Module, 8.1-5
8.1-6 CBC Module, 8.1-7
8.1-7 Circuit Cards, 8.1-8
8.1-8 Covers/Doors, 8.1-9
8.1-9 Fuses, 8.1-9
8.1-10 Interconnect Cables, 8.1-10
8.1-11 Main Diluter Module, 8.1-11
8.1-12 Miscellaneous Hardware, 8.1-12
8.1-13 Mixing Module, 8.1-15
8.1-14 Options/Upgrade Kits, 8.1-16
8.1-15 Pickup Tubes and Sensors, 8.1-16
8.1-16 Power Supplies, 8.1-17
8.1-17 Pump Module, 8.1-18

8.1-18 Rotary Cap-Pierce Module, 8.1-19
8.1-19 Shielded Reagent Lines, 8.1-21
8.1-20 Software, 8.1-21
8.1-21 Tools and Supplies, 8.1-22
8.1-22 Triple Transducer Module, 8.1-23
8.1-23 Tubing, 8.1-25
8.2-1 Illustrations Not Referenced from Figure 8.2-1, 8.2-1
8.2-2 CBC Module, Front View (See Figure 8.2-2), 8.2-3
8.2-3 CBC Module, Rear View (See Figure 8.2-3), 8.2-5
8.2-4 Mixing Module, Front View (See Figure 8.2-4), 8.2-7
8.2-5 Mixing Module, Right Side View (See Figure 8.2-5), 8.2-9
8.2-6 Mixing Module, Left Side View (See Figure 8.2-6), 8.2-11
8.2-7 BSV Module, Front View (See Figure 8.2-7), 8.2-13
8.2-8 BSV Module, Rear View (See Figure 8.2-8), 8.2-15
8.2-9 BSV Module, Ball and Slide Assembly (See Figure 8.2-9), 8.2-17
8.2-10 Pump Module (See Figure 8.2-10), 8.2-19
8.2-11 Rotary Cap-Pierce Module (See Figure 8.2-11), 8.2-21
8.2-12 Rotary Cap-Pierce Module, Carousel Assembly (See Figure 8.2-12), 8.2-23
8.2-13 Autoloader Module, Front View (See Figure 8.2-13), 8.2-25
8.2-14 Autoloader, Rear View (See Figure 8.2-14), 8.2-27
8.2-15 Autoloader Module, Rocker Bed Sensors and Hardware (See Figure 8.2-15), 8.2-29
8.2-16 Autoloader Module Needle Assembly and Sensors (See Figure 8.2-16), 8.2-31
8.2-17 Triple Transducer Module (See Figure 8.2-17), 8.2-33
8.2-18 Flow-Cell and Laser Assembly (See Figure 8.2-18), 8.2-35
8.2-19 Main Diluter Module (See Figure 8.2-19), 8.2-37
8.2-20 Electronic Power Supply, Top View (See Figure 8.2-20), 8.2-39
8.2-21 Pneumatic Power Supply, Left-Side View (See Figure 8.2-21), 8.2-41
8.2-22 Analyzer Module, Card Cage Components (See Figure 8.2-22), 8.2-43
8.2-23 Wire Harness Components (See Figure 8.2-23), 8.2-45
8.2-24 Electrical Connectors, 8.2-46

8.1 MASTER PARTS LIST

The parts listed in this section are divided into tables by category. Within each table, the part numbers are listed in numeric order. Table 8.1-1 lists the categories and their table references.

Table 8.1-1 Part Categories

Category	Table	Category	Table
Accessories	8.1-2	Mixing Module	8.1-13
Autoloader Module	8.1-3	Options/Upgrade Kits	8.1-14
Bar-Code System	8.1-4	Pickup Tubes and Sensors	8.1-15
BSV Module	8.1-5	Power Supplies	8.1-16
CBC Module	8.1-6	Pump Module	8.1-17
Circuit Cards	8.1-7	Rotary Cap-Pierce Module	8.1-18
Covers/Doors	8.1-8	Shielded Reagent Lines	8.1-19
Fuses	8.1-9	Software	8.1-20
Interconnect Cables	8.1-10	Tools and Supplies	8.1-21
Main Diluter Module	8.1-11	Triple Transducer Module	8.1-22
Miscellaneous Hardware	8.1-12	Tubing	8.1-23

Table 8.1-2 Accessories

Part Number	Description	Figure	Item
4004269	Battery pack, 376 CPU		
4836885	IC Controller, DMA/Bus/Interrupt		
4836887	IC, memory, RAM		
6915320	Spare parts kit, customer accessories kit (for instruments with the Autoloader module)		
6915321	Spare parts kit, customer accessories kit (for instruments with the Rotary Cap-Pierce module)		
7000364	Neck support, cube, with wire tie		

Table 8.1-3 Autoloader Module

Part Number	Description	Figure	Item
1021292	Index motor hub	8.2-13	19
1021293	Pivot-link drive	8.2-13	14
1021296	Pin, pivot	8.2-15	1
1021300	Washer, needle home flag		
1021301	Pin, actuator, needle home flag		
1021302	Spring, index finger		
1021303	Return spring, cone sensor		
1021311	Actuator body, cone sensor	8.2-13	6
1021392	Spring, index ramp		
1021393	Plate, motor mount	8.2-13	7
1021412	Actuator sensor, cone sensor	8.2-13	3
1021569	Cassette shelf spring	8.2-13	5
1021597	Stud, locking, code wheel		
1021599	Lock wheel, rocker bed	8.2-13	9
1021600	Wheel, cassette shelf	8.2-13	1
1021601	Roller, cassette shelf	8.2-13	2
1021634	Guide, cassette platform	8.2-15	3
1021655	Bellows, needle	8.2-16	4
1021727	Spring, latch cassette		
1022099	Bellows, retainer	8.2-16	10
1022161	Guide, cassette bed	8.2-15	7
1022191	Clip, retaining, cassette position opto switch		
1022376	Tube, forward sensor spring arm		
1022462	Tube, forward sensor arm	8.2-16	7
1022607	Tube-ram insert (button)		
2429923	Label, bar-code, cassette sequencing #		
2523682	Bushing, flanged, for rocker bed		
2523683	Rod bearing, right	8.2-13	13
2523684	Rod bearing, left	8.2-13	15
2523693	Spring, needle home flag		
2804083	Screw, rocker motor hub	8.2-13	17
2851227	Screw, index hub shoulder	8.2-13	20
2851231	E-clip, index finger		
2851702	Holder, LED		
2851722	Tip, tube ram (use with tube-ram insert [button] PN 1022607)	8.2-13	4

Table 8.1-3 Autoloader Module *(Continued)*

Part Number	Description	Figure	Item
2851892	Washer, spring	8.2-15	10
4836872	LED, green		
5104102	Switch, STOP		
6027284	Clamp, wire tie		
6028262	Cable, ground, 8 in.		
6028263	Cable, ground, 13 in., E53 to E18		
6028264	Cable, ground, 6 in., E18		
6028267	Cable, ground, 16 in., E53 to E25		
6028385	Cable, ribbon, flat, Autoloader	8.2-14	5
6232208	Fitting, elbow, code wheel cylinder		
6232214	Fitting, elbow, code wheel cylinder		
6232376	Solenoid valve, SMC, 5-way	8.2-14	2
6232568	Solenoid manifold, SMC, dual bank	8.2-14	7
6232597	Cylinder, tube ram	8.2-14	6
6232601	Cylinder, tube return	8.2-16	8
6232620	Cylinder, needle	8.2-16	6
6232999	Cylinder, air, with magnet	8.2-16	12
6605294	Cassette, 16 mm (one each)		
6605295	Cassette kit, 10/13 mm (five each)		
6806247	Sensor, Hall effect (for Autoloader module only)	8.2-16	11
6858381	Encoder disk	8.2-13	8
6858383	Link drive	8.2-13	22
6858390	Index finger		
6858408	Flag, lower platform		
6858413	Slide, rack ball	8.2-14	4
6858474	Hub, pivot, rocker motor	8.2-13	16
6858476	Dead plate	8.2-16	1
6858478	Flange, pivot, 90 degree		
6858494	Full cassette index rotation sensor and harness, 13 in.	8.2-15	8
6858496	Tube available sensor and harness, 7 in.	8.2-15	6
6858498	Unload (left) elevator down sensor and harness	8.2-15	9
6858499	Tube-ram sensor and harness	8.2-14	1
6858501	Interlock door switch	8.2-13	21
6858502	Harness, STOP switch, to door		
6858504	Motor, rocker bed		

Table 8.1-3 Autoloader Module *(Continued)*

Part Number	Description	Figure	Item
6858505	Motor, cassette, lift	8.2-13	12
6858506	Index motor, cassette	8.2-13	18
6858507	Sensor and harness, 15 in. (tube forward, needle forward, and needle home sensors on Configuration A, tube forward sensor on Configuration B)	8.2-13 8.2-16	10 9
6858609	Load (right) elevator down sensor and harness	8.2-15	5
6858739	Sensor and harness, cassette 0 and 3	8.2-15	2
6858741	Sensor and harness, cassette 1 and 2	8.2-15	4
6859238	Body front support		
6859268	Guide, needle slide	8.2-16	3
7000201	Bracket, needle cartridge driver	8.2-16	5
7000639	Rocker bed assembly	8.2-15	
7000640	Autoloader module	8.2-13	
7000645	Needle cartridge	8.2-16	2
7000651	Bed lock assembly	8.2-13	11
9908617	E-clip, 90 degree, pivot flange		

Table 8.1-4 Bar-Code System

Part Number	Description	Figure	Item
7000041	Card, Bar-Code Reader Decoder		
7000042	Laser bar-code reader	8.2-11	4

Table 8.1-5 BSV Module

Part Number	Description	Figure	Item
1020163	Retainer, tube (lower ball slide)	8.2-9	12
1020521	Stop, ball slide	8.2-9	9
1020525	Spacer, rinse block support	8.2-9	17
1020527	Rinse block arm, secondary	8.2-9	18
1020529	Retainer, tube (outer ball-slide stop)	8.2-9	10
1020539	Retainer, tube (inner ball-slide stop)	8.2-9	8
1024398	Bushing, shaft (use with BSV actuator PN 6232921)	8.2-7	13
2515004	Spring, fxt, 0.310 d (ball-slide return)	8.2-9	24
2523062	O-ring, 0.187 i.d. x 0.050 w	8.2-7	7
2527868	Knob (use with BSV actuator PN 6232994)	8.2-7	11
2527869	Bushing, shaft (use with BSV actuator PN 6232994)	8.2-7	10
2527870	Bracket, left section (pad) segmenting (use with BSV actuator PN 6232994)	8.2-7	12
2527871	Bushings, centering (use with BSV actuator PN 6232994)	8.2-7	9
2804005	Screw, pan head, #4-40 x 0.25 (for lower tube retainer, rinse block arm)	8.2-9	15
2804011	Screw, machine, #4-40 x 0.25, flat82-HD (for rinse block arm)	8.2-9	16
2804074	Screw, machine, #4-40 x or 0.31, flat82-HD (for ball-slide stop)	8.2-9	11
2804083	Screw, hex, #4-40 x 0.25 (for ball slide)	8.2-9	7
2806090	Screw, pan head, #6-32 x 0.50 (for CL3)	8.2-9	3
2822030	Nut, hex, #6-32 unc x 0.114 thick (for CL3 bracket)	8.2-9	6
2823550	Bearing, ball slide	8.2-9	25
2826002	Washer, split lock #4 (for lower tube retainer)	8.2-9	14
2826035	Washer, split lock, #6, 0.14 i.d. x 0.25 o.d. x 0.031 thick (for CL3 bracket)	8.2-9	5
2827087	Washer, flat, vinyl (for rinse block)	8.2-7 8.2-9	16 20
2827133	Washer, flat, #4 (for lower tube retainer)	8.2-9	13
2827134	Washer, flat, #6, 0.56 i.d. x 0.375 o.d. x 0.046 thick (for CL3 bracket)	8.2-9	4
2851915	Screw, shoulder, rinse block, securing	8.2-7 8.2-9	17 21
2851918	Setscrew, 6-32, rinse block, adjustment	8.2-9	2
6027284	Clamp, wire tie		
6232277	Fitting, 0.093 i.d.	8.2-7	7
6232357	Cylinder, air pot, backwash arm (CL3)	8.2-9	22
6232921	Actuator, valve, double acting, dual concentric shafts, and BSV cylinder knob and bracket (configuration A actuator)	8.2-7	8
6232994	Actuator, valve, double acting, dual concentric shafts, and BSV cylinder knob and bracket (configuration B actuator)	8.2-7	8

Table 8.1-5 BSV Module *(Continued)*

Part Number	Description	Figure	Item
6707096	BSV, self cleaning, 3 sections (pads)	8.2-7	18
6806708	Sample (start) bar, Secondary mode	8.2-7	14
6857096	Pinch valve, single	8.2-7	3
6857904	Harness, BSV module, P51, J60, J75	8.2-8	1
6857953	Bracket, cylinder mounting (CL3)	8.2-9	1
6858031	Ball slide extension	8.2-9	23
6859138	Foam trap, 3-port (FMT4)	8.2-7	23
6915200	BSV module	8.2-7	
7000034	Pump, calibrated, air, 0.064 mL	8.2-7	5
7000035	Tank, sheath	8.2-7	4
7000037	Peltier module	8.2-8	2
7000074	Blood detectors, matched set	8.2-7	19
7000078	Pump, Primary-mode aspiration, 0.185 mL	8.2-7	1
7000079	Switch, rinse block, position detect		
7000082	Rinse block	8.2-7 8.2-9	15 19
7000104	Fan and toroid, Peltier cell	8.2-8	4
7000138	Pump, Secondary-mode aspiration, 0.125 mL	8.2-7	2
7000146	Ambient Temperature Sensor 2 card		

Table 8.1-6 CBC Module

Part Number	Description	Figure	Item
2512088	Seal, O-ring (top of aperture module to fittings)		
2512104	O-ring, aperture, large		
2512120	O-ring, aperture, small		
2830012	Grommet, small		
6232342	Solenoid, Clippard, mixing bubble	8.2-3	6
6232443	Quick disconnect, male	8.2-3	5
6232579	Valve, Angar™	8.2-2	11
6232982	Manifold, 6-port solenoid with solenoids	8.2-3	7
6702275	Aperture, WBC		
6702720	Aperture, RBC		
6706772	Sensor and housing, overflow, bath, fused	8.2-3	11
6806719	Harness, CBC module, P54	8.2-3	10
6853869	Pumps, lytic reagent, matched set, 1.04 mL total	8.2-2	9
6854732	Chamber, isolator (VC1)	8.2-2	4
6855858	Shield, sweep-flow line		
6856916	Manifold, bath bubble assembly (mixing bubbles)	8.2-3	8
6857096	Pinch valve, single	8.2-2	1
6859138	Foam trap, 3-port (FMT3, VC2, VC10, VC11)	8.2-2 8.2-3	2 4
7000051	Hgb Preamp	8.2-2	5
7000109	Chamber, overflow (VC8)	8.2-2	8
7000113	Canister, sweepflow	8.2-3	3
7000114	RBC/WBC bath and Aperture module with cable	8.2-2	6
7000429	Hgb lamp with bracket	8.2-2	7
7000633	HmX CBC module 2, FRU	8.2-2	

Table 8.1-7 Circuit Cards

Part Number	Description	Figure	Item
6705330	Rocker Bed Interface card		
6705746	RCP Junction II card	8.2-11	1
6705768	Fluid Detector/Ram Pressure card	8.2-19	1
6705938	Retic Interface card, and harness (P109)	8.2-23	12
6706413	Waste Level Sense card		
6706469	Autoloader Interface card (CE)	8.2-14	3
6706944	Ready/Stop LEDs card for instruments with an Autoloader module (mounted on rear of upper front door.)		
6706945	Ready/Stop LEDs card for instruments with a Rotary Cap-Pierce module (mounted on rear of upper front door)		
6858109	Card cage, with backplanes	8.2-22	7
7000010	Backplane Solenoid Junction card		
7000020	Pneumatic Monitor card	8.2-19	2
7000023	I/O card	8.2-22	3
7000024	DILUTER INTERFACE card	8.2-22	2
7000025	R/W Preamp card	8.2-22	6
7000026	376 CPU card	8.2-22	1
7000027	R/W/P PROC card	8.2-22	5
7000028	VCS PROCESSOR card	8.2-22	4
7000036	RAM Timer card, 376		
7000041	Bar-Code Reader Decoder card		
7000087	Peltier Controller card	8.2-8	3
7000146	Ambient Temperature card		
7000172	Sample Handler II card		

Table 8.1-8 Covers/Doors

Part Number	Description	Figure	Item
1024700	Plate, magnetic catch		
1024764	Bracket, magnetic mount		
2527856	Plunger, ball spring		
2851480	Screw, shoulder (for molded side panel)		
6805633	Cover, card cage, access (CE)		
6806681	Panel, bottom front		
6806712	Door, rear Analyzer module (right Analyzer module door, from rear)		
6806713	Panel, rear Analyzer module (left Analyzer module door, from rear)		
6806715	Door, upper rear Diluter		
6806716	Door, lower rear Diluter		
6806730	Latch, covers, support		
6806738	Support, catch		
6806739	Panel, front, decorative		
6806749	Slide rack, ball bearing, lower front door		
7000637	Hinge accessory kit for upper front door		
7000641	Door, upper front, on instruments with an Autoloader module		
7000642	Door, lower front, on instruments with an Autoloader module		
7000643	Door, lower front, on instruments with a Rotary Cap-pierce module		
7000644	Side panel, molded, left or right		
7000652	Door, upper front, on instruments with a Rotary Cap-Pierce module		

Table 8.1-9 Fuses

Part Number	Description	Figure	Item
5102011	Fuse, 0.3 A (F9 - 220/240 Vac)		
5102012	Fuse, 1.0 A (F5, F6 - 220/240 Vac)		
5102014	Fuse, 6.25 A (F1, F2 - 100/120 Vac)		
5102016	Fuse, 0.5 A (F3 - 100/120 Vac)		
5102018	Fuse, 4.0 A (F4 - 100/120 Vac)		
5102021	Fuse, 2.0 A (F4 - 220/240 Vac, F5/F6 - 100/120 Vac)		
5102026	Fuse, 0.25 A (F3 - 220/240 Vac, F8 - 100/120 Vac)		
5102029	Fuse, 1.5 A (F10 - 220/240 Vac) (Pneumatic Power Supply)		
5102043	Fuse, 0.0625 (1/16) A (F7 - 220/240 Vac)		
5102058	Fuse, 0.125 A (F7 - 100/120 Vac, F8 - 240 Vac)		
5102084	Fuse, 0.4 A (F9 - 100/120 Vac)		
5120184	Fuse, 2.5 A (F10 - 100/120 Vac) (Pneumatic Power Supply)		
9908780	Fuse, 3.2 A (F1, F2 - 220/240 Vac)		

Table 8.1-10 Interconnect Cables

Part Number	Description	Figure	Item
6027225	Cable, Electronic Power Supply to peripherals		
6027903	Cable, power, EPS to peripherals (CE)		
6027923	Cable, RF Detector Preamp card to backplane (P73)	8.2-23	10
6028130	Cable, solenoid with connector, two conductor		
6028235	Cable, bar-code scanner to Bar-Code Reader Decoder card		
6028236	Cable, sample handler to auto-piercer		
6028238	Cable, ribbon, sample handler to bar-code reader		
6028274	Cable, LS Preamp module to backplane (P78 to P49)	8.2-23	11
6028275	Cable, communication, to bar-code decoder		
6028435	Cable, reagent solenoid		
6028463	Cable, external waste level sensor		
6028480	Cable, LS offset monitor (P113 to P7 [A13 and B38])	8.2-23	13
6028504	Cable, parallel printer, 10 ft (CE)		
6028714	Cable to HmX analyzer J1, Digi Breakout Box P1		
6028717	Cable, Digi Breakout Box		
6029035	Cable, bar-code reconfigure, without bracket		
6705938	Harness, Retic Interface, and card (P109)	8.2-23	12
6707048	Cable, bar-code reconfigure, with bracket		
6806371	Harness, interconnect, J50, J54, J51, J53, J52		
6806372	Harness, communication		
6806700	Harness, main wiring		
6806706	Harness, STOP switch to door.		
6806719	Harness, CBC module, P54	8.2-3	10
6806724	Harness, Main Diluter module, P50 to J81	8.2-19	23
6806727	Harness, Pump module, P53	8.2-10	9
6806729	Harness, RCP interlock switch		
6857192	Cable, flow cell to RF box		
6857900	Harness, Mixing Chamber module, P52 and J71	8.2-5	3
6857904	Harness, BSV module, P51, J60, J75	8.2-8	1

Table 8.1-11 Main Diluter Module

Part Number	Description	Figure	Item
6232081	Tank, air (high vacuum/60-psi pressure)		
6232443	Quick disconnect, male		
6232444	Quick disconnect, female		
6232983	Manifold, valve actuator, 20-station, with solenoids	8.2-19	21
6232984	Manifold, valve actuator, 4-station, with solenoids	8.2-19	4
6706638	Main Diluter module	8.2-19	
6806724	Harness, Main Diluter module P50 to J81	8.2-19	23
6806053	Pump, backwash, 3 mL (PM8)	8.2-19	10
6854671	Manifold, 30 psi (MF14)	8.2-19	11
6854732	Chamber, isolator (VC1, VC5)	8.2-19	22
6859138	Foam trap, 3-port (FMT2)	8.2-19	3
6905043	Dispenser, RBC, 10 mL	8.2-19	24
6912099	Dispenser, WBC, 6 mL	8.2-19	18
7000055	Choke, sheath, #2, reg (CK30)	8.2-19	16
7000064	Pump, dispense, 5 mL (PM10, cleaning agent) (PN 6806058)	8.2-19	17
7000067	Water trap, compressor (FL2)	8.2-19	13
7000068	Water trap, vacuum (FL1)	8.2-19	12
7000069	Regulator, 30 psi (RG2)	8.2-19	15
7000070	Solenoid, condensate drain (LV43)	8.2-19	14
7000071	Regulator, sample/sheath pressure (RG3, RG4)	8.2-19	8
7000145	Regulator, vacuum, solid state (RG1) (6232628)	8.2-19	19
7000380	Chamber, isolator (VC6, VC7)	8.2-19	7
7000606	Optical reagent sensor and housing (diluent and cleaning agent)	8.2-19	6
7000607	Optical reagent sensor and housing (lytic reagent and PAK)	8.2-19	5
7000650	Bracket, dual tank, with air tanks		

Table 8.1-12 Miscellaneous Hardware

Part Number	Description	Figure	Item
1004595	Fitting, hose, polyurethane, 0.062 i.d.(used in Aperture module)		
1004645	Fitting, plug, stopper		
1005693	Fitting, hose, stainless steel, 0.062 diameter		
1005699	Fitting, feed-through, 0.062 i.d., standard	8.2-5	1
1016486	Isolator, feed-through fitting	8.2-4	9
1016929	Fitting, feed-through, small i.d.		
1017501	Mount, pinch valve	8.2-2 8.2-5 8.2-7	3 6 21
1018245	Fitting, Y, large. 0.085 i.d.		
1024698	Bracket, switch, Standby/Reset, lower left		
1808055	Ferrite EMI suppressor, 0.390 in. diameter		
1808056	Ferrite EMI suppressor, 0.500 in. diameter		
1808057	Ferrite EMI suppressor, 0.250 in. diameter		
2014361	Connector, 3-conductor (J106 for TTM)	8.2-23	7
2104189	Contact, pin, 24-20	8.2-24	1
2104190	Contact, socket	8.2-24	2
2104208	Clamp, connector, circular (J50)	8.2-23	1
2104258	Clamp, connector, circular (J26, J80, J82)	8.2-23	15, 17
2104318	Contact, socket, 24-20 AWG, square post (P66 for LS Preamp module, P79, P104 for RF Detector Preamp card)	8.2-23 8.2-24	4, 8, 9 5
2104334	Clamp, connector, circular (J51, J52, J53, J54)	8.2-23	14
2104339	Connector, circular, 8-pin (J80, J82)	8.2-23	17
2104348	Pin, connector, universal Mat-N-LK, 24-18 AWG, brass	8.2-24	3
2104349	Socket T, connector, universal Mat-N-LK, 24-18 AWG, brass	8.2-24	4
2104351	Connector, nine conductor, universal Mat-N-LK, female (J69 for TTM)	8.2-23	6
2104357	Connector, two conductor, universal Mat-N-LK (J32 for instruments with optical reagent sensors, and J77)	8.2-23	5
2104360	Connector, 3-position, male (P5 for Peltier module)	8.2-23	16
2104418	Holder, socket, crimp terminal, 24-18 AWG, Molex	8.2-24	7
2113010	#8 ring, 22-16 AWG, insulated	8.2-24	9
2113018	#6 ring, 22-16 AWG, insulated	8.2-24	9
2113022	#6 ring, 16-14 AWG, insulated	8.2-24	9
2113045	Terminal receptacle, 22-18 AWG	8.2-24	10
2113052	Terminal, solderless, #5 spring spade, 22-16 AWG	8.2-24	6
2113053	Terminal receptacle, 22-18 AWG	8.2-24	10

Table 8.1-12 Miscellaneous Hardware *(Continued)*

Part Number	Description	Figure	Item
2121050	Terminal receptacle, 22-18 AWG	8.2-24	10
2121280	Connector (P91)	8.2-23	3
2121328	Connector, 3-position (P66 for LS Preamp module)	8.2-24	9
2121415	Connector, 4-position (P104 for RF Detector Preamp card)	8.2-23	8
2121420	Terminal, solderless receptacle, 90 degree, 22-18 AWG	8.2-24	8
2121421	Contact, socket, 26-22 AWG, square post	8.2-24	5
2121426	Nine-position assembly module (J69 for TTM)	8.2-23	6
2121436	Adapter (J69 for TTM)	8.2-23	6
2121442	Connector (P1, P4 for Peltier module)	8.2-23	2
2121454	Connector (P79)	8.2-23	4
2121684	Connector, circular, 28-pin (J51, J52, J53, J54)	8.2-23	14
2121685	Connector, circular, 8-pin (J26)	8.2-23	15
2121687	Connector, circular, 57-pin (J50)	8.2-23	1
2512007	O-ring, 0.687 i.d.		
2512064	O-ring, 0.25 i.d. x 0.375 o.d.		
2523608	Gasket, SMC solenoid		
2523616	Latch, magnetic		
2603009	Grill, fan, 4 in.		
2603010	Filter, fan		
2851121	Strike plate, steel, self-adhesive		
2851784	Screw, SMC solenoid		
2852004	Clamp, plastic, 60 psi line		
5116004	Switch, magnetic reed (door interlock)		
5120211	Switch, rocker (Standby/Reset)		
6011001	Wire tie, 4 in.		
6011018	Wire tie, 8 in.		
6211015	Actuator, pilot, small	8.2-3 8.2-5 8.2-7	1 5 20
6213006	Choke, pneumatic, red (0.008 orifice)		
6213008	Choke, pneumatic, yellow (0.004 orifice)		
6213009	Choke, pneumatic, brown (0.006 orifice)		
6213010	Choke, pneumatic, blue (0.012 orifice)		
6213011	Choke, pneumatic, black (0.010 orifice)		
6213016	Choke, variable, 1/16 i.d. (for pressure line of CBC lytic reagent pumps)		
6214106	Check valve, large		

Table 8.1-12 Miscellaneous Hardware *(Continued)*

Part Number	Description	Figure	Item
6214107	Check valve, medium		
6214108	Check valve, small		
6216354	Fitting, T, large, 0.145 i.d.		
6216357	Fitting, nylon, insert locking		
6232036	Fitting, 0.036, 10-32 standard	8.2-5	4
6232051	Fitting, T, small, 0.094 i.d.		
6232075	Solenoid valve, 3-way, 50 psi, 24 Vdc	8.2-7	6
6232259	Fitting, Y, small. 0.093 i.d.		
6232352	Fitting, reducer, 0.062 i.d. x 0.093 i.d.		
6232376	Solenoid valve, SMC, 5-way	8.2-11 8.2-14	14 2
6232412	Solenoid valve, SMC, 3-way	8.2-19 8.2-6	4 2
6232447	Actuator, pilot, large	8.2-3	12
6232564	Fitting, union, 0.125 to 0.062 i. d.		
6232605	Check valve, extra large (rear of Main Diluter module, diluent/cleaning agent lines)		
6232985	Solenoid valve, Clippard, 3-way (used on 4-, 6-, and 20-station solenoid manifolds)	8.2-3 8.2-10 8.2-19	9 1 20
6855763	Pinch valve, double acting, I-beam, removable, standard	8.2-2 8.2-5 8.2-7	3 9 22
6856319	Pinch valve, triple	8.2-2 8.2-3 8.2-19	12 29
6856502	Plate assembly, quick disconnect		
6857096	Pinch valve, single, miniature, round	8.2-2 8.2-4 8.2-7	1 5 3
6859138	Foam trap, 3-port (FMT1, FMT2, FMT3, FMT4, VC2, VC10, VC11)	8.2-2 8.2-3 8.2-7 8.2-19	2 4 23 3

Table 8.1-13 Mixing Module

Part Number	Description	Figure	Item
1019262	Shaft, eccentric		
2523221	Belt, mixing motor	8.2-5	2
2523521	Timing pulley, 60 grooves		
2523522	Timing pulley, 10 grooves		
2827122	Washer, Teflon		
6232434	Ring, Luer lock, white (use with PN 6232435 and PN 6232436)	8.2-4	3
6232435	Fitting, Luer, 0.094 i.d. male		
6232436	Fitting, Luer, 0.094 i.d. female	8.2-4	2
6232443	Quick disconnect, male		
6805583	Drive assembly, mixing motor		
6857019	Holder, mixing chamber	8.2-4 8.2-5	8 7
6857900	Harness, Mixing Chamber module, P52 and J71	8.2-5	3
6858748	Mixing chamber assembly	8.2-4	6
6915226	Mixing Chamber module	8.2-4	
7000032	Pump, StabiLyse reagent, 0.133 mL	8.2-4	7
7000474	Mixing chamber drive assembly	8.2-5	8
7000487	Motor, mix chamber, 24 Vdc	8.2-6	1

Table 8.1-14 Options/Upgrade Kits

Part Number	Description	Figure	Item
	None currently available		

Table 8.1-15 Pickup Tubes and Sensors

Part Number	Description	Figure	Item
6706295	Pickup tube, universal, for diluent and cleaning agent,10 L and 20 L		
6706296	Pickup tube, universal, for PAK LYSE, 5 L lytic reagent, 5 L cleaning agent		
6706297	Pickup tube, universal, StabiLyse, 1 L and 500 mL lytic reagent		
7000008	Waste, pickup tube with level sense		

Table 8.1-16 Power Supplies

Part Number	Description	Figure	Item
2104348	Pin, male (used on power supply connectors)		
2104349	Pin, female (used on power supply connectors)		
2104353	Connector, 12-pin, female (power supply J116/J108)		
2104361	Connector, 3-pin, female (power supply J113/J114)		
2523590	Mount, compressor shock, 6 lb	8.2-21	4
2602022	Fan, 230 Vac (use with Pneumatic Power Supply module, 220/240 Vac)	8.2-21	2
2602023	Fan, 115 Vac (use with Pneumatic Power Supply module, 100/110 Vac)	8.2-21	2
2727758	Filter, input line		
4510012	Electronic Power Supply module relay, K1 and K2		
5120173	Switch, rocker (used with Electronic Power Supply)		
6208005	Regulator, 60 psi	8.2-21	3
6232657	Pump, vacuum/pressure, 100/115 Vac	8.2-21	1
6232658	Pump, vacuum/pressure, 220/230 Vac	8.2-21	1
6707021	Laser power supply, 100 Vac		
6707022	Laser Power Supply, 120 Vac		
6707023	Laser Power Supply, 220/240 Vac		
7000000	Power supply, +24 Vdc (PS4)	8.2-20	6
7000001	Power supply, +5 Vdc, 5 A (PS7, 5.6 V supply)	8.2-20	5
7000002	Power supply, +12 Vdc, 6.3 A (PS6)	8.2-20	7
7000003	Power supply, +5 Vdc, 12 A ±15 Vdc (PS3)	8.2-20	4
7000043	Aperture Voltage/Power Fail Detect card, 100 Vac	8.2-20	2
7000044	Aperture Voltage/Power Fail Detect card, 120 Vac	8.2-20	2
7000045	Aperture Voltage/Power Fail Detect card, 220 Vac	8.2-20	2
7000046	Power supply, RF	8.2-20	3
7000066	Fan, Electronic Power Supply, Toroid, 24 Vdc	8.2-20	1
7000627	Electronic Power Supply, 100 Vac (CE)		
7000628	Electronic Power supply module, 110/120 Vac (CE)		
7000629	Electronic Power Supply module, 220/240 Vac (CE)		
7000630	Pneumatic Power Supply module, 100 Vac		
7000631	Pneumatic Power Supply module, 100/120 Vac		
7000632	Pneumatic Power Supply module, 220/240 Vac		
7231079	Compressor rebuild kit		

Table 8.1-17 Pump Module

Part Number	Description	Figure	Item
2830012	Grommet, small		
2830017	Grommet, large		
6232434	Ring, Luer lock, white (use with PN 6232435 and PN 6232436)		6
6232435	Fitting, Luer, 0.094 i.d. male		
6232436	Fitting, Luer, 0.094 i.d. female	8.2-10	6
6232443	Quick disconnect, male	8.2-10	3
6232982	Manifold, 6-station solenoid with solenoids	8.2-10	2
6806727	Harness, Pump module, P53	8.2-10	9
6854848	Chamber, isolator (VC4 with screen)	8.2-10	7
6859138	Foam trap, 3-port (FMT1)	8.2-10	4
7000063	Pumps, matched set, Erythrolyse II reagent	8.2-10	5
7000381	Chamber, isolator (VC3 with screen)	8.2-10	8
7000634	HmX Pump module, FRU	8.2-10	

Table 8.1-18 Rotary Cap-Pierce Module

Part Number	Description	Figure	Item
1014581	Spring, holder	8.2-12	12
1014599	Hinge block (saddle guide)	8.2-12	16
1014725	Spacer, tube clamp to air cylinder	8.2-12	18
1020044	Bracket, code-wheel sensor	8.2-12	7
1020054	Code wheel	8.2-12	9
1020230	Saddle guide (hinge block, PN 1014599, pin PN 2831012)	8.2-12	14
1020571	Shaft, stub, threaded	8.2-12	23
1020576	Guide, lower, tube clamp	8.2-12	19
1020577	Guide, upper, tube clamp	8.2-12	21
1020594	Needle slide	8.2-11	12
1020664	Washer, special, vibration insulator for vial guide		
1020694	Spring, tube available sensor	8.2-12	5
1020745	Vial guide, molded plastic, covers half of carousel shaft	8.2-12	26
1020950	Cradle guide	8.2-12	2
1022197	Bracket, tube clamp, without bumper		
1024688	Bracket, dual opto sensor, needle position	8.2-11	6
1024689	Sensor guide (mounts on PN 1024688)	8.2-11	6
1024703	Tube ejector (spacer two each, PN 2843056)	8.2-12	10
2515017	Spring, compression, cap-piercer, tube retainer	8.2-12	13
2523199	Coupling, flex shaft	8.2-12	24
2523615	Shock mount for carousel motor		
2826035	Washer, split- lock, bar-code scanner bezel and window		
2830029	Grommet, black trim	8.2-11	2
2831012	Pin, dowel (saddle guide)	8.2-12	15
2838063	Holder, panel, grommet for LED	8.2-12	6
2851768	Pin, pivot, tube available sensor	8.2-12	3
3213199	Bumper, rubber, tube clamp	8.2-12	22
6232376	Solenoid, 5-way	8.2-11	12
6232434	Ring, Luer lock, white (use with PN 6232435 and PN 6232436)	8.2-11	10
6232435	Fitting, Luer, 0.094 i.d. male		
6232436	Fitting, Luer, 0.094 i.d. female	8.2-11	10
6232460	Cylinder, air, tube clamp (CL4)		
6232461	Cylinder, air, needle pierce (CL5)	8.2-11	7
6806670	Bracket, HmX carousel, black	8.2-12	8
6806682	Support block, removable catch tray	8.2-11	13

Table 8.1-18 Rotary Cap-Pierce Module *(Continued)*

Part Number	Description	Figure	Item
6806683	Tray, tube catch, removable (mounts on PN 6806682)	8.2-11	13
6806721	Bracket, channel, carousel, with LEDs and harness	8.2-12	1
6232999	Cylinder, air, with magnet	8.2-11	8
6805584	Sensor, Hall effect (for Rotary Cap-Pierce module only)	8.2-11	9
6806729	Harness, cap-pierce solenoid		
6857787	Lever, tube available sensor	8.2-12	4
6857949	Harness, carousel/needle sensors and LEDs	8.2-11	5
6858029	Nut plate (fits on motor vial guide side of carousel)	8.2-12	25
6858040	Carrier, tube holder (setscrews PN 2807080)	8.2-12	17
6858141	Bracket, cradle guide		
6859030	Bracket, tube clamp with bumper	21	20
6859238	Retainer, needle cartridge, front	8.2-12	11
7000042	Laser bar-code reader	8.2-11	4
7000057	Motor, carousel (order four each 2523615 elastic shock mounts)	8.2-11	15
7000080	Transistor, photoelectric, Q1 and Q2, WM11 and WM13		
7000081	Diode, light emitting, DS1 and DS2, WM10 and WM12		
7000635	Needle cartridge, HmX RCP, FRU	8.2-11	11
7000636	Rotary Cap-Pierce module	8.2-11	
7000638	Carousel assembly, HmX RCP	8.2-12	

Table 8.1-19 Shielded Reagent Lines

Part Number	Description	Figure	Item
7000091	Input line, cleaning agent, shielded		
7000093	Input line, diluent, shielded		
7000094	Input line, waste, shielded		
7000148	Input line, CBC lytic reagent, Erythrolyse reagent, and StabiLyse reagent, shielded		

Table 8.1-20 Software

Part Number	Description	Figure	Item
6706062	PROM, Sample Handler, U4 7A/B/C		
6706063	PROM, 376 CPU, U46 7A/B/C		
6915391	Software Kit, HmX English version, 1.1		
2016847	Chip, Printer firmware, Okidata ML-590		

Table 8.1-21 Tools and Supplies

Part Number	Description	Figure	Item
1606138	Isopropyl alcohol (10 x 4 mL)		
2016642	Digiboard diagnostics kit		
2527713	Applicator sticks (flow-cell cleaning)		
4276605	HmX System Verification Procedure (SVP) form		
5111192	Magnet, bypass (to bypass lower door switch)		
5401245	Gauge, horizontal/vertical (Z-axis)		
5401269	Light shield, special		
5402071	Tool, plastic trimmer, pot adjustment for C1		
5402208	Tool, pin extractor (red/white)		
5402226	IC extraction tool		
5415206	Tool, pinch valve removal		
5415219	Tool, tamperproof screw removal		
5415364	Tool, plastic, potentiometer adjustment, 0.32 tips		
5415365	Wrench, open end, 1/4 in.		
5415374	Volumetric cylinder (used to check pump volumes)		
5715370	Glasses, laser safety		
6028454	Cable assembly, Autoloader Sensor Test card		
6232457	Pipettor, vertical dispenser, 2.0 mL		
6417073	Troubleshooter PC software diagnostics		
6605419	Latex particles DC/RF (large)		
6705822	Autoloader Sensor Test card		
6857371	Latex particles, 94.3 fL (small)		
6858098	Dummy load, RF Preamp		
6858098	Dummy load, RBC (28 K)		
6858376	Dummy load, WBC (14 K)		
6912920	PAK (Erythrolyse II reagent) pump volume kit, without vial PN 5415374		
6915392	Service Disk 3, 3.5 in.		

Table 8.1-22 Triple Transducer Module

Part Number	Description	Figure	Item
1017940	Shaft, TTM, X-axis (horizontal) adjustment	8.2-18	13
1019356	Plate, TTM, flow-cell mounting (Rev. C)	8.2-18	20
1020249	Shield, magnetic (laser cover)	8.2-17	2
1022733	Bolt plate, horizontal (Rev. A)		
2429637	Label, laser warning		
2515158	Spring, TTM X-, Y-, Z-alignment shafts	8.2-18	9
2523590	Mount, shock, 6 lb		
2806009	Screw, 0.25 long, #6 x 32, pan-head, xrec (flow-cell mount)	8.2-18	19
2807038	Setscrew, 10-32 x 0.25 long, hex (flow-cell lock down)	8.2-18	11
2808059	Screw, Z-axis lock down		
2808110	Screw, 0.50 long, #8 x 32, hsc-head, hex	8.2-18	18
2808131	Screw, 2.25 l, #8 x 32, pan-head, xrec	8.2-18	3
2826048	Washer, flat, #2, 0.094 i.d. x 0.188 o.d. x 0.028 thick	8.2-18	4
2827021	Nut, 0.21 i.d. x 0.51 o.d. x 0.51		
2827135	Washer, flat, #8, 0.187 i.d. x 0.438 o.d. x 0.063 thick	8.2-18	5
2827160	Washer, flat, #8, 0.188 i.d. x 0.375 o.d. x 0.045 thick, X/Y/Z alignment shaft	8.2-18	8
2851561	Washer, large, shock mount		
2851566	Screw, tamperproof	8.2-17	3
2851567	Screw, threaded, 1.57 l, #10 x 56, used on Y- and Z-axes	8.2-18	7
2851568	Nut, hex, #10, used on X-axis	8.2-18	14
2851569	Nut, square, #10, used on Y- and Z-axes	8.2-18	10
2851573	Screw, Allen, TTM mounting		
2851614	Screw, 0.62 long, #8 x 32, TTM lock down	8.2-18	17
2852270	Washer, lock, spring, 0.164 i.d. x 0.343 o.d. x 0.013 thick	8.2-18	16
2852276	Screw, 0.62 long, #8 x 32, hex-head, ehex	8.2-18	15
4802024	LED, red, TTM laser ON		
5120035	Switch, interlock, laser		
5704031	Vacuum tube, RF triode, 12AU7A (new style)	8.2-17	4
6706013	Sensor, LS, 3-element (Rev. B), for retic ready units	8.2-18	2
6706039	Flow cell, coated and tested	8.2-18	1
6856153	Plates, TTM, horizontal and vertical adjustment	8.2-18	11
6858361	Shield, flow cell (cover)	8.2-17	1
6859066	LS Preamp 5 module	8.2-17	7
6859777	RF Detector Preamp #6 assembly	8.2-17	5
7000038	Base and laser mount	8.2-17	6

Table 8.1-22 Triple Transducer Module *(Continued)*

Part Number	Description	Figure	Item
7000551	Lens block assembly	8.2-18	6
7000646	TTM assembly, complete		

Table 8.1-23 Tubing

Part Number	Description	Figure	Item
1018010	Tubing, special, sample line, 14.6 in. long **Routing:** At CBC module, from BT2-7 to SF1		
1018301	StabiLyse line (delivery to mixing chamber)		
3202036	Tubing, poly, 0.082 i.d., clear		
3202038	Tubing, poly, 0.113 i.d.		
3202039	Tubing, poly, 0.145 i.d.		
3202044	Tubing, trim, black		
3202061	Tubing, PVC, red, for critical length tubings		
3202203	Tubing, poly, 0.082 i.d., black/clear		
3202204	Tubing, poly, 0.082 i.d., brown/clear		
3202205	Tubing, poly, 0.082 i.d., red/clear		
3202206	Tubing, poly, 0.082 i.d., orange/clear		
3202207	Tubing, poly, 0.082 i.d., yellow/clear		
3202208	Tubing, poly, 0.082 i.d., green/clear		
3202210	Tubing, poly, 0.082 i.d., violet		
3202211	Tubing, poly, 0.082 i.d., grey/clear		
3202212	Tubing, poly, 0.082 i.d., white/clear		
3202213	Tubing, poly, 0.082 i.d., brown/black		
3202214	Tubing, poly, 0.082 i.d., red/black		
3202215	Tubing, poly, 0.082 i.d., orange/black		
3202216	Tubing, poly, 0.082 i.d., yellow/black		
3202217	Tubing, poly, 0.082 i.d., green/black		
3202221	Tubing, EVA, 0.062 i.d.		
3202243	Tubing, poly, 0.081 i.d., violet/black		
3202244	Tubing, poly, 0.081 i.d., grey/black		
3202277	Tubing, poly, 0.082 i.d., black		
3203026	Tubing, silicone, green striped, pinch		
3213073	Tubing, silicone, 0.023 i.d., red stripe		
3213136	Tubing, pull apart, black stripe		
3213137	Tubing, pull apart, blue stripe		
3213139	Tubing, pull apart, red stripe		
3213163	Tubing, silicone, 0.062 i.d., brown stripe		
3213176	Tubing, silicone, 0.079 i.d., yellow stripe		
3213197	Tubing, pull apart, 0.062 i.d. x 0.031 w		
3213205	Tubing, Tygon®, 0.030		

Table 8.1-23 Tubing *(Continued)*

Part Number	Description	Figure	Item
3213212	Tubing, thermoplastic, 0.062 i.d. x 0.047 w		
6857275	Quench (StabiLyse reagent) line **Routing:** At Mixing module, from MC1-5 through PV53 (normally closed) to FF173-1		
6857802	Secondary mode aspirator assembly tubing, with fitting		
6858077	Tubing, special, 7.0 in., 0.023 i.d. **Routing:** At Pump module, from FMT1-3 to CV79-2 At Main Diluter module - • From MF9-3 to FF205-2 • From FF233-2 to CV41-2 • From FF210-2 to CV26-1		
6859002	Pre-prep/LATRON control line, 6-in. long x 0.030 i.d. **Routing:** At BSV module, from FT31-2 to FF29-2.		
6859003	Pre-prep/LATRON control line, 18-in. long x 0.030 i.d. **Routing:** From BSV module FF37-2 to Mixing module MC1-3		
6859115	Tubing, special, 4.5 in. long x 0.011 i.d., sheath restrictor #1 **Routing:** At Mixing module, from FF176-1 to FF177-1		
6859118	Tubing, line choke, 4.75 in. long x 0.021 i.d. (CBC lytic reagent restrictor) **Routing**: At CBC module, from FU7-2 to FY8-2		
6859267	Tubing, line choke, 7.5 in. long x 0.021 i.d. (CBC lytic reagent restrictor) **Routing**: At CBC module, from FU7-2 to FY8-2		
7000095	Rinse line, 4.5 in. long x 0.030 i.d. **Routing**: At BSV module, from BSV WM6 to Peltier module, PLB1-2		
7000096	Rinse line, 4.0 in. long x 0.030 i.d. **Routing**: From BSV module Peltier module, PLB1-3, to Mixing module FF172-2		
7000097	Sample line, 11.0 in long x 0.023 i.d. **Routing**: From BSV module, BSV WM11, through Mixing module PV51 (normally open) to MC1-4		
7000100	Tubing, special, 6.0 in. long x 0.010 i.d. **Routing:** From Mixing module MC1-7 through PV55 to Flow Cell module FC1-1		
7000101	Tubing, special, 3.5 in.long x 0.010 i.d., sheath restrictor #1 **Routing:** At Mixing module, from FF176-1 to FF177-1		
7000102	Tubing, special, 15.0 in.		

8.2 ILLUSTRATED PARTS

On the illustrations in this section, a number is used to identify the part in the associated parts list, a letter to indicate detailed illustrations are available for the component or assembly.

Figure 8.2-1 Main HmX Hematology Analyzer Components Illustrated

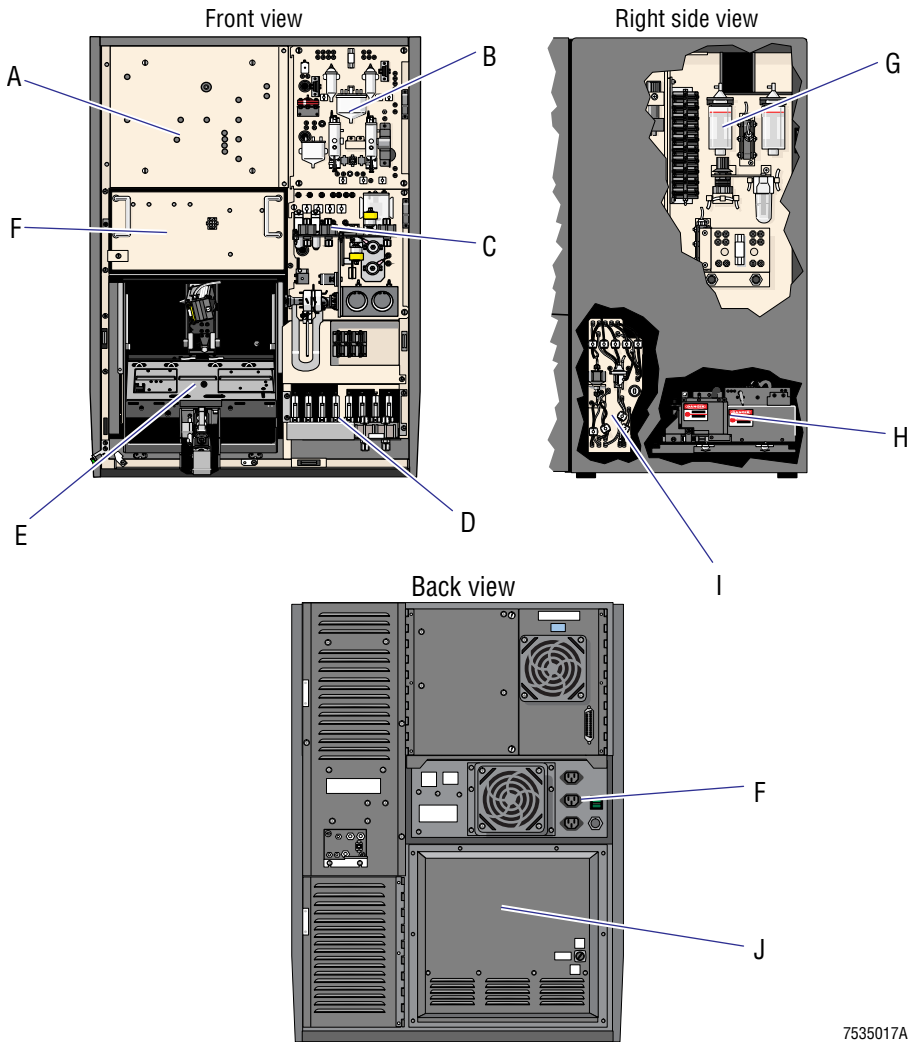

Figure Reference

- **A** Figure 8.2-22
- **B** Front, Figure 8.2-2
  Rear, Figure 8.2-3
- **C** Front, Figure 8.2-7
  Rear, Figure 8.2-8
  Ball and slide assembly, Figure 8.2-9
- **D** Figure 8.2-10
- **E** Front, Figure 8.2-13
  Rear, Figure 8.2-14
  Rocker bed, Figure 8.2-15
  Needle assembly, Figure 8.2-16
- **F** Figure 8.2-20
- **G** Figure 8.2-19
- **H** Figure 8.2-17
- **I** Front, Figure 8.2-4
  Right-side, Figure 8.2-5
  Left-side, Figure 8.2-6
- **J** Figure 8.2-21

Table 8.2-1 Illustrations Not Referenced from Figure 8.2-1

Title	Figure Number
Rotary Cap-Pierce Module (See Table 8.2-11)	8.2-11
Rotary Cap-Pierce Module, Carousel Assembly (See Table 8.2-12)	8.2-12
Wire Harness Components (See Table 8.2-23)	8.2-23
Electrical Connectors	8.2-24

Figure 8.2-2 CBC Module, Front View (See Table 8.2-2)

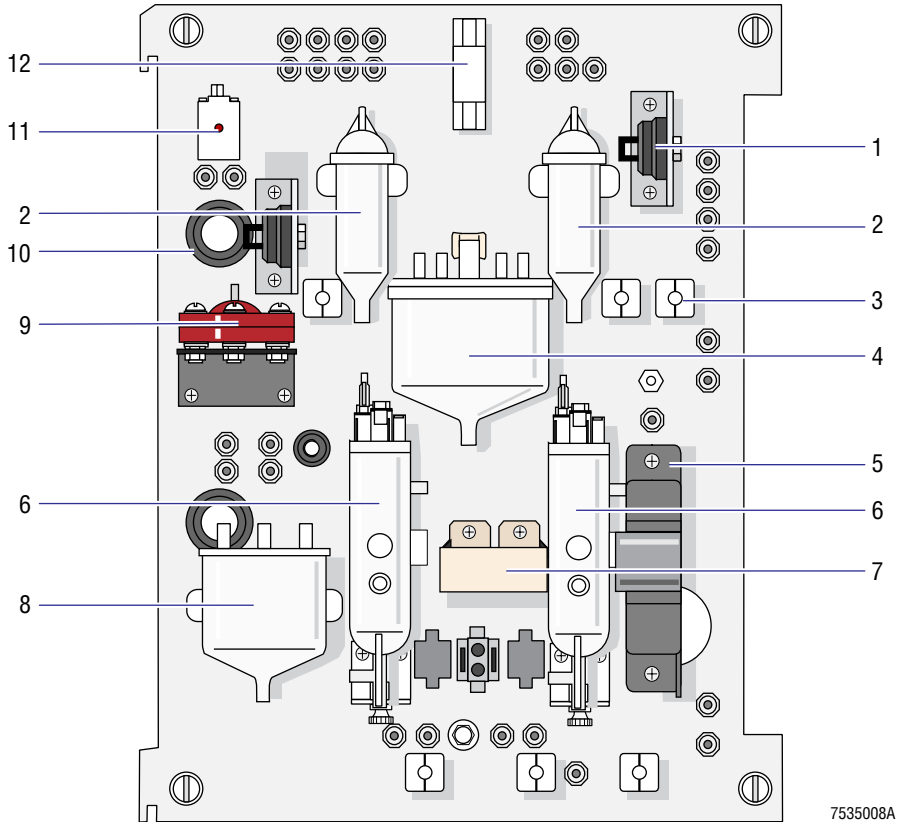

Table 8.2-2 CBC Module, Front View (See Figure 8.2-2)

Item	Part Number	Description
	7000633	HmX CBC module 2, FRU
1	6857096	Pinch valve, single, miniature, round
2	6859138	Foam trap, 3-port (VC10, VC11)
3	6855763 1017501	Pinch valve, double acting, I-beam, removable, standard Mount, pinch valve
4	6854732	Chamber, isolator (VC1, VC5)
5	7000051	Hgb preamp
6	7000114	RBC/WBC bath and Aperture module with cable
7	7000429	Hgb lamp with bracket
8	7000109	Chamber, overflow (VC8)
9	6853869	Pumps, lytic reagent, matched set, 1.04 mL total
10	2830017	Grommet, large
11	6232579	Valve, Angar™
12	6856319	Pinch valve, triple

Figure 8.2-3 CBC Module, Rear View (See Table 8.2-3)

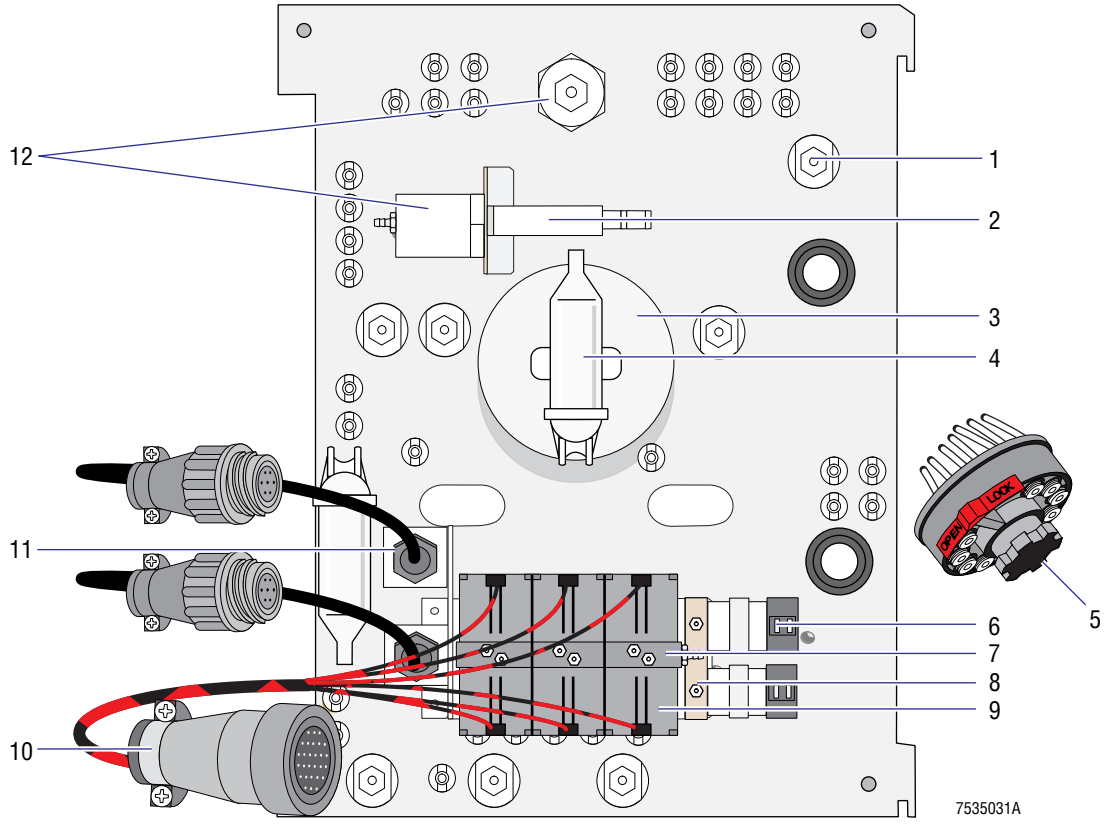

Table 8.2-3 CBC Module, Rear View (See Figure 8.2-3)

Item	Part Number	Description
1	6211015	Actuator, pilot, small
2	6856319	Pinch valve, triple
3	7000113	Canister, sweep flow
4	6859138	Foam trap, 3-port (FMT3, VC2)
5	6232443	Quick disconnect, male
6	6232342	Solenoid, Clippard, mixing bubble
7	6232982	Manifold, 6-port solenoid with solenoids
8	6856916	Manifold, bath bubble assembly (mixing bubbles)
9	6232985	Solenoid, Clippard, 3-way
10	6806719	Harness, CBC module, P54
11	6706772	Sensor and housing, overflow, bath, fused
12	6232447	Actuator, pilot, large

Figure 8.2-4 Mixing Module, Front View (See Table 8.2-4)

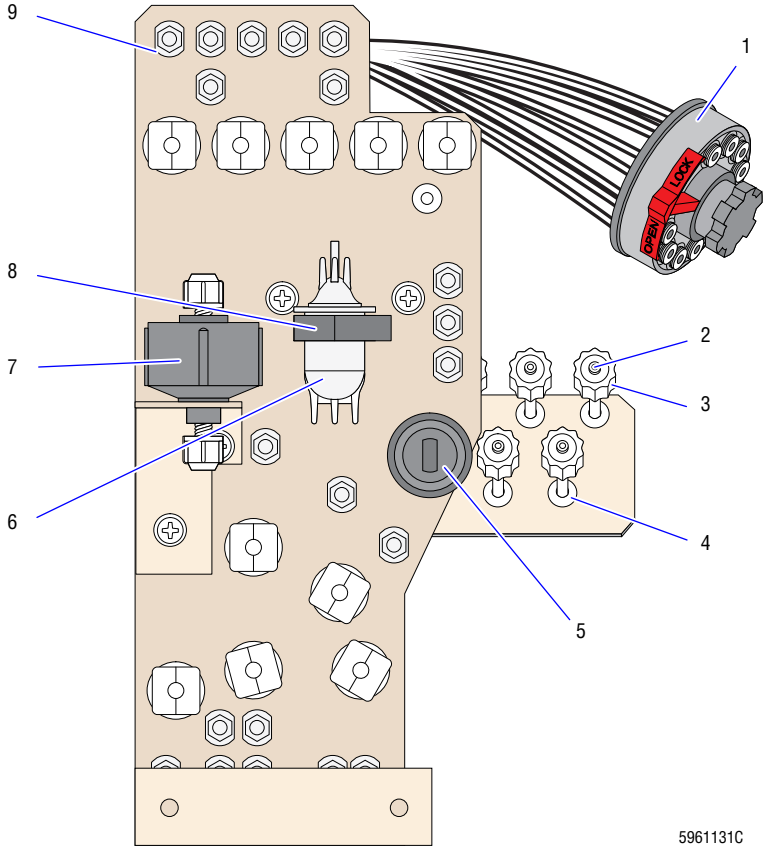

Table 8.2-4 Mixing Module, Front View (See Figure 8.2-4)

Item	Part Number	Description
	6915226	Mixing Chamber module
1	6232443	Quick disconnect, male
2	6232436	Fitting, Luer, 0.094 i.d., female
3	6232434	Ring, Luer lock, white (use with PN 6232435 and PN 6232436)
4	2830012	Grommet, small
5	6857096	Pinch valve, single, miniature, round
6	6858748	Mixing chamber assembly
7	7000032	Pump, StabiLyse, 0.133 mL
8	6857019	Holder, mixing chamber
9	1016486	Isolator, feed-through fitting

Figure 8.2-5 Mixing Module, Right Side View (See Table 8.2-5)

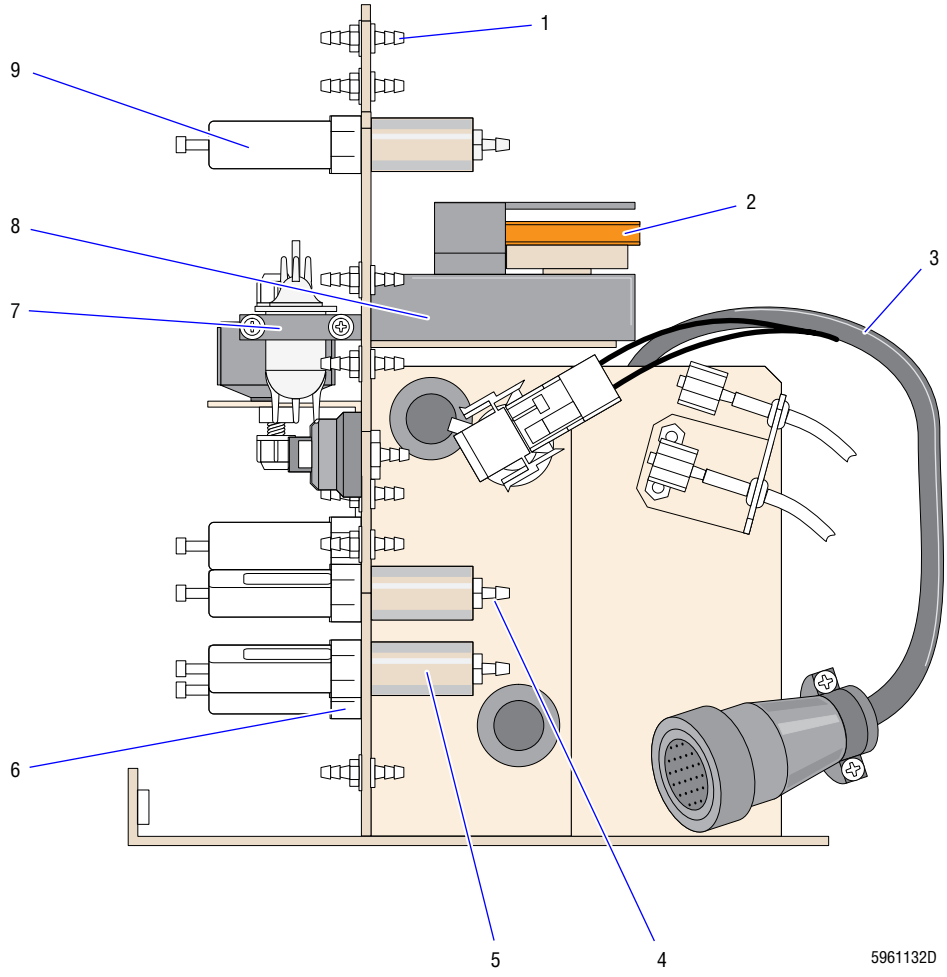

Table 8.2-5 Mixing Module, Right Side View (See Figure 8.2-5)

Item	Part Number	Description
1	1005699	Fitting, feed-through, 0.062 i.d., standard
2	2523221	Belt, mixing motor
3	6857900	Harness, Mixing Chamber module, P52 and J71
4	6232036	Fitting, 0.036, 10-32 standard
5	6211015	Actuator, pilot, small
6	1017501	Mount, pinch valve
7	6857019	Holder, mixing chamber
8	7000474	Drive assembly, mixing chamber
9	6855763	Pinch valve, double acting, I-beam, removable, standard

Figure 8.2-6 Mixing Module, Left Side View (See Table 8.2-6)

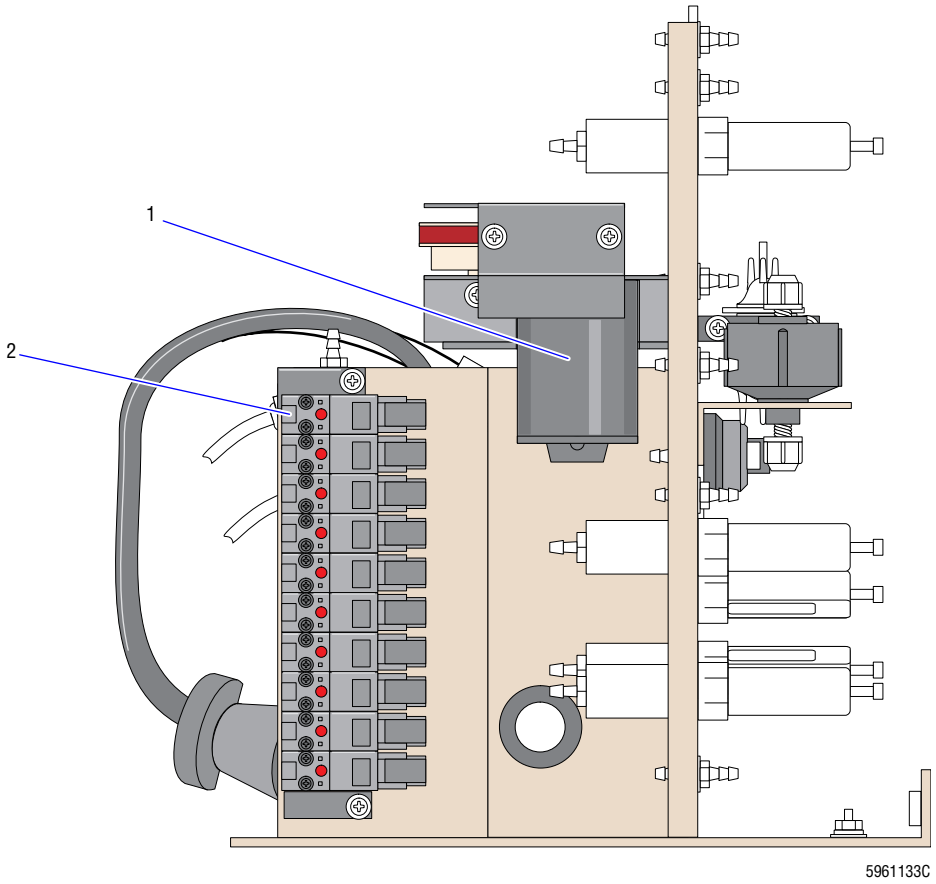

Table 8.2-6 Mixing Module, Left Side View (See Figure 8.2-6)

Item	Part Number	Description
1	7000487	Motor, mixing chamber, 24 Vdc
2	6232412	Solenoid valve, SMC, 3-way

Figure 8.2-7 BSV Module, Front View (See Table 8.2-7)

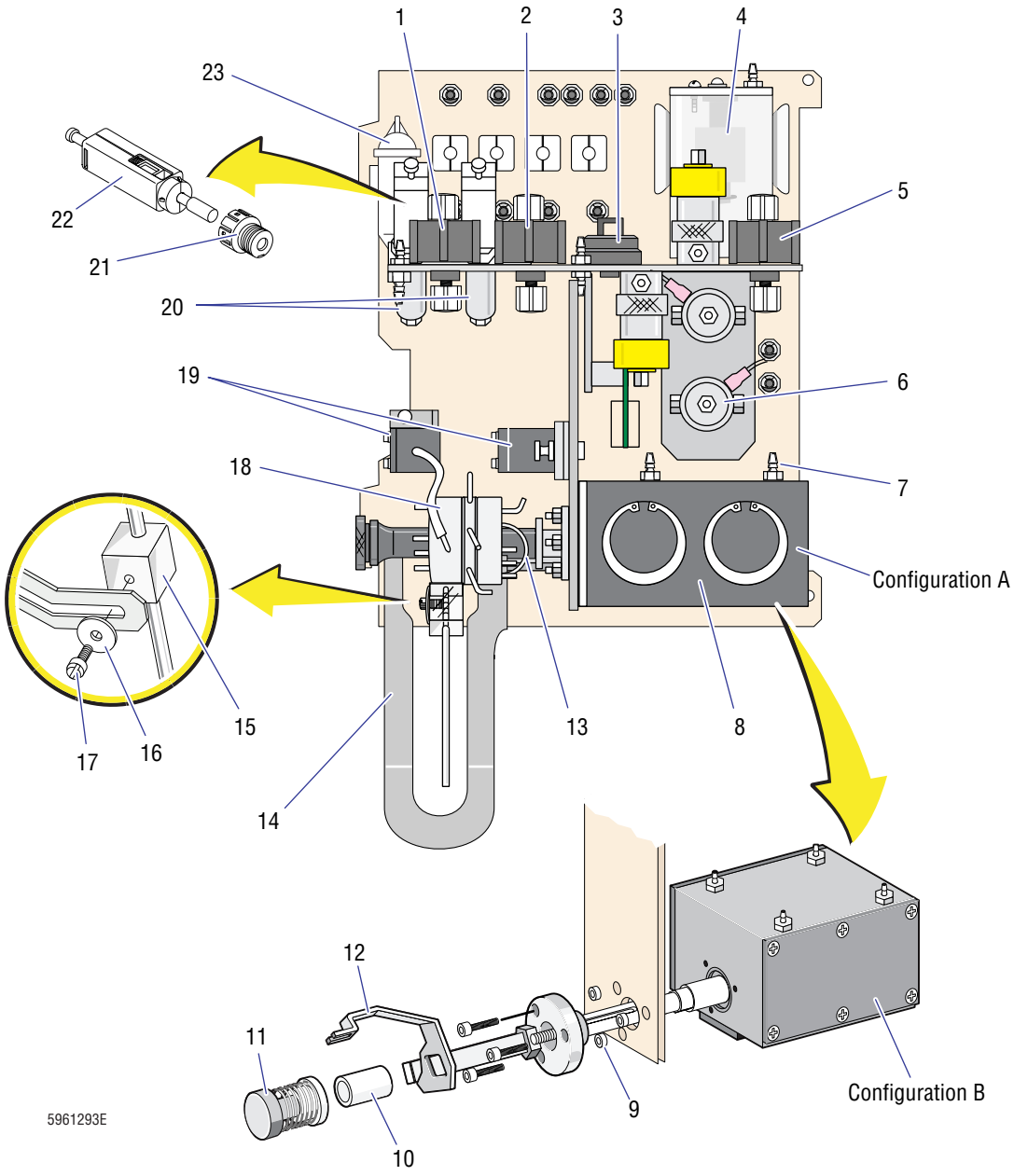

Table 8.2-7 BSV Module, Front View (See Figure 8.2-7)

Item	Part Number	Description
	6915200	BSV module
1	7000078	Pump, Primary-mode aspiration, 0.185 mL
2	7000138	Pump, Secondary-mode aspiration, 0.125 mL
3	6857096	Pinch valve, single, miniature, round
4	7000035	Tank, sheath
5	7000034	Pump, calibrated, air, 0.064 mL
6	6232075	Solenoid, 3-way, 50 psi, 24 Vdc
7	6232277 2523062	Fitting, 0.093 i.d. O-ring, 0.187 i.d. x 0.050 w
8	6232921 6232994	Actuator, valve, double acting, dual concentric shafts, and BSV cylinder knob and bracket (configuration A actuator) Actuator, valve, double acting, dual concentric shafts, and BSV cylinder knob and bracket (configuration B actuator)
9	2527871	Bushings, centering (use with BSV actuator PN 6232994)
10	2527869	Bushing, shaft (use with BSV actuator PN 6232994)
11	2527868	Knob (use with BSV actuator PN 6232994)
12	2527870	Bracket, left section (pad) segmenting (use with BSV actuator PN 6232994)
13	1024398	Bushing (use with BSV actuator PN 6232921)
14	6806708	Sample (start) bar, Secondary mode
15	7000082	Rinse block
16	2827087	Washer, flat, vinyl (for rinse block)
17	2851915	Screw, shoulder, rinse block, securing
18	6707096	BSV, self cleaning, 3 sections (pads)
19	7000074	Blood detectors, matched set
20	6211015	Actuator, pilot, small
21	1017501	Mount, pinch valve
22	6855763	Valve, pinch, double acting, I-beam, removable, standard
23	6859138	Foam trap, 3-port (FMT4)

Figure 8.2-8 BSV Module, Rear View (See Table 8.2-8)

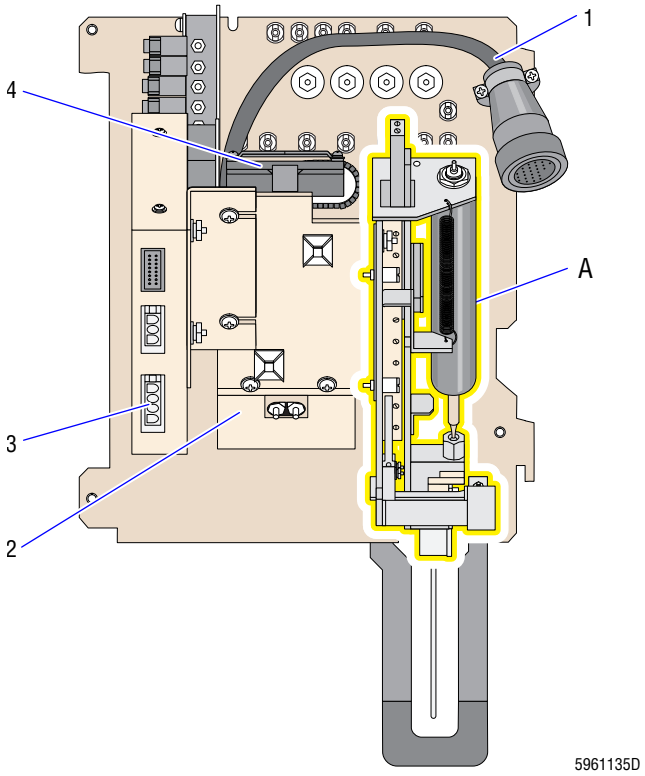

Figure Reference

A Ball and Slide Assembly, Figure 8.2-9

Table 8.2-8 BSV Module, Rear View (See Figure 8.2-8)

Item	Part Number	Description
1	6857904	Harness, BSV module, P51, J60, J75
2	7000037	Peltier module
3	7000087	Peltier Controller card
4	7000104	Fan and toroid, Peltier cell

Figure 8.2-9 BSV Module, Ball and Slide Assembly (See Table 8.2-9)

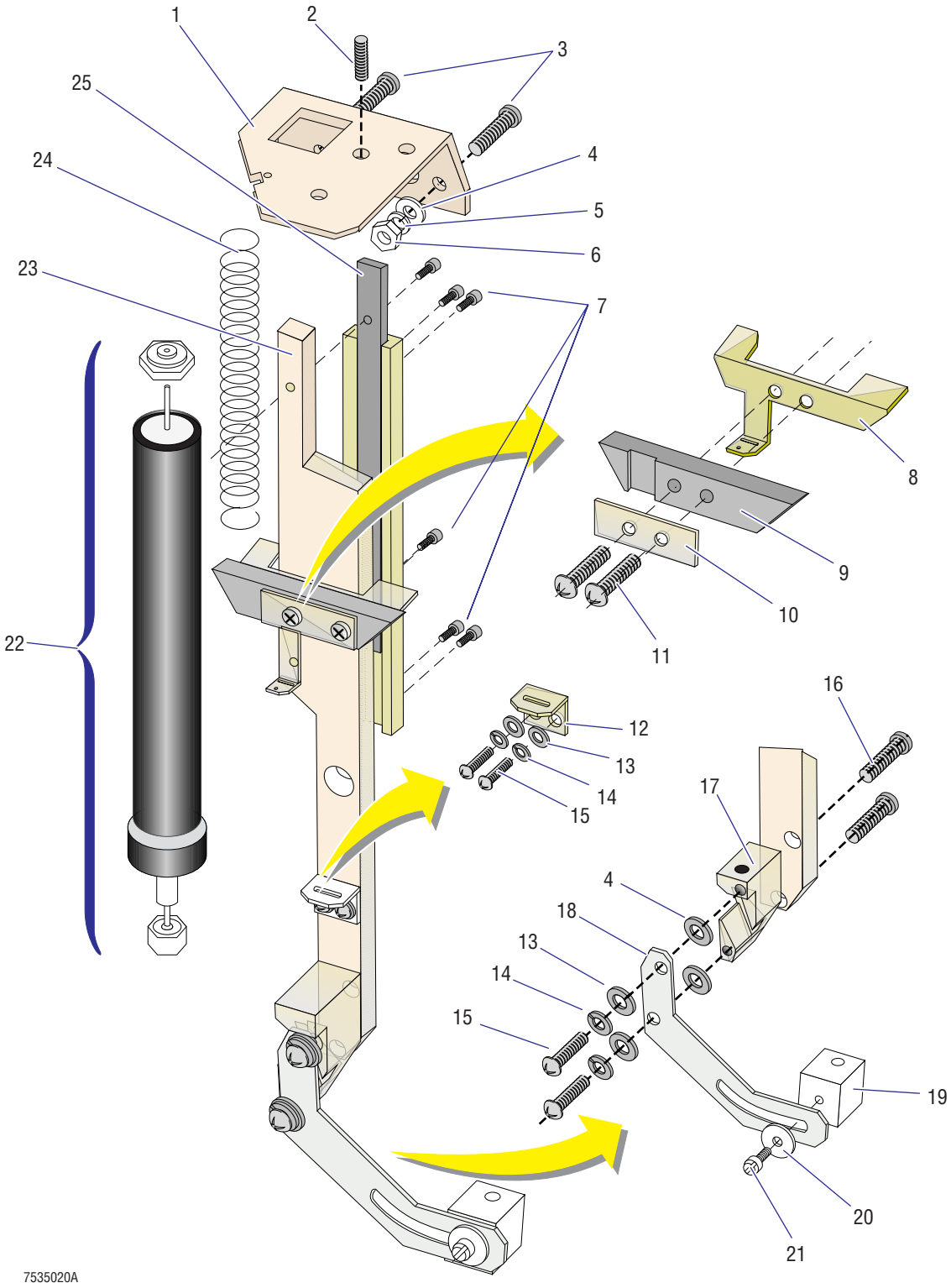

Table 8.2-9 BSV Module, Ball and Slide Assembly (See Figure 8.2-9)

Item	Part Number	Description
1	6857953	Bracket, cylinder mounting (CL3)
2	2851918	Setscrew, 6-32, rinse block, adjustment
3	2806090	Screw, pan head, #6-32 x 0.50 (for CL3)
4	2827134	Washer, flat, #6, 0.56 i.d. x 0.375 o.d. x 0.046 thick (for CL3 bracket)
5	2826035	Washer, split lock, #6, 0.14 i.d. x 0.25 o.d. x 0.031 thick (for CL3 bracket)
6	2822030	Nut, hex, #6-32 unc x 0.312AF x 0.114 thick (for CL3 bracket)
7	2804083	Screw, hex, #4-40 x0.25 (for ball slide)
8	1020539	Retainer, tube (inner ball-slide stop)
9	1020521	Stop, ball slide
10	1020529	Retainer, tube (outer ball-slide stop)
11	2804074	Screw, machine, #4-40 x 0.31, flat82-HD (for ball-slide stop)
12	1020163	Retainer, tube (lower ball slide)
13	2827133	Washer, flat, #4 (for lower tube retainer)
14	2826002	Washer, split lock #4 (for lower tube retainer)
15	2804005	Screw, pan head, #4-40 x 0.25 (for lower tube retainer, rinse block arm)
16	2804011	Screw, machine, #4-40 x 0.25, flat82-HD (for rinse block arm)
17	1020525	Spacer, rinse block support
18	1020527	Rinse block arm, secondary
19	7000082	Rinse block
20	2827087	Washer, flat, vinyl (for rinse block)
21	2851915	Screw, shoulder, rinse block, securing
22	6232357	Cylinder, air pot, backwash arm (CL3)
23	6858031	Ball slide extension
24	2515004	Spring, fxt, 0.310 d (ball-slide return)
25	2823550	Bearing, ball slide

Figure 8.2-10 Pump Module (See Table 8.2-10)

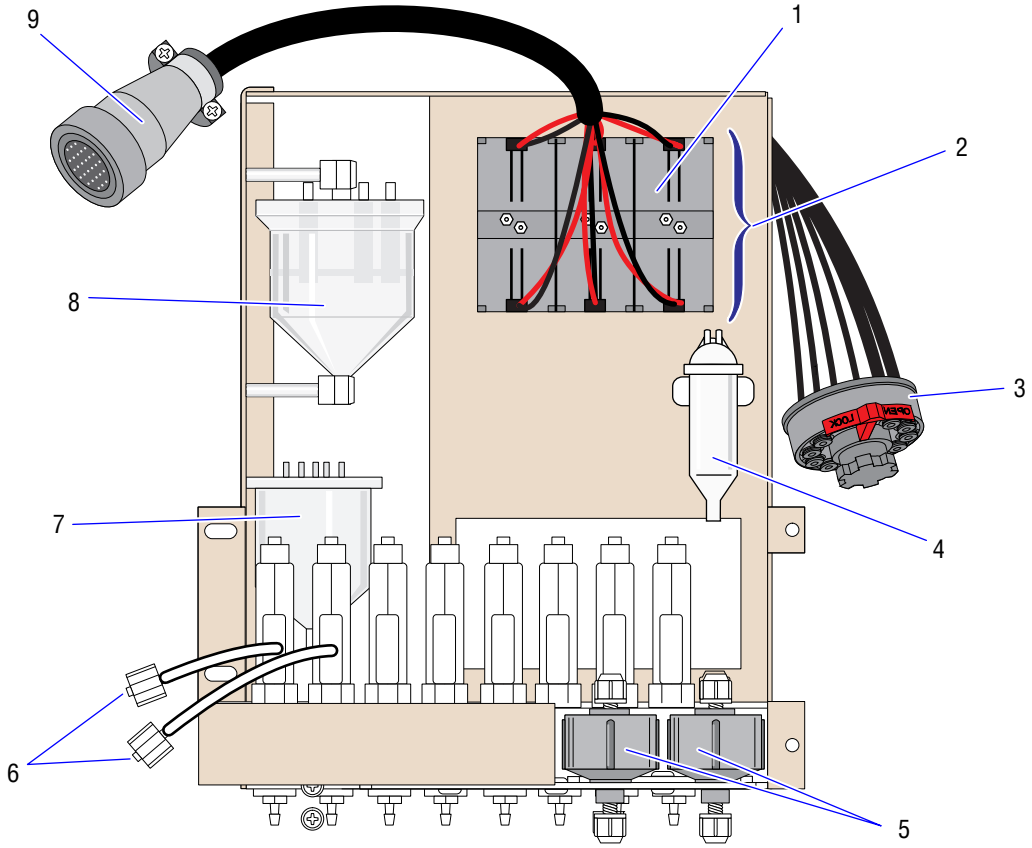

Table 8.2-10 Pump Module (See Figure 8.2-10)

Item	Part Number	Description
	7000634	HmX Pump module, FRU
1	6232985	Solenoid, Clippard, 3-way
2	6232982	Manifold, 6-port solenoid with solenoids
3	6232443	Quick disconnect, male
4	6859138	Foam trap, 3-port (FMT1)
5	7000063	Pumps, matched set, Erythrolyse II reagent
6	6232434 6232436	Ring, Luer lock, white (use with PN 6232435 and PN 6232436) Fitting, Luer, 0.094 i.d., female
7	6854848	Chamber, isolator (VC4 with screen)
8	7000381	Chamber, isolator (VC3 with screen)
9	6806727	Harness, Pump module

Figure 8.2-11 Rotary Cap-Pierce Module (See Table 8.2-11)

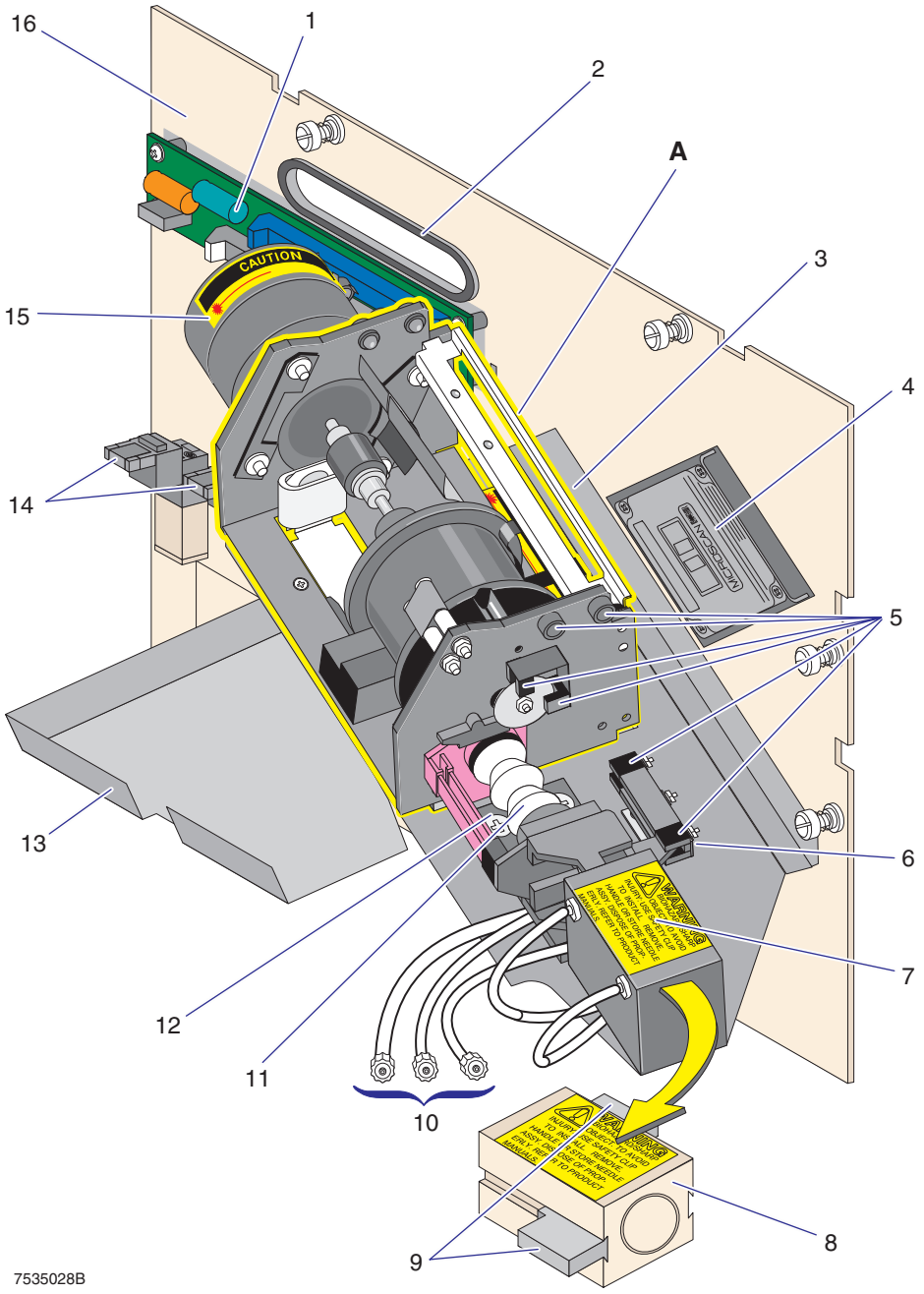

Figure Reference

A Figure 8.2-12

Table 8.2-11 Rotary Cap-Pierce Module (See Figure 8.2-11)

Item	Part Number	Description
	7000636	Rotary Cap-Pierce module
1	6705746	RCP Junction II card
2	2830029	Grommet, black trim
3	Reference	Bracket, cap piercer
4	7000042	Laser bar-code reader
5	6857949	Harness, carousel/needle sensors and LEDs
6	1024688 1024689	Bracket, dual opto sensor, needle position Sensor guide (mounts on PN 1024688)
7	6232461	Cylinder, air, needle pierce (CL5)
8	6232999	Cylinder, air, with magnet
9	6805584	Sensor, Hall effect (for Rotary Cap-Pierce module only)
10	6232434 6232436	Ring, Luer lock, white (use with PN 6232435 and PN 6232436) Fitting, Luer, 0.094 i.d., female
11	7000635	Needle cartridge, HmX RCP, FRU
12	1020594	Friction pad, needle slide
13	6806682 6806683	Support block, removable catch tray Tray, tube catch, removable (mounted on PN 6806682)
14	6232376	Solenoid, 5-way
15	7000057	Motor, carousel (order four each PN 2523615 elastic shock mounts)
16	Reference	Panel, carousel, auto-pierce

Figure 8.2-12 Rotary Cap-Pierce Module, Carousel Assembly (See Table 8.2-12)

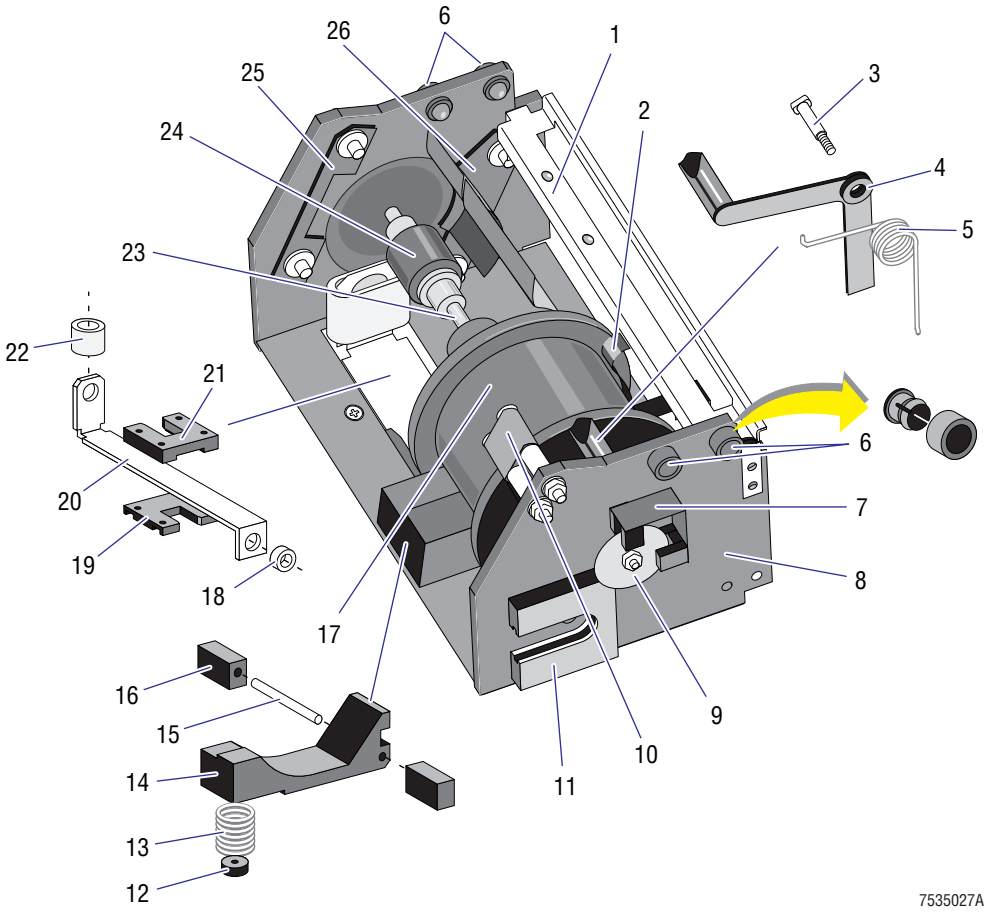

Table 8.2-12 Rotary Cap-Pierce Module, Carousel Assembly (See Figure 8.2-12)

Item	Part Number	Description
	7000638	Carousel assembly, HmX RCP
1	6806721	Bracket, channel carousel, with LED and harness
2	1020950	Cradle guide
3	2851768	Pin, pivot, tube available sensor
4	6857787	Lever, tube available sensor
5	1020694	Spring, tube available sensor
6	2838063	Holder, panel, grommet for LED
7	1020044	Bracket, code-wheel sensor
8	6806670	Bracket, HmX carousel, black
9	1020054	Code wheel
10	1024703	Tube ejector (spacer two each, PN 2843056)
11	6859238	Retainer, Retainer, needle cartricge, front
12	1014581	Spring, holder
13	2515017	Spring, compression, cap-piercer, tube retainer
14	1020230	Saddle guide (hinge block PN 1014599, pin PN 2831012)
15	2831012	Pin, dowel (saddle guide)
16	1014599	Hinge block (saddle guide)
17	6858040	Carrier, tube holder (setscrews PN 2807080)
18	1014725	Spacer, tube clamp to air cylinder
19	1020576	Guide, lower, tube clamp
20	6859030	Bracket, tube clamp with bumper
21	1020577	Guide, upper, tube clamp
22	3213199	Bumper, rubber, tube clamp
23	1020571	Shaft, stub, threaded
24	2523199	Coupling, flex shaft
25	6858029	Nut plate (fits on motor vial guide side of carousel)
26	1020745	Vial guide, molded plastic, covers half of carousel shaft

Figure 8.2-13 Autoloader Module, Front View (See Table 8.2-13)

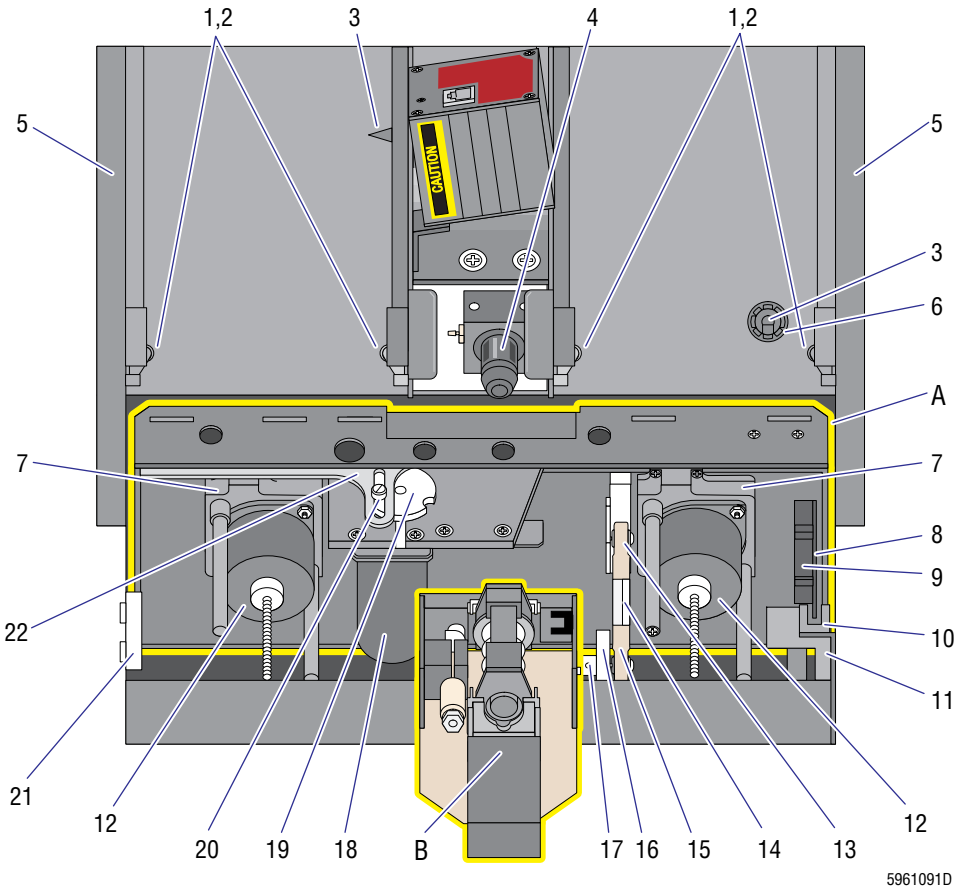

Figure Reference

A Rocker bed hardware and sensors, Figure 8.2-15

B Needle assembly and sensors, Figure 8.2-16

Table 8.2-13 Autoloader Module, Front View (See Figure 8.2-13)

Item	Part Number	Description
	7000640	Autoloader module
1	1021600	Wheel, cassette shelf
2	1021601	Roller, cassette shelf
3	1021412	Actuator sensor, cone sensor
4	2851722	Tip, tube ram (use with Tube-ram insert [button] PN 1022607)
5	1021569	Spring, cassette shelf
6	1021311	Actuator body, cone sensor
7	1021393	Plate, motor mount
8	6858381	Encoder disk
9	1021599	Lock wheel, rocker bed
10	6858507	Sensor and harness, 15 in. (bed position sensor)
11	7000651	Bed lock assembly
12	6858505	Motor, cassette, lift
13	2523683	Rod bearing, right
14	1021293	Pivot-link drive
15	2523684	Rod bearing, left
16	6858474	Hub, pivot, rocker motor
17	2804083	Screw, rocker motor hub
18	6858506	Index motor, cassette
19	1021292	Hub, index motor
20	2851227	Screw, index hub shoulder
21	6858501	Interlock door switch
22	6858383	Link drive

Figure 8.2-14 Autoloader, Rear View (See Table 8.2-14)

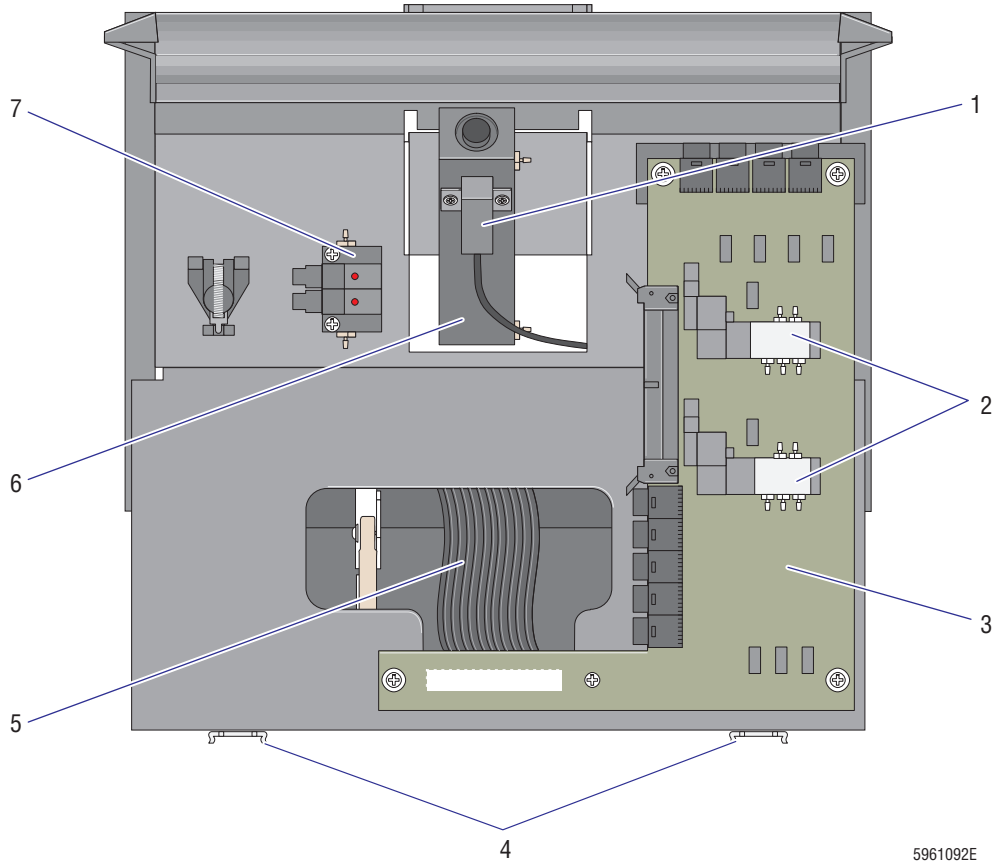

Table 8.2-14 Autoloader, Rear View (See Figure 8.2-14)

Item	Part Number	Description
1	6858499	Tube-ram sensor and harness
2	6232376	Solenoid valve, SMC, 5-way
3	6706469	Autoloader Interface card (CE)
4	6858413	Slide, rack, ball
5	6028385	Cable, ribbon, flat, Autoloader
6	6232597	Cylinder, tube ram
7	6232568	Solenoid manifold, SMC, dual bank

Figure 8.2-15 Autoloader, Rocker Bed Hardware and Sensors (See Table 8.2-15)

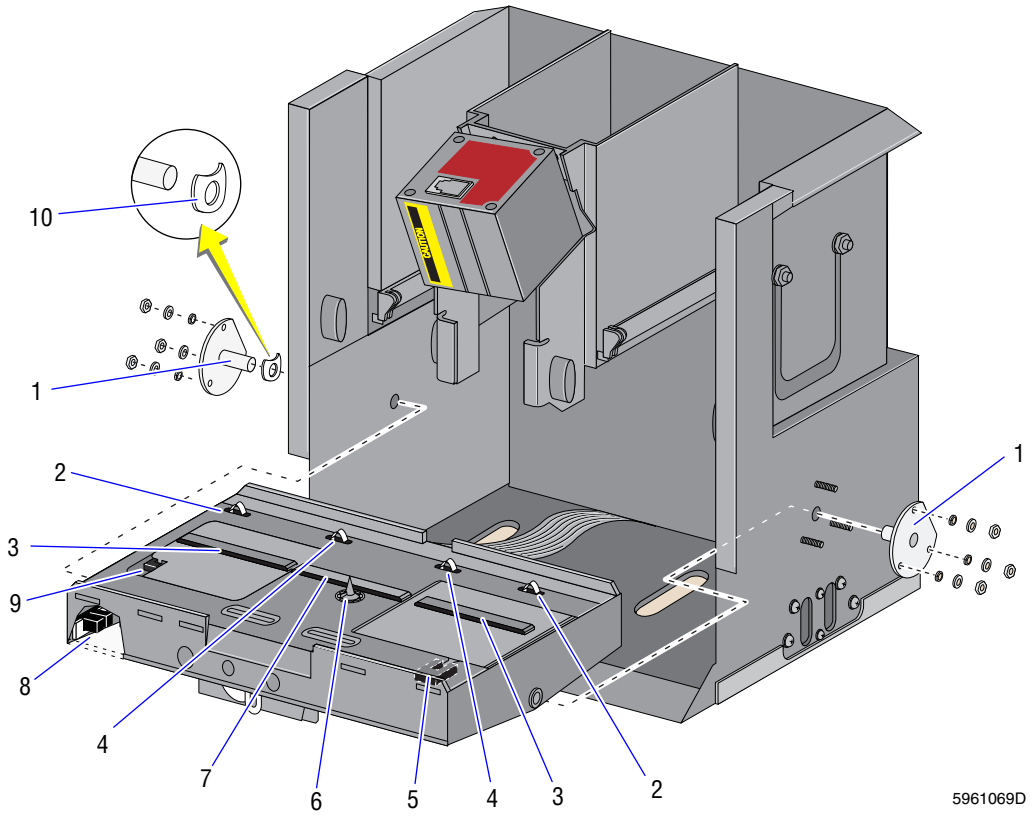

Table 8.2-15 Autoloader Module, Rocker Bed Sensors and Hardware (See Figure 8.2-15)

Item	Part Number	Description
	7000639	Rocker bed assembly
1	1021296	Pin, pivot
2	6858739	Sensor and harness, cassette 0 and 3
3	1021634	Guide, cassette platform
4	6858741	Sensor and harness, cassette 1 and 2
5	6858609	Load (right) elevator down sensor and harness
6	6858496	Tube available sensor and harness, 7 in.
7	1022161	Guide, cassette bed
8	6858494	Full cassette index rotation sensor and harness, 13 in.
9	6858498	Unload (left) elevator down sensor and harness
10	2851892	Washer, spring

Figure 8.2-16 Needle Assembly and Sensors (See Table 8.2-16)

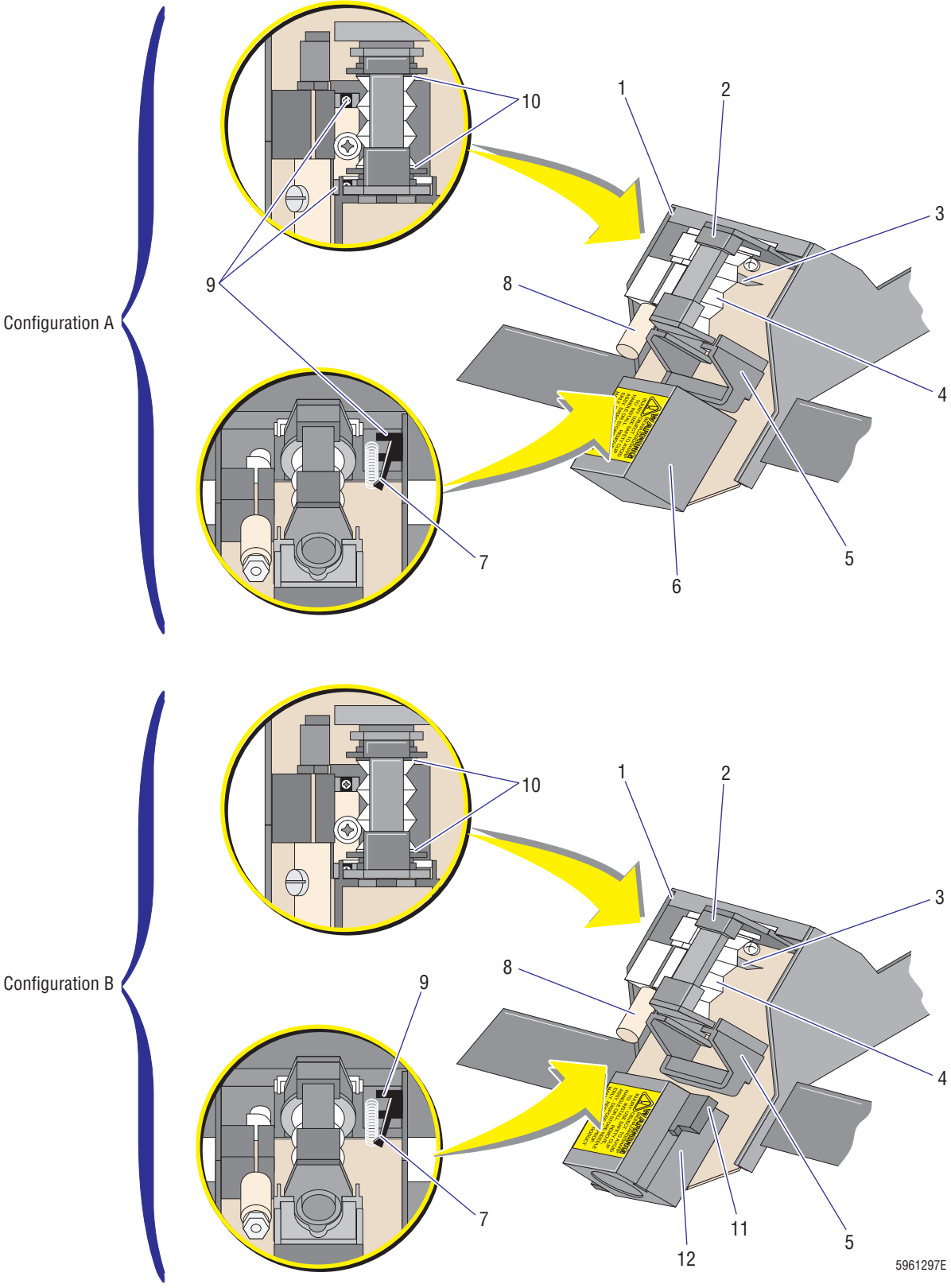

Table 8.2-16 Autoloader Module Needle Assembly and Sensors (See Figure 8.2-16)

Item	Part Number	Description
1	6858476	Dead plate
2	7000645	Needle cartridge
3	6859268	Guide, needle slide
4	1021655	Bellows, needle
5	7000201	Bracket, needle cartridge driver
6	6232620	Cylinder, needle
7	1022462	Tube-forward sensor arm
8	6232601	Cylinder, tube return
9	6858507	Sensor and harness, 15 in. (tube forward, needle forward, and needle home sensors on Configuration A, tube forward sensor on Configuration B)
10	1022099	Retainer, bellows
11	6806247	Sensor, Hall effect (for Autoloader module only)
12	6232999	Cylinder, air, with magnet

Figure 8.2-17 Triple Transducer Module (See Table 8.2-17)

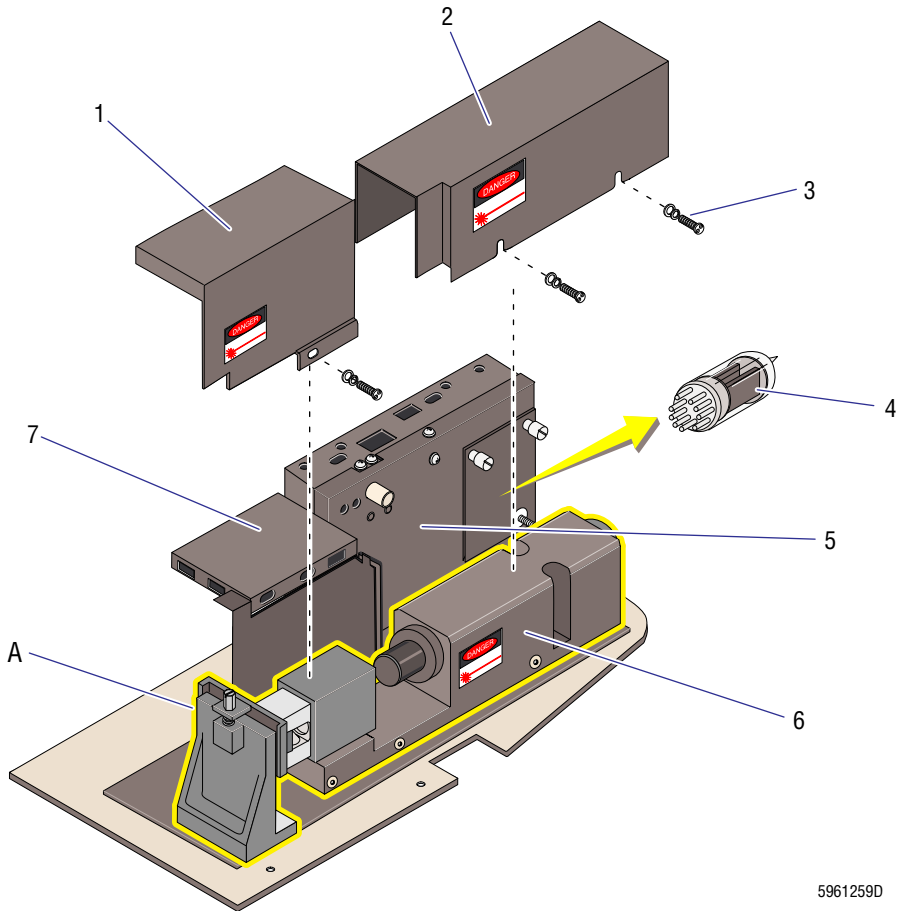

Figure Reference

A Flow cell and laser assembly, Figure 8.2-18

Table 8.2-17 Triple Transducer Module (See Figure 8.2-17)

Item	Part Number	Description
	7000646	TTM assembly, complete
1	6858361	Shield, flow cell (cover)
2	1020249	Shield, magnetic (laser cover)
3	2851566	Screw, tamperproof
4	5704031	Vacuum tube, RF triode, 12AU7A (new style)
5	6859777	RF Detector Preamp #6 assembly
6	7000038	Base and laser mount
7	6859066	LS Preamp 5 module

Figure 8.2-18 Flow Cell and Laser Assembly (See Table 8.2-18)

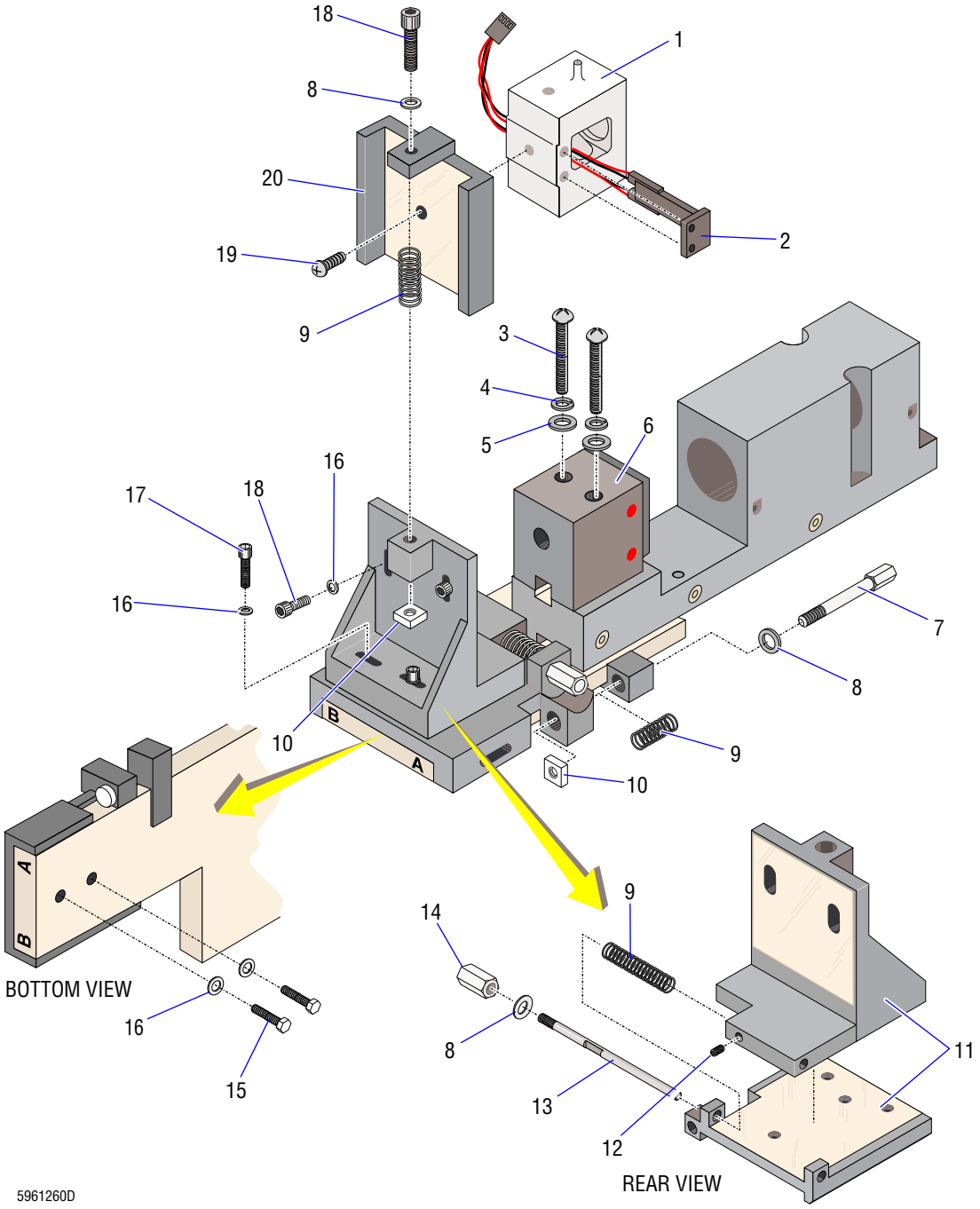

Table 8.2-18 Flow-Cell and Laser Assembly (See Figure 8.2-18)

Item	Part Number	Description
1	6706039	Flow cell, coated and tested
2	6706013	Sensor, LS, 3-element (Rev. B), for retic ready units (use with LS Preamp 3 module)
3	2808131	Screw, 2.25 l, #8 x 32, pan-hd, xrec
4	2826048	Washer, flat, #2, 0.094 i.d. x 0.188 o.d. x 0.028 thick
5	2827135	Washer, flat, #8, 0.187 i.d. x 0.438 o.d. x 0.063 thick
6	7000551	Lens block
7	2851567	Screw, threaded, 1.57 l, #10 x 56, Y- and Z-axes alignment
8	2827160	Washer, flat, #8, 0.188 i.d. x 0.375 o.d. x 0.045 thick, X/Y/Z alignment shaft
9	2515158	Spring, TTM X-, Y-, Z-alignment shafts
10	2851569	Nut, square, #10, used on Y- and Z-axes
11	6856153	Plates, TTM, horizontal and vertical adjustment
12	2807038	Setscrew, 10-32 x 0.25 long, hex (flow-cell lock down)
13	1017940	Shaft, TTM, X-axis (horizontal) adjustment
14	2851568	Nut, hex, #10, used on X-axis
15	2852276	Screw, 0.62 long, #8 x 32, hex-head, ehex
16	2852270	Washer, lock, spring, 0.164 i.d. x 0.343 o.d. x 0.013 thick
17	2851614	Screw, 0.62 long, #8 x 32, TTM lock down
18	2808110	Screw, 0.50 long, #8 x 32, hsc-head, hex
19	2806009	Screw, 0.25 long, #6 x 32, pan-head, xrec (flow-cell mount)
20	1019356	Plate, TTM, flow-cell mounting (Rev. C)

Figure 8.2-19 Main Diluter Module (See Table 8.2-19)

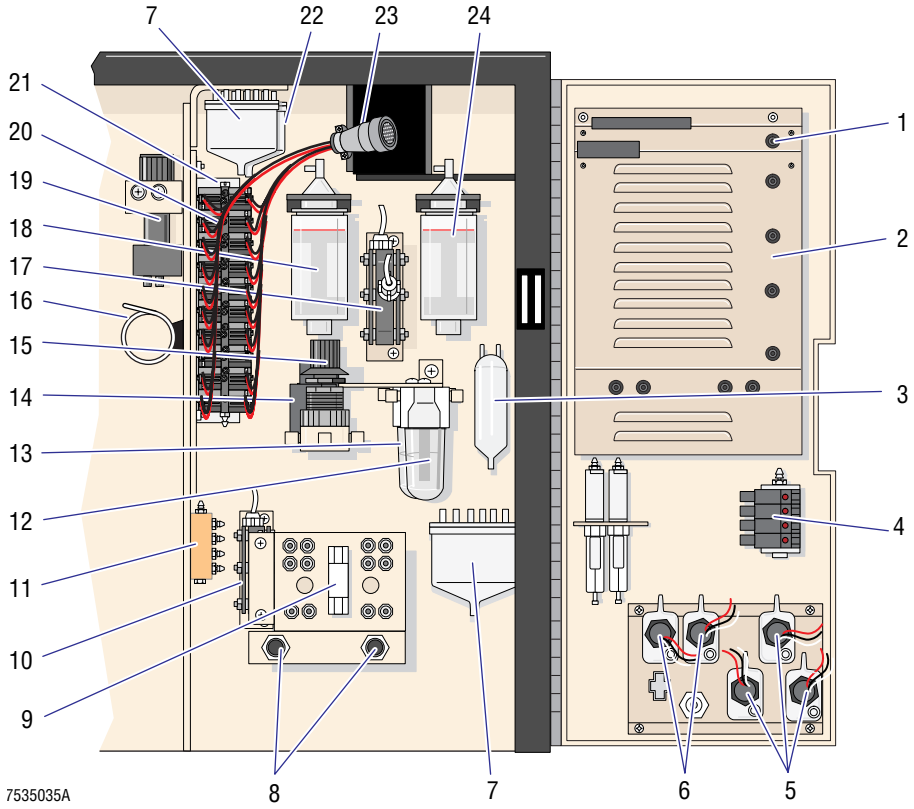

Table 8.2-19 Main Diluter Module (See Figure 8.2-19)

Item	Part Number	Description
	6706638	Main Diluter module
1	6705768	Fluid Detector/Ram Pressure card
2	7000020	Pneumatic Monitor card
3	6859138	Foam trap, 3-port (FMT2)
4	6232984	Manifold, valve actuator, 4 station, with solenoids
5	7000607	Optical reagent sensor and housing (lytic reagent and PAK)
6	7000606	Optical reagent sensor and housing (diluent and cleaning agent)
7	7000380	Chamber, isolator (VC6, VC7)
8	7000071	Regulator, sample/sheath pressure (RG3, RG4)
9	6856319	Pinch valve, triple
10	6806053	Pump, backwash, 3 mL (PM8)
11	6854671	Manifold, 30 psi (MF14)
12	7000068	Water trap, vacuum (FL1)
13	7000067	Water trap, compressor (FL2)
14	7000070	Solenoid, condensate drain (LV43)
15	7000069	Regulator, 30 psi (RG2)
16	7000055	Choke, sheath, #2, reg (CK30)
17	7000064	Pump, dispense, 5 mL (PM10, cleaning agent) (PN 6806058)
18	6912099	Dispenser, WBC, 6 mL
19	7000145	Regulator, low vacuum (RG1) (PN 6232628)
20	6232985	Solenoid valve, Clippard, 3-way
21	6232983	Manifold, valve actuator, 20-station, with solenoids
22	6854732	Chamber, isolator (VC1, VC5)
23	6806724	Harness, Main Diluter module, P50 to J81
24	6905043	Dispenser, RBC, 10 mL

Figure 8.2-20 Electronic Power Supply, Top View (See Table 8.2-20)

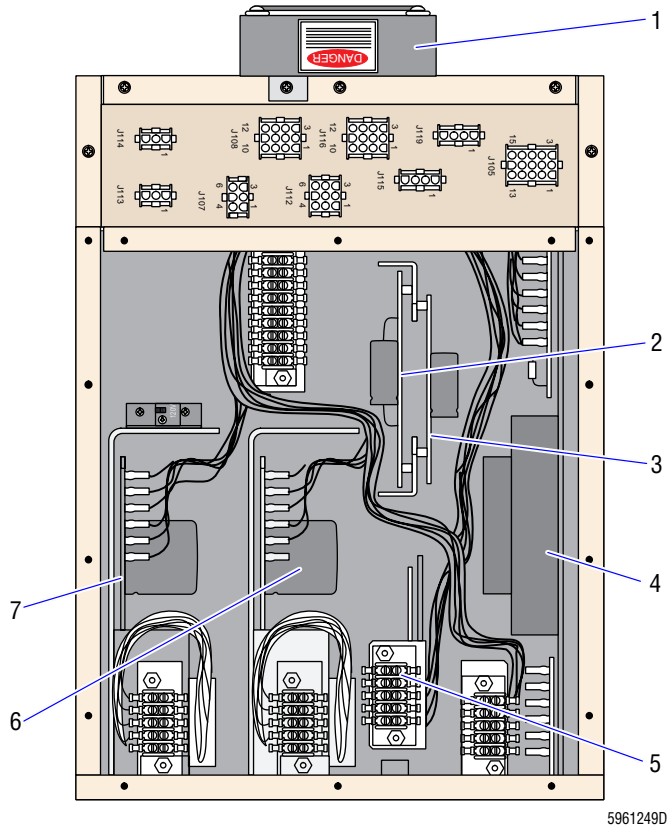

Table 8.2-20 Electronic Power Supply, Top View (See Figure 8.2-20)

Item	Part Number	Description
	7000627 7000628 7000629	Electronic Power Supply module, 100 Vac (CE) Electronic Power supply module, 120 Vac (CE) Electronic Power Supply module, 220/240 Vac (CE)
1	7000066	Fan, Electronic Power Supply module, toroid, 24 Vdc
2	7000043 7000044 7000045	Aperture Voltage/Power Fail Detect card, 100 Vac Aperture Voltage/Power Fail Detect card, 120 Vac Aperture Voltage/Power Fail Detect card, 220 Vac
3	7000046	Power supply, RF
4	7000003	Power supply, +5 Vdc, 12 A ±15 Vdc (PS3)
5	7000001	Power supply, +5 Vdc, 5 A (PS7, 5.6 V supply)
6	7000000	Power supply, +24 Vdc (PS4)
7	7000002	Power supply, +12 Vdc, 6.3 A (PS6)

Figure 8.2-21 Pneumatic Power Supply, Left-Side View (See Table 8.2-21)

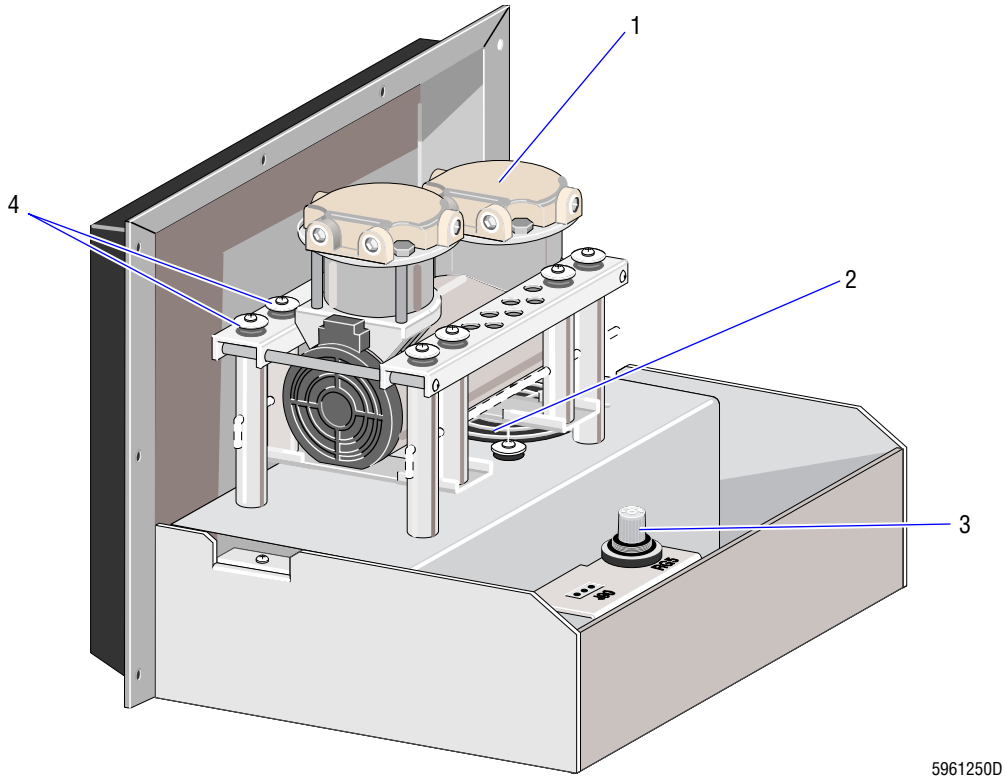

Table 8.2-21 Pneumatic Power Supply, Left-Side View (See Figure 8.2-21)

Item	Part Number	Description
	7000630 7000631 7000632	Pneumatic Power Supply module, 100 Vac Pneumatic Power Supply module, 100/120 Vac Pneumatic Power Supply module, 220/240 Vac
1	6232657 6232658	Pump, vacuum/pressure, 100/115 Vac Pump, vacuum/pressure, 220/230 Vac
2	2602022 2602023	Fan, 230 Vac (use with Pneumatic Power Supply module, 220/240 Vac) Fan, 115 Vac (use with Pneumatic Power Supply module, 100/110 Vac)
3	6208005	Regulator, 60 psi
4	2523590	Mount, compressor shock, 6 lb

Figure 8.2-22 Analyzer Module, Card Cage Components (See Table 8.2-22)

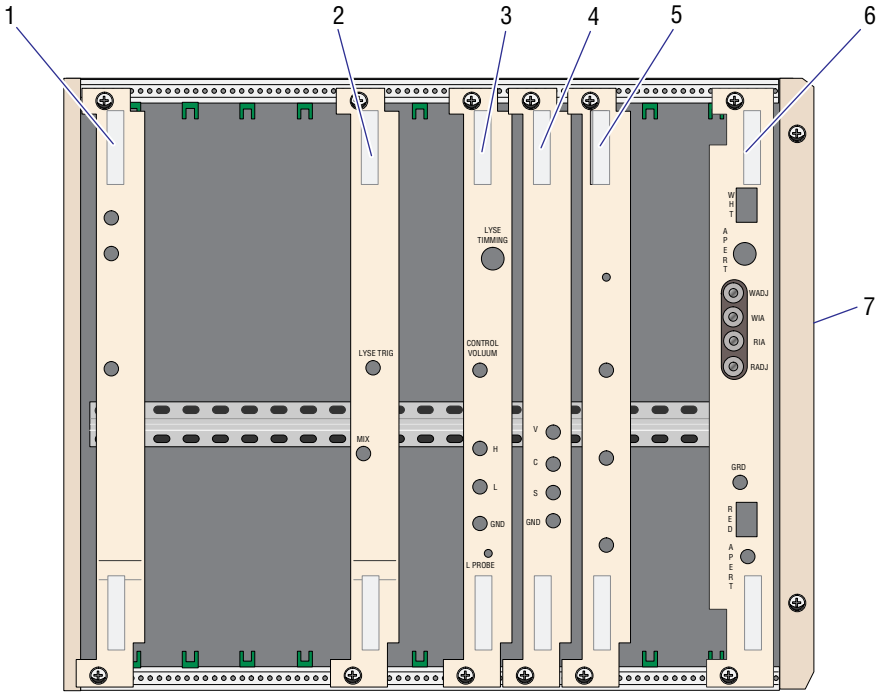

Table 8.2-22 Analyzer Module, Card Cage Components (See Figure 8.2-22)

Item	Part Number	Description
1	7000026	376 CPU card
2	7000024	DILUTER INTERFACE card
3	7000023	I/O card
4	7000028	VCS PROCESSOR card
5	7000027	R/W/P PROC card
6	7000025	R/W Preamp card
7	6858109	Card cage, with backplanes

Figure 8.2-23 Wire Harness Components (See Table 8.2-23)

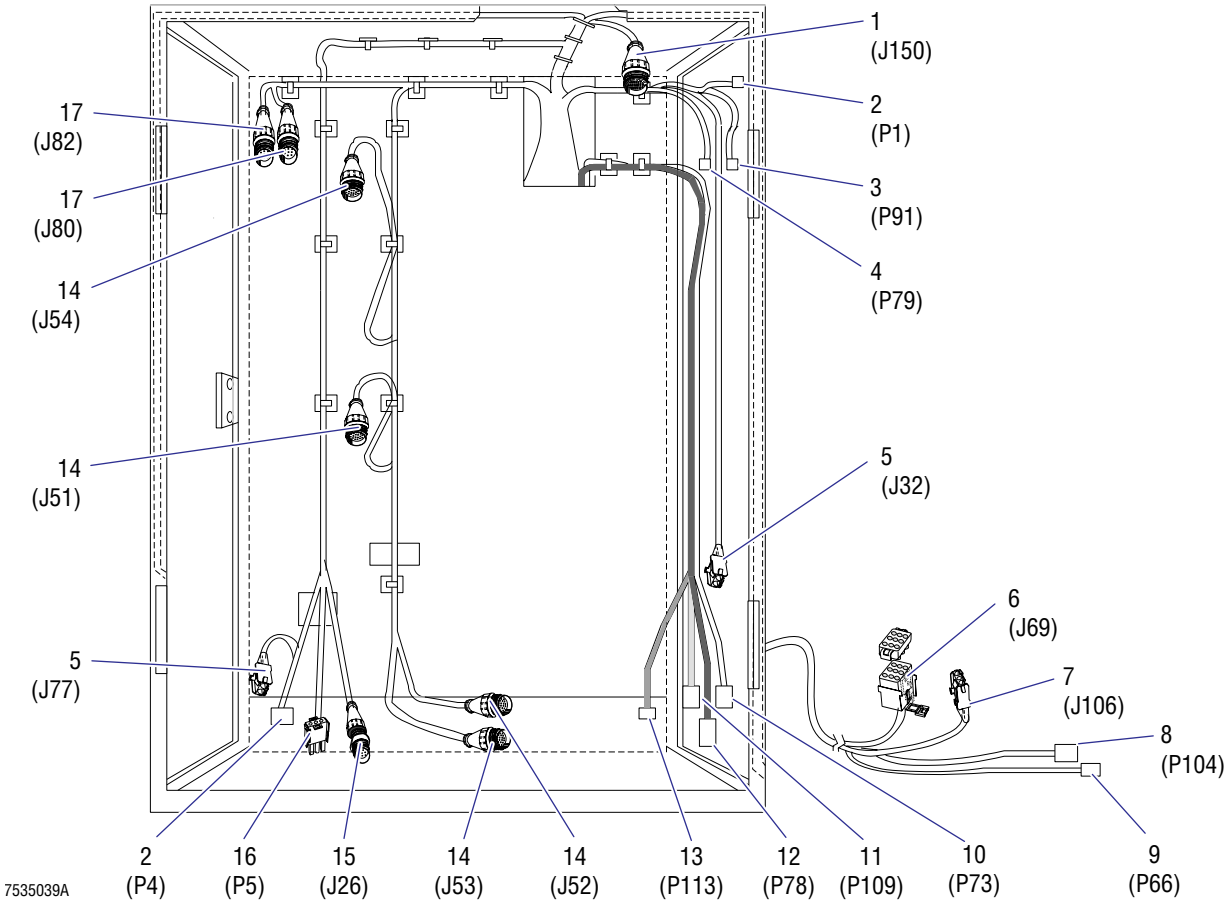

Table 8.2-23 Wire Harness Components (See Figure 8.2-23)

Item	Part Number	Description
1	2104208 2121687	Clamp, connector, circular (J50) Connector, circular, 57-pin (J50)
2	2121442	Connector (P1, P4 for Peltier module)
3	2121280	Connector (P91)
4	2104318 2121454	Contact, socket, 24-20 AWG, square post (P79) Connector (P79)
5	2104357	Connector, two conductor, universal Mat-N-LK (J32 for instruments with optical reagent sensors, and J77)
6	2104351 2121426 2121436	Connector, nine conductor, universal Mat-N-LK, female (J69 for TTM) Nine-position assembly module (J69 for TTM) Adapter (J69 for TTM)
7		Connector, 3-conductor (J106 for TTM)
8	2104318 2121415	Contact, socket, 24-20 AWG, square post (P104 for RF Detector Preamp card) Connector, 4-position (P104 for RF Detector Preamp card)
9	2104318 2121328	Contact, socket, 24-20 AWG, square post (P66 for LS Preamp module) Connector, 3-position (P66 for LS Preamp module)
10	6027923	Cable, RF Detector Preamp card to backplane (P73)
11	6705938	Harness, Retic Interface, and card (P109)
12	6028274	Cable, LS Preamp module to backplane (P78 to P49)
13	6028480	Cable, LS LS offset monitor (P113 to P7 [A13 and B38])
14	2104334 2121684	Clamp, connector, circular (J51, J52, J53, J54) Connector, circular, 28-pin (J51, J52, J53, J54)
15	2104258 2121685	Clamp, connector, circular (J26) Connector, circular, 8-pin (J26)
16	2104360	Connector, 3-position, male (P5 for Peltier module)
17	2104258 2104339	Clamp, connector, circular (J80, J82) Connector, circular, 8-pin (J80, J82)

Figure 8.2-24 Electrical Connectors

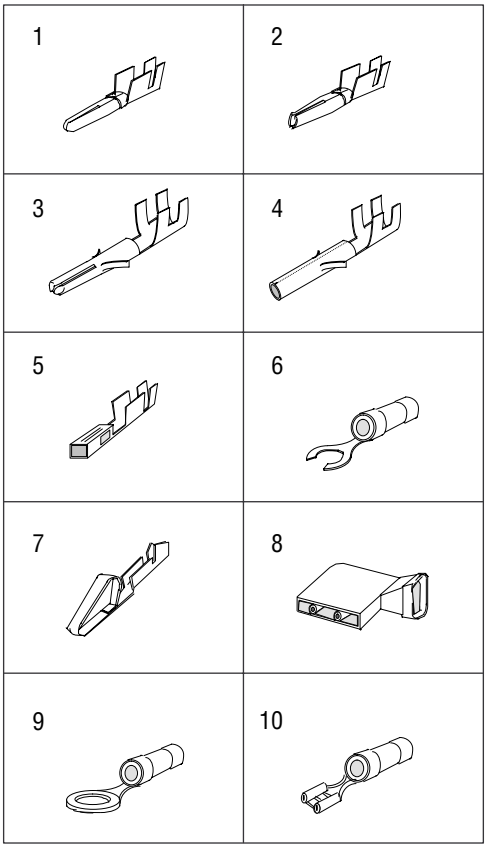

5961276D

Table 8.2-24 Electrical Connectors

Item	Part Number	Description
1	2104189	Contact, pin, 24-20
2	2104190	Contact, socket
3	2104348	Pin, connector, universal Mat-N-LK, 24-18 AWG, brass
4	2104349	Socket T, connector, universal Mat-N-LK, 24-18 AWG, brass
5	2104318 2121421	Contact, socket, 24-20 AWG, square post Contact, socket, 26-22 AWG, square post
6	2113052	Terminal, solderless, #5 spring spade, 22-16 AWG
7	2104418	Holder, socket, crimp terminal, 24-18 AWG, Molex
8	2121420	Terminal, solderless receptacle, 90 degree, 22-18 AWG
9	2113022 2113018 2113010	#6 ring, 16-14 AWG, insulated #6 ring, 22-16 AWG, insulated #8 ring, 22-16 AWG, insulated
10	2113053 2121050 2113045	Terminal receptacle, 22-18 AWG Terminal receptacle, 22-18 AWG Terminal receptacle, 22-18 AWG

QUICK REFERENCE INFORMATION, A.1-1

A.1 TOLERANCES AND LIMITS, A.1-1
Calibration Tolerances, A.1-1
Electronic Noise Limits, A.1-2
Performance Specifications, A.1-2
Background Counts, A.1-2
Carryover Limits, A.1-2
Reproducibility/Precision Limits, A.1-3
Secondary Mode- to- Primary Mode Comparison, A.1-4
Pneumatic Tolerances, A.1-5
Power Input Specifications and Typical Consumption, A.1-5
Input Power, A.1-5
Input Line Interference, A.1-5
Power Consumption, A.1-6
Timing, A.1-7
VCS Optimization Limits, A.1-8
Voltages, A.1-9
Sample Handler Cards, A.1-9
System, A.1-9
Volumes, A.1-10
Aspiration Pump, Primary Mode, A.1-10
Diluent Dispensers, A.1-10
CBC Lytic Reagent Pumps' Volume Tolerance, A.1-10

A.2 CIRCUIT CARDS - JUMPERS AND TEST POINTS, A.2-1
376 CPU Card, A.2-1
Jumper Settings, A.2-1
Autoloader Interface Card, A.2-2
Connectors, A.2-2
DILUTER INTERFACE Card, A.2-3
Jumper Setting, A.2-3
Test Point, A.2-3
Fluid Detector/Ram Pressure Card, A.2-4
Connectors, A.2-4
LEDs, A.2-4
I/O Card, A.2-5
Jumper Settings, A.2-5
Peltier Controller Card, A.2-6
Connectors and LEDs, A.2-6
Pneumatic Monitor Card, A.2-7
Connector, A.2-7
Test Points, A.2-8
RAM Timer Card, A.2-9
Jumper Settings, A.2-9
Rocker Bed Interface Card, A.2-10
Connectors, A.2-10
R/W/P PROC Card, A.2-11
Jumper Settings, A.2-11
Test Points, A.2-11

Sample Handler Card, A.2-12
Blood/Bubble Detector Adjustments and Test Points, A.2-12
Connectors, A.2-12
Jumper Settings, A.2-12
LEDs, A.2-13
VCS PROCESSOR Card, A.2-14
Jumper Setting, A.2-14
Test Points, A.2-14

A.3 POWER SUPPLIES - SWITCH SETTINGS; FUSE RATINGS; AND CONNECTIONS, JUMPERS, AND TEST POINTS, A.3-1
Power Switch Settings, A.3-1
Fuse Ratings and Functions, A.3-1
Electronic Power Supply, A.3-2
Jumpers and Connections, A.3-2
Test Points and Adjustments, A.3-2
Laser Power Supply, A.3-4
Jumpers and Connections, A.3-4
Pneumatic Power Supply, A.3-4
Jumpers and Connections, A.3-4

A.4 SOFTWARE SETTINGS, A.4-1
Bar-Code Reader Decoder Card, A.4-1

A.5 DILUTER COMPONENT LOCATIONS AND FUNCTIONS, A.5-1

A.6 SOFTWARE MENU TREES, A.6-1

B DMS DATABASE FIELDS, B.1-1

B.1 FIELDS CONTAINED IN THE HmX ANALYZER DATABASE, B.1-1
About the List, B.1-1
HmX Analyzer 1.3 Database Fields, B.1-1

ILLUSTRATIONS

A.1-1 Diluent and Lyse Timing Cycle, A.1-7

A.2-1 376 CPU Card Jumper Locations, A.2-1
A.2-2 Autoloader Interface Component Locations, A.2-2
A.2-3 DILUTER INTERFACE Card Component Locations, A.2-3
A.2-4 Fluid Detector/Ram Pressure Card Component Locations, A.2-4
A.2-5 I/O Card Jumper Locations, A.2-5
A.2-6 Peltier Controller Card Connector and LED Locations, A.2-6
A.2-7 Pneumatic Monitor Card Component Locations, A.2-7
A.2-8 RAM Timer Card Jumper Locations, A.2-9
A.2-9 Rocker Bed Interface Card Connector Locations, A.2-10
A.2-10 R/W/P PROC Card Component Locations, A.2-11
A.2-11 Sample Handler Card Component Locations, A.2-12
A.2-12 VCS PROCESSOR Card Component Locations, A.2-14

A.5-1 BSV Module, Front View, A.5-6
A.5-2 BSV Module, Rear View, A.5-7
A.5-3 CBC Module, Front View, A.5-7
A.5-4 CBC Module, Rear View, A.5-8
A.5-5 Main Diluter Module, Front View, A.5-8
A.5-6 Main Diluter Module, Right-Side View, A.5-9
A.5-7 Mixing Module, Front View, A.5-9
A.5-8 Mixing Module, Rear View, A.5-10
A.5-9 Pump Module, A.5-10
A.6-1 HmX Analyzer with Rotary Cap-Pierce Module Software Menu Tree, Revision 1.3, A.6-1
A.6-2 HmX Analyzer with Autoloader Module Software Menu Tree, Revision 1.3, A.6-2
A.6-3 Service Disk Software Utility Menu Tree, A.6-3

TABLES

A.1-1 Acceptable Cal Factor Ranges, A.1-1
A.1-2 Acceptable CV Limits for Initial Adjustments to 5C Cell Control, A.1-1
A.1-3 CBC Latex Calibration, A.1-1
A.1-4 RMS Noise Checks - CBC, A.1-2
A.1-5 Primary/Secondary-Mode Background Counts, A.1-2
A.1-6 Primary/Secondary-Mode Carryover Limits, A.1-2
A.1-7 Retic Mode-to-Mode and Within-Mode Carryover Limits*, A.1-2
A.1-8 Acceptable Blood Parameter Limits for Reproducibility Specimen, A.1-3
A.1-9 Acceptable Manual Diff Limits for Reproducibility Specimen, A.1-3
A.1-10 CBC and Diff Reproducibility Limits, A.1-4
A.1-11 Retics Reproducibility Limits, A.1-4
A.1-12 Secondary Mode-to-Primary Mode Comparison Limits, A.1-4
A.1-13 Pressure and Vacuum Tolerances, A.1-5
A.1-14 Input Line Interference Limits, A.1-5
A.1-15 Typical Power Consumption at 120 Vac, A.1-6
A.1-16 Diluent and Lyse Timing Acceptable Choke Combinations, A.1-7
A.1-17 LATRON™ Primer Background Limits, A.1-8
A.1-18 LATRON™ Control Calibration and Verification Limits, A.1-8
A.1-19 LS Offset Voltage, A.1-8
A.1-20 Noise Checks - Diff and Retic, A.1-8
A.1-21 Hgb Blank Voltage, A.1-9
A.1-22 Blood/Bubble Detectors Tolerances, A.1-9
A.1-23 System Voltage Ranges, A.1-9
A.1-24 Aspiration Pump Volume Tolerances, A.1-10
A.1-25 Diluent Dispenser Volume Specifications and Tolerances, A.1-10

A.2-1 376 CPU Card Jumper Settings (See Figure A.2-1), A.2-1
A.2-2 Autoloader Interface Card Connectors (See Figure A.2-2), A.2-2
A.2-3 Fluid Detector/Ram Pressure Card Connectors (See Figure A.2-4), A.2-4
A.2-4 Fluid Detector/Ram Pressure Card LED Positions (See Figure A.2-4), A.2-4
A.2-5 Peltier Controller Card Connectors and LEDs (See Figure A.2-6), A.2-6
A.2-6 Pneumatic Monitor Card Pneumatic Reading to Vdc Conversion (See Figure A.2-7), A.2-8
A.2-7 Rocker Bed Interface Card Connectors (See Figure A.2-9), A.2-10

A.2-8 R/W/P PROC Card Jumper Settings (See Figure A.2-10), A.2-11
A.2-9 R/W/P PROC Card Test Points (See Figure A.2-10), A.2-11
A.2-10 Sample Handler Card Connectors (See Figure A.2-11), A.2-12
A.2-11 Sample Handler Card Jumper Settings (See Figure A.2-11), A.2-12
A.2-12 Sample Handler Card LED Functions (See Figure A.2-11), A.2-13
A.2-13 VCS PROCESSOR Card Test Points (See Figure A.2-12), A.2-14

A.3-1 Input Power Switch Settings, A.3-1
A.3-2 Fuse Ratings and Functions, A.3-1
A.3-3 Electronic Power Supply Terminal Card Jumpers and Connections, A.3-2
A.3-4 Electronic Power Supply Test Points and Adjustments, A.3-2
A.3-5 Laser Power Supply Buck-Boost Transformer Jumpers and Connections, A.3-4
A.3-6 Pneumatic Power Supply Buck-Boost Transformer Terminal Card Jumpers and Connections, A.3-4

A.4-1 Bar-Code Reader Decoder Card Code Types Default Settings, A.4-1
A.4-2 Bar-Code Reader Decoder Card Communications Default Settings, A.4-1
A.4-3 Bar-Code Reader Decoder Card Operations Default Settings, A.4-2
A.4-4 Bar-Code Reader Decoder Card User Outputs Default Settings, A.4-2
A.5-1 Diluter Component Location References and Functions, A.5-1

A.1 TOLERANCES AND LIMITS

Calibration Tolerances

Table A.1-1 Acceptable Cal Factor Ranges

Parameter	Primary-Mode Cal Factor Minimum to Maximum Value		Secondary-Mode Cal Factor Minimum to Maximum Value
	Service Limits	Software Limits	
WBC	0.965 to 1.295	0.960 to 1.300	0.500 to 2.000
RBC	0.965 to 1.295	0.960 to 1.300	0.500 to 2.000
Hgb	1.005 to 1.381	1.000 to 1.386	0.500 to 2.000
MCV	0.805 to 1.055	0.800 to 1.060	0.500 to 2.000
Plt	0.930 to 1.345	0.925 to 1.350	0.500 to 2.000
MPV	0.880 to 1.145	0.875 to 1.150	0.500 to 2.000

Table A.1-2 Acceptable CV Limits for Initial Adjustments to 5C Cell Control

Parameter	CV (%)
WBC	≤2.0
RBC	≤1.5
Hgb	≤1.0
MCV	≤1.0
Plt	≤4.0
MPV	≤2.0

Table A.1-3 CBC Latex Calibration

Counts/Aperture Current Voltages	Service Limits	Performance Specifications
WBC count	3.0 to 30.0	
RBC count	0.006 to 0.050	
RBC mode	Assay value ±1.5 fL	
WBC mode	Assay value ±1.5 fL	
RBC aperture current	141.8 to 168.8 Vdc*	141.5 to 169.1 Vdc
WBC aperture current	100.9 to 129.3 Vdc*	100.6 to 129.6 Vdc

* Value obtained using System Test.

Electronic Noise Limits

Table A.1-4 RMS Noise Checks - CBC

TP (R/W/P PROC card)*	Specifications
RBC	≤18 mVac
WBC	≤75 mVac
PLT	≤59 mVac

* Read with a true RMS meter while the instrument is in the idle state.

For the RMS noise check specifications for Diff and Retic, see Table A.1-20, Noise Checks - Diff and Retic.

Performance Specifications

Background Counts

Table A.1-5 Primary/Secondary-Mode Background Counts

Parameter	Primary/Secondary Mode
WBC	0.4
RBC	0.04
Hgb	0.1
Plt	3.0
Diff	<80/100

Carryover Limits

Table A.1-6 Primary/Secondary-Mode Carryover Limits

Parameter	Primary/Secondary Mode
WBC	2%
RBC	1%
Hgb	2%
Plt	2%
Count	3%

Table A.1-7 Retic Mode-to-Mode and Within-Mode Carryover Limits*

	Limits†		
Rinse	**LLLL**	**MMMM**	**RRRR**
First rinse	N/A	≤394	N/A
Third rinse	≤215	N/A	≤265

* Ensure the blood sample used for this test has a diff cell count >6000/8192
† Numbers are in fields below the scatterplot in this format - LLLL/MMMM/RRRR.

Reproducibility/Precision Limits

ATTENTION: For reproducibility studies, use specimens with values that fall within the limits specified in Tables A.1-8 and A.1-9.

Table A.1-8 Acceptable Blood Parameter Limits for Reproducibility Specimen

Parameter	Low Limit	High Limit	Unit of Measure
WBC	3.6	9.9	x 10^3 cells/µL
RBC	3.9 (female)	5.0 (female)	x 10^6 cells/µL
	4.5 (male)	5.7 (male)	
Hgb	12.1 (female)	15.1 (female)	g/dL
	13.8 (male)	17.2 (male)	
Hct	36.1 (female)	44.3 (female)	%
	40.7 (male)	50.3 (male)	
MCV	82.2	97.4	fL
MCH	27.6	33.3	pg
MCHC	33.0	34.8	g/dL
RDW	11.6	13.7	%
Plt	202.0	386.0	x 10^3/µl
MPV	7.8	11.0	fL
LY	20.0	55.0	%
MO	2.5	10.0	%
NE	37.0	73.0	%
EO	0.5	11.0	%

Table A.1-9 Acceptable Manual Diff Limits for Reproducibility Specimen

Parameter	Low Limit	High Limit	Unit of Measure
Blasts	0	0.02	x 10^3 cells/µL
Atypical Lymphs	0	0.20	x 10^3 cells/µL
Bands	0	0.15	x 10^3 cells/µL
Metas	0	0.05	x 10^3 cells/µL
Promyelos	0	0.05	x 10^3 cells/µL
Eos	0	0.70	x 10^3 cells/µL
Basos	0	0.20	x 10^3 cells/µL
NRBC	0	2.00	
Platelet Clumps	None	None	

Table A.1-10 CBC and Diff Reproducibility Limits

CBC		5-Part Diff	
Parameter	**CV**	**Parameter**	**Maximum Range - Lowest to Highest**
WBC	2.0%	LY%	<2.74
RBC	1.5%	MO%	<2.74
Hgb	1.0%	NE%	<3.04
MCV	1.05	EO%	<1.44
RDW	2.0%	BA%	<1.34
Plt	4.0%		
MPV	2.5%		

Table A.1-11 Retics Reproducibility Limits

RET %	CV %*	2 SD*
<1.00	<20.85	0.416
>1.00 <4.00	<15.41	0.416
>4.00 <15.00	<13.59	1.232

* Whichever is greater.

Secondary Mode- to- Primary Mode Comparison

Table A.1-12 Secondary Mode-to-Primary Mode Comparison Limits

Parameter	Comparison Limits (whichever is greater)
WBC	±0.4 x 10^3 cells/µL or <5%
RBC	±0.20 x 10^6 cells/µL or <2%
Hgb	±0.3 g/dL or <2%
Plt	±20 x 10^3 cells/µL or <7.0%
LY%	4.04
MO%	4.04
NE%	4.24
EO%	2.04
BA%	2.04

Pneumatic Tolerances

Table A.1-13 Pressure and Vacuum Tolerances

Pressure*	Acceptable Range*	Vacuum*	Acceptable Range*
60 psi	55 - 65 psi	Hi Vac (22 in. Hg)	17 - 28 in. Hg
60 psi at peak load	≥38 psi	Low Vac (6.0 in. Hg)	5.94 - 6.06 in. Hg
30 psi	26 - 34 psi		
Sheath (6 psi)	5.8 - 6.2 psi		
Diff (0.8 psi)	0.1 - 1.0 psi		

*For equivalent voltage readings, see Table A.2-6.

Power Input Specifications and Typical Consumption

Input Power

The HmX analyzer must have its input power strapped to match the following correct input:

100 Vac ±10%	220 Vac ±10%
115 Vac ±10%	230 Vac ±10%
120 Vac ±10%	240 Vac ±10%

Input Line Interference

The instrument will operate as specified if the ac line interference remains within the limits specified in Table A.1-14.

Table A.1-14 Input Line Interference Limits

Line dropout	27 ms
Line sag	Withstands -20%, duration of 120 ms
Line surge	Withstands +20%, duration of 50 ms
Line oscillation	Withstands ±20%, 120 ms sag, 50 ms surge
Frequency variation	Withstands ±2 Hz, 17 ms low, 16 ms high
Harmonic distortion	Withstands 6%
Electrical fast transients	Withstands 5 ns pulses in all coupling modes, all lines at <0.5 kV (tested per IEC 801-5)
Surge immunity	Withstands surges in different coupling modes, up to 2 kV (tested per IEC 801-5)

Power Consumption

Table A.1-15 Typical Power Consumption at 120 Vac

Operating Status	Power at 120 Vac	Power at 132 Vac
Standby mode (POWER switch off)	10 W	15 W
Power up	770 W	910 W
Instrument idle (Peltier off)	490 W	570 W
Instrument off (Peltier on)	550 W	625 W
Cycling (Primary mode)	570 W	660 W
Compressor off (POWER switch on)	360 W	410 W

Timing

Pressure setting for CBC lytic reagent and diluent delivery timing check: 30 psi ±0.1

Figure A.1-1 Diluent and Lyse Timing Cycle

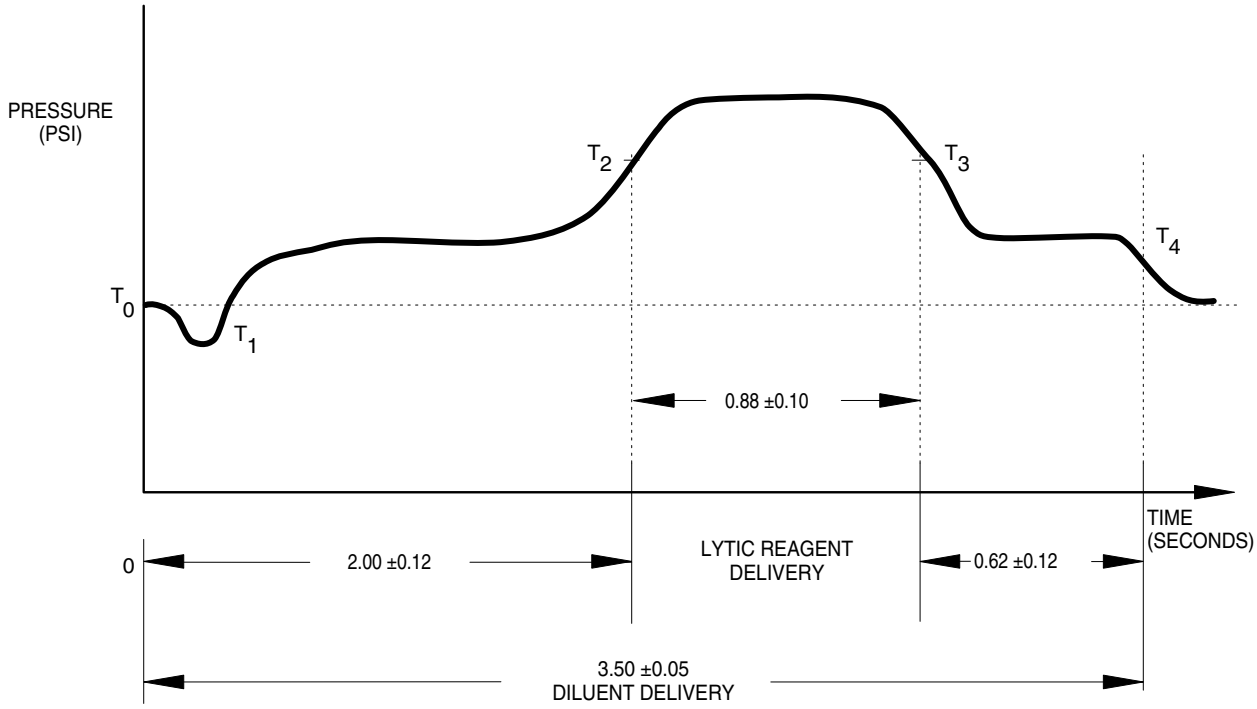

TIME	TOLERANCE	FUNCTION
T_0 - T_2	2.0 ±0.12 s	INITIAL WBC DILUENT DISPENSE BEFORE LYTIC REAGENT IS ADDED.
T_2 - T_3	0.88 ±0.10 s	LYTIC REAGENT ADDED.
T_3 - T_4	0.62 ±0.12 s	FINAL WBC DILUENT DISPENSE AFTER LYTIC REAGENT IS ADDED.
T_0 - T_4	3.50 ±0.05 s	TOTAL WBC DILUENT AND LYTIC REAGENT DISPENSE.

5961028D

Table A.1-16 Diluent and Lyse Timing Acceptable Choke Combinations

	CBC Lytic Reagent Pumps*	
WBC Diluent Dispenser*	**Pressure Line**	**Reagent Line**
0.010 i.d. (black)	0.010 i.d. (black)	-
0.012 i.d. (blue)	0.012 i.d. (blue)	-
0.016 i.d. (green)	No choke	-
Variable choke	No choke or variable choke	4.75 in. lytic reagent restrictor or 7.5 in. lytic reagent restrictor

* Restrict the flow to increase timing, open the flow to decrease timing.

VCS Optimization Limits

Table A.1-17 LATRON™ Primer Background Limits

Service Specifications	Performance Specifications
≤100	≤200

Table A.1-18 LATRON™ Control Calibration and Verification Limits

	LATRON Control Results	Diff and Retic		Diff		Retic	
		DC (Volume)	RF (Conductivity)	LS	LS Avg 5	LS	LS Avg 5
Calibration Limits*	Mean	Assay ±0.5	Assay +0.0/-1.0	Assay ±4.0	Assay ±2.0	Assay ±8.0	Assay ±5.0
	CV %	≤4.5%	≤6.0%	≤4.5%		≤4.5%	
	Mean-Mode	±0.5	±0.6	±1.5		±3.0	
Verification Limits*	Mean	Assay ±1.0	Assay +0.5/-1.5	Assay ±4.0	Assay ±2.0	Assay ±8.0	Assay ±5.0
	CV %	≤5.0%	≤7.0%	≤5.0%		≤5.0%	
	Mean-Mode	±0.5	±0.6	±1.6		±3.2	

*** Note:** The limits you should use, calibration or verification, is based on why you are checking the results.

- If you are collecting this data following DC, RF, or LS gain adjustments; as part of VCS optimization; or as part of instrument installation; compare the results to the tighter, **calibration** limits.
- If you are collecting this data for any other reason, compare the results to the **verification** limits. If you have trouble meeting this specification, refer to Heading 7.4, DC, RF, OR LS LATEX CALIBRATION PROBLEMS.

Table A.1-19 LS Offset Voltage

Test Point Reference	Diff Mode Specifications	Retic Mode Specifications
LS Preamp 5 TP1-TP3	<2.0 V	<1.1 V

Table A.1-20 Noise Checks - Diff and Retic

	Diff Mode Specifications		Retic Mode Specifications	
RMS Noise TP	Static	Dynamic	Static	Dynamic
V	≤7.5 mV	≤12 mV	≤7.5 mV	≤12 mV
C	≤50 mV	≤50 mV	≤50 mV	≤50 mV
S	≤10 mV	≤12 mV	≤18 mV	≤20 mV

Voltages

Table A.1-21 Hgb Blank Voltage

Voltage Reading	Service Limits	Performance Specifications
Hgb blank	6.70 - 7.30 Vdc	6.65 - 7.35 Vdc

Sample Handler Cards

Table A.1-22 Blood/Bubble Detectors Tolerances

Voltage	TP	Adjustment	Limits
Front Detector Cable Reading	5 (negative) and 23 (positive)	R64	±2 mV
Rear Detector Cable Reading	5 (negative) and 19 (positive)	R77	±2 mV
Front and Rear Recovery	19 and 23	**Run Samples** function	±5 mV

System

Table A.1-23 System Voltage Ranges

Voltage	Service Limits*	Performance Specifications	J120 TP	Source	Adjustment	Fuse†
+5 Vdc	4.80 to 5.20 Vdc	4.75 to 5.25 Vdc	1	PS3	R10	F4
+5.6 Vdc	5.30 to 5.75 Vdc	5.32 to 5.88 Vdc	2	PS7	R7	F3
+15 Vdc	14.40 to 15.60 Vdc	14.25 to 15.75 Vdc	3	PS3	R27	F4
-15 Vdc	-14.40 to 15.60 Vdc	-14.25 to 15.75 Vdc	4	PS3	R31	F4
ac input	N/A	N/A	N/A	N/A	N/A	F1 and F2
+24 Vdc	23.04 to 24.96 Vdc	22.8 to 25.2 Vdc	6	PS4	R11	F5
+12 Vdc	11.52 to 12.48 Vdc	11.4 to 12.6 Vdc	7	PS6	R11	F6
+6.3 Vdc	6.05 to 6.55 Vdc	5.98 to 6.62 Vdc	8	RF Power Supply	R1	F5
Ground	N/A	N/A	9	N/A	N/A	N/A
+240 Vdc	230 to 263 Vdc	228 to 265 Vdc	N/A	Aperture Voltage/Power Fail Detect card	N/A	N/A
+1350 Vdc	1196 to 1513 Vdc	1186 to 1523 Vdc	N/A	Laser Power Supply	N/A	F9
+300 Vdc**	288 to 312 Vdc	285 to 315 Vdc	N/A	RF Power Supply	R2	F8

* Value obtained using System Test.
† For fuse ratings, refer to Table A.3-2, Fuse Ratings and Functions.
** +300 Vdc must be turned ON to measure.

Volumes

Aspiration Pump, Primary Mode

Table A.1-24 Aspiration Pump Volume Tolerances

Control Used	X* Distance Tolerance	Replicate Tolerance
Enhanced 5C Normal cell control†	13 mm ±3 mm (0.5 in. ±0.125 in.)	±7 mm (±0.25 in.)
4C PLUS Abnormal High cell control	25 mm ±3 mm (1 in. ±0.125 in.)	±7 mm (±0.25 in.)

* Measurement taken between the trailing edge of the sample and the end of the fitting on BD1-2 on the second pull.
† Has a high Hgb value.

Diluent Dispensers

Table A.1-25 Diluent Dispenser Volume Specifications and Tolerances

		Tolerances*	
Diluent Dispensers	Specifications	Measured by Volume	Measured by Weight
RBC diluent dispenser (10 mL)	10 mL ±0.05 mL	100 mL ±1.0 mL	10 g ±0.05 g
WBC diluent dispenser (6 mL)	6 mL ±0.03 mL	60 mL ±1.0 mL	6 g ±0.03 g

* Based on dispensing 10 times.

CBC Lytic Reagent Pumps' Volume Tolerance

The total volume of CBC lytic reagent obtained by dispensing reagent 12 times must weigh between 12.48 g and 12.96 g.

A.2 CIRCUIT CARDS - JUMPERS AND TEST POINTS

376 CPU Card

Figure A.2-1 376 CPU Card Jumper Locations

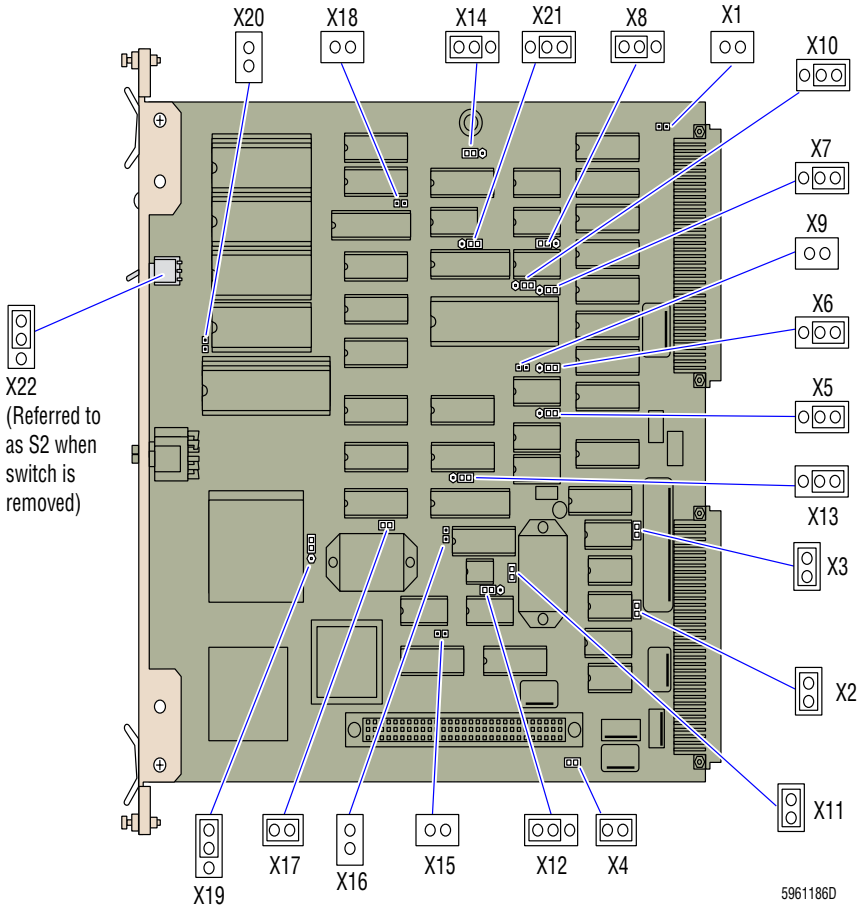

Jumper Settings

Table A.2-1 376 CPU Card Jumper Settings (See Figure A.2-1)

Jumper	Setting	Jumper	Setting	Jumper	Setting
X1	No jumper	X8	Pins 2 and 3 left side	X15	No jumper
X2	Jumper installed*	X9	No jumper	X16	No jumper
X3	Jumper installed*	X10	Pins 2 and 3 right side	X17	Jumper installed
X4	Jumper installed*	X11	Jumper installed	X18	No jumper
X5	Pins 1 and 3 right side	X12	Pins 1 and 3 left side	X19	Pins 2 and 3 right side
X6	Pins 1 and 3 right side	X13	Pins 2 and 3 right side	X20	No jumper
X7	Pins 1 and 3 right side	X14	Pins 2 and 3 left side	X21	Pins 1 and 3 right side
				X22†	Pins 1 and 3 right side

* Installing jumpers X2, X3 and X4 enables the on-board battery circuits.
† Referred to as S2 when switch is removed. When switch is present, there is nothing to jumper at X22.

Autoloader Interface Card

Figure A.2-2 Autoloader Interface Component Locations

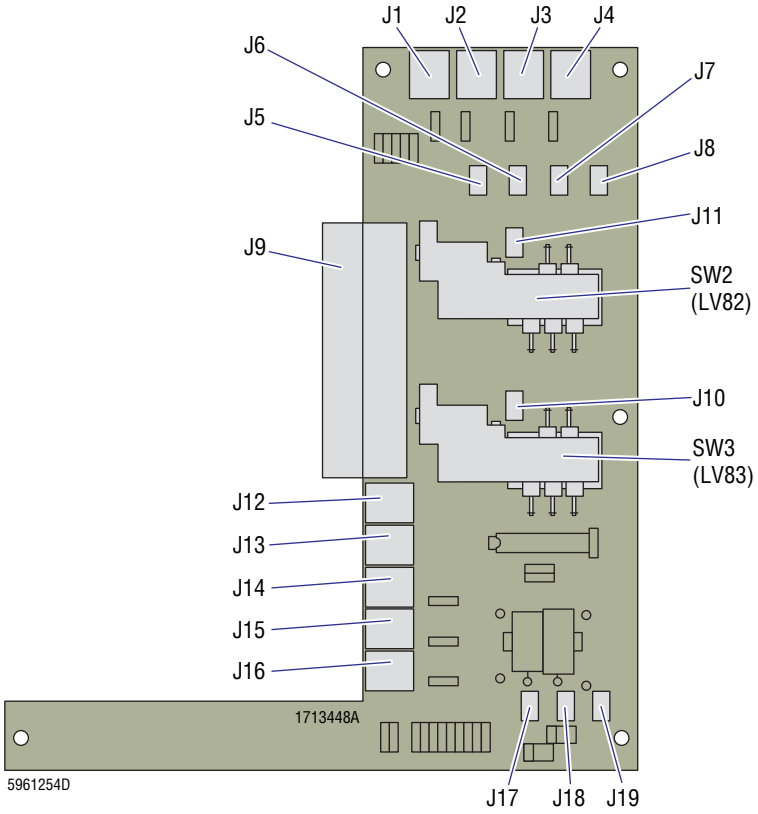

Connectors

Table A.2-2 Autoloader Interface Card Connectors (See Figure A.2-2)

J No.	Connects to:	J No.	Connects to:
J1	Not used	J11	LV82, pierce needle solenoid
J2	S15, load stack empty sensor	J12	S16, (rocker bed) pierce position sensor
J3	S10, tube-ram sensor	J13	S17, (rocker bed) horizontal position sensor
J4	S11, unload stack full sensor	J14	S0, needle home sensor
J5	LV81, tube-return solenoid	J15	S1, needle forward sensor
J6	LV84, bed-lock solenoid	J16	S14, tube forward sensor
J7	Not used	J17	S4, **STOP** switch
J8	Not used	J18	S5, door interlock switch
J9	Sample Handler card, J15 **Note**: P16 connects to J9, P15 to J15.	J19	M1, rocker bed motor
J10	LV83, tube ram solenoid		

DILUTER INTERFACE Card

Figure A.2-3 DILUTER INTERFACE Card Component Locations

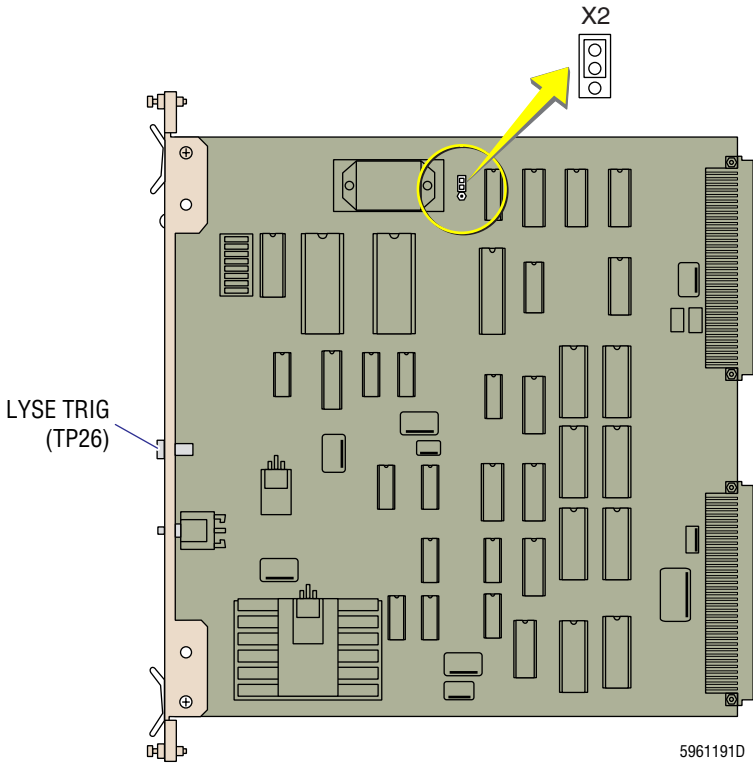

Jumper Setting

X2 - Jumper pins 2 and 3, left side (See Figure A.2-3).

Test Point

TP26, LYSE TRIG (See Figure A.2-3) - used when performing diluent and lytic reagent timing

Fluid Detector/Ram Pressure Card

Figure A.2-4 Fluid Detector/Ram Pressure Card Component Locations

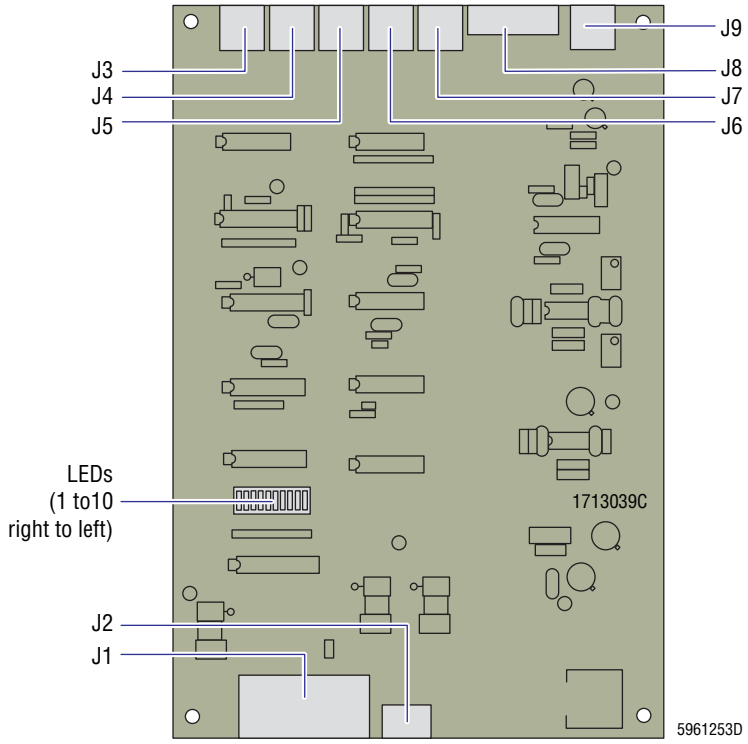

Connectors

Table A.2-3 Fluid Detector/Ram Pressure Card Connectors (See Figure A.2-4)

J No.	Connects to:	J No.	Connects to:
J1	P7, signal cable to analog backplane, TB1 and TB3	J6	P86, diluent optical sensor, FD6
J2	P91, signals from Solenoid Junction card for LV10, LV11, LV12 and LV13 (the prime sensor solenoids)	J7	P87, cleaning agent optical sensor, FD7
J3	P83, CBC lytic reagent optical sensor, FD3	J8	P92, signals to LV10, LV11, LV12 and LV13 (the prime sensor solenoids)
J4	P84, Erythrolyse II optical sensor, FD4	J9	Not used.
J5	P85, StabiLyse optical sensor, FD5		

LEDs

Table A.2-4 Fluid Detector/Ram Pressure Card LED Positions (See Figure A.2-4)

LED	Light goes out when:	LED	Light goes out when:	LED	Light goes out when:
1	RBC bath overflows.	5	StabiLyse is empty.	8	Spare
2	WBC bath overflows.	6	Diluent is empty.	9	Spare
3	CBC lytic reagent is empty.	7	Cleaning agent is empty.	10	Not used.
4	Erythrolyse II is empty.				

I/O Card

Figure A.2-5 I/O Card Jumper Locations

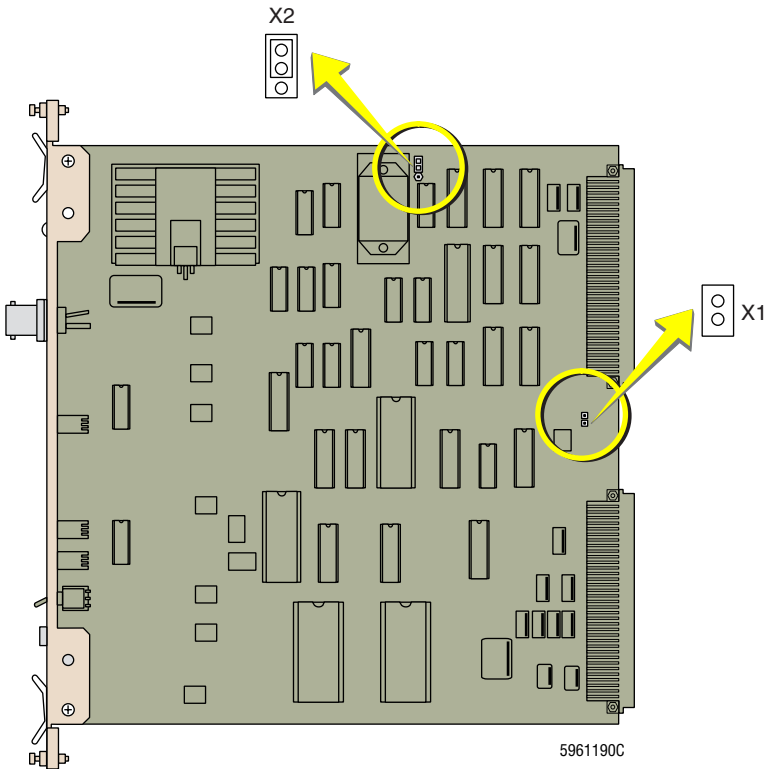

Jumper Settings

X1 - No jumper (See Figure A.2-5)

X2 - Jumper pins 2 and 3, left side (See Figure A.2-5).

Peltier Controller Card

Figure A.2-6 Peltier Controller Card Connector and LED Locations

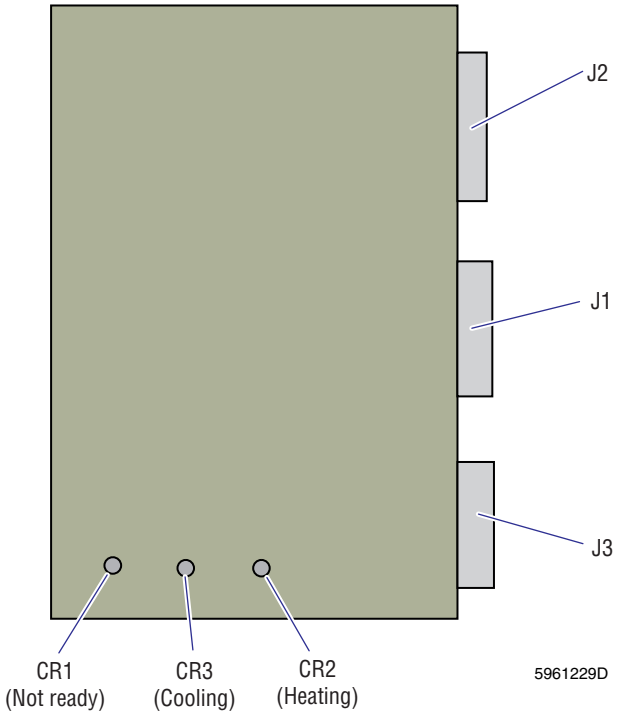

Connectors and LEDs

Table A.2-5 Peltier Controller Card Connectors and LEDs (See Figure A.2-6)

Connectors		LEDs	
J No.	**Function**	**CR No.**	**Function**
J1	P5, power from the Electronic Power Supply via the terminal board. • Pin 1 = ground • Pin 2 = +24 Vdc • Pin 3 = +12 Vdc	CR1	Not ready, stabilizing
J2	P4, 16-pin signal cable from analog backplane	CR2	Heating
J3	P3, cooling fan	CR3	Cooling

Pneumatic Monitor Card

Figure A.2-7 Pneumatic Monitor Card Component Locations

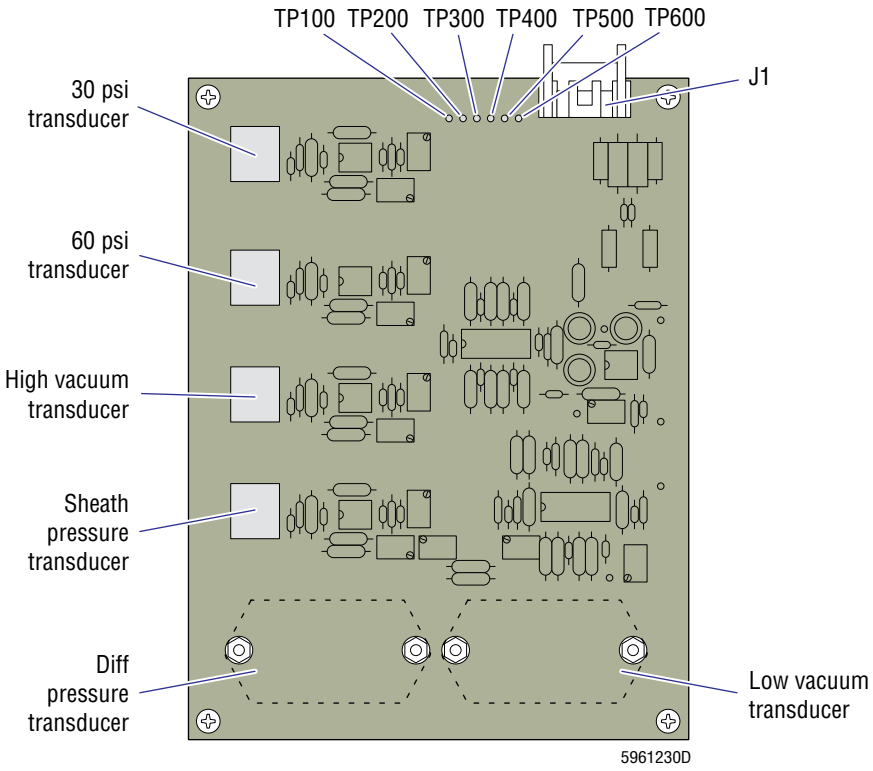

Connector

J1 connects to P1 from the analog backplane, TB1 and TB3

Test Points

Table A.2-6 Pneumatic Monitor Card Pneumatic Reading to Vdc Conversion (See Figure A.2-7)

TP100 - 30 psi		TP200 - 60 psi		TP300 - Hi Vac		TP400 - Sheath		TP500 - Lo Vac		TP600 - Diff	
psi	Vdc	psi	Vdc	in. Hg	Vdc	psi	Vdc	in. Hg	Vdc	psi	Vdc
0	0	0	0	0	0	0	0	5	0	0	0
1	0.286	2	2.286	1	0.333	1	0.714	5.25	1.25	0.1	0.667
2	0.571	4	0.571	2	0.666	2	1.429	5.50	2.50	0.2	1.333
3	0.857	6	0.857	3	0.999	3	2.143	5.75	3.75	0.3	2.000
4	1.143	8	1.142	4	1.332	4	2.857	6.00	5.00	0.4	2.666
5	1.429	10	1.428	5	1.665	5	3.572	6.25	6.25	0.5	3.333
6	1.714	12	1.714	6	1.998	6	4.286	6.50	7.50	0.6	3.999
7	2.000	14	1.999	7	2.331	7	5.000	6.75	8.75	0.7	4.666
8	2.286	16	2.285	8	2.664	8	5.715	7.00	10.00	0.8	5.333
9	2.571	18	2.570	9	2.997	9	6.429			0.9	5.999
10	2.857	20	2.856	10	3.330	10	7.143			1.0	6.666
11	3.143	22	3.142	11	3.663	11	7.857			1.1	7.332
12	3.428	24	3.427	12	3.996	12	8.572			1.2	7.999
13	3.714	26	3.713	13	4.329	13	9.286			1.3	8.665
14	4.000	28	3.998	14	4.662	14	10.00			1.4	9.332
15	4.286	30	4.284	15	4.995					1.5	9.998
16	4.571	32	4.570	16	5.328						
17	4.857	34	4.855	17	5.661						
18	5.143	36	5.141	18	5.994						
19	5.428	38	5.426	19	6.327						
20	5.714	40	5.712	20	6.660						
21	6.000	42	5.998	21	6.993						
22	6.285	44	6.283	22	7.326						
23	6.571	46	6.569	23	7.659						
24	6.857	48	6.854	24	7.992						
25	7.143	50	7.140	25	8.325						
26	7.428	52	7.425	26	8.685						
27	7.714	54	7.711	27	8.991						
28	8.000	56	7.997	28	9.324						
29	8.285	58	8.282	29	9.657						
30	8.571	60	8.568	30	9.990						
31	8.857	62	8.854								
32	9.142	64	9.139								
33	9.428	66	9.428								
34	9.714	68	9.710								
35	10.000	70	9.996								

RAM Timer Card

Figure A.2-8 RAM Timer Card Jumper Locations

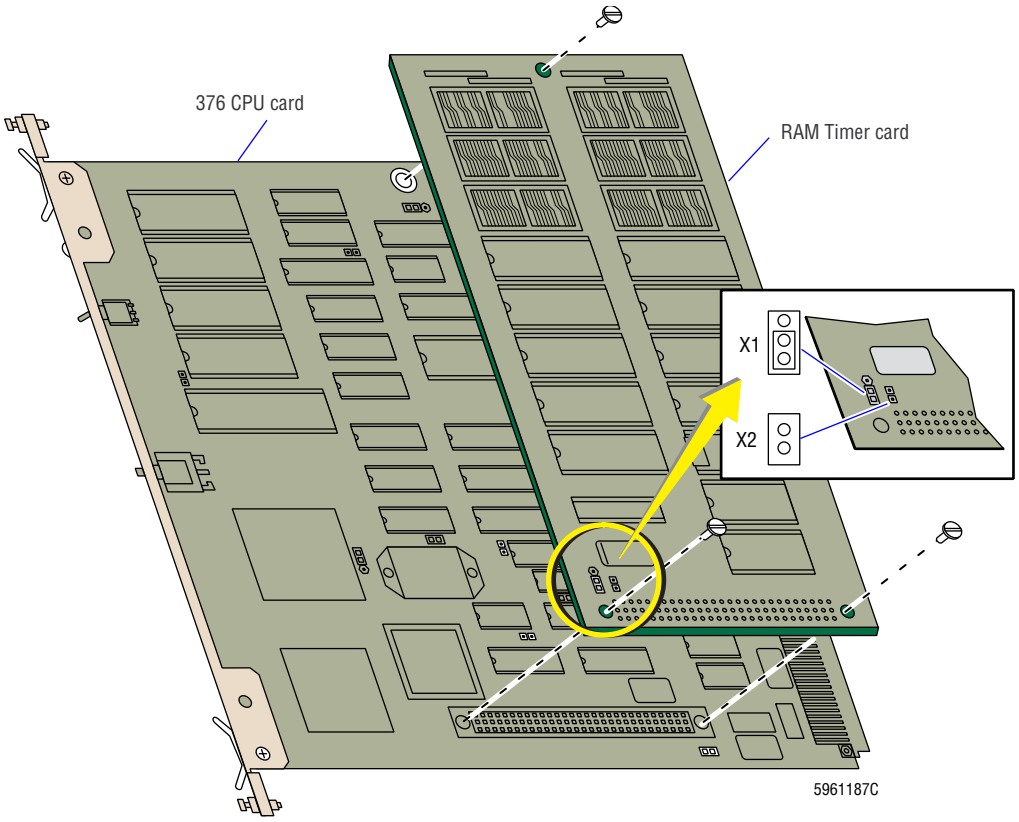

Jumper Settings

X1 - Jumper pins 1 and 3, left side (See Figure A.2-8)

X2 - No jumper (See Figure A.2-8)

Rocker Bed Interface Card

Figure A.2-9 Rocker Bed Interface Card Connector Locations

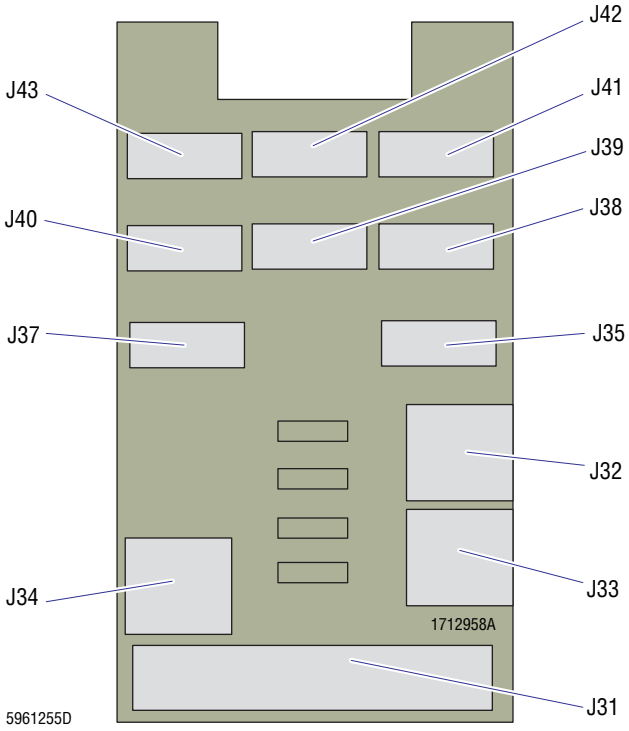

Connectors

Table A.2-7 Rocker Bed Interface Card Connectors (See Figure A.2-9)

J No.	Connects to:	J No.	Connects to:
J31	Autoloader Interface card, J17	J38	S12, cassette position 0, RED/ORN/BRN
J32	B2, unload elevator motor (left)	J39	S9, full cass index rotation, RED/GRN/WHT
J33	B1, load elevator motor (right)	J40	S3, cassette position 2, RED/ORN/BRN
J34	M2, cassette index motor	J41	S2, cassette position 1, RED/ORN/BRN
J35	S8, load elevator down (right), RED/GRN/WHT	J42	S7, tube in position, RED/YEL/WHT
J37	S6, unload elevator down (left), RED/GRN/WHT	J43	S13, cassette position 3, RED/ORN/BRN

R/W/P PROC Card

Figure A.2-10 R/W/P PROC Card Component Locations

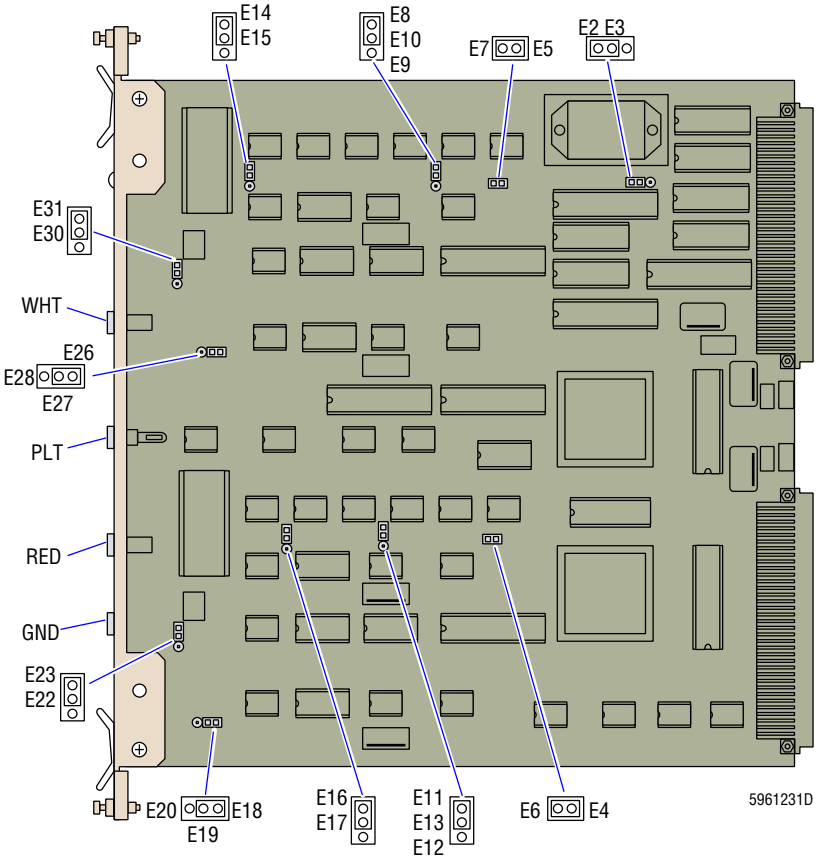

Jumper Settings

Table A.2-8 R/W/P PROC Card Jumper Settings (See Figure A.2-10)

Jumper pin…	To pin…	Jumper pin…	To pin…
E2	E3	E16	E17
E4	E6	E18	E19
E5	E7	E22	E23
E8	E10	E26	E27
E11	E13	E30	E31
E14	E15		

Test Points

Table A.2-9 R/W/P PROC Card Test Points (See Figure A.2-10)

TP	Ground	Function
WHT	GND	Allows measurement of noise on the WBC channel.
PLT	GND	Allows measurement of noise on the Plt channel.
RED	GND	Allows measurement of noise on the RBC channel.

Sample Handler Card

Figure A.2-11 Sample Handler Card Component Locations

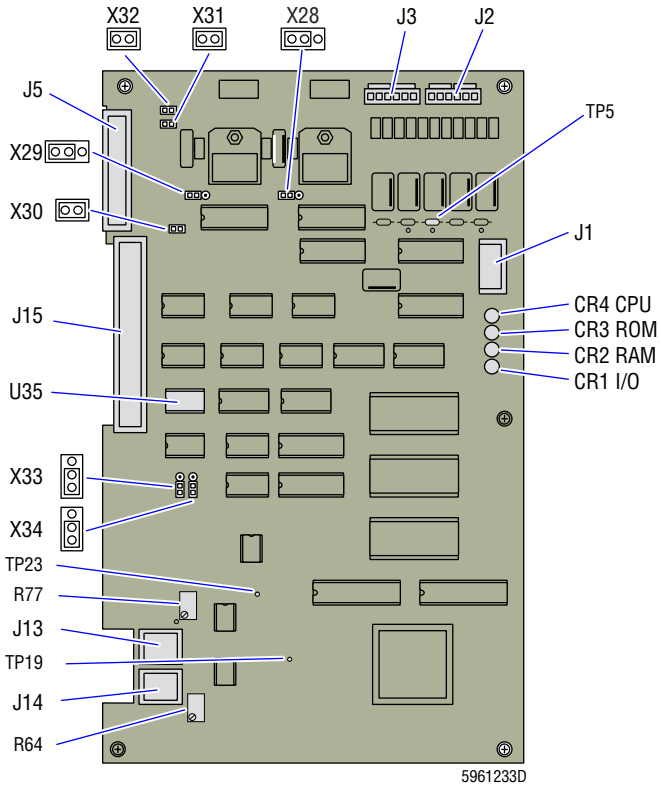

Blood/Bubble Detector Adjustments and Test Points

Front blood/bubble detector

- Voltage reading - TP23 (See Table A.1-22, for expected readings and limits.)
- Adjustment - R64

Rear blood/bubble detector

- Voltage reading - TP19 (See Table A.1-22, for expected readings and limits.)
- Adjustment - R77

Connectors

Table A.2-10 Sample Handler Card Connectors (See Figure A.2-11)

J No.	Connects to:	J No.	Connects to:
J1	P33, from P22 on the Solenoid Junction card	J13	P49, from front blood/bubble detector
J2	P2, from the Electronic Power Supply via TB1, TB2, TB3, TB4.	J14	P50 from rear blood/bubble detector
J3	P3, from the Electronic Power Supply via TB2, TB3, and TB4.	J15	P15, from P16/J9 on the Autoloader Interface card (HmX analyzer with Autoloader module)
J5	P43, from P44/P6 on the Bar-Code Decoder card		P15, from P16/J3 on the RCP II Junction card (HmX analyzer with Rotary Cap-Pierce module)

Jumper Settings

Table A.2-11 Sample Handler Card Jumper Settings (See Figure A.2-11)

Jumper	Setting	Jumper	Setting
X28	Jumper installed, left side	X32	Jumper installed
X29	Jumper installed, left side	X33	Jumper installed, left side
X30	Jumper installed	X34	Jumper installed, left side
X31	Jumper installed		

LEDs

Table A.2-12 Sample Handler Card LED Functions (See Figure A.2-11)

		LEDs			
Operation	**Condition**	**CPU**	**ROM**	**RAM**	**I/O**
System power up	Beginning of on-board tests	On	On	On	On
	CPU test passed self test	Off	On	On	On
	ROM passed self test	Off	Off	On	On
	RAM passed self test	Off	Off	Off	On
	I/O test passed self test	Off	Off	Off	Off
Software download	Waiting for download	Off	Off	Off	Flashes
	I/O receiving download from DMS and placing code in RAM	Off	Off	Flashes	Flashes
	Attempting to abort download	On	Off	Off	On
	Lower door opened during or after download	Flashes	Off	Off	Off
	After download, a sensor in the Rotary Cap-Pierce module is misaligned or defective. **Note**: The red LED near the tube entry port lights.	Off	Off	Off	Off
Carousel rotation (Rotary Cap-Pierce module only)	Carousel at HOME position.	On	Off	Off	Off
	Carousel between HOME and PIERCE positions.	Off	On	Off	Off
	Carousel at PIERCE position	Off	Off	On	Off
	Carousel between PIERCE and HOME positions.	Off	Off	Off	On

VCS PROCESSOR Card

Figure A.2-12 VCS PROCESSOR Card Component Locations

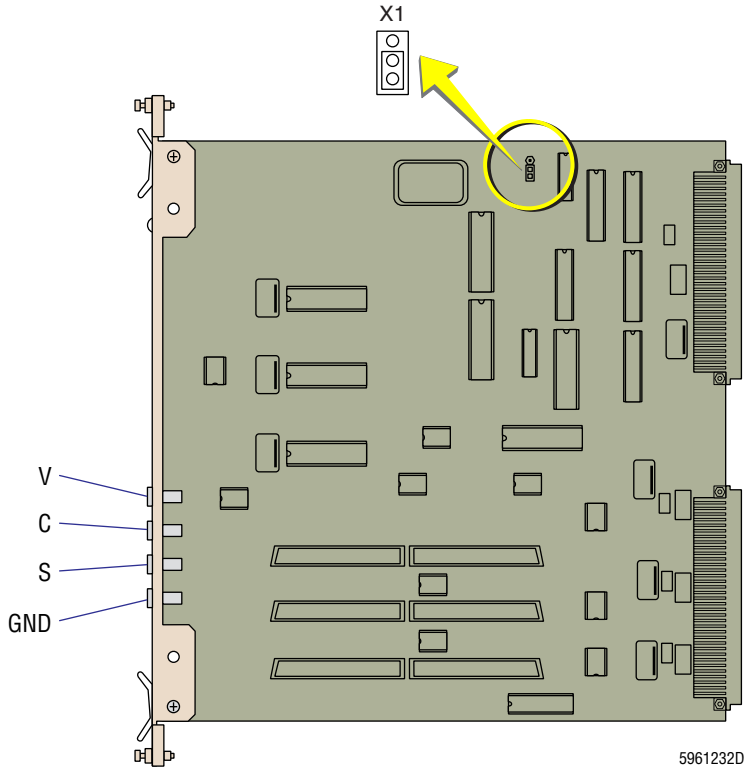

Jumper Setting

X1 - Jumper pins 2 and 3, bottom (See Figure A.2-12)

Test Points

Table A.2-13 VCS PROCESSOR Card Test Points (See Figure A.2-12**)**

TP	Ground	Function
V	GND	Allows measurement of noise on the volume (DC) channel.
C	GND	Allows measurement of noise on the conductivity (RF) channel.
S	GND	Allows measurement of noise on the light scatter (LS) channel.

A.3 POWER SUPPLIES - SWITCH SETTINGS; FUSE RATINGS; AND CONNECTIONS, JUMPERS, AND TEST POINTS

Power Switch Settings

Table A.3-1 Input Power Switch Settings

Switch Setting	Input Voltage	Frequency
120 Vac	90 -132 Vac	48 - 62 Hz
220 Vac	198 - 242 Vac	48 - 62 Hz

Fuse Ratings and Functions

Table A.3-2 Fuse Ratings and Functions

Fuse	Fuse Rating - 220/240 Vac	Fuse Rating - 100/120 Vac	Function
1	3.2 A	6.25 A	Main power
2	3.2 A	6.25 A	Main power
3	1/4 A	1/2 A	PS7 (5.6 V supply)
4	2 A	4 A	PS3 (+5, +15, -15 V supply)
5	1 A	2 A	PS4 (24 V supply)
6	1 A	2 A	PS6 (12 V supply)
7	1/16 A	1/8 A	Transformer T4 (240 Vdc)
8	1/8 A	1/4 A	Transformer T3 (300 Vdc)
9	0.3 A SLO BLO	0.4 A SLO BLO	Laser Power Supply
10	1.5 A SLO BLO	2.5 A SLO BLO	Pneumatic Power Supply

Electronic Power Supply

Jumpers and Connections

Table A.3-3 Electronic Power Supply Terminal Card Jumpers and Connections

Voltage	Terminal Cards	Jumpers	Wire Connections
96 to 106 Vac (120/220 selection switch to 120)	TB2, TB3, TB4, TB5	1 to 2 3 to 4	TB pos 1 - Brown TB pos 5 - Blue
	TB6, TB7 under rear cover)	1 to 2 5 to 6	TB pos 1 - Brown TB pos 5 - Blue
107 to 132 Vac (120/220 selection switch to 120)	TB2, TB3, TB4, TB5	1 to 2 3 to 4	TB pos 1 - Brown TB pos 4 - Blue
	TB6, TB7 (under rear cover)	1 to 2 3 to 4	TB pos 1 - Brown TB pos 4 - Blue
198 to 219 Vac (120/220 selection switch to 220)	TB2, TB3, TB4, TB5	2 to 3	TB pos 1 - Brown TB pos 5 - Blue
	TB6, TB7 (under rear cover)	2 to 3	TB pos 1 - Brown TB pos 5 - Blue
220 to 264 Vac (120/220 selection switch to 220)	TB2, TB3, TB4, TB5	2 to 3	TB pos 1 - Brown TB pos 4 - Blue
	TB6, TB7 (under rear cover)	2 to 3	TB pos 1 - Brown TB pos 4 - Blue

Test Points and Adjustments

Table A.3-4 Electronic Power Supply Test Points and Adjustments

Connector	Pins	Voltage	Adjustment
J105	1, 2, 3, 4	+5 Vdc	PS3, R10
	5, 6, 7, 8	+5 V Common	
	9, 10	+15 Vdc	PS3, R27
	11, 12	-15 Vdc	PS3, R31
	13, 14, 15	±15 V Common	
J107	1, 2, 3	+12 Vdc	PS6, R11
	4, 5, 6	+12 V Common	

Table A.3-4 Electronic Power Supply Test Points and Adjustments *(Continued)*

Connector	Pins	Voltage	Adjustment
J108	1, 2	+5.6 Vdc	PS7, R6
	3, 4	+5.6 V Common	
	5	Ready/Standby Switch Common	
	6	Ready/Standby Switch +5.6 Vdc (or Ov. with jumper)	
	7	Chassis Ground	
	8	Not connected	
	9	+6.3 Vdc Reference	
	10	To Ground Bus Bar	
	11	+240 V Common	
	12	+240 Vdc	
J112	1	RF ON signal	
	2	Compressor ON	
	3	300 Vdc Reference	
	4	ACLO (power fail signal)	
	5	Standby LED	
	6	Standby LED	
	7	Ready LED	
	8	Ready LED	
	9	Not connected	
J113/J114	1	Ac Line	
	2	Ac Neutral	
	3	Chassis Ground	
J115	1	+300 Vdc **Note**: Turn +300 Vdc ON to measure.	RF Power Supply, R2
	2	+300 V Common	
	3	+6.3 Vdc	RF Power Supply, R1
	4	+6.3 V Common	
J116	1, 2	K3 (+24 Vdc)	
	3, 4, 5	+24 Vdc	PS4, R11
	6, 7, 8, 9, 10	+24 V Common	
	11, 12	Not connected	
J119 (spare)	1	+15 Vdc	PS3, R27
	2	-15 Vdc	PS3, R31
	3	±15 Vdc Common	
J120	Refer to Table A.1-23, System Voltage Ranges.		

Laser Power Supply

Jumpers and Connections

Table A.3-5 Laser Power Supply Buck-Boost Transformer Jumpers and Connections

Voltage	Jumpers	Wire Connections
90 to 106 Vac	None	TB pos 4 - White/Brown TB pos 1 - Brown
107 to 119 Vac (Buck-Boost not required)	None	TB pos 4 - Brown TB pos 4 - White/Brown
120 to 132 Vac	None	TB pos 3 - White/Brown TB pos 4 - Brown
198 to 219 Vac	1 to 2 3 to 4	TB pos 4 - White/Brown TB pos 1 - Brown
220 to 232 Vac (Buck-Boost not required)	1 to 2 3 to 4	TB pos 3 - Brown TB pos 4 - White/Brown
233 to 264 Vac	1 to 2 3 to 4	TB pos 1 - White/Brown TB pos 4 - Brown

Pneumatic Power Supply

Jumpers and Connections

Table A.3-6 Pneumatic Power Supply Buck-Boost Transformer Terminal Card Jumpers and Connections

Voltage	Jumpers	Wire Connections
90 to 106 Vac	None	TB pos 1 and 5 - Black (fan) TB pos 1 - Black (compressor) TB pos 4 - White/Brown
107 to 119 Vac (Buck-Boost not required)	None	TB pos 4 and 5 - Black (fan) TB pos 4 - Black (compressor) TB pos 4 - White/Brown
120 to 132 Vac	None	TB pos 4 and 5 - Black (fan) TB pos 4 - Black (compressor) TB pos 3 - White/Brown
198 to 219 Vac	1 to 2 3 to 4	TB pos 1 and 5 - Black (fan) TB pos 1 - Black (compressor) TB pos 4 - White/Brown
220 to 232 Vac (Buck-Boost not required)	1 to 2 3 to 4	TB pos 4 and 5 - Black (fan) TB pos 4 - Black (compressor) TB pos 4 - White/Brown
233 to 264 Vac	1 to 2 3 to 4	TB pos 4 and 5 - Black (fan) TB pos 4 - Black (compressor) TB pos 1 - White/Brown

A.4 SOFTWARE SETTINGS

Bar-Code Reader Decoder Card

Table A.4-1 Bar-Code Reader Decoder Card Code Types Default Settings

Setting	CODE 39	CODABAR	I 2-of-5	UPC	CODE 128
Code Type	Enabled	Enabled	Enabled	Disabled	Enabled
Fixed Length	Disabled	Disabled	N/A	N/A	Disabled
Code Length #1	10.00	10	12	N/A	10
Code Length #2	N/A	N/A	0	N/A	N/A
Check Digit	Enabled	Enabled	Enabled	N/A	N/A
C/D Output	Disabled	Disabled	Disabled	N/A	N/A
C/D Aim*	N/A	Enabled	N/A	N/A	N/A
C/D Type*	N/A	AIM-16	N/A	N/A	N/A
Interchar Gap	Disabled	Disabled	N/A	N/A	N/A
S/S Match	N/A	Disabled	N/A	N/A	N/A
S/S Output	N/A	Disabled	N/A	N/A	N/A
EAN	N/A	N/A	N/A	Disabled	N/A
Narrow Margins†	Disabled	Disabled	Disabled	Disabled	Disabled

* Only one of these two setting titles is displayed. Use the default settings for the one displayed.
† If the customer is not using tube labels and the system cannot read the cassette label, change setting to enabled.

Table A.4-2 Bar-Code Reader Decoder Card Communications Default Settings

Host Protocol	Parameter	Host Port	Aux Port
Protocol = P-T-P W/XON XOFF	Baud Rate	1200	1200
Preamble = DISABLED = <NULL><NULL>	Parity	Odd	Odd
Postamble = ENABLED = <CR><LF>	Stop Bits	One	One
Address =	Data Bits	Eight	Eight
RES = <NULL>	RS-422	Disabled	Disabled
REQ = <NULL>	Aux Mode	N/A	Full Duplex
EOT = <NULL>			
STX = <NULL>			
ETX = <NULL>			
ACK = <NULL>			
NAK = <NULL>			
LRC = Enabled			
Response Timeout = 12 ms			
Intechar Delay = 0 ms			

Table A.4-3 Bar-Code Reader Decoder Card Operations Default Settings

	Setting	
Operation	**Rotary Cap-Pierce Module**	**Autoloader Module**
Triggering Mode =	Serial	Serial
End of Read Cycle =	Timeout	Timeout
Timeout in 10 ms incs =	1000 ms	1500 ms
Triggering Character =	<GS >	<GS >
External Trigger =	N/A	N/A
Noread Message =	Noread	Noread
Noread Message =	Enabled	Enabled
Barcode Output =	Enabled	Enabled
When to Output =	As soon as possible	As soon as possible
Good Decode Reads =	7	4
Match Code =	Disabled	Disabled
Number of Labels =	One	Two

Table A.4-4 Bar-Code Reader Decoder Card User Outputs Default Settings

	Setting	
User Output	**Rotary Cap-Pierce Module**	**Autoloader Module**
Beeper =	On Good	Disabled
Beeper Volume =	Level 4	Level 4
Full Screens =	Enabled	Enabled
Relay Driver =	Mismatch or Noread	Mismatch or Noread
New Master Pin =	Disabled	Disabled
Good/Bad Polarity =	Positive	Positive
Good/Bad Pulse Width=	50 ms	50 ms
Gain Control =	0	0

A.5 DILUTER COMPONENT LOCATIONS AND FUNCTIONS

Most of the Diluter functions are accomplished by fluidic components that are interconnected by tubing and controlled by timed solenoid signals.

- Table A.5-1 lists the main fluidic components in the Diluter in alphabetic order by reference designator.
- Figures A.5-1 through A.5-9 show the locations of the fluidic components in the BSV, CBC, Main Diluter, Mixing Chamber, and Pump modules.

The components in the Flow-Cell module are discussed and illustrated under Heading 2.13, SAMPLE ANALYSIS SYSTEM - VCS TECHNOLOGY.

To locate a specific component in the Diluter, refer to the Location Reference column in Table A.5-1.

Table A.5-1 Diluter Component Location References and Functions

Reference Designator	Name	Location Reference	Functions
	Ambient temperature sensor	Figure A.5-1	Provides the ambient temperature input for the Peltier module.
	Aspirator tip	Figure A.5-1	Input pathway for sample aspiration in the Secondary mode.
	Bleach probe	Figure A.5-1	Input pathway for the bleach solution in the Disinfect cycle.
	BSV actuator	Figure A.5-1	Rotates the left and center sections of the BSV.
	Fluid Detector/Ram Pressure card	Figure A.5-6	Monitors the fluid detector sensors FD1 through FD7. See Fluid Detector/Ram Pressure Card under Heading 2.6, REAGENT SYSTEM.
	Hgb lamp	Figure A.5-3	Light source for photometric measurement of Hgb.
	Hgb Preamp module	Figure A.5-3	Filters the light transmitted through the WBC bath, measures the light as current, amplifies the signal, and converts it to voltage. See Determining the Hgb under Heading 2.12, SAMPLE ANALYSIS SYSTEM - CBC TECHNOLOGY.
	Laser	Figure 2.13-1	Coherent light source for light scatter measurement.
	Lens block	Figure 2.13-1	Focuses the laser light on the aperture in the flow cell.
	LS Preamp module	Figure 2.13-1	Receives and amplifies pulses from the LS sensor.
	LS sensor	Figure 2.13-1	Detects the light scattered as the WBCs pass through the aperture in the flow cell.
	Peltier Controller card	Figure A.5-2	Controls the heating and cooling of the Peltier cells.
	Pneumatic Monitor card	Figure A.5-6	Monitors the system vacuums and pressures. See Pneumatic Monitor Card under Heading 2.5, PNEUMATIC SYSTEM.
	RF Detector Preamp card	Figure 2.13-1	Generates the RF and DC current applied to the flow cell, detects RF voltage (to monitor for clogs in the flow cell), and amplifies the RF and DC pulses from the flow cell. See RF Detector Preamp Card under Heading 2.13, SAMPLE ANALYSIS SYSTEM - VCS TECHNOLOGY.

Table A.5-1 Diluter Component Location References and Functions *(Continued)*

Reference Designator	Name	Location Reference	Functions
BD1	Blood/bubble detector (front)	Figure A.5-1	One of a pair of blood/bubble detectors that monitor the fluid in the aspiration line in the Primary mode. See Blood/Bubble Detectors under Heading 2.11, SAMPLE PROCESSING SYSTEM - DILUTER.
BD2	Blood/bubble detector (rear)	Figure A.5-1	One of a pair of blood/bubble detectors that monitor the fluid in the aspiration line in the Primary mode. See Blood/Bubble Detectors under Heading 2.11, SAMPLE PROCESSING SYSTEM - DILUTER.
BSV1	Blood sampling valve	Figure A.5-1	Isolates blood for the RBC/Plt and WBC/Hgb dilutions, and routes the blood samples, diluent and rinse to the RBC and WBC baths, BT1 and BT2. See Blood Sampling Valve (BSV) under Heading 2.11, SAMPLE PROCESSING SYSTEM - DILUTER
BT1	WBC bath	Figure A.5-3	Holds WBC dilution for mixing and for collection of WBC and Hgb data.
BT2	RBC bath	Figure A.5-3	Holds RBC dilution for mixing and for collection of RBC and Plt data.
CL3	CL3	Figure A.5-2	Moves the rinse block.
FC1	Flow cell	Figure 2.13-1	Houses and provides path to VCS aperture.
FD1	RBC bath overflow detector	Figure A.5-4	Monitors the overflow line from the RBC bath for liquid.
FD2	WBC bath overflow detector	Figure A.5-4	Monitors the overflow line from the WBC bath for liquid.
FD3	Erythrolyse (PAK LYSE) reagent sensor	Figure A.5-6	Monitors the Erythrolyse II reagent supply.
FD4	StabiLyse (PAK PRESERVE) reagent sensor	Figure A.5-6	Monitors the StabiLyse reagent supply.
FD5	CBC lyse sensor	Figure A.5-6	Monitors the CBC lytic reagent supply.
FD6	Diluent sensor	Figure A.5-6	Monitors the diluent reagent supply.
FD7	Cleaning agent sensor	Figure A.5-6	Monitors the cleaning agent supply.
FL1	Vacuum trap	Figure A.5-6	Traps any liquid in the vacuum lines, preventing the liquid from traveling back to the pump in the Pneumatic Power Supply.
FL2	Water trap (air/water separator)	Figure A.5-6	Collects condensation from the pressurized air.
FMT1	Foam trap (vent waste chamber)	Figure A.5-9	Collects any foam or liquid overflow from the vent waste chamber, VC3.
FMT2	Foam trap (diff waste chamber)	Figure A.5-6	Collects any foam or liquid overflow from the diff waste chamber, VC7.

Table A.5-1 Diluter Component Location References and Functions *(Continued)*

Reference Designator	Name	Location Reference	Functions
FMT3	Foam trap (waste chamber)	Figure A.5-4	Collects any foam or liquid overflow from the waste chamber, VC1.
FMT4	Foam trap	Figure A.5-1	Acts as a buffer to prevent interaction between the aspiration pumps' exhaust lines venting to atmosphere.
LV1 - LV8		Figure A.5-4	For function, see Table 4.26-1, Solenoid Operations
LV10 - LV13		Figure A.5-6	For function, see Table 4.26-1, Solenoid Operations.
LV14, LV15		Figure A.5-2	For function, see Table 4.26-1, Solenoid Operations.
LV16 -LV19		Figure A.5-1	For function, see Table 4.26-1, Solenoid Operations.
LV20 - LV22		Figure A.5-2	For function, see Table 4.26-1, Solenoid Operations.
LV25 - LV30		Figure A.5-9	For function, see Table 4.26-1, Solenoid Operations.
LV31 -LV34		Figure A.5-8	For function, see Table 4.26-1, Solenoid Operations.
LV35 - LV42		Figure A.5-6	For function, see Table 4.26-1, Solenoid Operations.
LV43		Figure A.5-6	For function, see Table 4.26-1, Solenoid Operations.
LV43	Purge solenoid	Figure A.5-6	For function, see Table 4.26-1, Solenoid Operations.
LV44 - LV52		Figure A.5-6	For function, see Table 4.26-1, Solenoid Operations.
LV53		Figure A.5-2	For function, see Table 4.26-1, Solenoid Operations.
LV54 - LV59		Figure A.5-8	For function, see Table 4.26-1, Solenoid Operations.
LV67		Figure A.5-6	For function, see Table 4.26-1, Solenoid Operations.
LV68		Figure A.5-6	For function, see Table 4.26-1, Solenoid Operations.
MC1	Mixing chamber, diff	Figure A.5-7	Chamber for mixing and incubating blood and reagents for diff analysis.
MF1		Figure A.5-4	Contains solenoids LV1 through LV6 on the CBC module.
MF3		Figure A.5-2	Contains solenoids, LV14, LV15, LV 20 through 22 and LV53 on the BSV module.
MF5		Figure A.5-9	Contains solenoids LV25 through LV30 on the Pump module.
MF6		Figure A.5-9	Distributes 30-psi pressure within the Pump module.
MF7		Figure A.5-9	Distributes vacuum within the Pump module.
MF8		Figure A.5-4	Contains solenoids LV7 and LV8 on the CBC module.
MF10		Figure A.5-6	Contains solenoids LV35 through LV52, LV57 and LV58 on the Main Diluter module.
MF11		Figure A.5-6	Distributes pressurized diluent in the Main Diluter module.
MF14		Figure A.5-6	Distributes 30-psi pressure within the Main Diluter module.

Table A.5-1 Diluter Component Location References and Functions *(Continued)*

Reference Designator	Name	Location Reference	Functions
MF15		Figure A.5-8	Contains solenoids LV31 through LV34 and LV54 through 59 in the Mixing module.
MF17		Figure A.5-6	Contains solenoids LV10 through LV13 in the Main Diluter module.
PLB1	Peltier module	Figure A.5-2	Heats or cools the mixing chamber rinse and the Erythrolyse II reagent. See Reagent Temperature Control under Heading 2.6, REAGENT SYSTEM.
PM1	CBC lytic reagent pumps	Figure A.5-3	One of a pair of reagent pumps that deliver CBC lytic reagent to WBC bath, BT1, to lyse RBCs and react with the hemoglobin.
PM2	CBC lytic reagent pumps	Figure A.5-3	One of a pair of reagent pumps that deliver CBC lytic reagent to WBC bath, BT1, to lyse RBCs and react with the hemoglobin.
PM3	Air pump	Figure A.5-1	In the Diff mode, pushes the sample for the Diff dilution out of the BSV and into the Erythrolyse II reagent input line to the mixing chamber, MC1.
PM4	Primary-mode aspiration pump	Figure A.5-1	Aspirates 185 µL of whole blood from the specimen tube via the needle assembly in the Primary mode.
PM5	Secondary-mode aspiration pump	Figure A.5-1	Aspirates 125 µL of whole blood from the specimen tube via the aspirator tip in the Secondary mode.
PM6	Erythrolyse II reagent pump	Figure A.5-9	One of a pair of reagent pumps that dispense Erythrolyse II reagent (diff lytic reagent) through the Peltier module to the mixing chamber, MC1.
PM7	Erythrolyse II reagent pump	Figure A.5-9	One of a pair of reagent pumps that dispense Erythrolyse II reagent (diff lytic reagent) through the Peltier module to the mixing chamber, MC1.
PM8	Backwash pump	Figure A.5-6	Provides 3 mL diluent or cleaning agent to rinse the aspiration pathways.
PM9	WBC diluent dispenser	Figure A.5-6	Dispenses 6.0 mL diluent to WBC bath, BT1, for the WBC dilution and to the RBC bath, BT2, to rinse the bath.
PM10	Cleaning agent pump	Figure A.5-6	Delivers 5 mL cleaning agent to the flow cell, FC1, during flow cell cleaning functions.
PM11	RBC diluent dispenser	Figure A.5-6	Dispenses 10 mL diluent to the RBC bath, BT2, for the RBC dilution and to the WBC bath, BT1, to rinse the bath.
PM12	StabiLyse reagent pump	Figure A.5-7	Dispenses StabiLyse reagent (diff preservative) to the mixing chamber, MC1.
PV1 - PV7		Figure A.5-3	
PV8		Figure A.5-4	
PV10 - PV15		Figure A.5-1	
PV20 - PV22		Figure A.5-9	
PV23		Figure A.5-1	

Table A.5-1 Diluter Component Location References and Functions *(Continued)*

Reference Designator	Name	Location Reference	Functions
PV24		Figure A.5-9	
PV25		Figure A.5-1	
PV26 - PV28		Figure A.5-9	
PV30 - PV48		Figure A.5-5	
PV49		Figure A.5-6	
PV50 - PV60		Figure A.5-7	
PV61 - PV65		Figure A.5-6	
PV66		Figure A.5-3	
PV68, PV69		Figure A.5-3	
PV70		Figure A.5-9	
RB1	Rinse block	Figure A.5-1	Cleans the outside of the aspirator tip in the Secondary mode.
RG1	Vacuum (low) regulator	Figure A.5-6	Regulates the low (6 in. Hg) vacuum used to pull the dilutions through the RBC and WBC apertures.
RG2	30 psi regulator	Figure A.5-6	Regulates high pressure to 30 psi.
RG3	Sheath-pressure regulator	Figure A.5-6	Regulates pressure for sheath fluid.
RG4	Sample-pressure regulator	Figure A.5-6	Regulates pressure for diff sample flow through the flow cell.
SF1	Sweep-flow tank	Figure A.5-3	Supplies the diluent that flows behind the RBC aperture to sweep cells away as they exit the aperture, preventing the cells from swirling back into the sensing area.
ST1	Sheath tank	Figure A.5-1	Provides pressurized diluent for sheath flow through flow cell.
VC1	Waste chamber	Figure A.5-3	Collects the waste from the RBC and WBC baths (BT2 and BT1) and the RBC and WBC vacuum isolator chambers (VC10 and VC11).
VC2	Bubble trap	Figure A.5-4	Traps bubbles and distributes diluent to the sweep-flow lines
VC3	Vent waste chamber	Figure A.5-9	Collects waste from the needle vent chamber.
VC4	Needle vent chamber	Figure A.5-9	Collects any blood aspirated into the needle vent line and the diluent or cleaning agent used to clean the needle.
VC5	Bleach chamber	Figure A.5-6	Provides vacuum to draw in bleach solution during a Disinfect cycle and provides a path for venting vacuum from the system when the compressor turns off.
VC6	Vacuum chamber	Figure A.5-6	Distributes vacuum in the Diluter.
VC7	Diff waste chamber	Figure A.5-6	Collects waste from the mixing chamber, MC1, and the flow cell, FC1.

Table A.5-1 Diluter Component Location References and Functions *(Continued)*

Reference Designator	Name	Location Reference	Functions
VC8	Overflow chamber	Figure A.5-3	Collects any liquid that overflows from the RBC or WBC baths, BT2 or BT1.
VC9	Vacuum tank	Figure 2.5-2	Stabilizes the vacuum supply used by the aspiration pumps.
VC10	RBC vacuum isolator chamber	Figure A.5-3	Distributes low vacuum (6 in. Hg) to pull dilution through the RBC aperture and sweep-flow diluent behind the RBC bath, BT2.
VC11	WBC vacuum isolator chamber	Figure A.5-3	Distributes low vacuum (6 in. Hg) to pull dilution through the WBC aperture.

Figure A.5-1 BSV Module, Front View

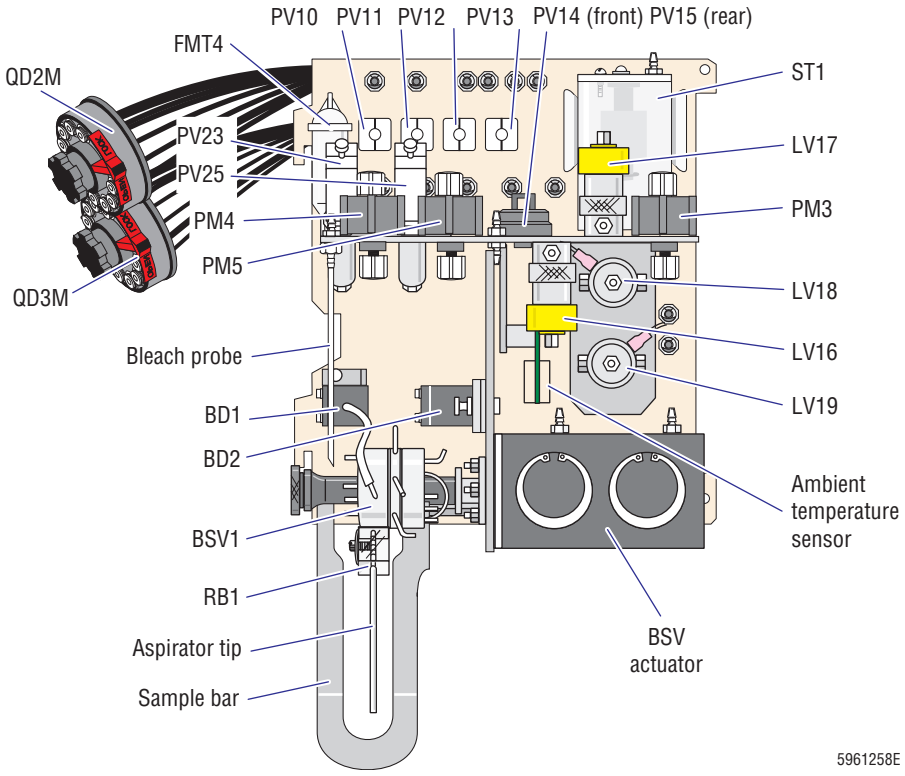

Figure A.5-2 BSV Module, Rear View

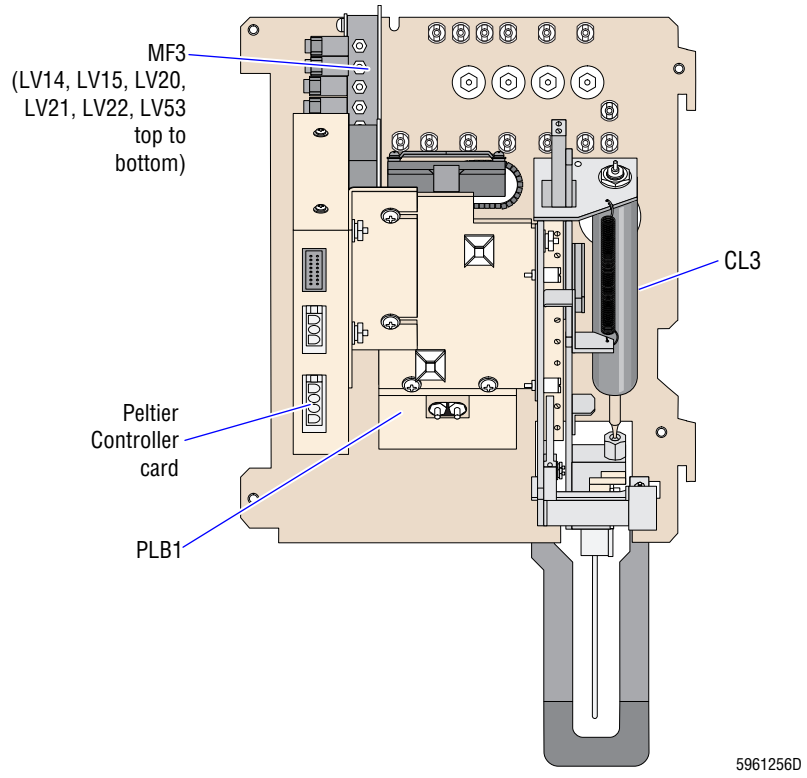

Figure A.5-3 CBC Module, Front View

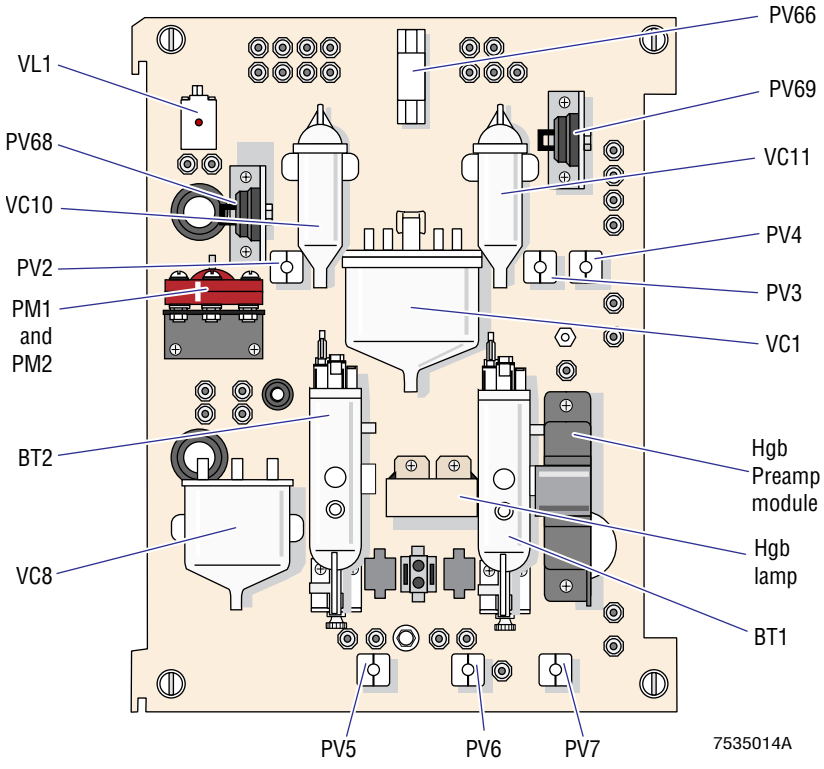

Figure A.5-4 CBC Module, Rear View

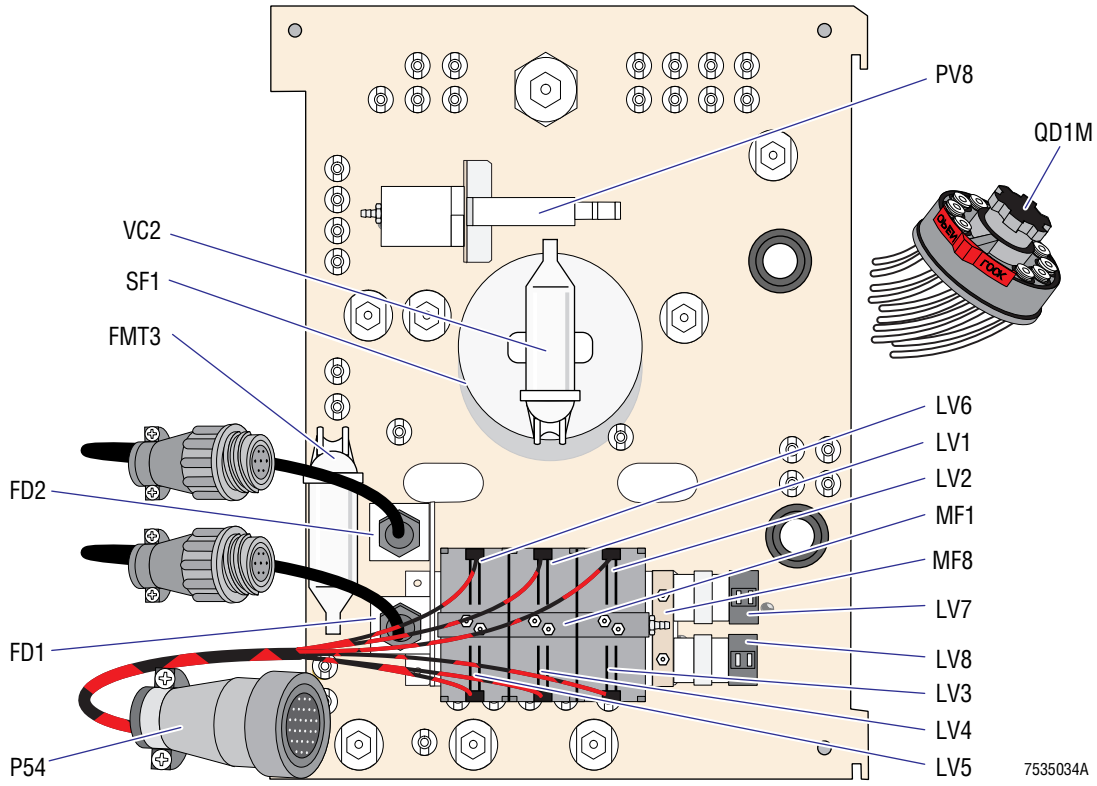

Figure A.5-5 Main Diluter Module, Front View

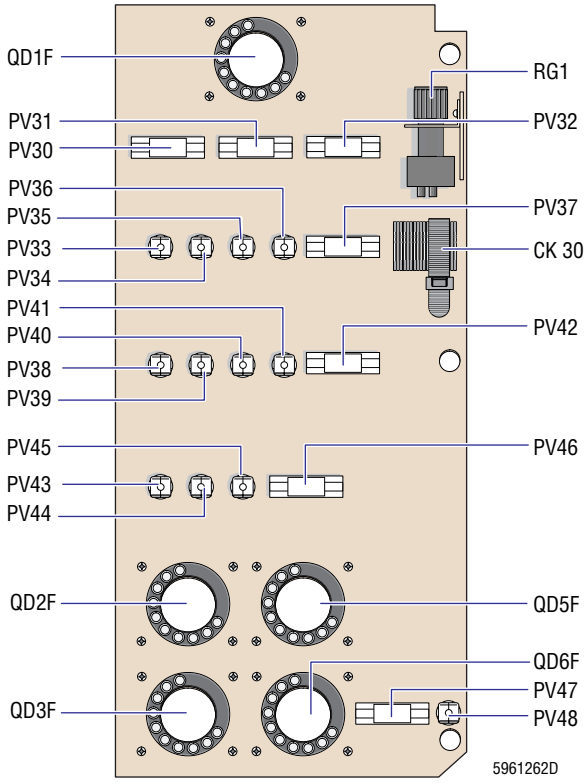

Figure A.5-6 Main Diluter Module, Right-Side View

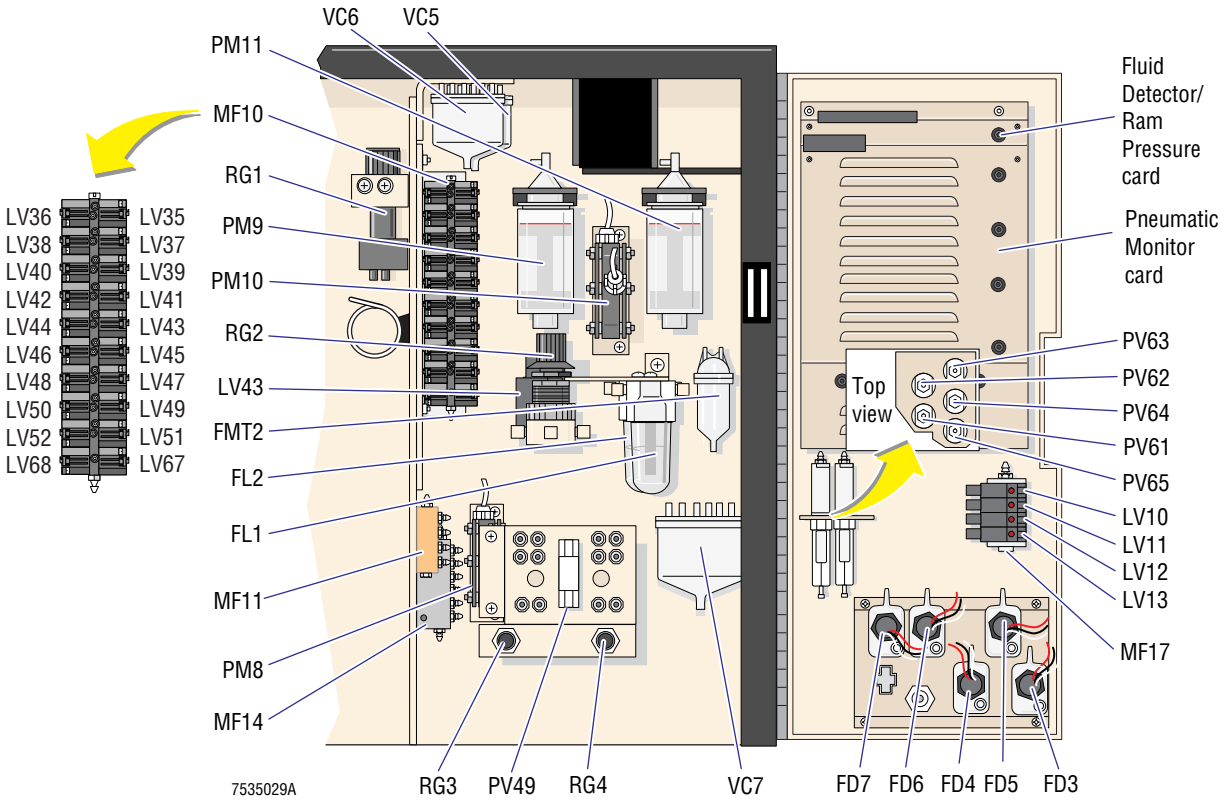

Figure A.5-7 Mixing Module, Front View

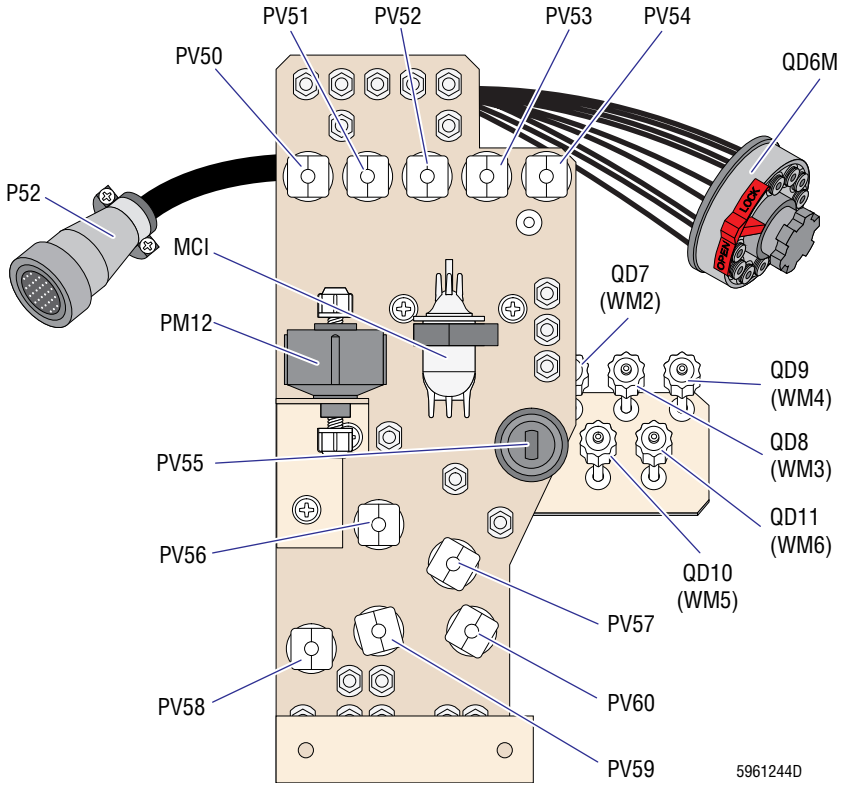

Figure A.5-8 Mixing Module, Rear View

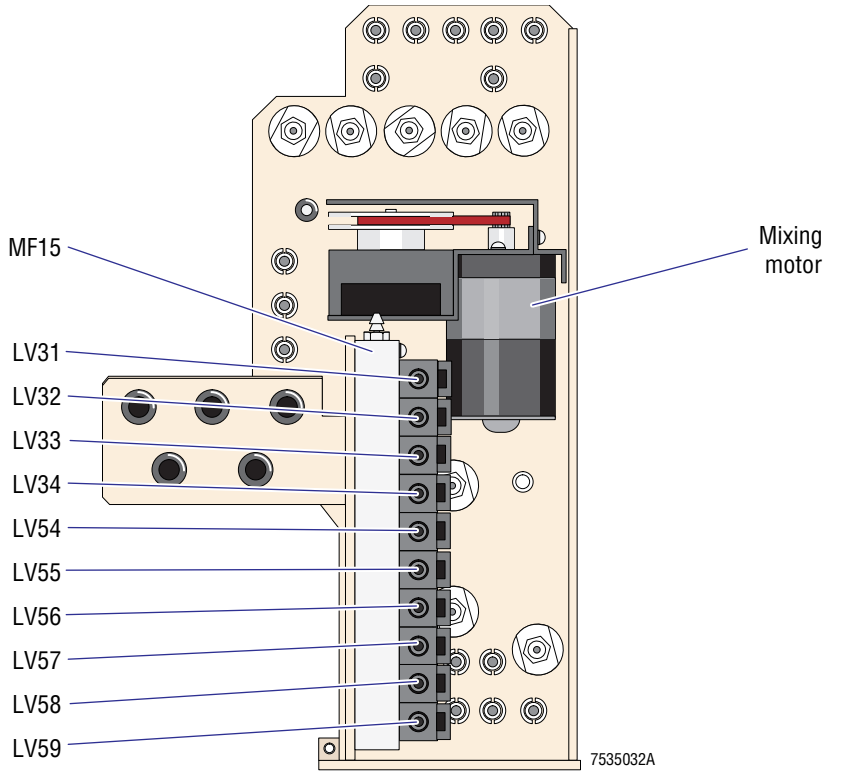

Figure A.5-9 Pump Module

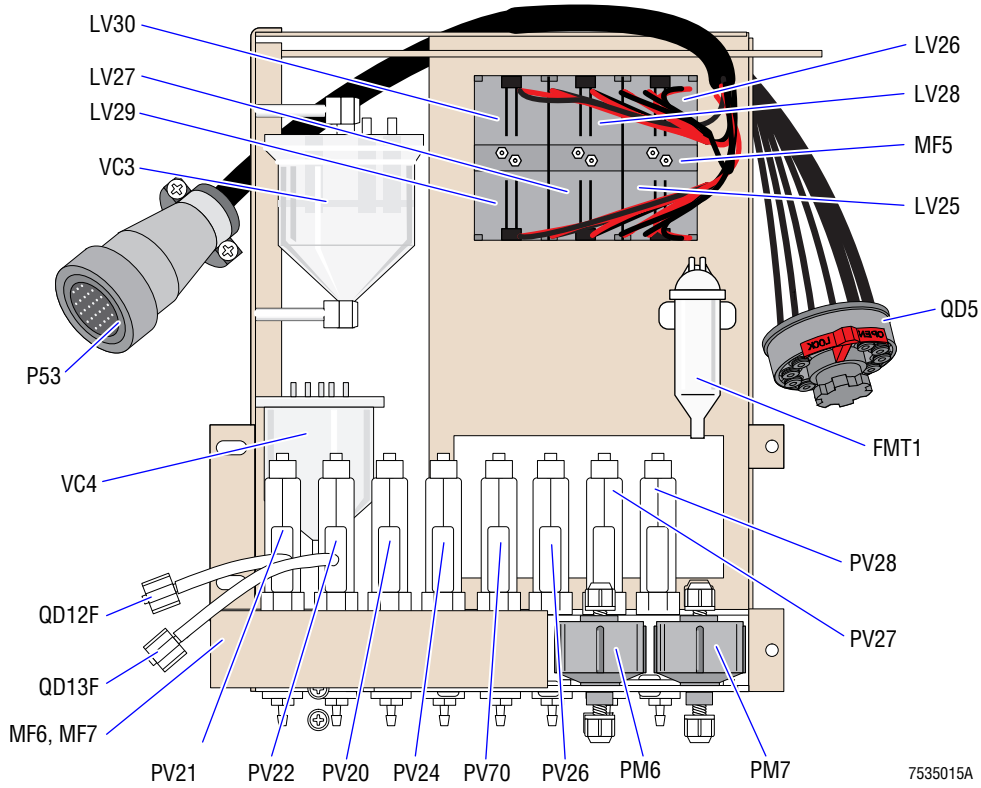

A.6 SOFTWARE MENU TREES

Figure A.6-1 HmX Analyzer with Rotary Cap-Pierce Module Software Menu Tree, Revision 1.3

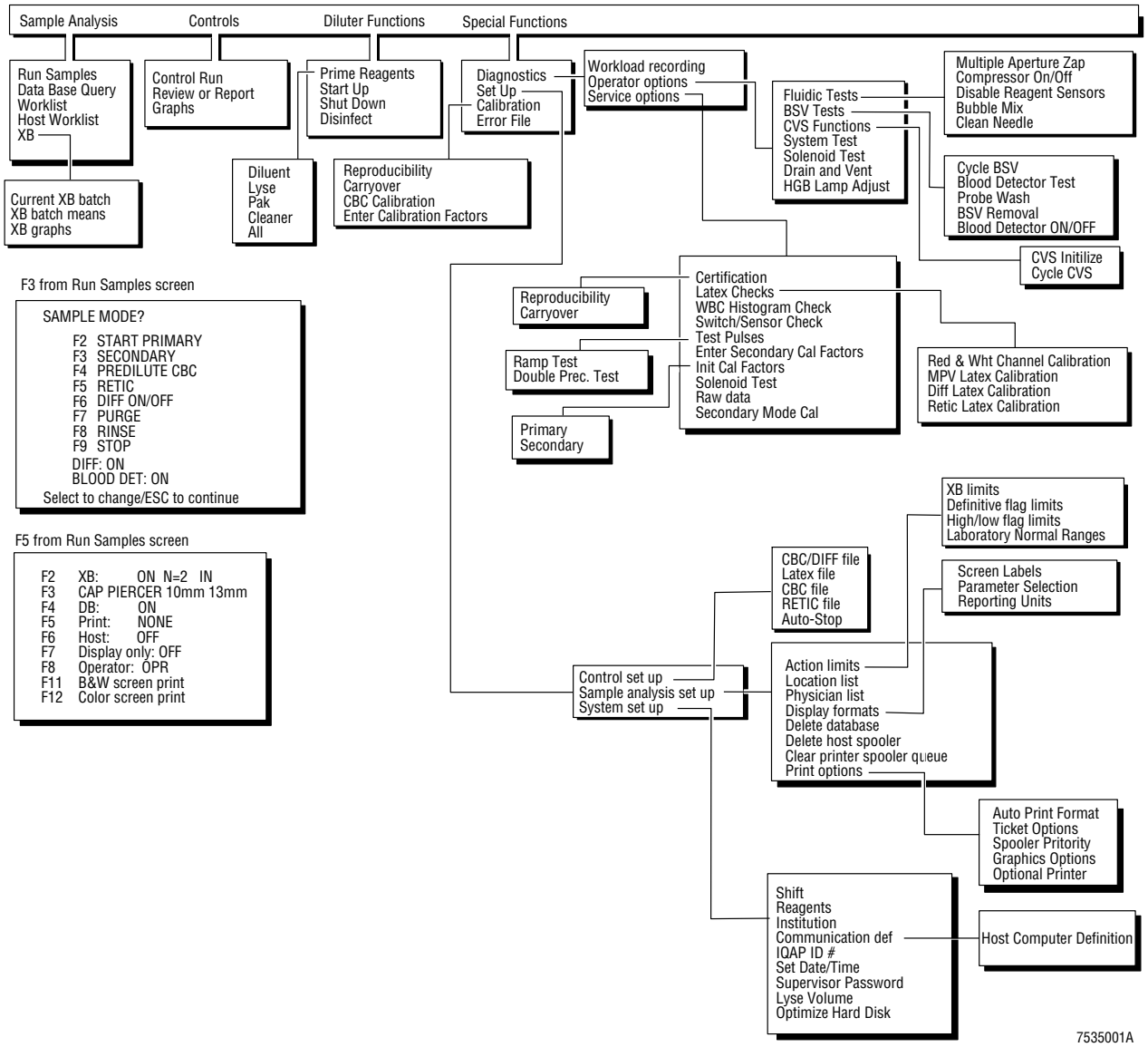

Figure A.6-2 HmX Analyzer with Autoloader Module Software Menu Tree, Revision 1.3

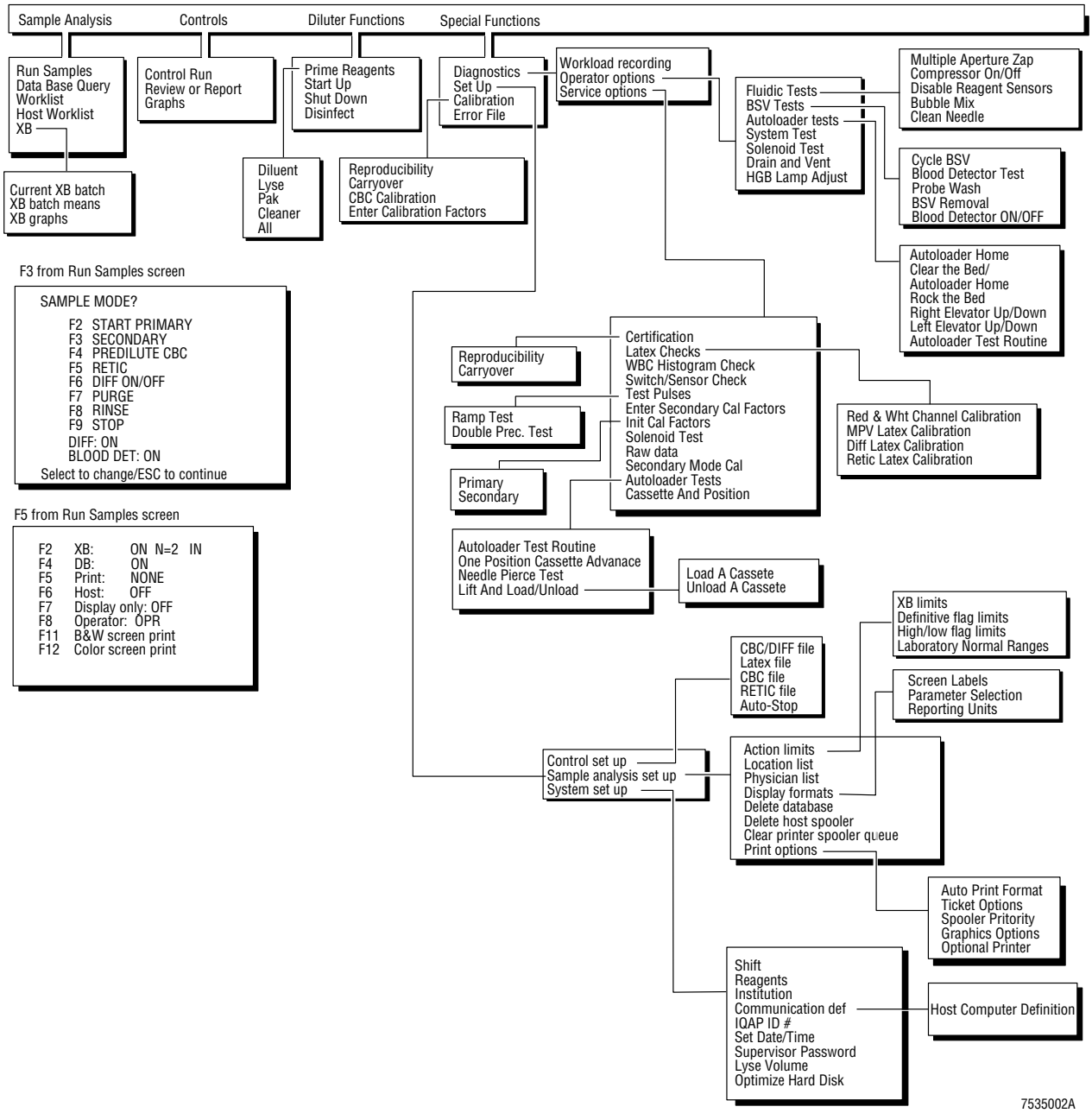

Figure A.6-3 Service Disk Software Utility Menu Tree

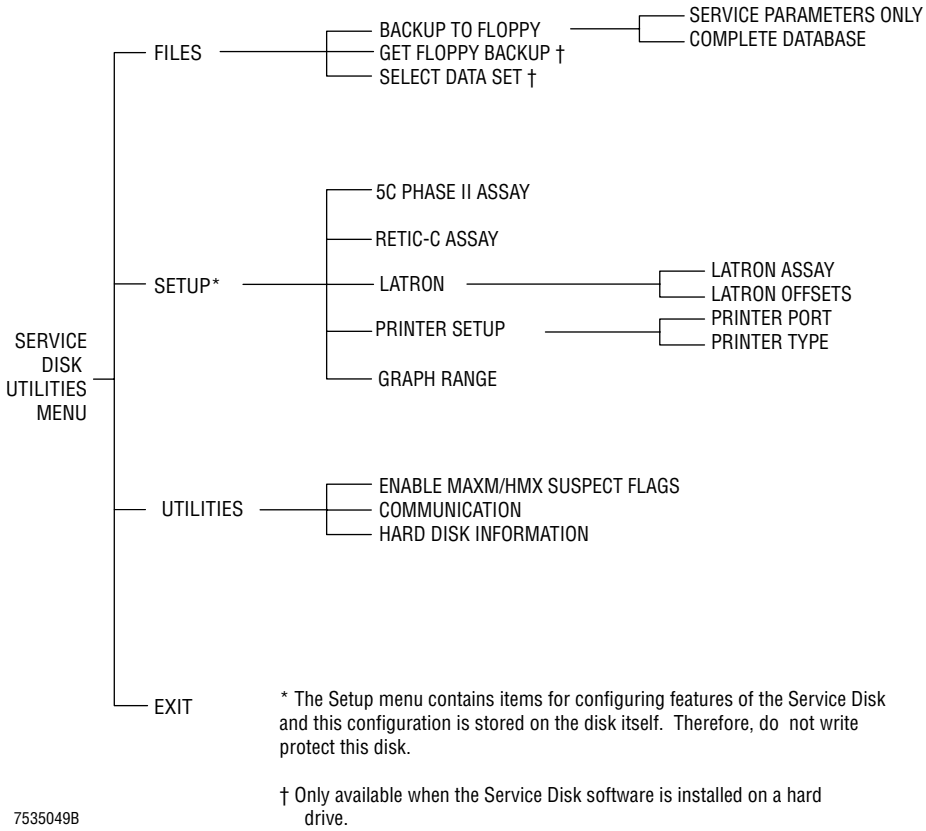

* The Setup menu contains items for configuring features of the Service Disk and this configuration is stored on the disk itself. Therefore, do not write protect this disk.

† Only available when the Service Disk software is installed on a hard drive.

B.1 FIELDS CONTAINED IN THE HmX ANALYZER DATABASE

About the List

The following list shows the database fields contained in the HmX analyzer database. Entries marked with an asterisk (*) are parameters that are captured by the Backup to Floppy, Service Parameters Only function. Not all of these parameters are displayed by the Service Disk. Some of the unmarked (no asterisk) database fields are not being used. These fields may contain invalid data or may be empty.

HmX Analyzer 1.3 Database Fields

		Field Name	Type	Length
	0	SAMPLE_MODE_FLAG	c	1
	1	POSITION_NUMBER	c	7
	2	POSITION_NUMBER_STATUS	c	1
*	3	ID_1	c	17
	4	ID_1_STATUS	c	1
*	5	JULIAN_DATE	l	4
*	6	ANALYZER_DATE	c	9
*	7	TIME_OF_DAY	c	9
*	8	RUN_MODE	c	1
	9	SAMPLE_TICKET_PRINTED_FLAG	c	1
	10	SAMPLE_PRINTED_FLAG	c	1
	11	SAMPLE_XMITED_FLAG	c	1
	12	SAMPLE_SAVED_FLAG	c	1
	13	SAMPLE_ARCHIVED_FLAG	c	l
	14	SAMPLE_WITH_WL_ENTRY_FLAG	c	1
	15	PREDILUTE_CBC	c	1
	16	BARCODE_ENABLED_DISABLED	c	1
	17	CS_ENABLED_DISABLED	c	1
	18	ID_LABEL_TYPE	c	1
	19	I_2_OF_5_LABEL_LENGTH	i	2
	20	REAGENT_SENSORS_OFF	c	1
	21	OPR	c	4
	22	INSTRUMENT_ID	c	9
	23	UNIT_FORMAT_CODE	c	1
	24	HGB_BLANK_VOLT	c	6
	25	HGB_SAMPLE_VOLT	c	6
*	26	WBC_1_VAL	f	4

		Field Name	Type	Length
*	27	WBC_2_VAL	f	4
*	28	WBC_3_VAL	f	4
*	29	WBC_A_VAL	f	4
*	30	RBC_1_VAL	f	4
*	31	RBC_2_VAL	f	4
*	32	RBC_3_VAL	f	4
*	33	RBC_A_VAL	f	4
	34	HGB_1_VAL	f	4
	35	HGB_2_VAL	f	4
	36	HGB_3_VAL	f	4
*	37	HGB_A_VAL	f	4
	38	HCT_1_VAL	f	4
	39	HCT_2_VAL	f	4
	40	HCT_3_VAL	f	4
*	41	HCT_A_VAL	f	4
*	42	MCV_1_VAL	f	4
*	43	MCV_2_VAL	f	4
*	44	MCV_3_VAL	f	4
*	45	MCV_A_VAL	f	4
	46	MCH_1_VAL	f	4
	47	MCH_2_VAL	f	4
	48	MCH_3_VAL	f	4
*	49	MCH_A_VAL	f	4
	50	MCHC_1_VAL	f	4
	51	MCHC_2_VAL	f	4
	52	MCHC_3_VAL	f	4
*	53	MCHC_A_VAL	f	4
	54	RDW_1_VAL	f	4
	55	RDW_2_VAL	f	4
	56	RDW_3_VAL	f	4
*	57	RDW_A_VAL	f	4
*	58	PLT_1_VAL	f	4
*	59	PLT_2_VAL	f	4
*	60	PLT_3_VAL	f	4

		Field Name	Type	Length
*	61	PLT_A_VAL	f	4
	62	PCT_1_VAL	f	4
	63	PCT_2_VAL	f	4
	64	PCT_3_VAL	f	4
	65	PCT_A_VAL	f	4
*	66	MPV_1_VAL	f	4
*	67	MPV_2_VAL	f	4
*	68	MPV_3_VAL	f	4
*	69	MPV_A_VAL	f	4
	70	PDW_1_VAL	f	4
	71	PDW_2_VAL	f	4
	72	PDW_3_VAL	f	4
*	73	PDW_A_VAL	f	4
*	74	REAL_RETIC_PCT	f	4
*	75	RETIC_ABS_VAL	f	4
	76	REAL_MRV	f	4
	77	REAL_RMI	f	4
*	78	LY_PC_VAL	f	4
*	79	MO_PC_VAL	f	4
*	80	NE_PC_VAL	f	4
*	81	EO_PC_VAL	f	4
*	82	BA_PC_VAL	f	4
*	83	LY_CNT_VAL	f	4
*	84	MO_CNT_VAL	f	4
*	85	NE_CNT_VAL	f	4
*	86	EO_CNT_VAL	f	4
*	87	BA_CNT_VAL	f	4
	88	TEST_NO	c	4
	89	WHITE_CYCLES	c	1
	90	RED_CYCLES	c	1
	91	PLT_CYCLES	c	1
	92	VALLEYS	f	20
	93	X_FLAGS	c	8
	94	PEAK_CHANNEL	i	10
	95	DIFF_COUNTS	i	10

		Field Name	Type	Length
	96	TOTAL_DC_COUNT	c	6
*	97	TOTAL_WHT_COUNT	c	6
*	98	DIFF_COMPUTATION_TIME	c	6
	99	EXPECTED_TIME_DIFF_CELL_CNT	c	6
*	100	FLOW_CELL_FULL_CLOG_FLAG	c	1
*	101	FLOW_CELL_PARTIAL_CLOG_FLAG	c	1
*	102	FLOW_CELL_PARTIAL_2_CLOG_FLAG	c	1
	103	CELLS_COUNTED_PER_SEC	i	40
	104	INVALID_DIFF_PERCENTS_FLAG	c	1
	105	REAL_INMAT_PCT	f	4
	106	REAL_MSCV	f	4
	107	TOTAL_RED_COUNT	c	6
	108	ABD_COUNT	c	7
	109	RETIC_COMPUTATION_TIME	c	6
	110	TOTAL_PULSE_COUNT	c	6
	111	RETIC_VALLEYS	f	40
	112	RTC_FLAGS	c	7
	113	DB_REV_LEVEL	1	2
	114	SERVICE_FLAG	c	1
*	115	DIFF_MODE	c	4
*	116	PARTIAL_ASPIRATION	c	1
	117	INVALID_DATA_FLAG	c	1
	118	WBC_VOTE_FLAG	c	1
	119	RBC_VOTE_FLAG	c	1
	120	HGB_VOTE_FLAG	c	1
	121	HCT_VOTE_FLAG	c	1
	122	MCV_VOTE_FLAG	c	1
	123	MCH_VOTE_FLAG	c	1
	124	MCHC_VOTE_FLAG	c	1
	125	RDW_VOTE_FLAG	c	1
	126	PLT_VOTE_FLAG	c	1
	127	PCT_VOTE_FLAG	c	1
	128	MPV_VOTE_FLAG	c	1
	129	PDW_VOTE_FLAG	c	1

		Field Name	Type	Length
	130	WBC_OVER_FLAG	c	1
	131	RBC_OVER_FLAG	c	1
	132	HGB_OVER_FLAG	c	1
	133	HCT_OVER_FLAG	c	1
	134	MCV_OVER_FLAG	c	1
	135	MCH_OVER_FLAG	c	1
	136	MCHC_OVER_FLAG	c	1
	137	RDW_OVER_FLAG	c	1
	138	PLT_OVER_FLAG	c	1
	139	PCT_OVER_FLAG	c	1
	140	MPV_OVER_FLAG	c	1
	141	PDW_OVER_FLAG	c	1
	142	WBC_INC_FLAG	c	1
	143	RBC_INC_FLAG	c	1
*	144	HGB_INC_FLAG	c	1
	145	HCT_INC_FLAG	c	1
	146	MCV_INC_FLAG	c	1
	147	MCH_INC_FLAG	c	1
	148	MCHC_INC_FLAG	c	1
	149	RDW_INC_FLAG	c	1
	150	PLT_INC_FLAG	c	1
	151	PCT_INC_FLAG	c	1
	152	MPV_INC_FLAG	c	1
	153	PDW_INC_FLAG	c	1
	154	WBC_A_FLAG	c	4
	155	RBC_A_FLAG	c	4
	156	HGB_A_FLAG	c	4
	157	HCT_A_FLAG	c	4
	158	MCV_A_FLAG	c	4
	159	MCH_A_FLAG	c	4
	160	MCHC_A_FLAG	c	4
	161	RDW_A_FLAG	c	4
	162	PLT_A_FLAG	c	4
	163	PCT_A_FLAG	c	4
	164	MPV_A_FLAG	c	4

	Field Name	Type	Length
165	PDW_A_FLAG	c	4
166	RETIC_PCT_FLAG	c	4
167	RETIC_ABS_FLAG	c	4
168	MRV_FLAG	c	4
169	RMI_FLAG	c	4
170	LY_PC_FLAG	c	4
171	MO_PC_FLAG	c	4
172	NE_PC_FLAG	c	4
173	EO_PC_FLAG	c	4
174	BA_PC_FLAG	c	4
175	LY_CNT_FLAG	c	4
176	MO_CNT_FLAG	c	4
177	NE_CNT_FLAG	c	4
178	EO_CNT_FLAG	c	4
179	BA_CNT_FLAG	c	4
180	FIT_NOFIT_FLAG	c	1
181	ERROR_10_FLAG	c	1
182	PHASE_FLAG	c	1
183	DATA_TYPE_FLAG	c	1
184	RDW_FLAG	c	1
185	SA_WBC_HIST_AVG_FLAG	c	1
186	SA_RBC_HIST_AVG_FLAG	c	1
187	SA_PLT_HIST_AVG_FLAG	c	1
188	DISPLAY_WBC_STATUS	c	1
189	DISPLAY_WBC_SUSPECT	c	1
190	DISPLAY_WBC_DEFINITIVE	c	1
191	DISPLAY_RBC_STATUS	c	1
192	DISPLAY_RBC_SUSPECT	c	1
193	DISPLAY_RBC_DEFINITIVE	c	1
194	DISPLAY_PLT_STATUS	c	1
195	DISPLAY_PLT_SUSPECT	c	1
196	DISPLAY_PLT_DEFINITIVE	c	1
197	WBC_ABNORMAL_FLAG	c	1
198	RBC_ABNORMAL_FLAG	c	1

		Field Name	Type	Length
	199	PLT_ABNORMAL_FLAG	c	1
	200	RTC_SAMPLE_FLAGGED	c	1
	201	SAMPLE_HAS_FLAGS	c	1
	202	WBC_RAW_AP_1	1	4
	203	WBC_RAW_AP_2	1	4
	204	WBC_RAW_AP_3	1	4
	205	RBC_RAW_AP_1	1	4
	206	RBC_RAW_AP_2	1	4
	207	RBC_RAW_AP_3	1	4
*	208	FLAG	c	57
*	209	ID_2	c	17
	210	SEQUENCE	c	7
	211	WORKLIST_STATUS	c	1
	212	DATE_OF_BIRTH	c	11
	213	SEX	c	1
	214	LOCATION	c	17
	215	PHYSICIAN	c	23
	216	ENTRY_DATE	c	9
	217	ENTRY_TIME	c	6
	218	USER_FIELD1	c	17
	219	USER_FIELD2	c	17
	220	USER_FIELD3	c	17
	221	COMMENT1	c	33
	222	COMMENT2	c	33
	223	CTRL_SIG_5C	c	4
	224	OVR_RBC	f	4
	225	OVR_WBC	f	4
	226	OVR_PLT	f	4
	227	OVR_MPV	f	4
	228	OVR_PDW	f	4
	229	OVR_MCV	f	4
	230	OVR_HCT	f	4
	231	OVR_PCT	f	4
	232	OVR_RDW	f	4
	233	OVR_HGB	f	4

		Field Name	Type	Length
	234	OVR_MCH	f	4
	235	OVR_MCHC	f	4
*	236	NEDCMN	c	1
*	237	NEDCSD	i	2
*	238	NERLSMN	c	1
*	239	NERLSSD	i	2
*	240	NEOPMN	c	1
*	241	NEOPSD	i	2
*	242	LYDCMN	c	1
*	243	LYDCSD	i	2
*	244	LYRLSMN	c	1
*	245	LYRLSSD	i	2
*	246	LYOPMN	c	1
*	247	LYOPSD	i	2
*	248	MODCMN	c	1
*	249	MODCSD	i	2
*	250	MORLSMN	c	1
*	251	MORLSSD	i	2
*	252	MOOPMN	c	1
*	253	MOOPSD	i	2
	254	C1NUM	i	2
	255	C1DCMN	c	1
	256	C1DCSD	i	2
	257	C1RLSMN	c	1
	258	C1RLSSD	i	2
	259	C1OPMN	c	1
	260	C1OPSD	i	2
	261	C2NUM	i	2
	262	C2DCMN	c	1
	263	C2DCSD	i	2
	264	C2RLSMN	c	1
	265	C2RLSSD	i	2
	266	C2OPMN	c	1
	267	C2OPSD	i	2

			Field Name	Type	Length
	*	268	PVRATIO	i	2
	*	269	PVRATIO2	i	2
		270	RESULTS_CRC	i	2
	*	271	SAMPLE_ID	k d	11
		272	ID_1_FLAG	k d	18
		273	ID_1_DT_FLAG	k d	22
		274	CP_FLAG	k d	8
		275	CP_DT_FLAG	k d	12
		276	ID_1_CP_FLAG	k d	25
		277	ID_1_CP_DT_FLAG	k d	29
		278	ID_2_FLAG	k d	18
		279	ID_2_DT_FLAG	k d	22
		280	DT_FLAG	k d	5
		281	FLAGGED	k d	5
		282	SAVED	k d	6
		====	10002 HIST_SCAT		
		2000	GRAPHICS	c	992
		2001	HIST_SCAT_CRC	i	2

ABBREVIATIONS, ABBREVIATIONS-1

CONTENTS

The following list is a composite of the abbreviations, acronyms and reference designators used in this manual. When the same abbreviation (or reference designator) is used for more than one word (or type of component), all meanings relevant to this manual are included, separated by semicolons.

SYMBOLS

≈ - approximately

°C - degrees Celsius

= - equals

°F - degrees Fahrenheit

> - greater than

≥ - greater than or equal to

•••• - incomplete computation

< - less than

≤ - less than or equal to

µA - micro amperes

µF - microfarad

µL - microliter

::::: - parameter code for flow-cell clog

% - percent

± - plus/minus

I - Ready

O - Standby

----- - total voteout

A

A - amperes

ac - alternating current

ACLO - ac voltage low

A/D - analog to digital

adjust. - adjustment

AMB TEMP - ambient temperature

ANSI - American National Standards Institute

APER - aperture

ASP - aspiration

AWG - American wire gauge

B

B - stepper motor

BA - basophils

BD - blood/bubble detector

BLK - black

BRN - brown

BSV - blood sampling valve

BT - bath

Btu - British thermal units

BUFF - buffer

C

C - Celsius; circuit; conductivity

cal - calibration

CBC - complete blood count

CBT - computer based training

CDRH - Center for Devices and Radiological Health

CD-ROM - compact disc-read only memory

CE - Conformitè Europèene, a conformance mark indicating that the product conforms to any applicable European Community directives with regard to product safety and electromagnetic compatibility.

CFG - configuration

CFR - Code of Federal Regulations

Ch - channel

CHK LBL - check label

CK - choke

CL - cylinder

CLR - clear

cm - centimeters

CMPSR - compressor

CPU - central processing unit

CR - current regulator (semi-conductor device)

CRC - cyclic redundancy check

CTL - control

CURNT - current

CV -coefficient of variation

D

d - diameter

DAC - digital to analog converter
DC - direct current
dc - direct current
DCN - document control number
DETECT - detector
diff - difference; differential
div - division
dL - deciliter
DLD - download
DLTR - Diluter
DMA - direct memory access
DMM - digital multimeter
DMS - data management system
DOS - disk operating system
DS - transmitter
DVM - digital voltmeter
DWNLD - download

E

ed. - edition
EMC - electromagnetic compatibility
EMI - electromagnetic interference
EO - eosinophils
EPROM - electronically programmable read only memory
EPS - Electronic Power Supply
ESD - electrostatic discharge
ETL - Electrical Testing Laboratories

F

F - Fahrenheit; fuse
FC - flow cell, full clog
FCC - Federal Communication Commission
FD - fluid detector
FF - feedthru fitting
FL - air water separator
fL - femtoliters
FM - foam trap
FMT - foam trap
FRC - field replaceable components
FRU - field replaceable units
ft - feet
FU - union fitting
fxt - fixed
FY - Y-fitting

G

g - gram
GAL - gate array logic
g/dL - grams per deciliter
GND - ground
GR - granulocytes
GRN - green
GRY - grey

H

Hct - hematocrit
HD - head
Hg - mercury
Hgb - hemoglobin
Hi - high
hsc - hex-socket
Hz - hertz

I

IC - integrated circuit
ID - identifcation
i.d. - internal diameter
IEC - International Electrical Commission
in. - inches
in. of Hg - inches of mercury
I/O - input/output
INV - invalid

J

J - receptacle connector

K

K - contactor relay

kg - kilograms

kV - kilovolts

L

laser - light amplification by stimulated emission of radiation

lb - pounds

LED - light emitting diode

LLS - linear light scatter

Lo - low

LPS - Laser Power Supply

LS - light scatter

LTX CAL - latex calibration

LYSE TRIG -lyse trigger

LV - solenoid

LY - lymphocytes

M

M - dc motor

m - meter

mA - milliamperes

MALS - median angle light scatter

MB - megabyte

MC - mixing chamber

MCH - mean cell (corpuscular) hemoglobin

MCHC - mean cell (corpuscular) hemoglobin concentration

MCV - mean cell (corpuscular) volume

MF - manifold

MFM - modified frequency modulation

MHz - mega hertz

mL - milliliter

mm - millimeter

MO - monocytes

MOD/CMD - mode command

mon -monitor

MPV - mean platelet volume

ms - milliseconds

MSG RCVD - message received

mV - millivolts

mVac - millivolts alternating current

N

N/A - not applicable

NE - neutrophils

nm - nanometer

ns - nanoseconds

O

o.d. - outer diameter

ORN - orange

OP - opacity

Optns - options

P

P - platelet; plug connector

param - parameter

PART. - partial

PC - partial clog

Pct - plateletcrit

PDW - platelet distribution width

pg - picograms

PLB - Peltier module

plt - platelet

PM - pump

PN - part number

poly - polyurethane

preamp - preamplifier

press - pressure

PROM - programmable read only memory

ppm - parts per million

PPS - Pneumatic Power supply

PS - power supply

psi - pounds per square inch

PRTR - Printer

PV - pinch valve

Q

Q - receiver (transistor)
QD - quick disconnect

R

R - red; resistor
RAM - random access memory
RBC - red blood cell; red blood cell count
RCP - rotary cap-pierce
RCVD - received
RDW - red distribution width
reg - regulator
REPRO - reproducibility
RET - reticulocyte
retic - reticulocyte
RF - radio frequency
RG - regulator
RIA - red aperture current
RLS - rotated light scatter
RMS - root mean square
ROM - read only memory
R/W PREAMP - red/white preamplifier
R/W/P PROC - red/white/platelet processor

S

S - scatter; second; sensor; switch
SEC MODE CAL - Secondary-mode calibration
SF - sweep-flow tank
SLO BLO - slow blow
ST - sheath tank
SVP - system verification procedure
SW - switch

T

TB - terminal board
temp - temperature
TP - test point
TRIG - trigger
TTM - Triple Transducer module
TX - transmission

U

U - opto-isolator switch
unc - unified coarse thread
UL - Underwriters Laboratory

V

V - volts; volume
Vac - vacuum; volts alternating current
VC - vacuum chamber
VCS - volume, conductivity and scatter
Vdc - volts direct current
VL - valve
vltg - voltage
volt - voltage
VREF - reference voltage

W

W - watt; white
w - wide
WBC - white blood cell; white blood cell count
WHT - white
WIA - white aperture current
WLST - worklist
WM - wire marker

X

XMITTED - transmitted
xrec - cross recess

Y

YEL - yellow

Numerics

3 CONSECUTIVE FLOWCELL CLOGS, 7.1-1
3 CONSECUTIVE NO MATCHES, 7.1-1
3 CONSECUTIVE NO READS, 7.1-1
3 CONSECUTIVE PARTIAL ASPIRATIONS, 7.1-1
3 CONSECUTIVE VOTEOUTS, 7.1-2
+5 Vdc OUT OF RANGE [XX.XX], 7.1-2
+6.3 Vdc OUT OF RANGE [XX.XX], 7.1-2
10 NO READ, NO MATCH, PART.ASP, 7.1-2
10-13 mm TUBE SENSOR ERROR, 7.1-2
+12 Vdc OUT OF RANGE [XX.XX], 7.1-3
-15 Vdc OUT OF RANGE [XX.XX], 7.1-3
+15 Vdc OUT OF RANGE [XX.XX], 7.1-3
16 mm TUBE SENSOR ERROR, 7.1-3
+24 Vdc OUT OF RANGE [XX.XX], 7.1-3
30 PSI OUT OF RANGE [XX.XX], 7.1-3
30-psi pressure
  acceptable range, A.1-5
  adjustment procedure, 4.25-3
  distribution, 2.5-3
30-psi pressure regulator
  function, A.5-5
  location, illustration, A.5-9
60-psi pressure
  acceptable range, A.1-5
  adjustment procedure, 4.25-1
  adjustment components, illustration, 4.25-2
  distribution, 2.5-2
60-psi pressure regulator
  location, illustration, 2.5-1
+240 Vdc OUT OF RANGE [XX.XX], 7.1-3
+300 Vdc OUT OF RANGE [XX.XX], 7.1-4
376 CPU card
  clearing the RAM, 4.1-3
  description, 2.4-2
  enabling the on-board battery, 3.3-2
  jumper locations, illustration, A.2-1
  jumper settings, table, A.2-1
  controls Hgb lamp, 2.4-7
  inputs/outputs, 2.4-3
  location, illustration, 2.4-1
  memory storage on RAM Timer card, 2.4-3
  receives pulses from VCS PROCESSOR card, 2.4-9
  role in histogram development, 2.4-10
  software download sequence, 2.4-2
+1350 Vdc OUT OF RANGE [XX.XX], 7.1-4

A

A/D FAILURE, 7.1-5
A/D MEASUREMENT ERROR, 7.1-5
abbreviations
  used in this manual, ABBREVIATIONS-1
adjustment procedures
  bar-code scanner alignment, Autoloader module, 4.39-1
  blood/bubble detector gains, 4.21-1
  C1 on the RF Detector Preamp card, 4.11-2
  cassette index motor and index hub gap, 4.42-1
  CBC lytic reagent and diluent delivery timing, 4.20-1
  CBC lytic reagent pumps, 4.18-1
  Clog Detector circuit, 4.11-1
  code wheel alignment, 4.31-1
  DC, RF, and LS gains, 4.4-2
  Electronic Power Supply voltages, 4.23-1
  Erythrolyse II reagent and StabiLyse reagent pumps, 4.16-1
  Hgb lamp, 4.27-2
  laser/flow cell alignment, 4.15-1
  needle-home and needle -forward sensors, 4.44-1
  pressure and vacuum, 4.25-1
  Primary-mode aspiration pump, 4.17-1
  Primary-mode calibration factors, 4.7-1
  RBC and WBC diluent dispensers, 4.19-1
  rinse block, 4.33-1
  rocker bed linkage, 4.40-1
  Secondary-mode calibration factors, 4.8-1
  specimen tube stoppers' pierce proximity, 4.41-1
  VCS flow rate (sample and sheath pressures), 4.10-1
air pump
  function, A.5-4
  location, illustration, A.5-6
ambient temperature sensor
  function, 2.6-3, A.5-1
  location, 2.6-2
  location, illustration, A.5-6
ANALYSIS NOT DONE, 7.1-5
Analyzer module
  card cage with circuit cards inserted, illustration, 2.4-1
  component part numbers, illustrated parts list, 8.2-43
  description, 2.4-1
  exhaust fan location, 3.1-2
  function, 2.4-1

location, illustration, 2.1-2
ANALYZER POWER INTERRUPTION, 7.1-5
Analyzer/Systems Control module. *See* Analyzer module
Aperture module and bath assembly
exploded view, 4.28-1
preventing damage to the O-rings, 4.28-2
replacement, 4.28-1
See also RBC bath; WBC bath
Aperture Voltage/Power Fail Detect card
location, illustration, 2.2-3
aspiration pump, Primary mode
function, A.5-4
location, illustration, A.5-6
volume adjustment procedure, 4.17-1
volume tolerances, A.1-10
aspiration pump, Secondary mode
function, A.5-4
location, illustration, A.5-6
aspirator tip
function, A.5-1
location, illustration, A.5-6
ATTENTION
heading defined, 1.1-4
Autoloader Interface card
block diagram, 2.7-2
component locations, illustration, A.2-2
connectors, table, A.2-2
function, 2.9-7
inputs/outputs, 2.9-8
location, illustration, 2.9-4
Autoloader module
Autoloader Interface card. *See* Autoloader Interface card
block diagram of the associated circuit cards, 2.7-2
component part numbers, illustrated parts list, 8.2-25, 8.2-27, 8.2-29, 8.2-31
component part numbers, master parts list, 8.1-2
description, 2.9-1
ensuring Sample Handler card is configured for, 2.7-4
function, 2.9-1
location, illustration, 2.1-2
main component descriptions, table of, 2.9-1
main component locations, front view, rocker bed backward, 2.9-4
main component locations, front view, rocker bed forward, 2.9-3
main component locations, rear view, 2.9-4
needle replacement procedure, 4.32-1
operation, summary, 2.9-5
preventing damage to during software download, 2.7-4
removal procedure, 4.34-1
retaining brackets location, illustration, 3.2-5
Rocker bed Interface card. *See* Rocker Bed Interface card
rocker bed. *See* rocker bed
sensor and switch functions and location references, table of, 4.43-1
shipping screw location, illustration, 3.2-5
shipping screw, removal, 3.2-5
AUTOLOADER PAUSED, 7.1-5
Autosensor Test card
function, 2.10-1
LEDs lit following power up, illustration, 2.10-1

B

B1. *See* carousel motor; load elevator motor
B2. *See* unload elevator motor
BA%
verifying reproducibility in the Primary mode, 4.5-1
verifying reproducibility in the Secondary mode, 4.5-2
BA% and BA#
part of reported WBC differential, 2.1-1
See also BA%; diff parameters
background count
diluent, acceptable limits, A.1-2
LATRON primer, acceptable limits, A.1-8
backwash
description, 2.11-10
BACKWASH NOT PERFORMED, 7.1-5
backwash pump
function, A.5-4
location, illustration, A.5-9
backwash safety sensor
action to change state, Autoloader module, 4.43-1
action to change state, Rotary Cap-Pierce module, 4.43-5
function and location reference, Autoloader module, 4.43-1

function and location reference, Rotary Cap-Pierce module, 4.43-5
BAD DOWNLOAD MSG RCVD - 196 CODE, 7.1-5
BAD PORT IN USE TO SEND DATA, 7.1-5
bar-code detector sensor
action to change state, 4.43-6
function and location reference, 4.43-6
function, type, and location reference, 2.8-2
location, illustration, 2.8-2
BARCODE NOT READ, 7.1-5
bar-code reader
function, 2.8-1, 2.9-1
location, illustration, 2.9-3
location, illustration, Autoloader module, 2.9-4
location, illustration, Rotary Cap-Pierce module, 2.8-2
not reading cassette and tube bar-code labels, 7.5-1
Bar-Code Reader Decoder card
code type default settings, table, A.4-1
communication default settings, table, A.4-1
configuration procedure, 4.38-1
configuring at instrument installation, 3.4-1
operations default settings, table, A.4-2
user outputs default settings, table, A.4-2
BARCODE READER DID NOT RESPOND, 7.1-5
bar-code scanner
alignment procedure, Autoloader module, 4.39-1
bar-code system, part numbers, 8.1-4
basophils. *See* BA
baths. *See* Aperture module and bath assembly; RBC bath; WBC bath
BD1. *See* blood/bubble detectors
BD2. *See* blood/bubble detectors
bed position sensors. *See* horizontal position sensor; pierce position sensor
bed-lock cylinder
adjusting to achieve optimal vertical tube-piercing position, 4.41-2
function, 2.9-2
location, illustration, 2.9-4
biological hazards, 1.2-4
contamination, prevention of, 1.2-4
personal injury, prevention of, 1.2-4
publications on decontamination, 1.2-4
WARNING for customers, 1.2-5
bleach chamber
function, A.5-5
location, illustration, A.5-9
bleach probe
function, A.5-1
location, illustration, A.5-6
block diagrams
DILUTER INTERFACE card and Solenoid Junction card, 2.4-5
electronic signal flow, HmX analyzer with Autoloader module, 2.3-2
electronic signal flow, HmX analyzer with Rotary Cap-Pierce module, 2.3-1
I/O card, 2.4-6
LS Preamp 5 module, 2.13-7
Peltier Controller card, 2.6-3
Pneumatic Monitor card, 2.5-4
R/W/P PROC card and R/W PREAMP card, 2.4-11
Sample Handler card with Autoloader module, 2.7-2
Sample Handler card with Rotary Cap-Pierce module, 2.7-3
VCS PROCESSOR card, 2.4-8
BLOOD COMPARISON OUT OF LIMITS, 7.1-5
blood sampling valve. *See* BSV
blood/bubble detectors
acceptable cable voltage readings, A.1-9
adjusting gains at instrument installation, 3.5-2
adjustments and test points, location, illustration, A.2-12
checks made during aspiration, 2.11-3
function, 2.11-3
gain adjustment procedure, 4.21-1
location, illustration, A.5-6
replace with a matched set, 4.21-2
boards, circuit. *See* cards, circuit
BSV
avoiding physical damage to when disassembling, 4.29-2
description, 2.11-2
disassembly, 4.29-1
flow paths and wire markers, illustration, 2.11-3
function in Primary mode, 2.11-4
function in Secondary mode, 2.11-7
location, illustration, A.5-6
ports and wire markers, illustration, 2.11-3
replace sections as a matched set, 4.29-1
replacement, 4.29-1
shipping spacers, removal, 3.2-4
See also BSV actuator
BSV actuator
assembly, exploded view, 4.29-5

function, A.5-1
location, illustration, A.5-6
replacement, 4.29-4
BSV module
component locations, A.5-6, A.5-7
component part numbers, illustrated parts list, 8.2-13, 8.2-15, 8.2-17
component part numbers, master parts list, 8.1-5
location, illustration, 2.1-2
BT1 (WBC bath)
function, A.5-2
location, illustration, A.5-7
See also WBC bath
BT2 (RBC bath)
function, A.5-2
location, illustration, A.5-7
See also RBC bath
bubble trap
function, A.5-5
location, illustration, A.5-7

C

C (conductivity or RF)
troubleshooting latex calibration problems, 7.4-1
VCS measurement, description, 2.13-1
cables, electronic
instrument, connections, 3.3-1
instrument, connections, illustration, 3.3-1
CAL FACTORS NOT WITHIN LIMITS, 7.1-6
calibration, CBC
assisting the customer with S-CAL calibration at instrument installation, 3.7-4
determining Secondary-mode calibration factors, 4.8-1
initial adjustment of Primary-mode calibration factors, 4.7-1
latex calibration procedure, 4.4-1
making initial adjustments at instrument installation, 3.7-3
tolerances and limits, A.1-1
verifying latex calibration at instrument installation, 3.7-1
calibration, VCS
diff latex calibration procedure, 4.4-2
retic latex calibration procedure, 4.4-2
tolerances and limits, A.1-8
troubleshooting diff or retic latex calibration problems, 7.4-1
verifying diff latex calibration at instrument installation, 3.7-2
verifying retic latex calibration at instrument installation, 3.7-2
See also VCS optimization
CANNOT BATCH. SYSTEM IN RUN MODE, 7.1-6
CANNOT CYCLE WHILE BATCH PROCESSING, 7.1-6
CANNOT MOVE CASSETTE ON BED, 7.1-6
CANNOT OPEN RAW.DAT FILE, 7.1-6
CANNOT ROCK BED, 7.1-6
CANNOT STORE RET RESULTS IN 5C FILE, 7.1-7
CANNOT TRANSMIT CAL FACTORS, 7.1-7
cards, circuit
376 CPU. *See* 376 CPU card
Aperture Voltage/Power Fail Detect. *See* Aperture Voltage/Power Fail Detect card
Bar-Code Reader Decoder. *See* Bar-Code Reader Decoder card
DILUTER INTERFACE. *See* DILUTER INTERFACE card
Electronic Power Supply Terminal. *See* Electronic Power Terminal card
Fluid Detector/Ram Pressure. *See* Fluid Detector/Ram Pressure card
I/O. *See* I/O card
part numbers, 8.1-8
Peltier Controller. *See* Peltier Controller card
Pneumatic Monitor. *See* Pneumatic Monitor card
Pneumatic Power Supply Buck-Boost Transformer Terminal. *See* Pneumatic Power Supply Buck-Boost Transformer Terminal card
R/W PREAMP. *See* R/W PREAMP card
R/W/P PROC. *See* R/W/P PROC Card
RAM Timer. *See* RAM timer card
RF Power Supply. *See* RF Power Supply card
Sample Handler. *See* Sample Handler card
VCS PROCESSOR. *See* VCS PROCESSOR card
carousel assembly
code wheel alignment procedure, 4.31-1
code wheel detail, illustration, 4.31-2
component part numbers, 8.2-23
function, 2.8-1
location, illustration, 2.8-2
motor replacement, 4.30-1
CAROUSEL DID NOT ROTATE, 7.1-7

carousel motor
function, type, and location reference, 2.8-1
location, illustration, 2.8-2
carryover checks
acceptable limits, A.1-2
procedure, 4.6-1
CARRYOVER IS ACTIVE, 7.1-7
carryover, Primary mode
acceptable limits, A.1-2
checking, procedure, 4.6-1
verifying at instrument installation, 3.7-2
carryover, Retic mode
acceptable limits, A.1-2
checking, procedure, 4.6-2
verifying at instrument installation, 3.7-3
carryover, Secondary mode
acceptable limits, A.1-2
checking, procedure, 4.6-2
verifying at instrument installation, 3.7-2
cassette index motor
and index hub gap adjustment, 4.42-1
function, type, and location reference, 2.9-2
location, illustration, 2.9-4
CASSETTE LABEL NO READ, 7.1-7
CASSETTE LOAD FAILURE, 7.1-7
cassette position 0 sensor
action to change state, 4.43-4
function and location reference, 4.43-4
function, type, and location reference, 2.9-3
location, illustration, 2.9-3
cassette position 1 sensor
action to change state, 4.43-4
function and location reference, 4.43-4
function, type, and location reference, 2.9-2
location, illustration, 2.9-3
cassette position 2 sensor
action to change state, 4.43-4
function and location reference, 4.43-4
function, type, and location reference, 2.9-2
location, illustration, 2.9-3
cassette position 3 sensor
action to change state, 4.43-4
function and location reference, 4.43-4
function, type, and location reference, 2.9-3
location, illustration, 2.9-3
CASSETTE UNLOAD FAILURE, 7.1-8
CAUTION
heading defined, 1.1-4
CBC
noise checks, 4.12-1
CBC CALIBRATION TABLE FULL, 7.1-8
CBC calibration. See calibration, CBC
CBC DATA ACQUISITION FAILURE, 7.1-8
CBC lyse sensor
action to change state, 4.43-2
function, 4.43-2
See also sensors, level
CBC lytic reagent
and diluent delivery timing check, 4.20-1
and diluent delivery timing check digital pressure meter hookup, illustration, 4.20-3
and diluent delivery timing check test box and transducer hookup, illustration, 4.20-2
and diluent delivery timing tolerances, A.1-7
and diluent timing, verifying at instrument installation, 3.7-1
choke configurations for changing delivery timing, A.1-7
function, 2.6-1
instrument setup procedure, 3.5-1
level sensing, 2.6-1
pumps. *See* CBC lytic reagent pumps
sensor (FD5). *See* CBC lyse sensor
tubing connection to instrument, illustration, 3.3-3
CBC lytic reagent pumps
function, A.5-4
location, illustration, A.5-7
volume adjustment procedure, 4.18-1
volume tolerances, A.1-10
CBC module
component locations, A.5-7, A.5-8
component part numbers, illustrated parts list, 8.2-3, 8.2-5
component part numbers, master parts list, 8.1-7
location, illustration, 2.1-2
CBC parameters
reported by instrument, 2.1-1
See also CBC technology
CBC technology
applying the Coulter principle, 2.12-1
determining the Hgb, 2.12-2
MCV, RDW, Plt and MPV voting criteria, 2.4-13
parameters reported, 2.1-1, 2.12-1
RBC and WBC counting sequences, 2.4-10
RBC and WBC voting criteria, 2.4-10
RBC, WBC, and Plt histogram development, 2.4-10

RBC, WBC, and Plt histogram particle accumulation, 2.4-10
See also calibration, CBC
circuit cards. *See* cards, circuit
circuits
Clog Detector adjustment, 4.11-1
CL3
function, A.5-2
location, illustration, A.5-7
CL4
location, illustration, 2.8-2
CL5
location, illustration, 2.8-2
CL6
location, illustration, 2.9-4
See also needle-drive cylinder
CL7
location, illustration, 2.9-4
CL8
location, illustration, 2.9-4
See also bed-lock cylinder
CL9
location, illustration, 2.9-4
clamp cylinder
location, illustration, 2.8-2
CLEANER OUT, 7.1-8
cleaner sensor
action to change state, Autoloader module, 4.43-1
action to change state, Rotary Cap-Pierce module, 4.43-5
function and location reference, Autoloader module, 4.43-1
function and location reference, Rotary Cap-Pierce module, 4.43-5
See also sensors, level
cleaning agent
container, neck support bracket installed, 3.3-4
function, 2.6-1
instrument setup procedure, 3.5-1
level sensing, 2.6-1
sensor (FD7). *See* cleaner sensor
tubing connection to instrument, illustration, 3.3-3
cleaning agent pump
function, A.5-4
location, illustration, A.5-9
cleaning procedures
flow cell, 4.13-1
lens block, 4.14-1
Clog Detector
adjusting circuit at instrument installation, 3.7-1
error generated by, 7.2-1
Clog Detector circuit adjustment, 4.11-1
COMMAND COMPLETION NOT SUCCESSFUL, 7.1-8
COMMAND TO DIGIBOARD NOT ACCEPTED, 7.1-8
compressor
monitoring bleed sequence, 2.5-5
shipping pins location, illustration, 3.2-3
COMPRESSOR DID NOT BLEED [XX.XX], 7.1-8
COMPRESSOR PRESSURE ERROR [XX.XX], 7.1-9
conductivity (C or RF)
VCS measurement, description, 2.13-1
connections, tubing
neck support bracket, 3.3-4
reagent input, illustration, 3.3-3
control files
setting up at instrument installation, 3.7-4
setup procedure, reference, 3.7-4
CONTROL SAMPLE IDENTIFIED, 7.1-9
COULD NOT ACCESS AUTOPRINT QUEUE, 7.1-9
COULD NOT ACCESS BATCH QUEUE, 7.1-9
COULD NOT ACCESS MANUAL QUEUE, 7.1-9
COULD NOT CLOSE AUTOPRINT QUEUE, 7.1-9
COULD NOT CLOSE BATCH QUEUE, 7.1-9
COULD NOT CLOSE MANUAL QUEUE, 7.1-9
COULD NOT DELETE AUTOPRINT DATA, 7.1-9
COULD NOT DELETE AUTOPRINT QUEUE, 7.1-10
COULD NOT DELETE BATCH DATA, 7.1-10
COULD NOT DELETE BATCH QUEUE, 7.1-10
COULD NOT DELETE MANUAL DATA, 7.1-10
COULD NOT DELETE MANUAL QUEUE, 7.1-10
COULD NOT FIND AUTOPRINT DATA, 7.1-10
COULD NOT FIND BATCH DATA, 7.1-10
COULD NOT FIND MANUAL DATA, 7.1-10
COULD NOT OPEN AUTOPRINT QUEUE, 7.1-10
COULD NOT OPEN BATCH QUEUE, 7.1-10
COULD NOT OPEN MANUAL QUEUE, 7.1-11
COULD NOT READ FROM AUTOPRINT QUEUE, 7.1-11
COULD NOT READ FROM BATCH QUEUE, 7.1-11
COULD NOT READ FROM MANUAL QUEUE, 7.1-11
COULD NOT WRITE TO AUTOPRINT QUEUE, 7.1-11
COULD NOT WRITE TO BATCH QUEUE, 7.1-11

COULD NOT WRITE TO MANUAL QUEUE, 7.1-11
Coulter principle
  applying, 2.12-1
  sensing area, illustration, 2.12-1
COULTER® HmX Instrument Reference Form, part number, 5.1-1
COULTER® SYSTEM VERIFICATION FORM, part number, 5.1-1
counting sequences, RBC and WBC, 2.4-10
covers, instrument
  part numbers, 8.1-9
CRC ERROR ON READ SYSTEM.CFG FILE, 7.1-11
CTL FILE I/O ERROR, 7.1-11
CTL FILE NN, <FILE> IS FULL, 7.1-11
customer documents. *See* manuals, customer
cylinders
  bed lock. *See* bed-lock cylinder
  needle drive. *See* needle-drive cylinder

D

data accumulation
  for RBC and WBC counts, 2.4-10
  for RBC, WBC and Plt histograms, 2.4-10
Data Management System. *See* DMS
database
  fields, B.1-1
DC (V or volume)
  troubleshooting latex calibration problems, 7.4-1
  VCS measurement, description, 2.13-1
diagrams, block. *See* block diagrams
DIFF DATA ACQUISITION FAILURE, 7.1-12
diff latex calibration. *See* calibration, VCS
diff leukocyte preservative
  function, 2.6-1
  level sensing, 2.6-1
  See also StabiLyse reagent
diff lytic reagent
  function, 2.6-1
  level sensing, 2.6-1
  See also Erythrolyse II reagent
diff mixing chamber
  function, A.5-3
  location, illustration, A.5-9
diff parameter
  noise checks, 4.12-1
diff parameters
  method used for determining, 2.13-1
  reported by instrument, 2.1-1
  See also VCS technology
diff pressure
  acceptable range, A.1-5
  monitoring, 2.5-4
DIFF PRESSURE OUT OF RANGE, 7.1-12
diff waste chamber
  function, A.5-5
  location, illustration, A.5-9
diluent
  and CBC lytic reagent delivery timing check, 4.20-1
  and CBC lytic reagent delivery timing check digital pressure meter hookup, illustration, 4.20-3
  and CBC lytic reagent delivery timing check test box and transducer hookup, illustration, 4.20-2
  and CBC lytic reagent delivery timing tolerances, A.1-7
  and lytic reagent timing, verifying at instrument installation, 3.7-1
  choke configurations for changing delivery timing, A.1-7
  conditions causing a *PC2* error, 7.2-2
  container, neck support bracket installed, 3.3-4
  dispensers. *See* RBC diluent dispenser; WBC diluent dispenser
  function, 2.6-1
  instrument setup procedure, 3.5-1
  level sensing, 2.6-1
  sensor (FD6). *See* diluent sensor
  temperature control for mixing chamber rinse, 2.6-3
  tubing connection to instrument, illustration, 3.3-3
DILUENT COMPARISON OUT OF LIMITS, 7.1-12
DILUENT OUT, 7.1-12
diluent sensor
  action to change state, Autoloader module, 4.43-1
  action to change state, Rotary Cap-Pierce module, 4.43-5
  function and location reference, Autoloader module, 4.43-1
  function and location reference, Rotary Cap-Pierce module, 4.43-5
  See also sensors, level
Diluter
  backwash description, 2.11-10
  color coding of tubing, 2.11-2

description, 2.11-1
fluidic components, table of descriptions and location references, A.5-1
function, 2.11-1
function of blood/bubble detectors, 2.11-3
function of BSV, 2.11-2
function of solenoid valves, 2.11-1
hardware, miscellaneous, part numbers, 8.1-12
location, illustration, 2.1-2
main components, 2.11-1
modules that can be repositioned for better access, 2.11-1
sample processing description, 2.11-4
DILUTER INTERFACE card
block diagram, 2.4-5
component locations, illustration, A.2-3
controls solenoids in the Diluter, 2.11-1
function, 2.4-4
inputs/outputs, 2.4-4
jumper setting, A.2-3
location, illustration, 2.4-1
lyse trigger test point, location/function, 2.4-4
test point, A.2-3
DILUTER TABLE ERROR, 7.1-12
DISK DRIVE C: COULD NOT BE ACCESSED, 7.1-12
DISK DRIVE C: IS FULL, 7.1-13
DISK DRIVE D: IS FULL, 7.1-13
DISK FULL - ARCHIVING DISCONTINUED, 7.1-13
dispensers, diluent. *See* RBC diluent dispenser; WBC diluent dispenser
DMS
cable connections, illustration, 3.3-1
fan location, 3.1-2
leakage current specifications, 2.1-5
line voltage select switch. *See* DMS line voltage select switch
location requirements, 3.2-1
service options available, 4.2-2
software download sequence, 2.4-2
testing at instrument installation, 3.4-1
DMS Configuration Listing for STKS and MAXM Series Systems
part number, 1.1-2
DMS line voltage select switch
caution when setting, 3.3-2
location, illustration, 3.3-2
setting at instrument installation, 3.3-2
DMS TIMEOUT, 7.1-13
documents
manuals. *See* manual; manuals, customer
safety. *See* documents, safety
service forms, provided in manual, 5.1-1
documents, safety
ANSI standard 136.1, SAFE USE OF LASERS, ordering information, 1.2-1
biological decontamination references, 1.2-4
laser radiation regulations, 1.2-2
door interlock
action to change state, Autoloader module (S5), 4.43-2
action to change state, Rotary Cap-Pierce module (S18), 4.43-6
function and location reference, Autoloader module (S5), 4.43-2
function and location reference, Rotary Cap-Pierce module (S18), 4.43-6
function, type, and location reference, Autoloader module (S5), 2.9-2
function, type, and location reference, Rotary Cap-Pierce module (S18), 2.8-2
location, illustration, Autoloader module (S5), 2.9-3
location, illustration, Rotary Cap-Pierce module (S18), 2.8-2
doors, instrument
part numbers, 8.1-9
DOWNLOAD NOT SUCCESSFUL, 7.1-13
drain line
tubing connection to instrument, illustration, 3.3-3
DS2 (hand detector sensor). *See* hand detector sensor
DS2 (bar-code detector sensor). *See* bar-code detector sensor

E

electronic hazards, 1.2-4
instrument damage, prevention of, 1.2-4
personal injury, prevention of, 1.2-4, 2.2-3
electronic interference
on the ac input line, acceptable limits, A.1-5
preventing, 3.3-1, 3.3-3
See also electronic noise
electronic noise
checking at instrument installation, 3.7-1
checking levels on the RBC, WBC, and Plt channels, 4.12-1
checking levels, procedure, 4.12-1

checking levels, troubleshooting procedure, 7.3-1
checking RMS noise levels on the DC, RF, and LS channels, 4.12-1
RBC, WBC, Plt test points for measurement, 2.4-13
tolerances, CBC, A.1-2
tolerances, diff and retic, A.1-8
troubleshooting problems on the RF channel, 7.3-3
VCS test points for measurement, 2.4-9
See also electronic interference
Electronic Power Supply
caution required when installing, 3.2-4, 4.22-2
component part numbers, illustrated parts list, 8.2-39
configuration criteria for ac line input, table, A.3-2
configuring Electronic Power Supply Terminal card after replacing Electronic Power Supply, 4.22-1, 4.23-1
configuring Electronic Power Supply Terminal card at instrument installation, 3.2-4
connectors and adjustments, illustration, 4.23-2
connectors and test points, illustration, 4.23-2
connectors, front and top, illustration, 2.2-2
connectors, illustration, 4.22-1
description, 2.2-1
exhaust fan location, 3.1-2
function, 2.2-2
fuses, part numbers, 8.1-9
input power switch settings for ac line input, table, A.3-1
location, illustration, 2.1-2, 2.1-3
main components, 2.2-1
main components, front view, illustration, 2.2-2
main components, top view, illustration, 2.2-3
power cable, length specification, 3.1-1
replacement procedure, 4.22-1
Terminal card jumpers and connections, table, A.3-2
test points and adjustments, table, A.3-2
testing at instrument installation, 3.4-1
voltages adjustment procedure, 4.23-1
Electronic Power Supply Terminal card
configuring after Electronic Power Supply replacement, 4.22-1, 4.23-1
configuring at instrument installation, 3.2-4
jumpers and connections, table, A.3-2
electronic service manuals, obtaining, 1.1-1
Electronic system
Analyzer module. *See* Analyzer module
cable connections, 3.3-1
cable connections, illustration, 3.3-1
color coding of wires, 2.2-3
Electronic Power Supply. *See* Electronic Power Supply
input requirements, 3.1-1
overview, 2.2-1
precautions for preventing electronic noise, 3.3-1, 3.3-3
signal flow, HmX analyzer with Autoloader module, 2.3-2
signal flow, HmX analyzer with Rotary Cap-Pierce module, 2.3-1
voltage adjustments, 4.23-1
voltage monitoring, 2.2-4
elevator. *See* load elevator; unload elevator
engineering schematics
available but not included in manual, list off, 6.1-1
included in manual, list of, 6.1-1
EO%
verifying reproducibility in the Primary mode, 4.5-1
verifying reproducibility in the Secondary mode, 4.5-2
EO% and EO#
part of reported WBC differential, 2.1-1
See also diff parameters
eosinophils. *See* EO
ERROR FILE I/O ERROR, 7.1-13
error messages
tables of, 7.1-1
See also individual messages
ERROR READING SYSTEM.CFG FILE, 7.1-13
ERROR UPDATING SYSTEM.CFG FILE, 7.1-13
Erythrolyse (reagent) sensor
action to change state, 4.43-2
function and location reference, 4.43-2
See also sensors, level
Erythrolyse II reagent
conditions causing a *PC2* error, 7.2-2
instrument setup procedure, 3.5-1
pumps. *See* Erythrolyse II reagent pumps
sensor (FD3). *See* Erythrolyse (reagent) sensor
temperature control, 2.6-3
tubing connection to instrument, illustration, 3.3-3
See also diff lytic reagent

Erythrolyse II reagent pumps
function, A.5-4
location, illustration, A.5-10
replacement procedure, 4.16-8
volume adjustment procedure, 4.16-1
volume optimization work flow, illustration, 4.16-3
EXTENSIVE FLAGS GENERATED, 7.1-13

F

FC, 7.2-1
FC1 (flow cell). *See* flow cell
FD1 (RBC bath overflow detector)
function, A.5-2
location, illustration, A.5-8
FD2 (WBC bath overflow detector)
function, A.5-2
location, illustration, A.5-8
FD3 (Erythrolyse reagent sensor)
function, A.5-2
location, illustration, A.5-9
See also Erythrolyse (reagent) sensor
FD4 (Stabilyse reagent sensor)
function, A.5-2
location, illustration, A.5-9
See also Stabilyse (reagent) sensor
FD5 (CBC lyse sensor)
function, A.5-2
location, illustration, A.5-9
See also CBC lyse sensor
FD6 (diluent sensor)
function, A.5-2
location, illustration, A.5-9
See also diluent sensor
FD7 (cleaner sensor)
function, A.5-2
location, illustration, A.5-9
See also cleaner sensor
FILE I/O ERROR, 7.1-13
FL1
function, A.5-2
location, illustration, A.5-9
FL2
function, A.5-2
location, illustration, A.5-9
flow cell
and laser alignment procedure, 4.15-1
and laser alignment procedure problems, troubleshooting, 4.15-1
and laser alignment work flow, illustration, 4.15-1
cleaning procedure, 4.13-1
errors, troubleshooting, 7.2-1
location, illustration, 2.13-3
ports and sample and reagent flow, illustration, 2.13-4
Flow-Cell module
location, illustration, 2.1-3
See also TTM
Fluid Detector/Ram Pressure card
component locations, illustration, A.2-4
connectors, table, A.2-4
function, 2.6-1
LED functions, table, A.2-4
LED locations/functions, 2.6-2
location, illustration, 2.1-3, A.5-9
FMT1
function, A.5-2
location, illustration, A.5-10
FMT2
function, A.5-2
location, illustration, A.5-9
FMT3
function, A.5-3
location, illustration, A.5-8
FMT4
function, A.5-3
location, illustration, A.5-6
forms, service, provided in manual, 5.1-1
full cass index rotation sensor
action to change state, 4.43-3
function and location reference, 4.43-3
function, type, and location reference, 2.9-2
location, illustration, 2.9-3
fuses
panel location, illustration, 2.1-4
part numbers, 8.1-9
ratings and functions, table, A.3-1

G

guidelines
for servicing the instrument, 4.1-1

H

hand detector sensor
action to change state, 4.43-6
function and location reference, 4.43-6

function, type, and location reference, 2.8-1
location, illustration, 2.8-2
hardware, miscellaneous
part numbers, 8.1-12
hazards
biological, 1.2-4
electronic, 1.2-4
laser beam, 1.2-1
laser radiation, 1.2-2
hematocrit. *See* Hct
hemoglobin. *See* Hgb
Hgb
acceptable blank voltage, A.1-9
adjusting blank at instrument installation, 3.5-1
checking carryover in the Primary mode, 4.6-1
lamp. *See* Hgb lamp
method used for determining, 2.12-2
Preamp module. *See* Hgb Preamp module
regulator location, 2.4-7
verifying reproducibility in the Primary mode, 4.5-1
verifying reproducibility in the Secondary mode, 4.5-2
Hgb lamp
adjustment procedure, 4.27-2
control, 2.4-7
function, 2.12-2, A.5-1
location, illustration, A.5-7
HGB OUT OF RANGE, 7.1-14
Hgb Preamp module
function, A.5-1
location, illustration, A.5-7
preventing electronic damage to, 4.27-1
replacement procedure, 4.27-1
high vacuum
acceptable range, A.1-5
distribution, 2.5-3
verification, 4.25-4
HIGH VACUUM OUT OF RANGE, 7.1-14
histograms
particle accumulation, 2.4-10
RBC, WBC, and Plt development, 2.4-10
HmX ANALYZER RECOMMENDED MAINTENANCE SCHEDULE, part number, 5.1-1
HmX analyzer. *See* instrument
HMX TX BUFF REQUEST NOT SUCCESSFUL, 7.1-14
horizontal position sensor
action to change state, 4.43-3
function and location reference, 4.43-3
function, type, and location reference, 2.9-3
location, illustration, 2.9-4
HOST COMM. PARAMETERS UNDEFINED, 7.1-14
HOST TX BUFF REQUEST NOT SUCCESSFUL, 7.1-14
humidity and temperature
requirements, 3.1-2

I

I/O card
block diagram, 2.4-6
converts analog Hgb reading to digital value, 2.12-2
function, 2.4-6
inputs/outputs, 2.4-7
issues ZAP COMMAND to R/W PREAMP card, 2.4-14
jumper locations, illustration, A.2-5
jumper settings, A.2-5
location, illustration, 2.4-1
monitors LS offset voltage, 2.13-8
monitors voltage for Electronic system, 2.2-4
monitors waste float sensor, 2.6-5
ID CANCELED-TIME EXPIRED, 7.1-15
IDENTIFICATION REQUIRED, 7.1-15
ILLEGAL INSTRUMENT REPLY, 7.1-15
IMPORTANT
heading defined, 1.1-4
INCOMPATIBLE SAMPLE HANDLER SOFTWARE, 7.1-15
INCOMPLETE NEEDLE EXTRACT, 7.1-15
INCOMPLETE NEEDLE PIERCE, 7.1-15
INCOMPLETE NEEDLE RETRACT, 7.1-16
INCOMPLETE RAW DATA TRANSMISSION, 7.1-16
INCOMPLETE TUBE FORWARD, 7.1-16
INCOMPLETE TUBE RETRACT, 7.1-16
INCONSISTENT SAMPLE HANDLER HARDWARE, 7.1-16
installation procedures, instrument
account/instrument information forms for, 3.8-1
adjustments and calibration, 3.7-1
checklist, 3.8-1
connecting assemblies, 3.3-1
initial setup, 3.2-1
initial system setup, 3.5-1
preinstallation checks, 3.1-1
system testing, 3.6-1
testing/configuring assemblies, 3.4-1

installation procedures, options and upgrades
Graphic Printer, reference, 3.9-1
installation, instrument
account information form, example for printing, 3.8-1
data log sheets, examples for printing, 3.8-2
DMS location requirements, 3.2-1
main component layout, illustration, 3.2-1
supplies required, 3.1-3
use of Installation Report Form, 3.2-5
installation, software
reference, 3.4-1
institution information, setting up, 3.5-1
instrument
database fields, B.1-1
diagnostic products reference, 2.1-5
drainage requirements, 3.1-3
electrical input requirements, 3.1-1
electronic cable connections, 3.3-1
electronic cable connections, illustration, 3.3-1
entering institution information, 3.5-1
function, 2.1-1
guidelines for servicing, 4.1-1
installation. *See* installation, instrument; installation procedures, instrument
leakage current specifications, 2.1-5
lockups, 7.5-1
main components, 2.1-1
maintenance and verification procedures recommended, 5.1-1
modes of operation, 2.1-5
parameters reported, 2.1-1
performance specifications and characteristics reference, 2.1-4
physical specifications reference, 2.1-4
powering down, 4.1-2
powering up, 4.1-2
reagent and drain connections, 3.3-3
reagent and drain connections, illustration, 3.3-3
resetting, 4.1-2
service forms provided in manual, 5.1-1
software download sequence, 2.4-2
software menu trees. *See* software menu trees
space and accessibility requirements, 3.1-1
specifications. *See* specifications
supplies required at installation, 3.1-3
systems, list of, 2.1-4
temperature and humidity requirements, 3.1-2
ventilation requirements, 3.1-2
verification procedure, 5.1-1
whole blood verification procedure, 4.3-1
INSTRUMENT CONFIGURATION ERROR, 7.1-16
INSTRUMENT INTERNAL ERROR XXX, 7.1-16
INSTRUMENT REPLY TIMEOUT, 7.1-17
INSTRUMENT TO 196 CODE DWNLD FAILED, 7.1-17
Instrument Verification Form. *See* system verification procedure
interconnect cables
part numbers, 8.1-10
interference, electronic. *See* electronic interference
INV LABEL - STORED IN CURRENT MODE, 7.1-17
INVALID 376 MOD/CMD RCVD 196 DWNLD, 7.1-17
INVALID 376 MOD/CMD RCVD 196CFG DLD, 7.1-17
INVALID MOD/CMD IN DLTR DWNLD, 7.1-17
INVALID MOD/CMD RCVD 376CFG DWNLD, 7.1-17
INVALID MOD/CMD RCVD IN DLTR DWNLD, 7.1-17
INVALID SYSTEM COMMAND, 7.1-17

K

kits
options and upgrades, part numbers, 8.1-16
Service Resource, part number, 1.1-1

L

laboratory information, setting up, 3.5-1
lamps
Hgb. *See* Hgb lamp
laser
and flow cell alignment procedure, 4.15-1
and flow cell alignment procedure problems, troubleshooting, 4.15-1
and flow cell alignment work flow, illustration, 4.15-1
documents, regulatory, 1.2-2
in TTM, radiation classification of, 1.2-2
TTM, location, illustration, 2.13-3
laser hazards
light beam, 1.2-1
personal injury from laser beam, prevention of, 1.2-1
personal injury from radiation, prevention

of, 1.2-2
radiation, 1.2-2
Laser Power Supply
buck-boost transformer jumpers and connections, table, A.3-4
configuration criteria for ac line input, table, A.3-4
configuring Laser Power Supply Buck Boost Transformer at instrument installation, 3.2-4
function, 2.2-4
location, illustration, 2.1-3
voltages monitored by I/O card, 2.4-7
Laser Power Supply Buck Boost Transformer
configuring at instrument installation, 3.2-4
Laser Power Supply buck-boost transformer jumpers and connections, table, A.3-4
latex aspiration modes
Diluter flow, 2.11-8
latex calibration
CBC. *See* calibration, CBC
diff. *See* calibration, VCS
retic. *See* calibration, VCS
LATRON control
calibration and verification limits, A.1-8
LATRON primer
background limits, A.1-8
leakage current specifications
computers, such as DMS, 2.1-5
instrument, 2.1-5
left stack. *See* unloading bay
lens block
cleaning procedure, 4.14-1
location, illustration, 2.13-3
LESS THAN 1 MEGABYTE LEFT ON DRIVE C, 7.1-18
lift. *See* load elevator; unload elevator
light scatter (LS or S)
VCS measurement, description, 2.13-1
limits and tolerances. *See* specifications
linear light scatter (LLS)
VCS measurement, description, 2.13-2
load elevator
location, illustration, 2.9-3
load elevator down sensor
action to change state, 4.43-3
function and location reference, 4.43-3
function, type, and location reference, 2.9-2
location, illustration, 2.9-3
LOAD ELEVATOR FAILURE, 7.1-18
load elevator motor
function, type, and location reference, 2.9-1
location, illustration, 2.9-4
replacement procedure, 4.36-1
load stack empty sensor
action to change state, 4.43-2
function and location reference, 4.43-2
function, type, and location reference, 2.9-3
location, illustration, 2.9-3, 2.9-4
LOAD STACK NOT EMPTY, 7.1-18
load stack. *See* loading bay
loading bay
function, 2.9-1
location, illustration, 2.9-3, 2.9-4
low vacuum
acceptable range, A.1-5
adjustment procedure, 4.25-5
distribution, 2.5-3
regulator. *See* RG1 (low vacuum regulator)
LOW VACUUM OUT OF RANGE, 7.1-18
LOWER DOOR OPEN, 7.1-18
LS (light scatter or S)
VCS measurement, description, 2.13-1
LS (S or light scatter)
troubleshooting latex calibration problems, 7.4-1
LS offset voltage
acceptable limits, A.1-8
measuring at instrument installation, 3.7-1
measuring, procedure, 4.23-3
LS Preamp 5 module
block diagram, 2.13-7
function, 2.13-6
function of the Diff/Retic Gain Select circuitry, 2.13-7
inputs/outputs, 2.13-8
location, illustration, 2.13-3
LS Offset voltage measurement, 2.13-7
LS Preamp module
routes pulses to VCS PROCESSOR card, 2.4-9
LS sensor
location, illustration, 2.13-3
LV (solenoids)
location references, table, A.5-3
table of functions and location references, 4.26-1
See also solenoids
LY%
verifying reproducibility in the Primary mode, 4.5-1

verifying reproducibility in the Secondary mode, 4.5-2
LY% and LY#
part of reported WBC differential, 2.1-1
See also diff parameters
lymphocytes. *See* LY
LYSE OUT, 7.1-18
LYSE TRIG (lyse trigger) test point
location/function, 2.4-4
lytic reagent. *See* CBC lytic reagent; diff lytic reagent

M

M1. *See* rocker bed motor
M2. *See* cassette index motor
Main Diluter module
component locations, A.5-8, A.5-9
component part numbers, illustrated parts list, 8.2-37
component part numbers, master parts list, 8.1-11
location, illustration, 2.1-3
main power switch
See POWER switch
Main Unit
cable connections, illustration, 3.3-1
dimensions, 3.1-1
fan and vent locations, 3.1-2
left-side view, main components, 2.1-4
rear view, main components, 2.1-3
right-side view, main components, 2.1-3
with Autoloader module, front view, main components, 2.1-2
with Rotary Cap-Pierce module, front view, main components, 2.1-2
manifolds
location references, A.5-3
manual, 1.1-1
abbreviations used in, ABBREVIATIONS-1
conventions used, 1.1-5
for servicing the DMS, 1.1-2
intended audience, 1.1-2
numbering format, 1.1-4
obtaining online version, 1.1-1
organization, 1.1-3
reference designators used in, ABBREVIATIONS-1
scope, 1.1-1
special headings defined, 1.1-4
manuals, customer
part numbers, 1.1-1
MC1 (diff mixing chamber)
function, A.5-3
location, illustration, A.5-9
MCV
method used for determining, 2.12-1
verifying reproducibility in the Primary mode, 4.5-1
verifying reproducibility in the Secondary mode, 4.5-2
voting criteria, 2.4-13
MEMORY ERROR, 7.1-18
meniscus
reading correctly, illustration, 4.16-5, 4.19-2
menu trees, software. *See* software menu trees
MF1
function, A.5-3
MF3
function, A.5-3
location, illustration, A.5-7
MF5
function, A.5-3
location, illustration, A.5-10
MF6
function, A.5-3
location, illustration, A.5-10
MF7
function, A.5-3
location, illustration, A.5-10
MF8
function, A.5-3
MF10
function, A.5-3
location, illustration, A.5-9
MF11
function, A.5-3
location, illustration, A.5-9
MF14
function, A.5-3
location, illustration, A.5-9
MF15
function, A.5-4
location, illustration, A.5-10
MF17
function, A.5-4
location, illustration, A.5-9
Mixing module
component locations, A.5-9, A.5-10

component part numbers, illustrated parts list, 8.2-7, 8.2-9, 8.2-11
component part numbers, master parts list, 8.1-15
location, illustration, 2.1-3
mixing motor
location, illustration, A.5-10
MO%
verifying reproducibility in the Primary mode, 4.5-1
verifying reproducibility in the Secondary mode, 4.5-2
MO% and MO#
part of reported WBC differential, 2.1-1
See also diff parameters
mode-to-mode
calibration procedure, 4.8-1
comparison limits, A.1-4
monocytes. *See* MO
motors
B1 (load elevator motor). *See* load elevator motor
B2 (unload elevator motor). *See* unload elevator motor
cassette index. *See* cassette index motor
load elevator. *See* load elevator motor
mixing. *See* mixing motor
rocker bed. *See* rocker bed motor
unload elevator. *See* unload elevator motor
MPV
method used for determining, 2.12-1
verifying reproducibility in the Primary mode, 4.5-1
verifying reproducibility in the Secondary mode, 4.5-2
voting criteria, 2.4-13
MULT. INTER. WHILE RECEIVING DATA, 7.1-19
MULTIPLE ERRORS, 7.1-19

N

NE%
verifying reproducibility in the Primary mode, 4.5-1
verifying reproducibility in the Secondary mode, 4.5-2
NE% and NE#
part of reported WBC differential, 2.1-1
See also. diff parameters
needle
adjusting the position of where it penetrates the tube stopper, 4.41-1
replacement procedure, Autoloader module, 4.32-1
replacement procedure, Rotary Cap-Pierce module, 4.32-5
needle assembly
function, 2.8-1, 2.9-1
location, illustration, 2.8-2, 2.9-3, 2.9-4
needle-drive cylinder
adjusting to achieve optimal horizontal tube-piercing position, 4.41-2
location, illustration, Autoloader module (CL6), 2.9-4
location, illustration, Rotary Cap-Pierce module (CL5), 2.8-2
needle forward sensor
action to change state, Autoloader module (S1), 4.43-2
action to change state, Rotary Cap-Pierce module (U2), 4.43-5
adjustment, 4.44-1
function and location reference, Autoloader module (S1), 4.43-2
function and location reference, Rotary Cap-Pierce module (U2), 4.43-5
function, type, and location reference, Autoloader module (S1), 2.9-2
function, type, and location reference, Rotary Cap-Pierce module (U2), 2.8-2
location, illustration, Autoloader module (S1), 2.9-4
location, illustration, Rotary Cap-Pierce module (U2), 2.8-2
orientation on needle-drive cylinder, illustration, 4.44-1
NEEDLE FORWARD SENSOR ERROR, 7.1-19
needle home sensor
action to change state, Autoloader module (S0), 4.43-2
action to change state, Rotary Cap-Pierce module (U1), 4.43-5
adjustment, 4.44-1
function and location reference, Autoloader module (S0), 4.43-2
function and location reference, Rotary Cap-Pierce module (U1), 4.43-5
function, type, and location reference, Autoloader module (S0), 2.9-2

function, type, and location reference, Rotary Cap-Pierce module (U1), 2.8-2
location, illustration, Autoloader module (S0), 2.9-4
location, illustration, Rotary Cap-Pierce module (U1), 2.8-2
orientation on needle-drive cylinder, illustration, 4.44-1
NEEDLE HOME SENSOR ERROR, 7.1-19
needle vent chamber
function, A.5-5
location, illustration, A.5-10
neutrophils *See* NE
NO PARAMETER SELECTED, 7.1-19
noise, electronic. *See* electronic noise
normal position sensor
action to change state, 4.43-6
function and location reference, 4.43-6
function, type, and location reference, 2.8-2
location on code wheel, illustration, 4.31-2
Note
heading defined, 1.1-4

O

online service manuals, obtaining, 1.1-1
OP (opacity)
VCS measurement, description, 2.13-2
opacity (OP)
VCS measurement, description, 2.13-2
options and upgrade kits
part numbers, 8.1-16
overflow chamber
function, A.5-6
location, illustration, A.5-7
oversized pos. sensor
action to change state, 4.43-6
function and location reference, 4.43-6
function, type, and location reference, 2.8-2
oversized position sensor
location on code wheel, illustration, 4.31-2

P

PAK LYSE. *See* diff lytic reagent; Erythrolyse II reagent
PAK OUT, 7.1-19
PAK PRESERVE. *See* diff leukocyte preservative; StabiLyse reagent
parameters reported
CBC, 2.1-1
for research use only, 2.1-1
reticulocyte, 2.1-1
WBC differential, 2.1-1
part numbers
customer manuals, 1.1-1
DMS Configuration Listing for STKS and MAXM Series Systems, 1.1-2
HmX ANALYZER RECOMMENDED MAINTENANCE SCHEDULE, 5.1-1
HmX Instrument Reference Form, 5.1-1
instrument components. *See* part numbers, illustrated parts lists; part numbers, master parts lists
Service Resource Kit, 1.1-1
System Verification Procedure form (SVP), 5.1-1
part numbers, illustrated parts lists
Analyzer module, 8.2-43
Autoloader
module, 8.2-25, 8.2-27, 8.2-29, 8.2-31
BSV module, 8.2-13, 8.2-15, 8.2-17
CBC module, 8.2-3, 8.2-5
electrical connectors, 8.2-46
Electronic Power Supply, 8.2-39
Main Diluter module, 8.2-37
Mixing module, 8.2-7, 8.2-9, 8.2-11
Pneumatic Power Supply, 8.2-41
Pump module, 8.2-19
Rotary Cap-Pierce module, 8.2-21, 8.2-23
Triple Transducer module (TTM), 8.2-33, 8.2-35
wire harness components, 8.2-45
part numbers, master parts lists
accessories, instrument, 8.1-1
Autoloader module, 8.1-2
bar-code system components, 8.1-4
BSV module, 8.1-5
CBC module, 8.1-7
circuit cards, 8.1-8
covers and doors, 8.1-9
Diluter hardware, miscellaneous, 8.1-12
interconnect cables, 8.1-10
Main Diluter module, 8.1-11
Mixing module, 8.1-15
options and upgrade kits, 8.1-16
pickup tubes and sensors, 8.1-16
power supplies, 8.1-17
Pump module, 8.1-18

Rotary Cap-Pierce module, 8.1-19
shielded reagent lines, 8.1-21
software, 8.1-21
tools and supplies, 8.1-22
Triple Transducer module, 8.1-23
tubing, 8.1-25
PARTIAL ASPIRATION, 7.1-20
parts lists
master, 8.1-1
PATIENT ID REQUIRED FOR PROCESSING, 7.1-20
PC1, 7.2-1
PC2, 7.2-2
Peltier Controller card
block diagram, 2.6-3
connector and LED locations, illustration, A.2-6
connectors and LED functions, table, A.2-6
function, A.5-1
location, illustration, A.5-7
Peltier module
description, 2.6-2
function, 2.6-3
location, illustration, A.5-7
signals enabled by the I/O card, 2.4-7
See also Peltier Controller card
pickup tubes and sensors
part numbers, 8.1-16
pierce position sensor
action to change state, 4.43-3
function and location reference, 4.43-3
function, type, and location reference, 2.9-3
location, illustration, 2.9-4
pinch valves
deactivator clips, removal, 3.2-2
location references, A.5-4
with inconspicuous deactivator clips, table of, 3.2-2
platelet count. *See* Plt
platelet. *See* Plt
PLB1 (Peltier module)
location, illustration, A.5-7
See also Peltier module
Plt
checking carryover in the Primary mode, 4.6-1
histogram development, 2.4-10
histogram particle accumulation, 2.4-10
method used for determining, 2.12-1
reports 0.00; software download not successful, 7.5-1
test point for measuring noise level, 2.4-13
verifying reproducibility in the Primary mode, 4.5-1
verifying reproducibility in the Secondary mode, 4.5-2
voting criteria, 2.4-13
PM1 (CBC lytic reagent pump)
function, A.5-4
location, illustration, A.5-7
See also CBC lytic reagent pumps
PM2 (CBC lytic reagent pump)
function, A.5-4
location, illustration, A.5-7
See also CBC lytic reagent pumps
PM3 (air pump)
function, A.5-4
location, illustration, A.5-6
PM4 (aspiration pump, Primary mode)
function, A.5-4
location, illustration, A.5-6
See also aspiration pump, Primary mode
PM5 (aspiration pump, Secondary mode)
function, A.5-4
location, illustration, A.5-6
PM6 (Erythrolyse II reagent pumps)
function, A.5-4
location, illustration, A.5-10
See also Erythrolyse II reagent pumps
PM7 (Erythrolyse II reagent pumps)
function, A.5-4
location, illustration, A.5-10
See also Erythrolyse II reagent pumps
PM8 (backwash pump)
function, A.5-4
location, illustration, A.5-9
PM9 (WBC diluent dispenser)
function, A.5-4
location, illustration, A.5-9
See also WBC diluent dispenser
PM10 (cleaning agent pump)
function, A.5-4
location, illustration, A.5-9
PM11 (RBC diluent dispenser)
function, A.5-4
location, illustration, A.5-9
See also RBC diluent dispenser
PM12 (StabiLyse reagent pump)
function, A.5-4
location, illustration, A.5-9
See also StabiLyse reagent pump
Pneumatic Monitor card

block diagram, 2.5-4
component locations, illustration, A.2-7
connector, A.2-7
function, 2.5-4
hazard of adjusting the voltage potentiometers, 4.25-1
location, illustration, 2.1-3, A.5-9
test point voltages for pneumatic readings, conversion table, A.2-8
used for monitoring 30-psi pressure adjustment, 4.25-3
used for monitoring 60-psi pressure adjustment, 4.25-1
used for monitoring low vacuum adjustment, 4.25-5
used for monitoring sample-pressure adjustment, 4.25-4
used for monitoring sheath-pressure adjustment, 4.25-3
used for verifying high vacuum, 4.25-4
Pneumatic Power Supply
Buck-Boost Transformer Terminal card jumpers and connections, table, A.3-4
component part numbers, illustrated parts list, 8.2-41
compressor bleed, monitoring sequence, 2.5-5
configuration criteria for ac line input, table, A.3-4
configuring Pneumatic Power Supply Buck-Boost Transformer Terminal card at instrument installation, 3.2-3
description, 2.5-1
function, 2.5-1
fuse, 2.5-2
houses intake fan, 3.1-2
location, illustration, 2.1-3, 2.1-4
main components, 2.5-1
main components, illustration, 2.5-1
replacement procedure, 4.24-1
shipping pins, illustration, 3.2-3
shipping pins, removal, 3.2-3
voltage configurations, 2.5-2
Pneumatic Power Supply Buck-Boost Transformer Terminal card
configuring at instrument installation, 3.2-3
jumpers and connections, table, A.3-4
Pneumatic system
compressor bleed monitoring sequence, 2.5-5
function, 2.5-1
Pneumatic Monitor card. *See* Pneumatic Monitor card
Pneumatic Power Supply. *See* Pneumatic Power Supply
pneumatic readings converted to voltages, table, A.2-8
pressure and vacuum adjustments, 4.25-1
pressure and vacuum distribution and monitoring, 2.5-2
power
consumption, typical, A.1-6
input specifications, A.1-5
power down/power up procedures, 4.1-2
power supplies
electronic. *See* Electronic Power Supply
laser. *See* Laser Power Supply
part numbers, 8.1-17
pneumatic. *See* Pneumatic Power Supply
RF. *See* RF Power Supply
POWER switch
function, 2.2-1
location, 2.1-3
precautions, safety, 1.2-1
precision. *See* reproducibility
preinstallation checks, 3.1-1
pressure tank
function, 2.5-2
location, illustration, 2.5-2
pressures
30 psi. *See* 30-psi pressure
60 psi. *See* 60-psi pressure
sample. *See* sample pressure
sheath. *See* sheath pressure
PREVIOUS SAMPLE NOT XMITTED TO HOST, 7.1-20
Primary mode
checking carryover, 4.6-1
determining initial calibration factors, 4.7-1
Diluter flow, 2.11-4
to Secondary comparison limits, A.1-4
verifying operation at instrument installation (on instruments with a Rotary Cap-Pierce module), 3.6-2
verifying operation at instrument installation (on instruments with an Autoloader module), 3.6-3
verifying reproducibility, 4.5-1

verifying reproducibility and carryover at instrument installation, 3.7-2
See also aspiration pump, Primary mode
Printer, Graphic
cable connections, illustration, 3.3-1
fan location, 3.1-2
installation procedure, reference, 3.9-1
probe
aspirator. *See* aspirator tip
bleach. *See* bleach probe
procedures
activating the DMS service options, 4.2-1
adjustment. *See* adjustment procedures
Bar-Code Reader Decoder card configuration, 4.38-1
BSV disassembly, 4.29-1
carryover, 4.6-1
CBC calibration. *See* calibration, CBC
checking electronic noise levels, 4.12-1, 7.3-1
cleaning. *See* cleaning procedures
configuring the instrument for cyanide-free reagents, 3.10-1
CPU RAM clearance, 4.1-3
installation, instrument. *See* installation procedures, instrument
instrument reset, 4.1-2
measuring the LS offset voltage, 4.23-3
power down/power up, 4.1-2
removal. *See* removal procedures
replacement. *See* replacement procedures
reproducibility, 4.5-1
sensor and switch checks, 4.43-1
solenoid inspection, 4.26-1
system verification, 5.1-1
using the service disk 2 software, 4.2-3
using the service disk 2 utilities, 4.2-10
VCS calibration. *See* calibration, VCS
VCS optimization. *See* VCS optimization
whole blood verification, 4.3-1
Pump module
component locations, A.5-10
component part numbers, illustrated parts list, 8.2-19
component part numbers, master parts list, 8.1-18
location, illustration, 2.1-2
pumps
diaphragm style, adjustment, illustration, 4.16-5
PM1 (CBC lytic reagent). *See* CBC lytic reagent pumps
PM2 (CBC lytic reagent). *See* CBC lytic reagent pumps
PM4 (aspiration pump, Primary mode). *See* aspiration pump, Primary mode
PM6 (Erythrolyse II reagent pump). *See* Erythrolyse II reagent pumps
PM7 (Erythrolyse II reagent pump). *See* Erythrolyse II reagent pumps
PM9 (WBC diluent dispenser). *See* WBC diluent dispenser
PM11 (RBC diluent dispenser). *See* RBC diluent dispenser
PM12 (StabiLyse reagent pump). *See* StabiLyse reagent pump

Q

Q1 (bar-code detector sensor). *See* bar-code detector sensor
Q2 (hand detector sensor). *See* hand detector
QD1F, location, illustration, A.5-8
QD1M, location, illustration, A.5-8
QD2F, location, illustration, A.5-8
QD2M, location, illustration, A.5-6
QD3F, location, illustration, A.5-8
QD3M, location, illustration, A.5-6
QD4F, location, illustration, A.5-8
QD5F, location, illustration, A.5-8
QD5M, location, illustration, A.5-10
QD6F, location, illustration, A.5-8
QD6M, location, illustration, A.5-9
QD7, location, illustration, A.5-9
QD8, location, illustration, A.5-9
QD9, location, illustration, A.5-9
QD10, location, illustration, A.5-9
QD11, location, illustration, A.5-9
quench. *See* StabiLyse reagent

R

R/W PREAMP card
block diagram, 2.4-11
function, 2.4-14
inputs/outputs, 2.4-14
location, illustration, 2.4-1
role in histogram development, 2.4-10
sends pulses to the R/W/PROC card, 2.4-10
supplies aperture current to apertures, 2.12-1
R/W/P PROC card
block diagram, 2.4-11

function, 2.4-9
inputs/outputs, 2.4-13
location, illustration, 2.4-1
RBC, WBC, Plt test points location/function, 2.4-13
role in histogram development, 2.4-10
radiation, laser
hazards, 1.2-2
RAM Timer card
function/description, 2.4-3
jumper locations, illustration, A.2-9
jumper settings, A.2-9
RAW DATA SPACE FULL-CAPTURE OFF, 7.1-21
RAW DATA SWITCH OFF, 7.1-21
RAW DATA TRANSMISSION ERROR, 7.1-21
RAW FILE TOO LARGE, 7.1-21
RB1 (rinse block)
function, A.5-5
location, illustration, A.5-6
RBC
checking carryover in the Primary mode, 4.6-1
counting sequences, 2.4-10
histogram development, 2.4-10
histogram particle accumulation, 2.4-10
method used for determining, 2.12-1
reports 0.00;software download not successful, 7.5-1
test point for measuring noise level, 2.4-13
verifying reproducibility in the Primary mode, 4.5-1
verifying reproducibility in the Secondary mode, 4.5-2
voting criteria, 2.4-10
RBC AND WBC BATH OVERFLOW, 7.1-21
RBC bath
function, A.5-2
location, illustration, A.5-7
replacement, 4.28-1
See also Aperture module and bath assembly
RBC BATH OVERFLOW, 7.1-21
RBC diluent dispenser
function, A.5-4
location, illustration, A.5-9
measuring volume dispensed by volume, 4.19-1
measuring volume dispensed by weight, 4.19-2
volume adjustment procedure, 4.19-1
volume tolerances, A.1-10
RBC vacuum isolator chamber
function, A.5-6
location, illustration, A.5-7
RBC VALUE MUST BE > 0 AND < OR EQUAL TO 9.99, 7.1-21
RBC VALUE MUST BE > 0 AND < OR EQUAL TO 999, 7.1-21
RCP Junction card
block diagram, 2.7-3
function, 2.8-4
inputs/outputs, 2.8-4
location, illustration, 2.8-2
RDW
verifying reproducibility in the Primary mode, 4.5-1
verifying reproducibility in the Secondary mode, 4.5-2
voting criteria, 2.4-13
reagent lines, shielded. *See* shielded reagent lines
Reagent system
configuring for cyanide-free reagents, 3.10-1
enabling/disabling the level sensors, 3.5-1
precautions for ensuring correct reagent and waste connections, 3.3-4
precautions for preventing introduction of electronic noise, 3.3-3
priming reagents, 3.5-1
reagent and drain connections, 3.3-3
reagent and drain connections, illustration, 3.3-3
reagent input and distribution, 2.6-1
reagent monitoring, 2.6-1
reagents used, 2.6-1
setup at instrument installation, 3.5-1
temperature control of Erythrolyse II reagent, 2.6-2
temperature control of mixing chamber rinse diluent, 2.6-2
waste drainage requirements, 3.1-3
waste removal and monitoring, 2.6-5
See also Fluid Detector/Ram Pressure card; Peltier module
RED A/I/V OUT OF RANGE, 7.1-21
red blood cell count. *See* RBC
red blood cell. *See* RBC
reference designators
used in this manual, ABBREVIATIONS-1
regulators
60-psi pressure. *See* 60-psi pressure regulator
RG1 (low vacuum). *See* low vacuum regulator

RG2 (30-psi pressure). *See* 30-psi pressure regulator
RG3 (sheath pressure). *See* sheath-pressure regulator
RG4 (sample pressure). *See* sample-pressure regulator
removal procedures
Autoloader module, 4.34-1
rocker bed, 4.35-1
replacement procedures
Aperture module and bath assembly, 4.28-1
BSV, 4.29-1
BSV actuator, 4.29-4
carousel motor, 4.30-1
Electronic Power Supply, 4.22-1
elevator stepper motors, 4.36-1
Erythrolyse II reagent pumps, 4.16-8
Hgb Preamp module, 4.27-1
needle, Autoloader module, 4.32-1
needle, Rotary Cap-Pierce module, 4.32-5
Pneumatic Power Supply, 4.24-1
solenoids, 4.26-6
tube available sensor, 4.37-1
reproducibility
acceptable limits, A.1-3
checking, parameter requirements of specimens used, A.1-3
procedures, 4.5-1
REPRODUCIBILITY IS ACTIVE, 7.1-21
REPRODUCIBILITY TABLE FULL, 7.1-21
reproducibility, Primary mode
acceptable limits, A.1-4
checking, procedure, 4.5-1
verifying at instrument installation, 3.7-2
reproducibility, Retic mode
acceptable limits, A.1-4
checking, procedure, 4.5-3
verifying at instrument installation, 3.7-3
reproducibility, Secondary mode
acceptable limits, A.1-4
checking, procedure, 4.5-2
verifying at instrument installation, 3.7-2
reset procedure, 4.1-2
RET% and RET#
reticulocyte parameters reported by instrument, 2.1-1
See also retic parameters
retic latex calibration. *See* calibration, VCS
Retic mode
checking carryover, 4.6-2
verifying reproducibility, 4.5-3
verifying reproducibility and carryover at instrument installation, 3.7-3
retic parameter
checking carryover, 4.6-2
noise checks, 4.12-1
verifying reproducibility, 4.5-3
retic parameters
method used for determining, 2.13-1
reported by instrument, 2.1-1
See also VCS technology
RETIC VOLTAGE ERROR [XX.XX], 7.1-22
Reticulocyte mode
Diluter flow, 2.11-8
reticulocytes. *See* RET; retic
RETRIES EXCEEDED IN DILUTER DWNLD, 7.1-22
RETRIES FAILED 196CODE DWNLD TO 376, 7.1-22
RF (C or conductivity)
troubleshooting latex calibration problems, 7.4-1
VCS measurement, description, 2.13-1
RF Detector Preamp card
300 Vac input controlled by DILUTER INTERFACE card, 2.4-4
adjustment procedures, 4.11-1
function, 2.13-5
inputs/outputs, 2.13-6
location, illustration, 2.13-3
receives voltage from RF Power Supply card, 2.2-4
routes pulses to VCS PROCESSOR card, 2.4-9
signal flow, illustration, 2.13-6
signals monitored by DILUTER INTERFACE card, 2.4-4
supplies DC and RF currents, 2.13-2
RF Power Supply
components, 2.2-4
function, 2.2-4
location, illustration, 2.2-3
RF Power Supply card
function, 2.2-4
RF VOLTAGE LOW, 7.1-22
RF/DC Detector Preamp card
possible cause of an *FC* error, 7.2-1
RG1 (low vacuum regulator)
function, A.5-5
location, illustration, A.5-9
RG2 (30-psi pressure regulator)
function, A.5-5

location, illustration, A.5-9
RG3 (sheath-pressure regulator)
function, A.5-5
location, illustration, A.5-9
RG4 (sample-pressure regulator)
function, A.5-5
location, illustration, A.5-9
right stack. *See* loading bay
rinse block
adjustment procedure, 4.33-1
arm sensor. *See* rinse block arm sensor
avoiding physical damage while adjusting, 4.33-1
rinse block arm sensor
action to change state, Autoloader module, 4.43-1
action to change state, Rotary Cap-Pierce module, 4.43-5
function and location reference, Autoloader module, 4.43-1
function and location reference, Rotary Cap-Pierce module, 4.43-5
RINSE BLOCK ERROR, 7.1-22
RLS (rotated light scatter)
VCS measurement, description, 2.13-2
rocker bed
function, 2.9-1
function of the adjustable linkage, 4.40-1
linkage adjustment procedure, 4.40-1
linkage adjustment, illustration, 4.40-2
location, illustration, 2.9-3
position sensors. *See* horizontal position sensor; pierce position sensor
removal procedure, 4.35-1
Rocker Bed Interface card
block diagram, 2.7-2
connector locations, illustration, A.2-10
connectors, table, A.2-10
function, 2.9-8
inputs/outputs, 2.9-9
location, illustration, 2.9-4
rocker bed motor
function, type, and location reference, 2.9-2
location, illustration, 2.9-4
ROCKER BED NOT EMPTY, 7.1-22
Rotary Cap-Pierce module
block diagram of its associated circuit cards, 2.7-3
carousel assembly. *See* carousel assembly
carousel position indicated by LEDs on Sample Handler card, 2.7-4
component part numbers, illustrated parts list, 8.2-21, 8.2-23
component part numbers, master parts list, 8.1-19
description, 2.8-1
ensuring Sample Handler card is configured for, 2.7-4
function, 2.8-1
location, illustration, 2.1-2
main component descriptions, table of, 2.8-1
main component locations, illustration, 2.8-2
needle replacement procedure, 4.32-5
operation, summary, 2.8-3
preventing damage to during software download, 2.7-4
RCP Junction card. *See* RCP Junction card
sensor and switch functions and location references, table of, 4.43-5
rotated light scatter (RLS)
VCS measurement, description, 2.13-2
RWP PROC card
component locations, illustration, A.2-11
jumper settings, table, A.2-11
test points functions, table, A.2-11

S

S (light scatter or LS)
troubleshooting latex calibration problems, 7.4-1
VCS measurement, description, 2.13-1
S0 (needle home sensor). *See* needle home sensor
S1 (needle forward sensor). *See* needle forward sensor
S2 (cassette position 1 sensor). *See* cassette position 1 sensor
S2-whole blood (whole blood switch). *See* whole blood switch
S3-backwash (backwash safety sensor). *See* backwash safety sensor
S3 (cassette position 2 sensor). *See* cassette position 2 sensor
S4 (rinse block arm sensor). *See* rinse block arm sensor
S4-stop (STOP switch). *See* STOP switch
S5 (door interlock, Autoloader module). *See* door interlock

S5-tank (sheath tank sensor). *See* sheath tank sensor
S6 (unload elevator down sensor). *See* unload elevator down sensor
S7 (tube available sensor). *See* tube available sensor
S8 (load elevator down sensor). *See* load elevator down sensor
S9 (full cass index rotation sensor). *See* full cass index rotation sensor
S10 (tube ram sensor) *See* tube ram sensor
S11 (unload stack full sensor). *See* unload stack full sensor
S12 (cassette position 0 sensor). *See* cassette position 0 sensor
S13 (cassette position 3 sensor). *See* cassette position 3 sensor
S14 (tube forward sensor). *See* tube forward sensor
S15 (load stack empty sensor). *See* load stack empty sensor
S16 (pierce position sensor). *See* pierce position sensor
S17 (horizontal position sensor). *See* horizontal position sensor
S18 (door interlock, Rotary Cap-Pierce module). *See* door interlock
safety precautions, 1.2-1
  biological, 1.2-4
  electronic, 1.2-4
  laser beam, 1.2-1
  laser radiation, 1.2-2
  troubleshooting, 1.2-5
Sample Analysis system. *See* CBC technology; VCS technology
Sample Handler
  card. *See* Sample Handler card
  module. *See* Autoloader module; Rotary Cap-Pierce module
SAMPLE HANDLER BARCODE SENSOR ERROR, 7.1-23
Sample Handler card
  acceptable blood/bubble detector voltages, A.1-9
  avoiding a short circuit on when aligning the code wheel, 4.31-1
  component locations, illustration, A.2-12
  connectors, table, A.2-12
  controls solenoids in the Sample Handler module, 2.11-1
  ensuring configuration matches Sample Handler on instrument, 2.7-4
  function, 2.7-1
  inputs/outputs, 2.7-5
  jumper settings, table, A.2-12
  LED functions, 2.7-1
  LED functions, table, A.2-13
  LED responses during download, 2.7-3
  LED responses during power up, 2.7-1
  LED responses to the carousel position in the Rotary Cap-Pierce module, 2.7-4
  LEDs response to a power fluctuation, 2.7-4
  location, illustration, 2.1-4
  provides hazard control for Sample Handler module during software download, 2.7-4
  test points and adjustments for the blood/bubble detectors, A.2-12
  with Autoloader module, block diagram, 2.7-2
  with Rotary Cap-Pierce module, block diagram, 2.7-3
SAMPLE HANDLER COMM. FAILURE, 7.1-23
SAMPLE HANDLER COMMUNICATION ERROR, 7.1-23
SAMPLE HANDLER HAND DETECT ERROR, 7.1-23
SAMPLE HANDLER NOT OPERATIONAL, 7.1-23
SAMPLE HANDLER SENSOR 16 ERROR, 7.1-23
SAMPLE HANDLER SENSOR 17 ERROR, 7.1-23
Sample Handler system. *See* Autoloader module; Autosensor Test card; Rotary Cap-Pierce module; Sample Handler card
SAMPLE HANDLER TIMEOUT ERROR, 7.1-23
SAMPLE NOT TRANSMITTED TO HOST, 7.1-24
sample pressure
  adjustment procedure, 4.10-1
  distribution, 2.5-3
  function, 2.13-4
  initial adjustment procedure, 4.25-4
  See also diff pressure
sample-pressure regulator
  function, A.5-5
  location, illustration, A.5-9
Sample Processing system. *See* Diluter
S-CAL calibration
  performed by customer at instrument installation, 3.7-4
scanner, bar-code. *See* bar-code scanner
schematics, engineering. *See* engineering schematics
SEC CBC CALIBRATION TABLE FULL, 7.1-24
Secondary mode
  checking carryover, 4.6-2
  determining calibration factors, 4.8-1
  Diluter flow, 2.11-7

to Primary mode calibration, verifying at instrument installation, 3.7-3
to Primary mode comparison limits, A.1-4
verifying operation at instrument installation, 3.6-5
verifying reproducibility, 4.5-2
verifying reproducibility and carryover at instrument installation, 3.7-2
SEND TO INSTRUMENT FAILED - 196CODE, 7.1-24
sensors
ambient temperature. *See* ambient temperature sensor
checking procedure, 4.43-1
DS1 (hand detector). *See* hand detector sensor
DS2 (bar-code detector). *See* bar-code detector sensor
FD3 (Erythrolyse reagent). *See* Erythrolyse (reagent) sensor
FD4 (Stabilyse reagent). *See* Stabilyse (reagent) sensor
FD5 (CBC lyse). *See* CBC lyse sensor
FD6 (diluent). *See* diluent sensor
FD7 (cleaner). *See* cleaner sensor
in instruments with Autoloader module, table, 4.43-1
in instruments with Rotary Cap-Pierce module, table, 4.43-5
Q1 (bar-code detector). *See* bar-code detector sensor
Q2 (hand detector). *See* hand detector sensor
S0 (needle home). *See* needle home sensor
S1 (needle forward). *See* needle forward sensor
S2 (cassette position 1). *See* cassette position 1 sensor
S3-backwash (backwash safety). *See* backwash safety sensor
S3 (cassette position 2). *See* cassette position 2 sensor
S4 (rinse block arm). *See* rinse block arm sensor
S5 (door interlock, Autoloader module). *See* door interlock
S5-tank (sheath tank). *See* sheath tank sensor
S6 (unload elevator down). *See* unload elevator down sensor
S7 (tube available). *See* tube available sensor
S8 (load elevator down). *See* load elevator down sensor
S9 (full cass index rotation). *See* full cass index rotation sensor
S10 (tube ram). *See* tube ram sensor
S11 (unload stack full). *See* unload stack full sensor
S12 (cassette position 0). *See* cassette position 0 sensor
S13 (cassette position 3). *See* cassette position 3 sensor
S14 (tube forward). *See* tube forward sensor
S15 (load stack empty). *See* load stack empty sensor
S16 (pierce position). *See* pierce position sensor
S17 (horizontal position). *See* horizontal position sensor
S18 (door interlock, Rotary Cap-Pierce module). *See* door interlock
U1 (needle home). *See* needle home sensor
U2 (needle forward). *See* needle forward sensor
U3 (normal position). *See* normal position sensor
U4 (oversized pos.). *See* oversized pos.sensor
U5 (tube available). *See* tube available sensor
waste. *See* waste sensor
See also switches
sensors, level
enabling/disabling, 3.5-1
used for monitoring waste, 2.6-5
See also CBC lyse sensor; cleaner sensor; diluent sensor; Erythrolyse (reagent) sensor; sheath tank sensor; Stabilyse (reagent) sensor; waste sensor
service
disk. *See* service disk
forms provided in manual, 5.1-1
guidelines, 4.1-1
tools and supplies, part numbers, 8.1-22
service disk
activating the DMS service options, 4.2-1
deactivating the DMS service options, 4.2-2
using the software on the service disk 2, 4.2-3
utilities menu tree for the service disk 2, 4.2-9
utilities selections for the service disk 2, descriptions and procedures, 4.2-10
SERVICE REPRODUCIBILITY TABLE FULL, 7.1-24
Service Resource Kit
part number, 1.1-1
SF1 (sweep-flow tank)
function, A.5-5
location, illustration, A.5-7

sheath fluid
function, 2.13-3
sheath pressure
acceptable range, A.1-5
adjustment procedure, 4.10-1, 4.25-3
distribution, 2.5-3
function, 2.13-3
SHEATH PRESSURE OUT OF RANGE, 7.1-24
sheath-pressure regulator
function, A.5-5
location, illustration, A.5-9
sheath tank
function, A.5-5
location, illustration, A.5-6
sensor. *See* sheath tank sensor
SHEATH TANK EMPTY, 7.1-24
sheath tank sensor
action to change state, Autoloader module, 4.43-2
action to change state, Rotary Cap-Pierce module, 4.43-5
function and location reference, Autoloader module, 4.43-2
function and location reference, Rotary Cap-Pierce module, 4.43-5
See also sensors, level
shielded reagent lines
function, 3.3-3
part numbers, 8.1-21
shipping materials
in the Autoloader module, 3.2-5
in the BSV, 3.2-4
in the pinch valves, 3.2-2
in the Pneumatic Power Supply, 3.2-3
in the TTM, 3.2-2
SHUTDOWN PERFORMED PREVIOUSLY, 7.1-24
signal flows, electronic
overviews, 2.3-1
RF Detector Preamp card, 2.13-6
See also block diagrams; individual circuit cards
software
avoiding damage to the Sample Handler module during download, 2.7-4
download not successful; WBC, RBC or Plt report 0.00, 7.5-1
download sequence, 2.4-2
download stops after 376 code, 7.5-1
installation, reference, 3.4-1
part numbers, 8.1-21
See also software menu trees
SOFTWARE AUTOLOADER CHECK FAILED, 7.1-24
software menu trees
Service Disk 2 utilities, A.6-3
software revision 1.0 for instruments with Autoloader module, A.6-2
software revision 1.0 for instruments with Rotary Cap-Pierce module, A.6-1
Solenoid Junction card
block diagram, 2.4-5
solenoids
energizing individually or in groups via a service option, 4.26-1
function in the Diluter, 2.11-1
functions and location references, table, A.5-3
functions of, table, 4.26-1
inspection procedure, 4.26-1
list of, by Diluter module, 2.11-2
location references, 4.26-1
preventing electronic damage to, 4.26-6
preventing physical damage to, 4.26-6
replacement procedure, 4.26-6
special headings
ATTENTION, 1.1-4
CAUTION, 1.1-4
IMPORTANT, 1.1-4
Note, 1.1-4
WARNING, 1.1-4
specifications
calibration tolerances and limits, A.1-1
electrical input, 3.1-1
electronic noise levels, A.1-2
performance (background, carryover, reproducibility, and mode-to-mode comparison), A.1-2
pneumatic tolerances, A.1-5
power input and consumption, A.1-5
pump volumes, A.1-10
temperature and humidity of environment, 3.1-2
timing, A.1-7
VCS optimization limits, A.1-8
ventilation requirements, 3.1-2
voltage ranges, A.1-9
waste drain line length, 3.3-3
waste drainage, 3.1-3
specimen tubes
stoppers' pierce proximity adjustment procedures, 4.41-1
stoppers' pierce proximity adjustment, illustration, 4.41-1

ST1 (sheath tank)
function, A.5-5
location, illustration, A.5-6
Stabilyse (reagent) sensor
action to change state, 4.43-2
function and location reference, 4.43-2
See also sensors, level
StabiLyse reagent
conditions causing a *PC2* error, 7.2-2
instrument setup procedure, 3.5-1
pump. *See* StabiLyse reagent pump
sensor (FD4). *See* Stabilyse (reagent) sensor
tubing connection to instrument, illustration, 3.3-3
StabiLyse reagent pump
function, A.5-4
location, illustration, A.5-9
volume adjustment procedure, 4.16-1
volume optimization work flow, illustration, 4.16-3
StabiLyse reagent. *See* diff leukocyte preservative
stacks. *See* loading bay; unloading bay
STOP switch
action to change state, 4.43-2
function and location reference, 4.43-2
function, type, and location reference, 2.9-2
STOP SWITCH ACTIVATED, 7.1-25
supplies
and tools part numbers, 8.1-22
required at installation, 3.1-3
SVP. *See* system verification procedure
sweep-flow canister. *See* sweep-flow tank
sweep-flow line
function, 2.12-2
sweep-flow tank
function, A.5-5
location, illustration, A.5-7
switches
checking procedure, 4.43-1
DMS line voltage select. *See* DMS line voltage select switch
POWER. *See* POWER switch
S2-whole blood (whole blood). *See* whole blood switch
S4-stop (STOP). *See* STOP switch
SYSTEM BACKGROUND TIME OUT, 7.1-25
System Test
not working correctly, 7.5-2
procedure, 3.6-1
system verification procedure
form, part number, 5.1-1
purpose, tools needed, and directions, 5.1-1
systems
instrument, list of, 2.1-4

T

tanks
pressure. *See* pressure tank
sheath. *See* sheath tank
sweep flow. *See* sweep-flow tank
vacuum. *See* vacuum tank
TEMP: AMBIENT=XX.XX LYSE=XX.XX, 7.1-26
temperature and humidity
requirements, 3.1-2
temperature sensor, ambient. *See* ambient temperature sensor
TEST MODE INTERRUPTED, 7.1-26
TKT.CFG FILE I/O ERROR, 7.1-26
tolerances and limits. *See* specifications
tools
and supplies part numbers, 8.1-22
training, customer
required before instrument installation, 3.1-1
TRANSMIT FAILED - 196 CODE, 7.1-26
TRANSMIT FAILED - 376 CODE, 7.1-26
TRANSMIT FAILED - DILUTER TABLE, 7.1-26
TRANSMIT PORT NOT AVAILABLE, 7.1-26
TRANSMIT TO 376 FAILED - 196 CODE, 7.1-26
Triple Transducer module. *See* TTM
troubleshooting
count ratio problems, 4.9-3
DC, RF, or LS noise, 7.3-1
diff or retic latex calibration problems, 7.4-1
electronic noise on the RF channel, table, 7.3-3
engineering schematics needed, 6.1-1
flow-cell errors, 7.2-1
laser/flow cell alignment problems, 4.15-1
reported instrument problems, 7.5-1
TTM
baseplate shipping screw location, illustration, 3.2-2
component part numbers, illustrated parts list, 8.2-33, 8.2-35
component part numbers, master parts list, 8.1-23
location, illustration, 2.1-3
main components, illustration, 2.13-3
shipping materials, removal, 3.2-2

tube available sensor
action to change state, Autoloader module (S7), 4.43-3
action to change state, Rotary Cap-Pierce module (U5), 4.43-6
function and location reference, Autoloader module (S7), 4.43-3
function and location reference, Rotary Cap-Pierce module (U5), 4.43-6
function, type, and location reference, Autoloader module (S7), 2.9-2
function, type, and location reference, Rotary Cap-Pierce module (U5), 2.8-2
location, illustration, Autoloader module (S7), 2.9-3
location, illustration, Rotary Cap-Pierce module (U5), 2.8-2
replacement procedure, 4.37-1
TUBE AVAILABLE SENSOR ERROR, 7.1-26
tube ejector and tray
function, 2.8-1
location, illustration, 2.8-2
tube forward sensor
action to change state, 4.43-3
function and location reference, 4.43-3
function, type, and location reference, 2.9-3, 2.9-4
tube ram cylinder
location, illustration, 2.9-4
tube ram sensor
action to change state, 4.43-3
function and location reference, 4.43-3
function, type, and location reference, 2.9-3
location, illustration, 2.9-4
tube return cylinder
location, illustration, 2.9-4
tubes
pickup and sensors, part numbers, 8.1-16
specimen. *See* specimen tubes
tubing
color coding used in Diluter, 2.11-2
part numbers, 8.1-25
reagent input, illustration, 3.3-3
shielded reagent, part numbers, 8.1-21

U

U1 (needle home sensor). *See* needle home sensor
U2 (needle forward sensor). *See* needle forward sensor
U3 (normal position sensor). *See* normal position sensor
U4 (oversized pos. sensor). *See* oversized pos.sensor
U5 (tube available sensor). *See* tube available sensor
UNABLE TO OPEN/READ 196CODE.HEX, 7.1-27
UNABLE TO OPEN/READ 376CODE.HEX, 7.1-27
UNABLE TO OPEN/READ DILUTER TBL, 7.1-27
UNABLE TO PROCESS REQUEST, 7.1-27
UNIDENTIFIED ERROR [XXXX], 7.1-27
UNIDENTIFIED S44 ERROR, 7.1-27
UNIDENTIFIED S45 ERROR, 7.1-27
UNIDENTIFIED S55 ERROR, 7.1-28
UNIDENTIFIED S57 ERROR, 7.1-28
unload elevator
location, illustration, 2.9-3
unload elevator down sensor
action to change state, 4.43-3
function and location reference, 4.43-3
function, type, and location reference, 2.9-2
location, illustration, 2.9-3
UNLOAD ELEVATOR FAILURE, 7.1-28
unload elevator motor
function, type, and location reference, 2.9-1
location, illustration, 2.9-4
replacement procedure, 4.36-1
UNLOAD STACK FULL, 7.1-28
unload stack full sensor
action to change state, 4.43-2
function and location reference, 4.43-2
function, type, and location reference, 2.9-3
location, illustration, 2.9-3, 2.9-4
unload stack. *See* unloading bay
unloading bay
function, 2.9-1
location, illustration, 2.9-3, 2.9-4
upgrades and options kits
part numbers, 8.1-16

V

V (volume or DC)
troubleshooting latex calibration problems, 7.4-1
VCS measurement, description, 2.13-1
vacuum
high. *See* high vacuum
low. *See* low vacuum
vacuum chamber
function, A.5-5
location, illustration, A.5-9

vacuum tank
function, A.5-6
location, illustration, 2.5-2
valves
pinch. *See* pinch valves
solenoids. *See* solenoids
VC1 (waste chamber)
function, A.5-5
location, illustration, A.5-7
VC2 (bubble trap)
function, A.5-5
location, illustration, A.5-7
VC3 (vent waste chamber)
function, A.5-5
location, illustration, A.5-10
VC4 (needle vent chamber)
function, A.5-5
location, illustration, A.5-10
VC5 (bleach chamber)
function, A.5-5
location, illustration, A.5-9
VC6 (vacuum chamber)
function, A.5-5
location, illustration, A.5-9
VC7 (diff waste chamber)
function, A.5-5
location, illustration, A.5-9
VC8 (overflow chamber)
function, A.5-6
location, illustration, A.5-7
VC9 (vacuum tank)
function, A.5-6
location, illustration, 2.5-2
VC10 (RBC vacuum isolator chamber)
function, A.5-6
location, illustration, A.5-7
VC11 (WBC vacuum isolator chamber)
function, A.5-6
location, illustration, A.5-7
VCS calibration. See calibration, VCS; VCS optimization
VCS flow rate
adjusting at instrument installation, 3.7-2
adjustment procedure, 4.10-1
VCS measurements
conductivity (C or RF), 2.13-1
linear light scatter (LLS), 2.13-2
opacity (OP), 2.13-2
rotated light scatter (RLS), 2.13-2
volume (V or DC), 2.13-1
VCS optimization
adjusting C1 on the RF Detector card, 4.11-2
adjusting the Clog Detector circuit, 4.11-1
adjusting the DC, RF, and LS gains, 4.4-2
adjusting the Erythrolyse II reagent pump and StabiLyse reagent pump volumes, 4.16-1
adjusting the VCS flow rate, 4.10-1
aligning the laser/flow cell, 4.15-1
checking RMS noise levels on the DC, RF, and LS channels, 4.12-1
checking the count ratio, 4.9-3
cleaning the flow cell, 4.13-1
making preliminary checks, 4.9-3
procedure flow, illustration, 4.9-1
procedures, overview, 4.9-1
verifying successful optimization, 4.9-4
See also calibration, VCS
VCS PROCESSOR card
block diagram, 2.4-8
component locations, illustration, A.2-14
function, 2.4-8
inputs/outputs, 2.4-9
jumper setting, A.2-14
location, illustration, 2.4-1
test point function, table, A.2-14
V, C, S test points location/function, 2.4-9
VCS technology
applying, 2.13-2
DC and RF currents, 2.13-2
flow-cell hydraulics, 2.13-3
flow-cell ports and sample and reagent flow, illustration, 2.13-4
hydrodynamically focused cells, illustration, 2.13-4
laser light source, 2.13-2
light scatter path, illustration, 2.13-3
measurements obtained, 2.13-1
parameters reported, 2.1-1, 2.13-1
sensing area, illustration, 2.13-3
temperature control of Erythrolyse II reagent, 2.6-3
temperature range cycles, 2.6-4
temperature range cycles, table of, 2.6-4
test points for measuring noise levels, 2.4-9
See also calibration, VCS; VCS optimization
vent waste chamber
function, A.5-5
location, illustration, A.5-10

ventilation
instrument requirements, 3.1-2
VIP. *See* system verification procedure
voltages
blood/bubble detector cables, acceptable ranges, A.1-9
checks and adjustments, 4.23-1
equivalents for pneumatic readings, table, A.2-8
Hgb blank, acceptable ranges, A.1-9
system, acceptable ranges, A.1-9
volume (V or DC)
VCS measurement, description, 2.13-1
voting criteria
MCV, RDW, Plt and MPV, 2.4-13
RBC and WBC, 2.4-10

W

WARNING
heading defined, 1.1-4
waste
container, neck support bracket installed, 3.3-4
drain line connection to instrument, illustration, 3.3-3
drain line connections, 3.3-3
drainage requirements, 3.1-3
instrument setup procedure, 3.5-1
level sensing, 2.6-5
removal, 2.6-5
sensor. *See* waste sensor
specifications for drain line length, 3.3-3
waste chamber
function, A.5-5
location, illustration, A.5-7
WASTE CONTAINER FULL, 7.1-29
waste sensor
action to change state, Autoloader module, 4.43-1
action to change state, Rotary Cap-Pierce module, 4.43-5
function and location reference, Autoloader module, 4.43-1
function and location reference, Rotary Cap-Pierce module, 4.43-5
See also sensors, level
WATER TRAP DID NOT BLEED [XX.XX], 7.1-29
WBC
checking carryover in the Primary mode, 4.6-1
counting sequences, 2.4-10
histogram development, 2.4-10
histogram particle accumulation, 2.4-10
method used for determining, 2.12-1
reports 0.00; software download not successful, 7.5-1
test point for measuring noise level, 2.4-13
verifying reproducibility in the Primary mode, 4.5-1
verifying reproducibility in the Secondary mode, 4.5-2
voting criteria, 2.4-10
WBC bath
function, A.5-2
location, illustration, A.5-7
replacement, 4.28-1
See also Aperture module and bath assembly
WBC BATH OVERFLOW, 7.1-29
WBC diluent dispenser
function, A.5-4
location, illustration, A.5-9
measuring volume dispensed by volume, 4.19-1
measuring volume dispensed by weight, 4.19-2
volume adjustment procedure, 4.19-1
volume tolerances, A.1-10
WBC vacuum isolator chamber
function, A.5-6
location, illustration, A.5-7
WHITE A/I/V OUT OF RANGE, 7.1-29
white blood cell count. *See* WBC
white blood cell. *See* WBC
whole blood switch
action to change state, Autoloader module, 4.43-1
action to change state, Rotary Cap-Pierce module, 4.43-5
function and location reference, Autoloader module, 4.43-1
function and location reference, Rotary Cap-Pierce module, 4.43-5
WORKLIST ERRORS NOT CLEARED, 7.1-29
WORKLIST FULL, 7.1-29
WRONG DIGIBOARD SOFTWARE, 7.1-29
WRPORT UNAVAIL FOR 376 CODE, 7.1-29

TRADEMARKS

The BECKMAN COULTER logo, 4C PLUS, 5C, ACCUVETTE, COULTER, COULTER CLENZ, Erythrolyse, ISOTON, LATRON, LYSE S, RETIC-C, ReticPrep, S-CAL, SCATTER PAK, and StabiLyse are trademarks of Beckman Couter, Inc.

All other trademarks, service marks, products, or services are trademarks or registered trademarks of their respective holders.