GETINGE

GETINGE 88-SERIES
TECHNICAL MANUAL
502406700

SEV0647139-

Downloaded from www.Manualslib.com manuals search engine

GETINGE

Contents

FOREWORD 6

SAFETY REGULATIONS 7
- Important 7
- In an emergency 7
- Product liability 7
- Isolating device 7

INTRODUCTION 8
- Intended use of the machine 8
- Attention symbols 8
- Residual current device (RCD) 8

Description 9
- General 9
- Control system 9
- Aborting program start 10
- Aborting a running program 10

Schematic diagram 11
- Electric heating 11
- Steam heating 12

Software description and settings 13
- Description 13

Control panel 14
- Display 14
- Program selection buttons 14
- Menu selection buttons 15
- Scrolling in menus and lists 16
- Field editing 16
- Passwords 17

Menu tree 19

PREVENTIVE MAINTENANCE 58
- General 58
- Periodic maintenance 58

Function check 59
- Instruction manual, cable, switch 59
- Filters and valves 59
- Strainer 59
- Controls 59
- Insert for goods 59
- Door 60
- Detergent dosing 60
- Washing system 60
- Temperature check 60
- Dryer 60
- Hoses 60

<Doc_TEC><Doc_502406700><Rel_B><Lang_GB>

Downloaded from www.Manualslib.com manuals search engine

Printer 60
Cooling fans in electrical cabinets 60

Fault indications 61
Handling alarms 61
Alarms 62
Acknowledging a fault code 62

Troubleshooting 63

Repair and adjustment 70
Connecting a PC 70

Connections 71
Fixed scanner 71
Printers 72
Custom FH190SP-24S3-0005 72
Printer configuration 73
Lexmark C524 74
NetCom 75
Connection AGS 76
Connection loader/unloader 77
Termination central dosing 79
Potential free contacts 80

Loading programs to flash memory 81
Loading system programs 81
Load language files 84
Loading a new application into PACS 85
With CS1000 85
Reloading the backup from “flash prom” to PACS 86
Without CS1000 86
Cold start 87
Changing user language 88
With user panel 88
With CS1000 88

Calibration 89
Calibrating PACS conductivity 89
Pressure sensor for circulation pump 92
Temperature sensors - with resistor 94
Temperature sensor - with ice bath and oil bath 96
Differential pressure gauge for dryer 98

Dosing pumps and flow transmitters 101
Calibration of flow transmitters 101

Trim panels 103
Clean side and soiled side 103
Side panels 103

<Doc_TEC><Doc_502406700><Rel_B><Lang_GB>

Downloaded from www.Manualslib.com manuals search engine

GETINGE

Replacing a temperature sensor 104
In wash chamber and dryer 104
In a booster tank 104

Door 105
Position and operation, door switches 105
Adjusting door switches 106
Adjusting DOOR UP safety switch 107
Replacing the door seal 108
Removing the door 109
Adjusting the door closing force 110
Adjusting the door frame 110

Overheat protection 111
Replacing the overheat protection in the booster tank 111
Replacing overheat protection in the main pipe 111

Cleaning the water and steam valve 112
Water valve 112
Steam valve 112

Dryer 113
Changing the filter 113
Fan replacement and checking 113
Check valves to main pipe 113

Conductivity measurement (extra equipment) 114
Function in washing process 114
Measuring range 114
Check the output signal from conductivity meter 114
Setting the cell constant 114
To set the cell constant, proceed as follows: 114

Replacing the main board 115

Replacing the expansion board 116

Replacing fuses 117
Electrically heated 117
Steam heated 118

Replacing a hose to a hose pump 119

Setting detergent and rinse-aid quantities 120

Servicing the booster tank 121
Booster tank with drain tap 121
Overheat protection 121

Process valve and diaphragm 122
Checking 122
Adjusting (adjustment allowances) 122
Repair 122
Replacing the diaphragm 122

<Doc_TEC><Doc_502406700><Rel_B><Lang_GB>

Downloaded from www.Manualslib.com manuals search engine

Booster pump 123

Process tank 124
- Draining the process tank 124
- Replacing a sensor 124
- Cleaning 124
- Disinfecting the process tank 124
- Volume calibration 124
  - Hose routing for process tank with top connection 125
  - Hose routing for process tank with floor connection 126

Drain valve 127
- Checking 127
- Adjusting (adjustment allowances) 127
- Repair 127
- Replacing the diaphragm 127

Waste tank 128
- Replacing and adjusting sensors 128
- Manual cleaning 128

Drain pump 129
- Checking 129
- Replacement 129

Water valves 130
- Replacing a filter 130
- Replacing the valve 130

Steam valves and condensation traps 131
- Replacing and cleaning filters 131
- Replacing a steam hose 131

Detergent cabinet 132
- Dosing pump and flow transmitter 133
- Replacing a dosing pump 133
- Replacing a flow transmitter 133

Replacing a pressure sensor 134

Replacing the differential pressure sensor 135

Frequency converter 136
- Replacement 136
- Configuration 137

Electrical diagrams 143

<Doc_TEC><Doc_502406700><Rel_B><Lang_GB>

Downloaded from www.Manualslib.com manuals search engine

GETINGE

FOREWORD

This service manual is intended for maintenance and service personnel working with Getinge 88-series washer disinfectors.
The service manual is divided into the following sections:

- Safety regulations
- Introduction to the machine
- Software description and menu tree
- Preventive maintenance
- Fault indications and troubleshooting
- Repair and adjustments
- Electrical diagram of the washer disinfector
- Monitoring system (Option)
- Electrical diagram of the monitoring system

The purpose of the service manual is to provide information for the maintenance and service personnel whose job it is to ensure safe operation with optimum efficiency.
See under Intended use on page 8.
Before starting work on the machine, the maintenance and service personnel must have read the safety instructions in this manual and familiarized themselves with the operation of the machine and its safety instructions. They must also have done a service training course at Getinge Academy

Read the safety instructions in the service manual before starting work on the machine.

The information in this manual describes the machine as dispatched from Getinge. There may be differences due to customization.
The machine is accompanied by the following documentation:

- User manual
- Installation manual
- Technical manual (this book)
- Spare parts list
- Goods positioning instructions

The goods positioning instructions supplied must be put up in a clearly visible position at the time of installation.
Getinge reserves the right to change the specification and design without prior notice.
The information in this manual was up to date on the date of issue of the manual.

© Copyright
The content of this manual must not be copied, in whole or in part, without the written consent of Getinge.

Downloaded from www.Manualslib.com manuals search engine

SAFETY REGULATIONS

This machine has been designed with a number of built-in safety devices. To avoid injury, it is highly important not to bypass or disable these safety devices. If the equipment is used in a manner not specified by the manufacturer this can impair the safety equipment on the machine.

NOTE:
Before starting any servicing or maintenance work on the machine, isolate it from the incoming electrical supply, shut off water and steam supplies and drain the process, booster and waste tanks.

Important

- Take care when handling the chemical agent used in the machine. Read the details on the container or contact the manufacturer:
  - if the agent comes into contact with the operator's eyes or skin or if the vapors are breathed in, etc.
  - about storing the agent and disposing of empty containers.
- The machine must be connected in accordance with the installation instructions. (Check against the rating plate)
- The machine may only be operated by adults.
- Installation and service work must be done by personnel trained in the use of this machine.
- Never bypass the door switch of the machine.
- Leakage in the system, due to a worn door seal for example, must be repaired without delay.
- Before repair or service work is done, the personnel concerned must study the relevant handbooks and service manuals.
- Before welding begins on or close to the machine, all wiring connected by plugs and sockets must be disconnected from all circuit boards in the machine.
- The machine must not be hosed down with water.
- Take care when using corrosive detergents.
- Precautions must be taken with hot water and steam.
- Run a program with disinfection before starting servicing work. If this is not possible, disinfect the machine with disinfectant before starting servicing work.
- Before starting servicing work on the machine, make sure that the tanks (booster tank, process tank, chamber and waste tank) do not contain any water.
- Before starting any servicing or maintenance work on the machine, isolate it from the incoming electrical supply, shut off water and steam supplies and drain the process, booster and waste tanks.
- Spare parts may only be obtained from Getinge EDC.

In an emergency

- Switch off the main switch
- Close stopcocks in the water and (where present) steam supply lines.

Product liability

Any modification or incorrect use of the equipment without the approval of Getinge Disinfection AB invalidates Getinge Disinfection AB's product liability.
This product was manufactured by:
GETINGE DISINFECTION AB
Ljungadalsgatan 11, Box 1505
351 15 Växjö, Sweden

CE 0413

Isolating device

The machine must be fitted with a separate, lockable isolating device in the electric power supply. The isolating device must be easily accessible on a wall close to the machine. The installation must conform to and be marked in accordance with local provisions.

<Doc_TEC><Doc_502406700><Rel_B><Lang_GB>

Downloaded from www.Manualslib.com manuals search engine

GETINGE

INTRODUCTION

Intended use of the machine

Getinge S-88 series machines are washer disinfectors intended for cleaning, disinfection and drying. Intended fields of application are surgical instruments (solid and tubular), dishes, hand bowls, glass goods, suction flasks, baby bottles, anaesthesia equipment and OP shoes. Depending on program design.

Validation of goods according to intended use is done with Getinge Disinfection AB's standard loads.

An Installation Qualification, an Operating Qualification and a Performance Qualification according to ISO 15883 must be carried out before putting the machine into service.

Incorrect use can result in damage to objects and personal injuries

Attention symbols

Some of the warnings, instructions and advice in this manual are so important that we use the following special symbols to draw attention to them. The symbols used are as follows:

This symbol indicates a warning in the service manual. It warns of a hazard that may lead to more or less severe injury and in certain cases mortal danger.

It also highlights warnings to avoid damage to equipment.
This symbol highlights a warning in the text of the service manual dealing with the handling of components sensitive to ESD. The hazard that it warns about may result in damage to hardware and/or circuit boards.

This symbol highlights the risk of injury by burning.
The part or the surface may be very hot.

This symbol shows that voltage is or may be present in the machine or parts of the machine.

Residual current device (RCD)

If it is intended to use a residual-current device (RCD)(30 mA personal protection) with the machine, the RCD must be of class 4P B.

Downloaded from www.Manualslib.com manuals search engine

Description

General

A description of the mechanical design and general functions of the machine is given the instruction manual. This section contains a general description of the control system. For detailed information about the software and its settings, see the chapter entitled Software description and settings.

Control system

The machine has an electronically programmable control system which can hold 12 programs. The control system is operated from the control panels of the machine, to the left of the door on the soiled side.

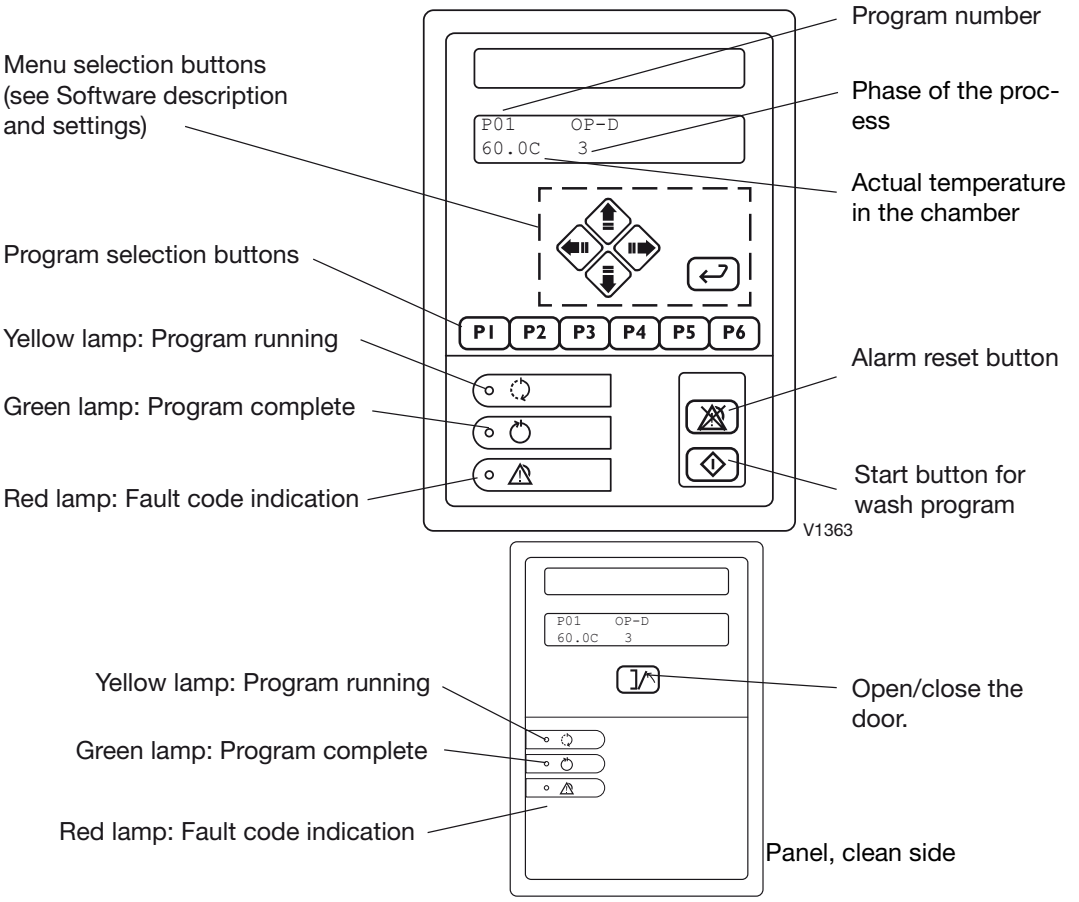

Six of these programs can be started with the program selection buttons. With P1-P6 you can choose up to six programs. If the control system has more programs, the subsequent ones are chosen from a scrollable list. You can reach the list of available programs (from standby mode), by pressing ↵ twice and choosing a program with ▼ or ▲. Confirm the chosen program with ↵.

The machine comes with a number of standard programs in the programmer (see the appendix for Standard programs). Parameters in these programs can be modified to suit the needs of individual users. Individual programs can be created with a PC. An entire standard program or parts of one can be used as a starting point for programming. Programming may only be done by an authorized service technician.

<Doc_TEC><Doc_502406700><Rel_B><Lang_GB>

Downloaded from www.Manualslib.com manuals search engine

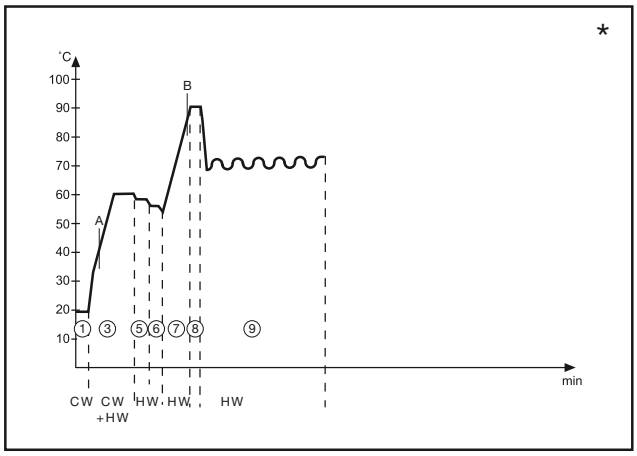

*The times may vary because of different media. P02

Program cycles

①	Pre-rinse 1	A	Alkaline detergent
②	Pre-rinse 2	B	Neutralization
③	Wash	C	Instrument milk *(extra equipment)* If instrument milk is dosed, neutralization is not dosed.
④	Neutralization		
⑤	Post-rinse 1		
⑥	Post-rinse 2		
⑦	Final rinse	D	Chemical disinfection
⑧	Disinfection		
⑨	Drying		

Programs are chosen with the program selection buttons and the program is started with ◈ (starting of a program is indicated by the yellow lamp at ↻ flashing for 5 seconds and then going out). When the program is complete, a green lamp lights up at ⏻ and the clean-side door opens automatically. (The door can stay closed after completion of the process by a setting in the program. In this case the door is opened via the OP panel on the clean side). The illustration at the top of the page shows the program sequence in the OP-D program.

Aborting program start

A started program can be aborted within 5 seconds of the machine starting to close the door on the soiled side. To abort a started program, press ◈ again. During the period when the program can be aborted, a yellow lamp flashes at ↻. The door is unlocked and opened automatically and the machine can be restarted in the usual way.

Aborting a running program

While a program is running, the machine can be stopped with the main switch. This cuts off the power supply and fault code `F00 POWER FAIL` is displayed. The alarm is acknowledged by normal acknowledgement (see the user manual).

Downloaded from www.Manualslib.com manuals search engine

GETINGE

Schematic diagram

Electric heating

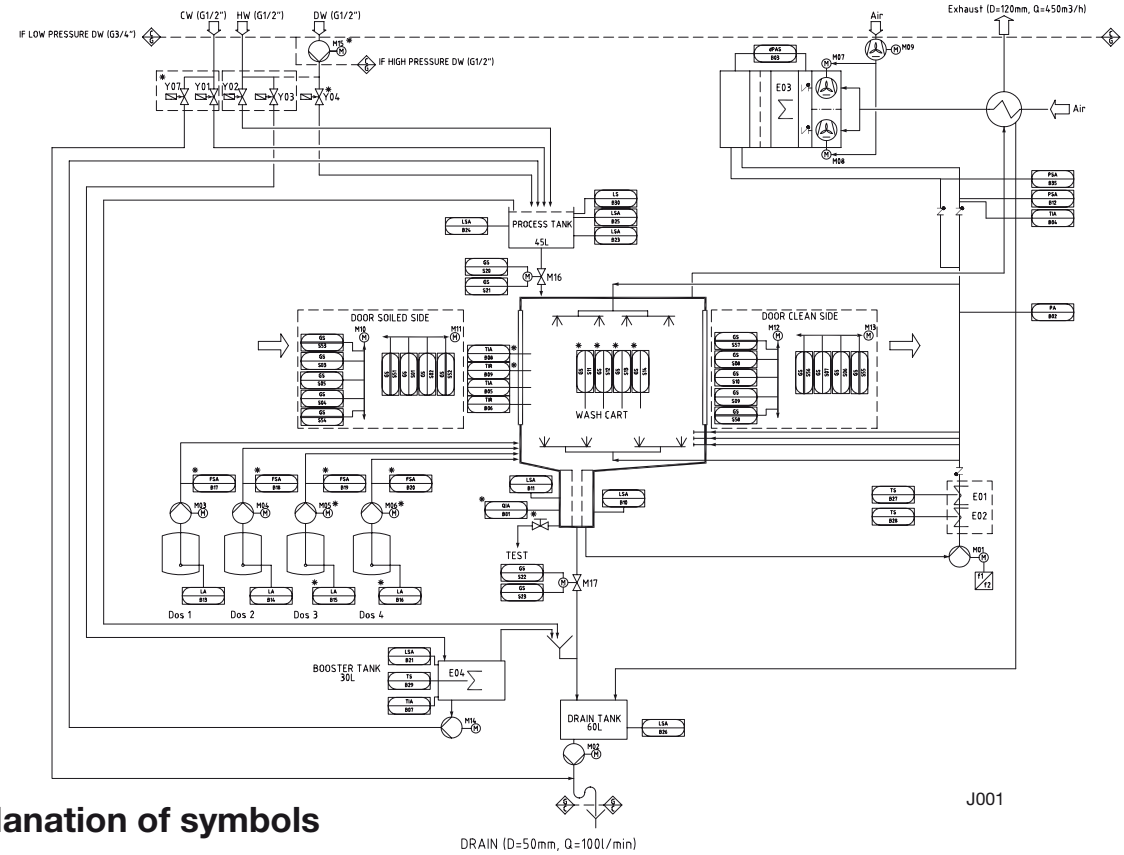

J001

Explanation of symbols

Connection lines etc.

- Main flow line
- Subsidiary flow line
- Optionel equipment
- Optionel equipment
- DN15 Dimension of piping
- Connections
- No connections
- Geinge / Customer Limits of supply with identification code
- Flow direction
- Spray Nozzle

Heat exchangers

- Heat exchanger air/air

Valves

- Valve manually activated
- Valve solenoid activated
- Valve pneumatic activated

Motor Objects

- Pump
- Blower/Fan
- Electric heater
- Electric motor

Filters

- Filter air
- Filter liquid

Motor Objects

- Pump
- Blower/Fan
- Electric heater
- Electric motor

Auxilliary

- Check valve
- Steam trap
- Drain
- Hose

Instrument functions

- Control system connected instr.
- Local control (Hardware)
- Local
- LSA B11 Instrument function / Tag number

V1560

<Doc_TEC><Doc_502406700><Rel_B><Lang_GB>

Downloaded from www.Manualslib.com manuals search engine

GETINGE

Steam heating

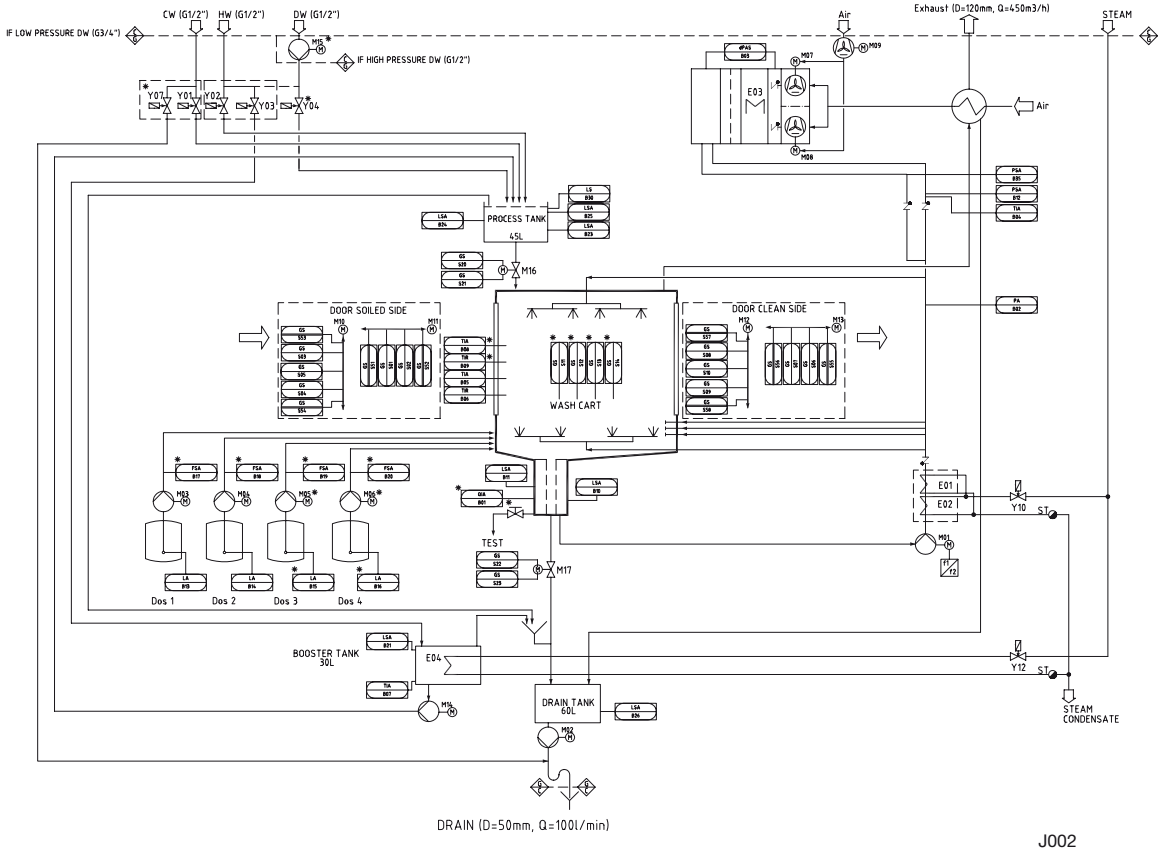

J002

Explanation of symbols

Connection lines etc.

- Main flow line
- Subsidiary flow line
- Optionel equipment
- Optionel equipment
- DN15 Dimension of piping
- Connections
- No connections
- Getinge / Customer Limits of supply with identification code
- Flow direction
- Spray Nozzle

Heat exchangers

- Heat exchanger air/air

Valves

- Valve manually activated
- Valve solenoid activated
- Valve pneumatic activated

Motor Objects

- Pump
- Blower/Fan
- Electric heater
- Electric motor

Filters

- Filter air
- Filter liquid

Motor Objects

- Pump
- Blower/Fan
- Electric heater
- Electric motor

Auxilliary

- Check valve
- Steam trap
- Drain
- Hose

Instrument functions

- Control system connected instr.
- Local control (Hardware)
- Local
- LSA B11 Instrument function / Tag number

V1560

<Doc_TEC><Doc_502406700><Rel_B><Lang_GB>

Downloaded from www.Manualslib.com manuals search engine

Software description and settings

Description

This section describes the PACS 350 control and monitoring system. The purpose of the control system is to monitor safety and gather information and send it to the executive components of the washer-disinfector so that a number of disinfection processes can be performed in accordance with a predetermined template. The order signals are worked out by the computer program of the control unit in conjunction with measurements of actual parameter values for the current program. These are usually times, temperatures and pressures.

Process selection

Several different pieces of equipment can be connected to the control unit for programming, monitoring and documenting the disinfection processes.
The operator communicates with the control unit via a control panel or an ordinary PC. All operator panels can be used to monitor the processes, since they display all the set parameter values as well as actual values on request.

Programs, system definitions and process data can be documented by connecting a printer to the unit. A host computer can also be connected directly to the CPU of the control system.
When the need arises, a measuring and monitoring system entirely independent of the control system can be set up by connecting a PACS MONITORING SYSTEM, consisting of CPU, operator panel and connections to the control unit CPU.

The computer contains programs for calibration of the temperature and pressure sensors. Where alternative correction constants are known, they can be entered manually. The testing functions include means of activating analog and digital outputs and for reading analog and digital inputs.

Downloaded from www.Manualslib.com manuals search engine

GETINGE

Control panel

The buttons on the control panel are used to choose programs, navigate the menu tree, acknowledge fault codes, etc.

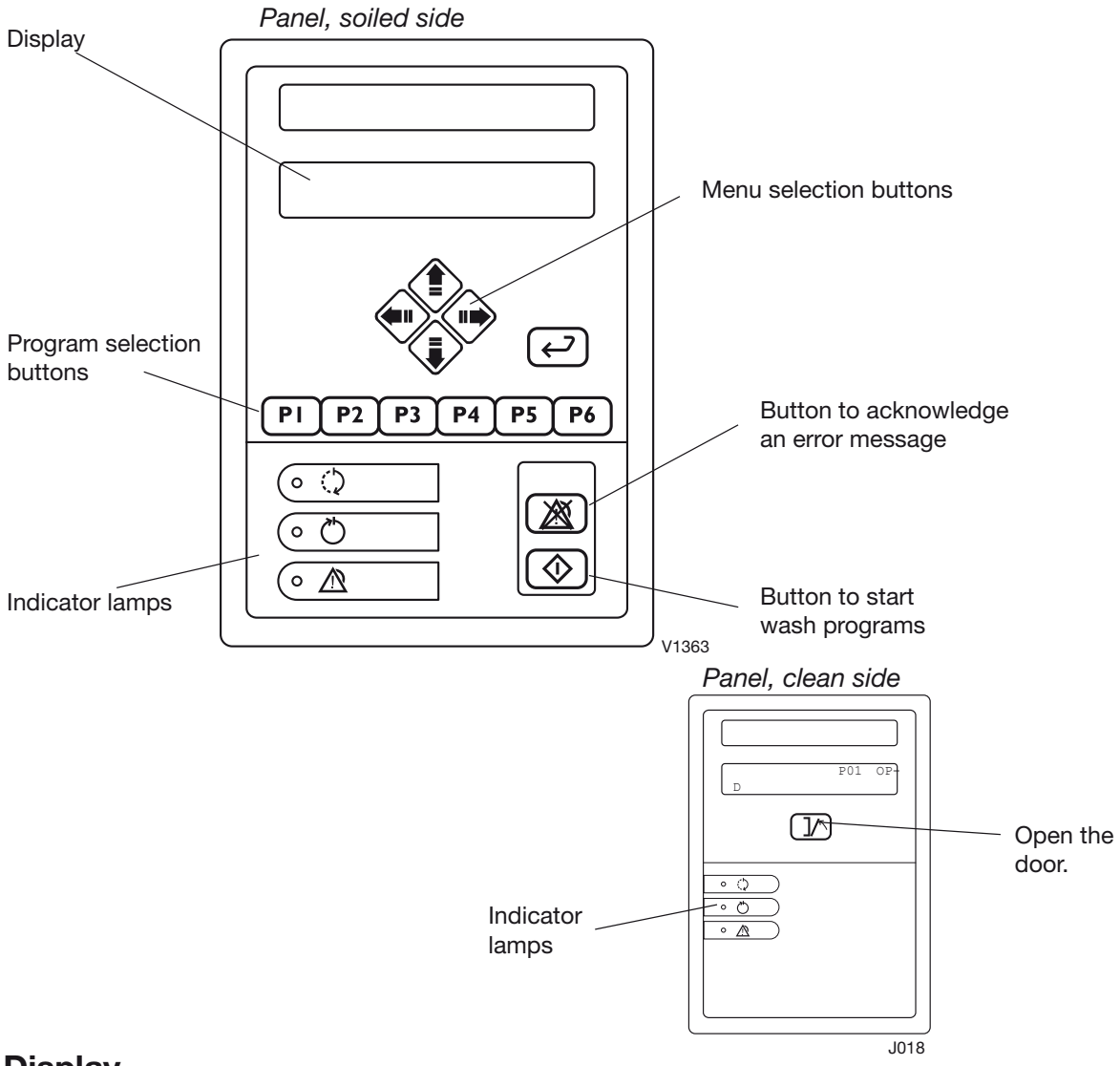

Display

The display has two lines, each with a capacity of 20 characters.

```
P01 OP-SHORT-D
47.0 °C    126
```

Information or error messages appear on the bottom line and replace the text that would otherwise appear here.

Program selection buttons

With P1-P6 you can choose up to six programs. If the control system has more programs, the subsequent ones are chosen from a scrollable list. You can reach the list of available programs (from standby mode), by pressing ↵ twice and choosing a program with ▼ or ▲. Confirm the chosen program with ↵.

Downloaded from www.Manualslib.com manuals search engine

Menu selection buttons

There are five buttons for navigating the panel. These fixed buttons are four arrow buttons that control the cursor (, , and) and .

- Used to go back one step (up one level) in menus. If the button is held down for a little longer, you are returned to the main menu. It also moves the cursor.
- Moves the cursor. Not used in menus and lists.
- Shows the next object in the list.
- Shows the previous object in the list.
- Goes to the chosen object in the list or opens a field for editing if there is an editable field.

<Doc_TEC><Doc_502406700><Rel_B><Lang_GB>

Downloaded from www.Manualslib.com manuals search engine

GETINGE

Scrolling in menus and lists

You can use ◄, ►, ▼ and ▲ to scroll through menus and lists.
You can scroll either line by line or two lines at a time, depending on what is displayed.
The top line of the list may look like the example below.

```
>PRINT LAST PRG.
SYSTEM                ⌄
```

The angle bracket ">" to the left of the top line shows which object will be chosen if you press ↵. Bottom right there is a "⌄" indicating that there are more objects in the list which are displayed if you press ▼.
This is what you see if you are in a list. The "arrows" to the right show that there are objects both above and below the displayed line.

```
>SYSTEM               ^
 APPLIANCE INFO       ⌄
```

When you reach the end of the object list, only one up-arrow appears at the right edge of the display. Menus and lists are "endless"; you can reach the top of the list by pressing ▼ at the end of the list.

```
 SYSTEM               ^
>APPLIANCE INFO
```

Field editing

↵ opens the chosen field for editing. The content of the field is changed with ▲ or ▼. These arrow keys scroll in an endless list containing numbers. When a field is opened for editing, the first character is highlighted. To move the cursor use ◄ or ►. Entered values are saved when you press ↵. On saving, the system checks that the value is in the permitted range.

Downloaded from www.Manualslib.com manuals search engine

Passwords

There are four passwords with different levels of authorization in the system program. The operator password has the lowest authority; the programming password has full authority.
The following password levels are as follows:

- Operator - code 558387.
- Supervisor - contact service for code.
- Service - contact service for code.
- Programming - contact service for code.

Note: In the menu tree, where a password must be entered, there is a letter code (between PW: A-K) which indicates which function the respective password level gives authorization for.

When a password is being entered, the top line shows “ENTER PASSWORD”. Press ↵ to open the entry field for editing . Each digit can be changed with ◈ and ◈. ◈ and ◈ toggle between the digits. Press ↵ to confirm the entered password.
If the wrong password is entered, “WRONG PASSWORD” appears on the first line. Press ↵ to return to the display that shows “ENTER PASSWORD”

Note: The password cannot be changed.

Operator

Code in menu tree	Authority to change
A	Parameters of type A and to see parameters of type I.
D	Acknowledge alarms

Supervisor

Code in menu tree	Authority to change
A	Parameters
B	Calendar (time and date)
C	Sensor calibration
D	Acknowledge alarms
H	Process-critical configurations, parameters of type P.
J	Password configuration
K	Documentation

Downloaded from www.Manualslib.com manuals search engine

Service

Code in menu tree	Authority to change
A	Parameters.
B	Calendar (time and date)
C	Sensor calibration
D	Acknowledge alarms
E	Service messages
F	DIP switches
G	Non-process-critical system configurations
H	Process-critical configurations, parameters of type P.
J	Password configuration
K	Documentation

Programming

Code in menu tree	Authority to change
A	Parameters.
B	Calendar (time and date)
C	Sensor calibration
D	Acknowledge alarms
E	Service messages
F	DIP switches
G	Non-process-critical system configurations
H	Process-critical configurations, parameters of type P.
I	Programming (phases and programs)
J	Password configuration
K	Documentation

Downloaded from www.Manualslib.com manuals search engine

GETINGE

Menu tree

Menu tree ____ 20
Main menu 1, Program name (1.1) ____ 22
Choose a program ____ 22
Change parameters (1.1.2) ____ 23
Main menu 2, Machine name (1.2) ____ 23
Machine information (1.2) ____ 23
Main menu 3, Cycle counter (1.3) ____ 24
Variable list (1.3.1…) ____ 24
Main menu 4, Settings (1.4) ____ 25
Print parameters of the chosen cycle (1.4.1) ____ 25
System menu (1.4.2) ____ 25
Calendar menu (1.4.2.1) ____ 25
Time menu (1.4.2.1.1) ____ 26
Date menu (1.4.2.1.2) ____ 26
Calibration menu (1.4.2.2) ____ 27
Manual calibration menu (1.4.2.2.1) ____ 27
Automatic calibration menu (1.4.2.2.2) ____ 28
Calibrate the chosen sensor (1.4.2.2.2.1) ____ 28
Choose a sensor (1.4.2.2.2.2) ____ 29
Compensation table menu (1.4.2.2.3) ____ 30
Configuration menu (1.4.2.3) ____ 30
Language menu (1.4.2.3.1) ____ 30
Date format menu (1.4.2.3.2) ____ 31
Unit of pressure menu (1.4.2.3.1.3) ____ 32
Temperature unit menu (1.4.2.3.1.4) ____ 33
Printer menu (1.4.2.3.2) ____ 34
Print mode menu (1.4.2.3.2.1) ____ 34
Slow interval menu (1.4.2.3.2.2) ____ 35
Fast interval menu (1.4.2.3.2.3) ____ 36
Transfer speed menu (1.4.2.3.2.4) ____ 37
Alarm clock menu (1.4.2.3.3) ____ 37
PACS address menu (1.4.2.3.4) ____ 38
Communication settings COM0 (1.4.2.3.5.1) ____ 39
Communication settings COM1 (1.4.2.3.5.2) ____ 40
Communication mode COM2 (1.4.2.3.5.3) ____ 41
Change cycles (1.4.2.3.6.1) ____ 42
DIP switch menu (1.4.2.4) ____ 43
Service menu (1.4.2.5) ____ 44
Fault log menu (1.4.2.5.1) ____ 44
Service message menu (1.4.2.5) ____ 45
Diagnostics menu (1.4.2.5.3) ____ 45
Test analog in menu (1.4.2.5.3.1) ____ 46
Test analog out menu (1.4.2.5.3.2) ____ 47
Test digital in menu (1.4.2.5.3.3) ____ 48
Test digital out menu (1.4.2.5.3.4) ____ 49
Test user flag menu (1.4.2.5.3.5) ____ 50
Test printer (1.4.2.5.3.7) ____ 51
Test LED/buzzer display (1.4.2.5.3.8) ____ 52
Save RAM in flash menu (1.4.2.6) ____ 53
Appliance info (1.4.3) ____ 53

<Doc_TEC><Doc_502406700><Rel_B><Lang_GB>

Downloaded from www.Manualslib.com manuals search engine

GETINGE

Menu tree

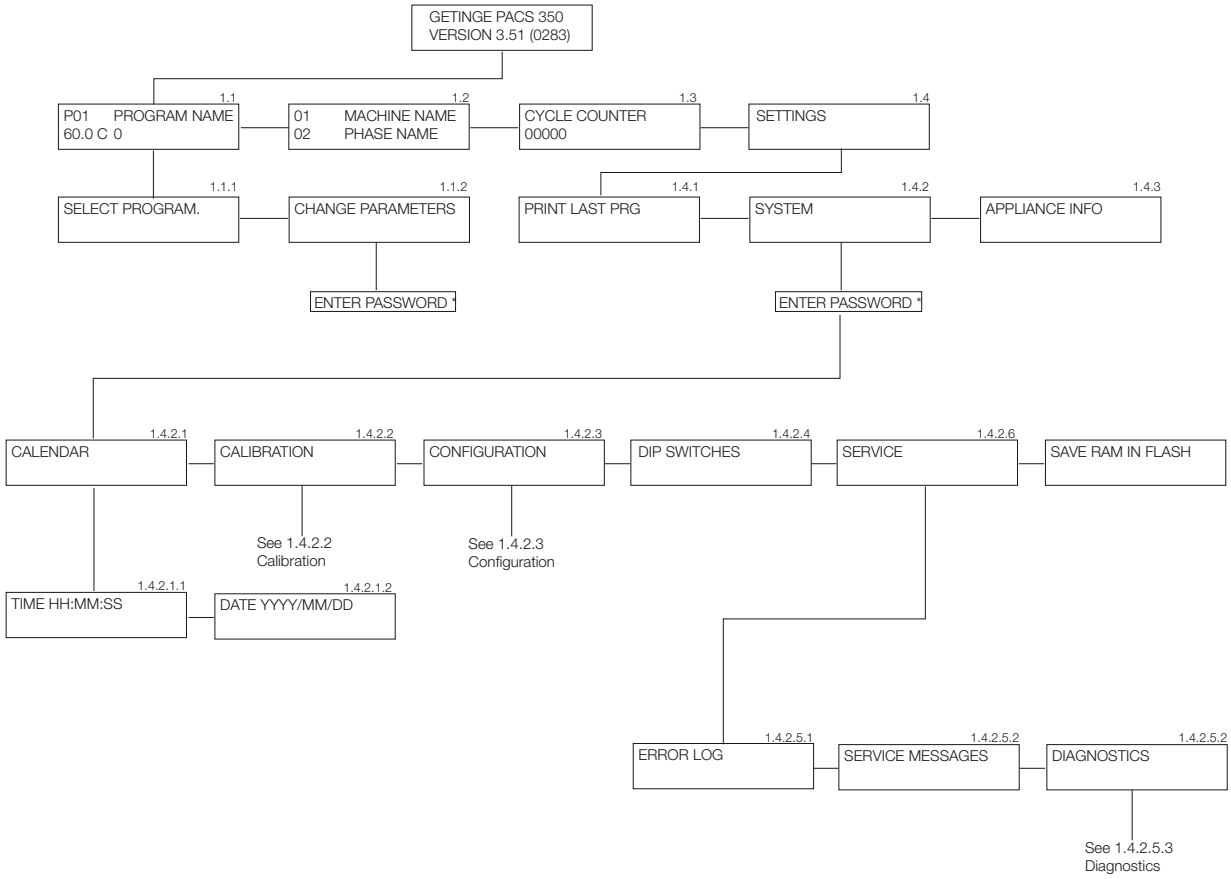

* Operator password required
** Service personnel password required

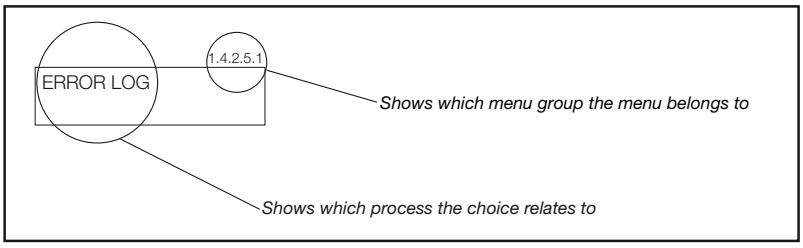

<Doc_TEC><Doc_502406700><Rel_B><Lang_GB>

Downloaded from www.Manualslib.com manuals search engine

1.4.2.2 CALIBRATION

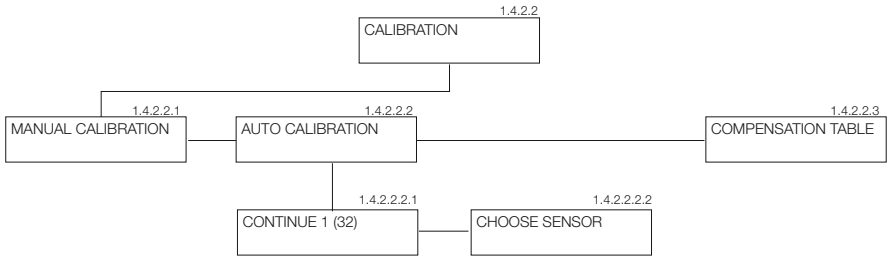

1.4.2.3 CONFIGURATION

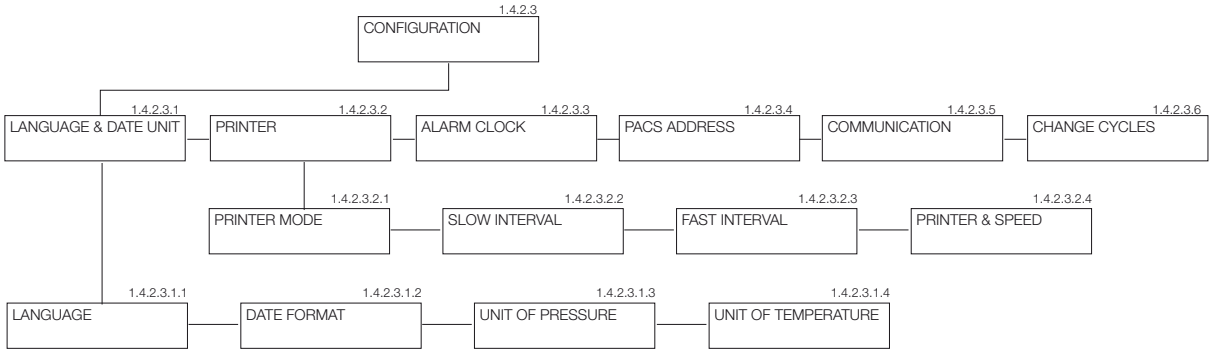

1.4.2.5.3 DIAGNOSTICS

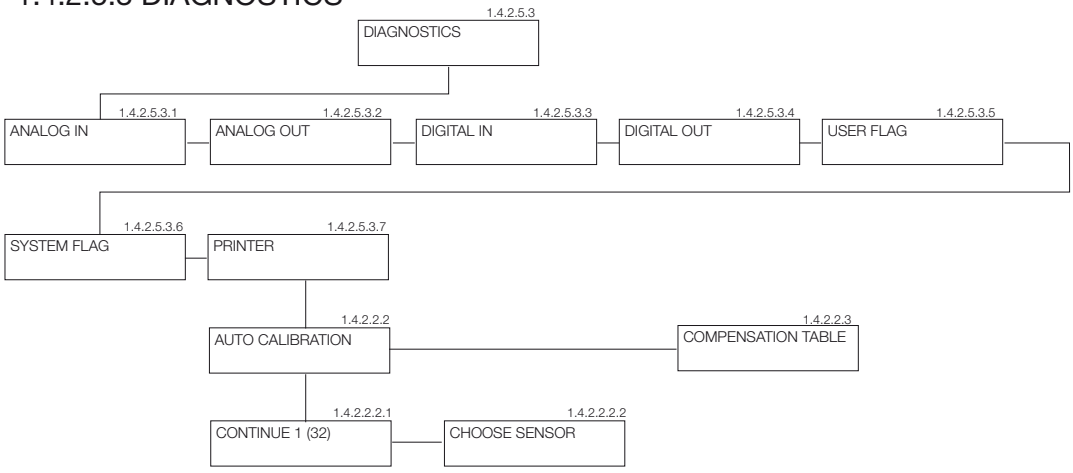

<Doc_TEC><Doc_502406700><Rel_B><Lang_GB>

Downloaded from www.Manualslib.com manuals search engine

GETINGE

Main menu 1, Program name (1.1)

In standby mode the top line of the display shows the name of the last cycle chosen. The second row shows two preselected values, normally this is the temperature in the machine and the cycle counter. The main purpose of this menu is to choose a wash cycle and to be able to change parameters.

This menu has two submenus.

SELECT PROGRAM (1.1.1)

CHANGE PARAMETERS (1.1.2)

Select the program.

In the main menu 1 press ↵ to move to the SELECT PROGRAM menu then press enter again to reach the various programs. Use the ▼ and ▲ buttons to highlight the program you want to use. To select a program press ↵. The cycles are pre-configured in the program and cannot be changed by the operator.

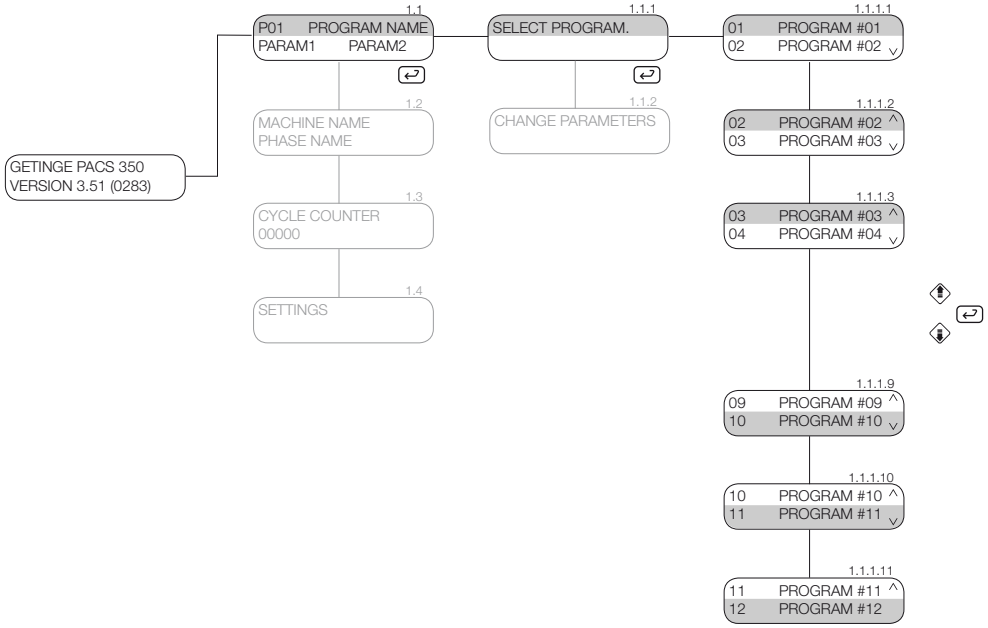

Downloaded from www.Manualslib.com manuals search engine

Change parameters (1.1.2)

In main menu 1, press ⏎ to go to the SELECT PROGRAM menu. Then press ◈ to activate “CHANGE PARAMETERS”. To select a program, press ⏎ again.

Every cycle has a set of preset parameters. When a cycle has been chosen as explained in the previous section, the parameters appear on the display. The number of the parameter depends on how the cycle was configured when it was created in the program.

The parameters that have an “A” indication in the bottom right corner are adjustable. With a class A password, the value can be changed by pressing ⏎.

If an“I” is displayed in the same position then the parameters are only information.
P parameters can only be changed with class A + H passwords.

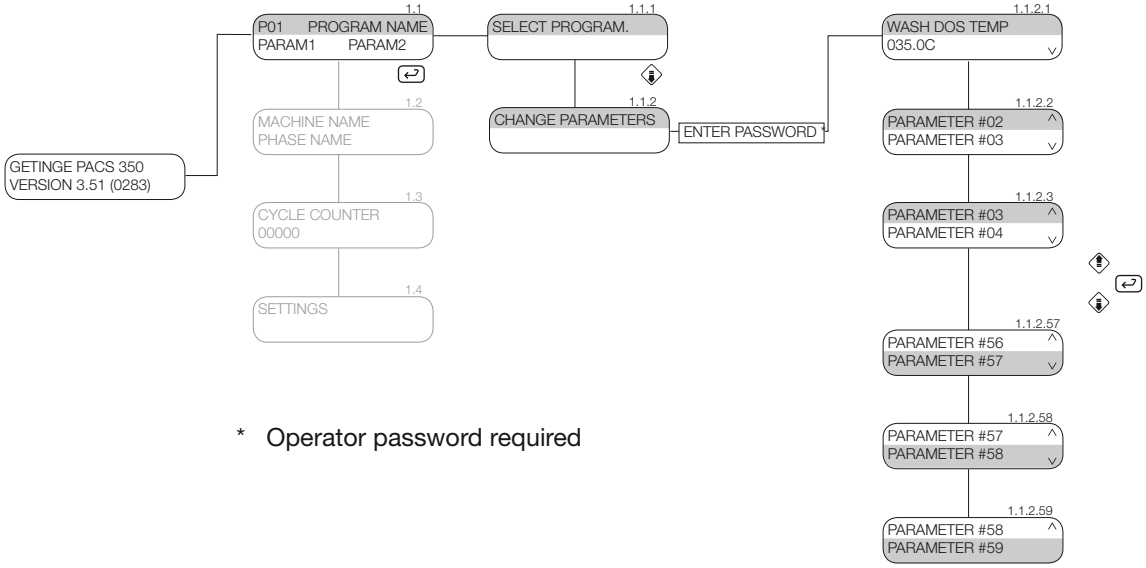

* Operator password required

Main menu 2, Machine name (1.2)

Main menu 2 shows information about the machine and the current phase. The information cannot be changed.

Machine information (1.2)

The top line shows name/ID of the disinfection program and the bottom line shows the current phase.

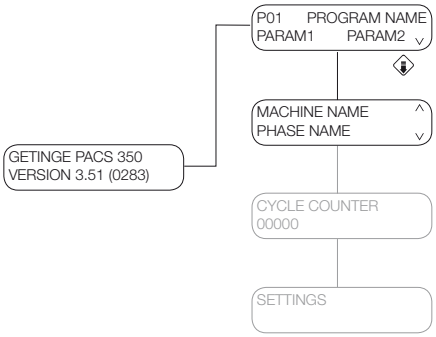

<Doc_TEC><Doc_502406700><Rel_B><Lang_GB>

Downloaded from www.Manualslib.com manuals search engine

GETINGE

Main menu 3, Cycle counter (1.3)

In this menu, a selectable variable can be displayed. The top line shows the name of the variable and the bottom line shows the value of the variable.

Variable list (1.3.1…)

There is a configured number of variables for every cycle. This list is only for information about the variables. To choose the variable you want to see, press ◈ or ◈, then press ↵ to display the chosen variable.

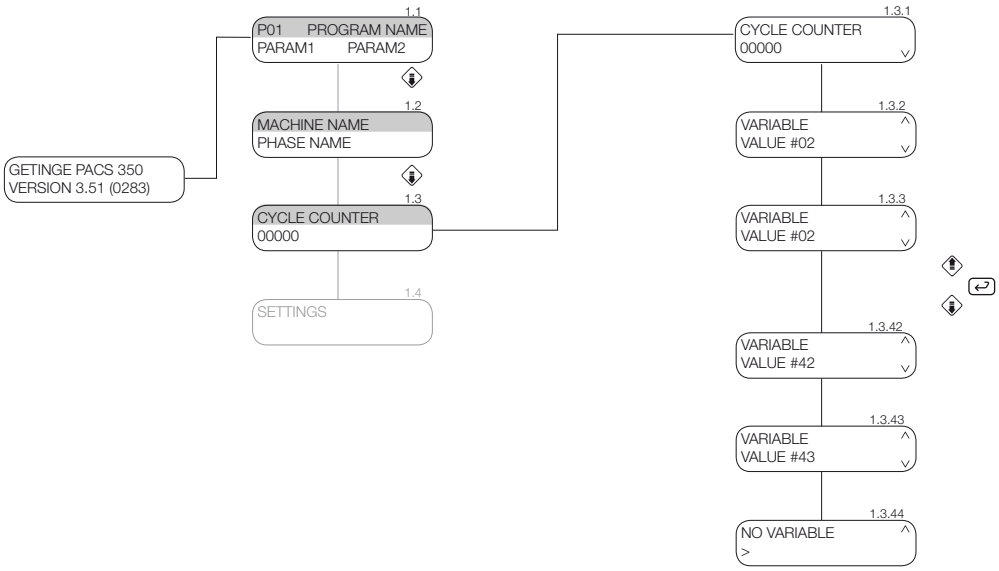

Downloaded from www.Manualslib.com manuals search engine

Main menu 4, Settings (1.4)

Main menu 4 is the settings menu for the machine. The settings menu has three submenus.

Print the parameters of the chosen cycle	(1.4.1)
System setting menus.	(1.4.2)
Appliance information.	(1.4.3)

Print parameters of the chosen cycle (1.4.1)

When a cycle has been chosen in main menu 1, the parameters of that cycle can be printed out.

Press ◈ three times to reach the settings menu, then press ↵ to choose settings. Pressing ↵ once more brings up the printing screen. Use ◈ or ◈ to choose “YES” to start printing or “NO” if you do not want to print the chosen cycle.

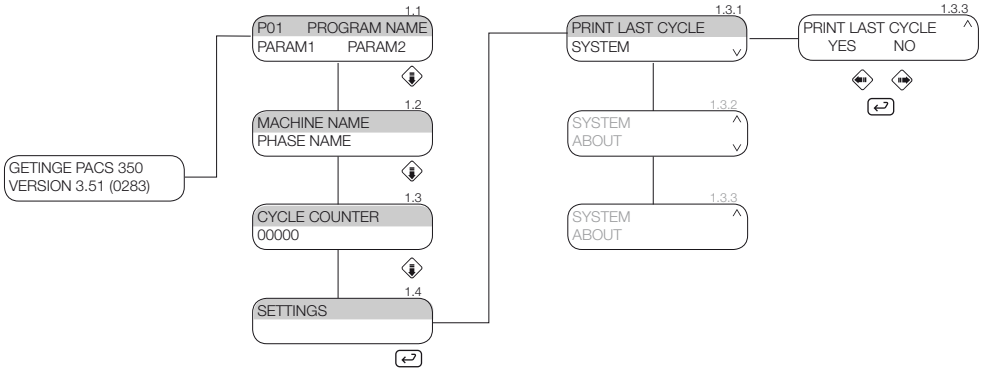

System menu (1.4.2)

The system settings menu has six submenus.

A calendar where you can enter the date and time.	(1.4.2.1)
Calibration of analog entry values.	(1.4.2.2)
Configuration of devices such as printer, alarms, alarm clocks and node addresses.	(1.4.2.3)
DIP switches.	(1.4.2.4)
Service menu with fault message, service message and diagnostics.	(1.4.2.5)
Save RAM in flash.	(1.4.2.6)

Calendar menu (1.4.2.1)

The time and date can be set in this menu.
There is a submenu for each function.

Set time.	(1.4.2.1.1)
Set date.	(1.4.2.1.2)

Downloaded from www.Manualslib.com manuals search engine

GETINGE

Time menu (1.4.2.1.1)

To set the time, follow the instructions in the menu tree below. Enter password and press ↵ when the calendar menu has been chosen. To set the time, press ↵. To change the time press ▲ and ▼ until the desired time is displayed. Then use ◀ or ▶ to change field. When the value is correctly set, press ↵ to confirm the change.

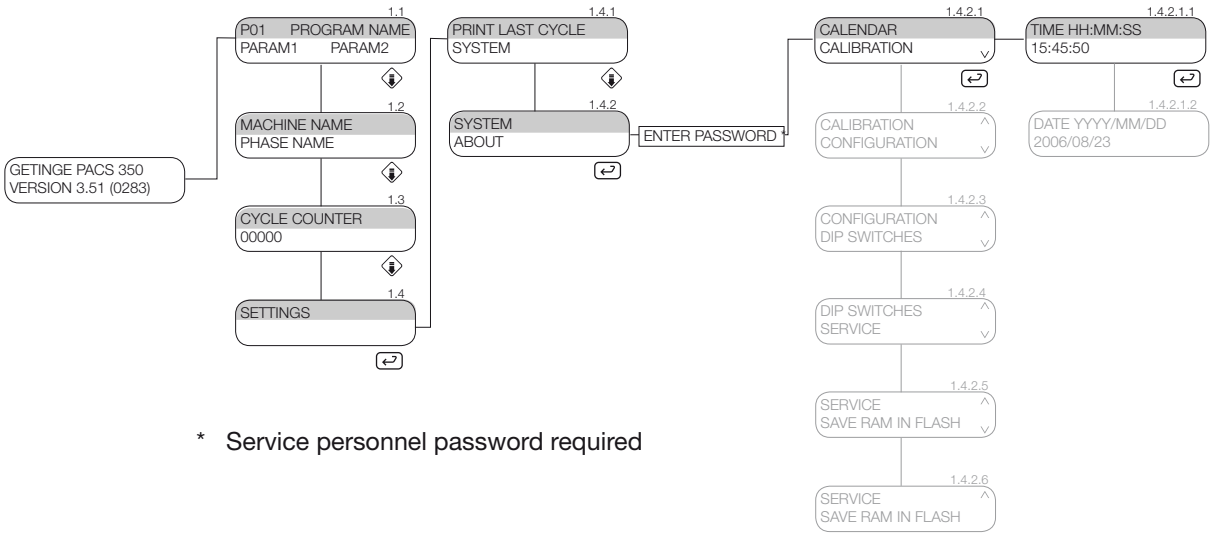

* Service personnel password required

Date menu (1.4.2.1.2)

To set the date, follow the instructions in the menu tree below. Enter password and press ↵ when the calendar menu has been chosen. To set the date, press ↵. To change the time press ▲ and ▼ until the desired date is displayed. Then use ◀ or ▶ to change field. When the value is correctly set, press ↵ to confirm the change.

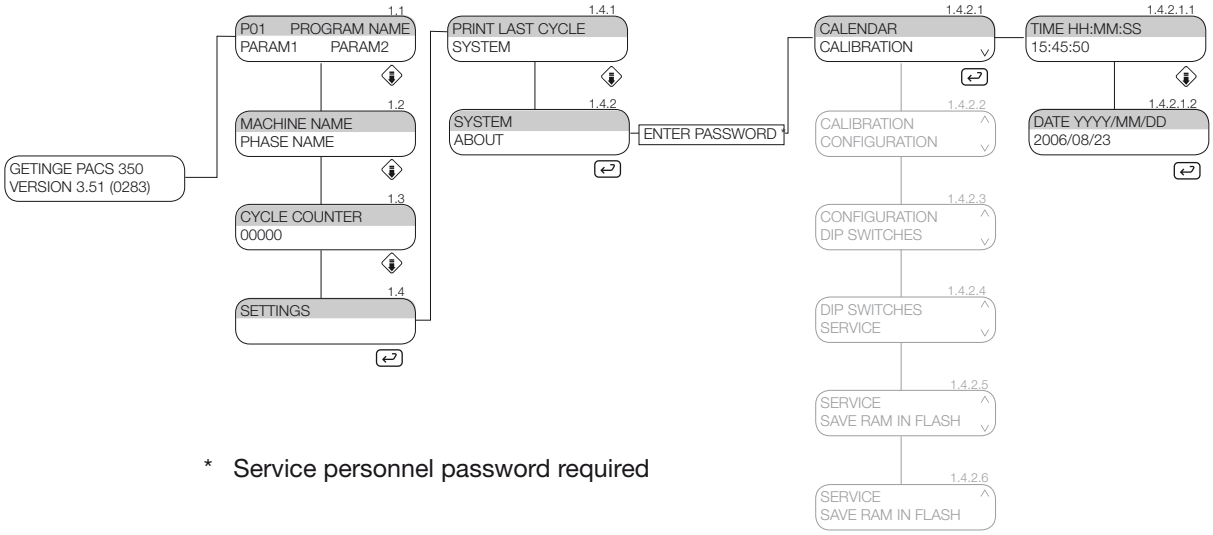

* Service personnel password required

<Doc_TEC><Doc_502406700><Rel_B><Lang_GB>

Downloaded from www.Manualslib.com manuals search engine

Calibration menu (1.4.2.2)

The calibration menu is used to calibrate analog entry values. There are three submenus for calibration.

Manual calibration.	(1.4.2.2.1)
Automatic calibration.	(1.4.2.2.2)
Adjusting the compensation table.	(1.4.2.2.3)

Manual calibration menu (1.4.2.2.1)

In manual calibration, two values for A-Gain and B-offset can be entered manually. To access manual calibration, follow the instructions in the menu tree below. To change values, press ◈ and ◈. Then use ◈ or ◈ to change field. When the value is correctly set, press ↵ to confirm the change.

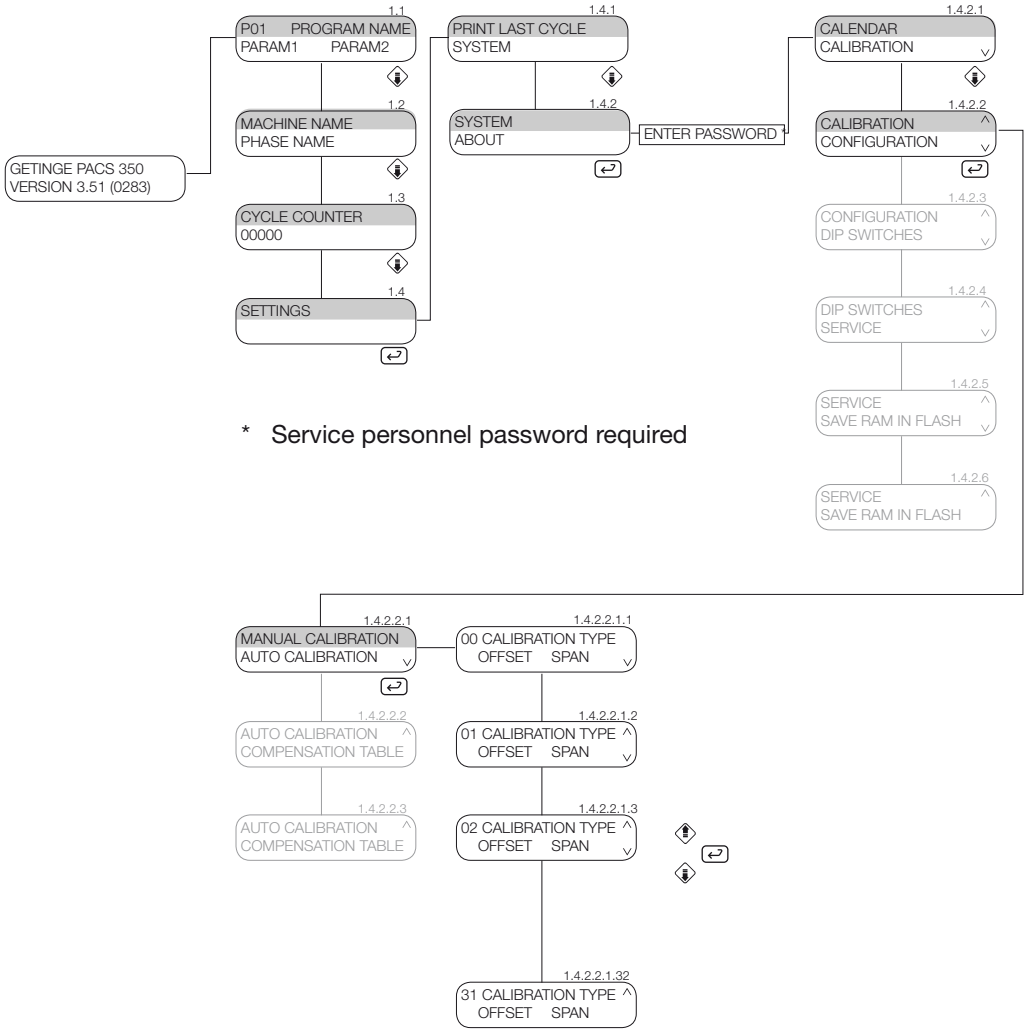

* Service personnel password required

<Doc_TEC><Doc_502406700><Rel_B><Lang_GB>

Downloaded from www.Manualslib.com manuals search engine

GETINGE

Automatic calibration menu (1.4.2.2.2)

This menu has two submenus.

Continue. (1.4.2.2.2.1)

Choose a sensor. (1.4.2.2.2.2)

With automatic calibration, you must choose a sensor for calibration. Do this in the Choose a sensor menu. When one or more sensors have been chosen for calibration, the Continue menu shows how many sensors have been chosen and an arrow appears on the right of the display. When you quit the calibration menu, all chosen sensors are deselected.

Calibrate the chosen sensor (1.4.2.2.2.1)

When one or more similar sensors have been chosen (see 1.4.2.2.2.2), this is shown by an arrow at the right-hand edge of the display, beside the word “Continue” on the first line. Pressing ↵ displays the low reference value. When the value is stable, press ↵ to confirm it. Now the high reference value is displayed. When the value is stable, press ↵ to confirm it. Now you have the option of printing out the calibration value by highlighting “YES” for printout or “NO” for no printout.

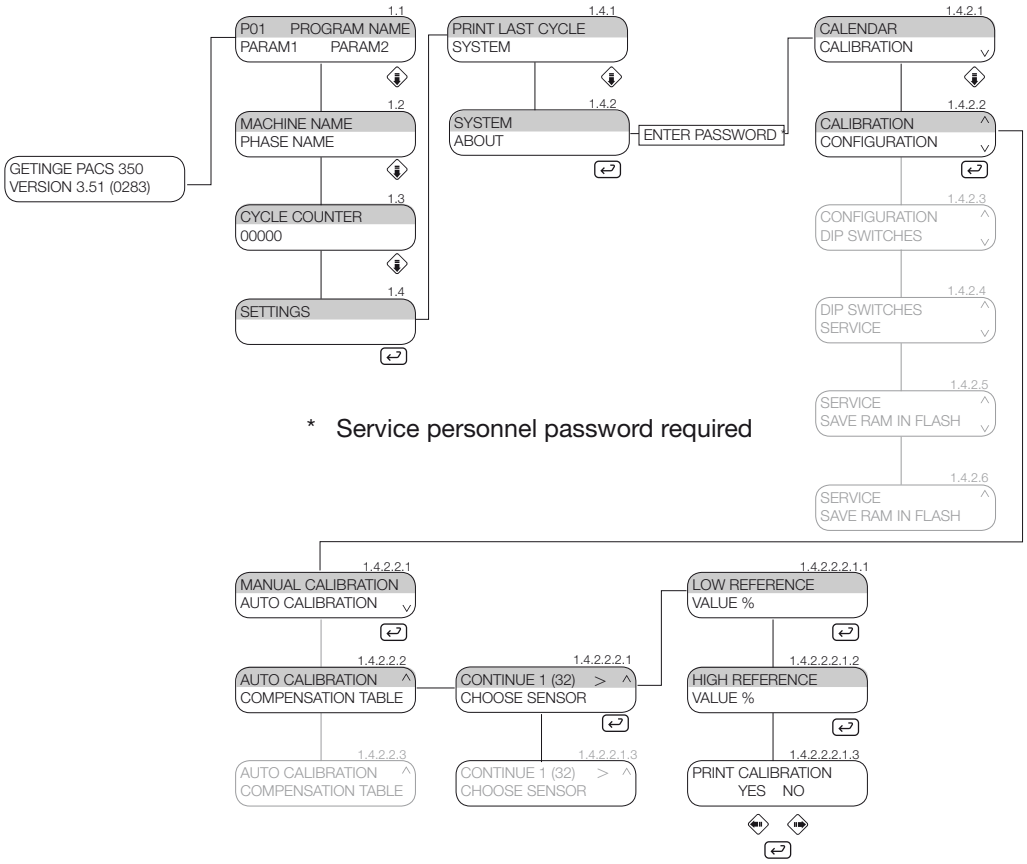

* Service personnel password required

Downloaded from www.Manualslib.com manuals search engine

Choose a sensor (1.4.2.2.2.2)

Press ↵ when Choose sensor is highlighted under automatic calibration. Confirm the choice by placing the cursor on “YES” and pressing ↵ again. The sensor has now been chosen. Note that more than one sensor can be chosen at the same time. If more than one sensor is chosen at the same time, they must be of a similar type.

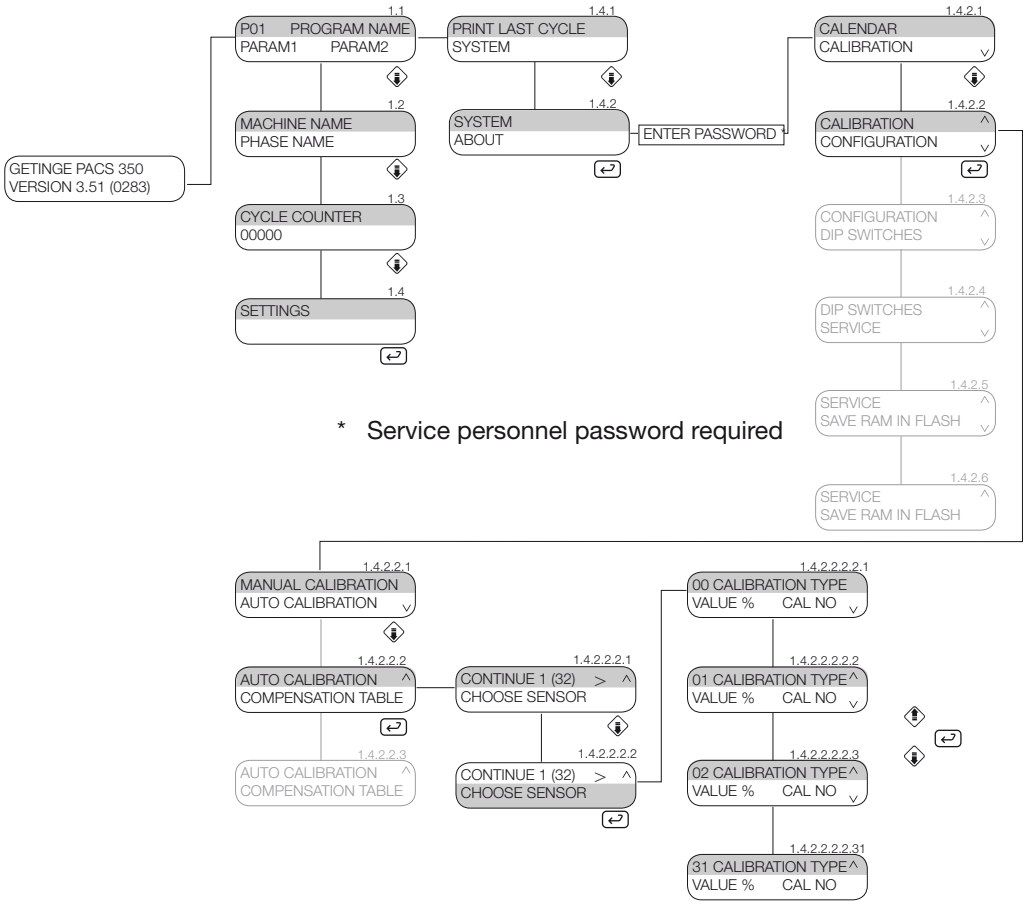

<Doc_TEC><Doc_502406700><Rel_B><Lang_GB>

Downloaded from www.Manualslib.com manuals search engine

GETINGE

Compensation table menu (1.4.2.2.3)

This menu is not applicable on this machine.

Configuration menu (1.4.2.3)

The configuration display is used to set language, and units. The printer is also set here. The alarm clock and PACS addresses are also set here. There are four submenus.

Language.	(1.4.2.3.1)
Date format.	(1.4.2.3.2)
Unit of pressure.	(1.4.2.3.3)
Unit of temperature	(1.4.2.3.4)

Language menu (1.4.2.3.1)

Language settings for the various displays can be accessed in this menu. Press ↵ and choose the required language. To confirm, press ↵.

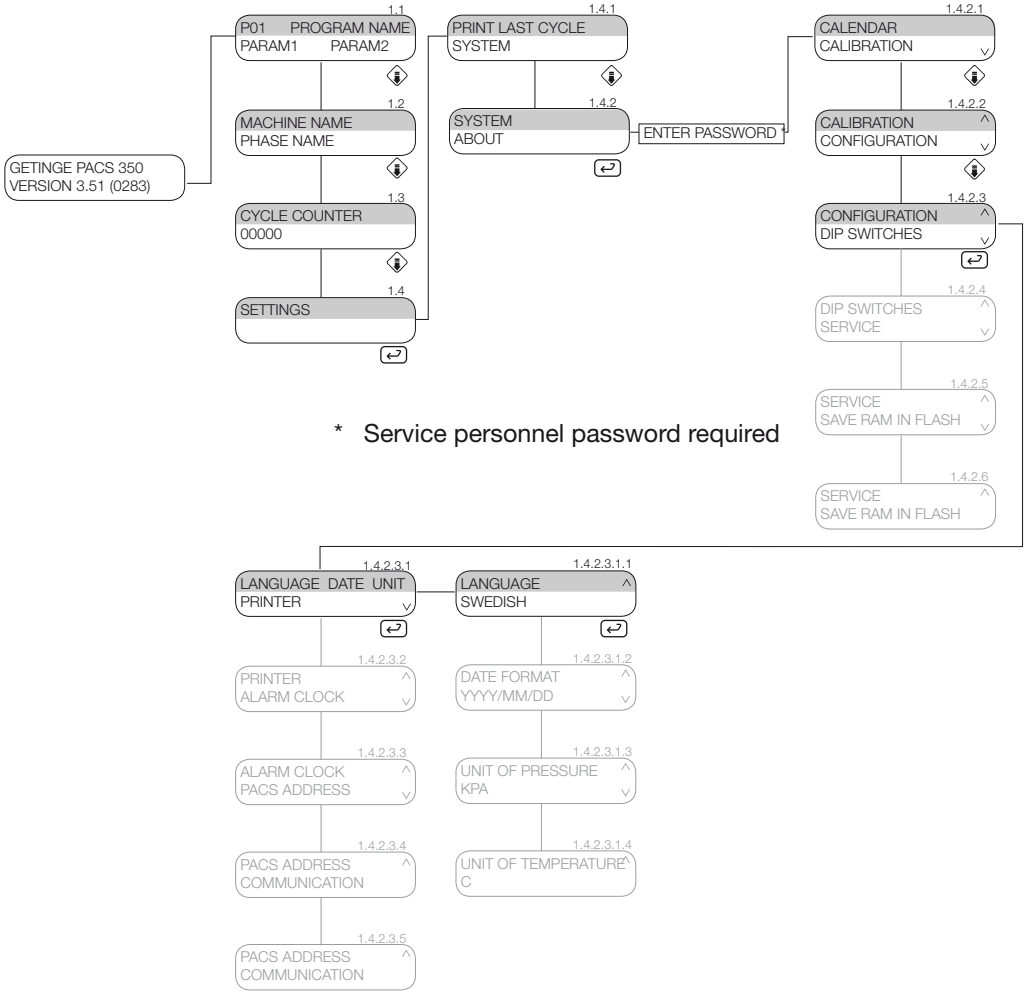

Downloaded from www.Manualslib.com manuals search engine

Date format menu (1.4.2.3.2)

The date format is chosen from this menu. There are three date formats: Press ↵ to see the different formats. Then choose the date format you want. To confirm, press ↵.

YYYY/MM/DD (1.4.2.3.2.1)

MM/DD/YYYY (1.4.2.3.2.2)

DD/MM/YYYY. (1.4.2.3.2.3)

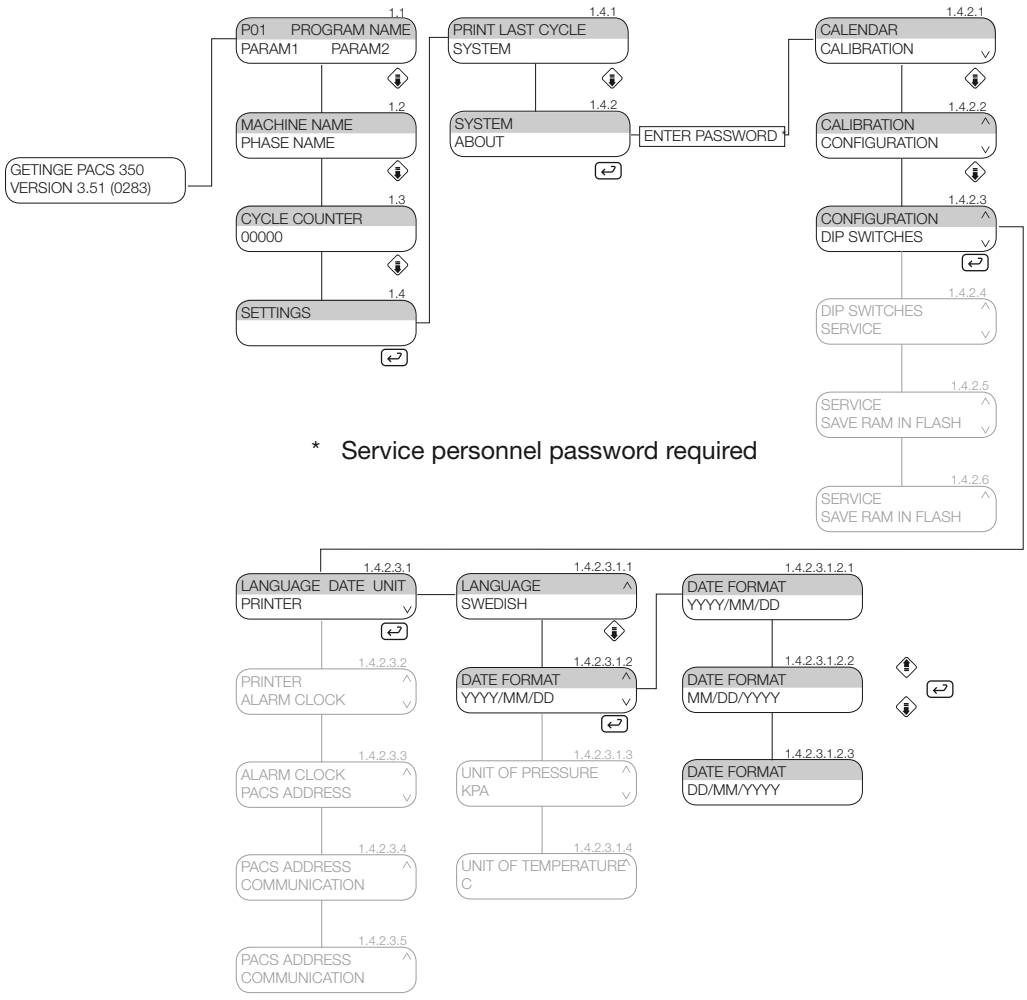

Downloaded from www.Manualslib.com manuals search engine

GETINGE

Unit of pressure menu (1.4.2.3.1.3)

Three units of pressure are available: Press ↵ to access the menu with the various units, then choose the unit you want. To confirm, press ↵. Note: This only shows the available units. The value of these units is not converted.

BAR (1.4.2.3.1.3.1)

KPA (1.4.2.3.1.3.2)

PSI (1.4.2.3.1.3.3)

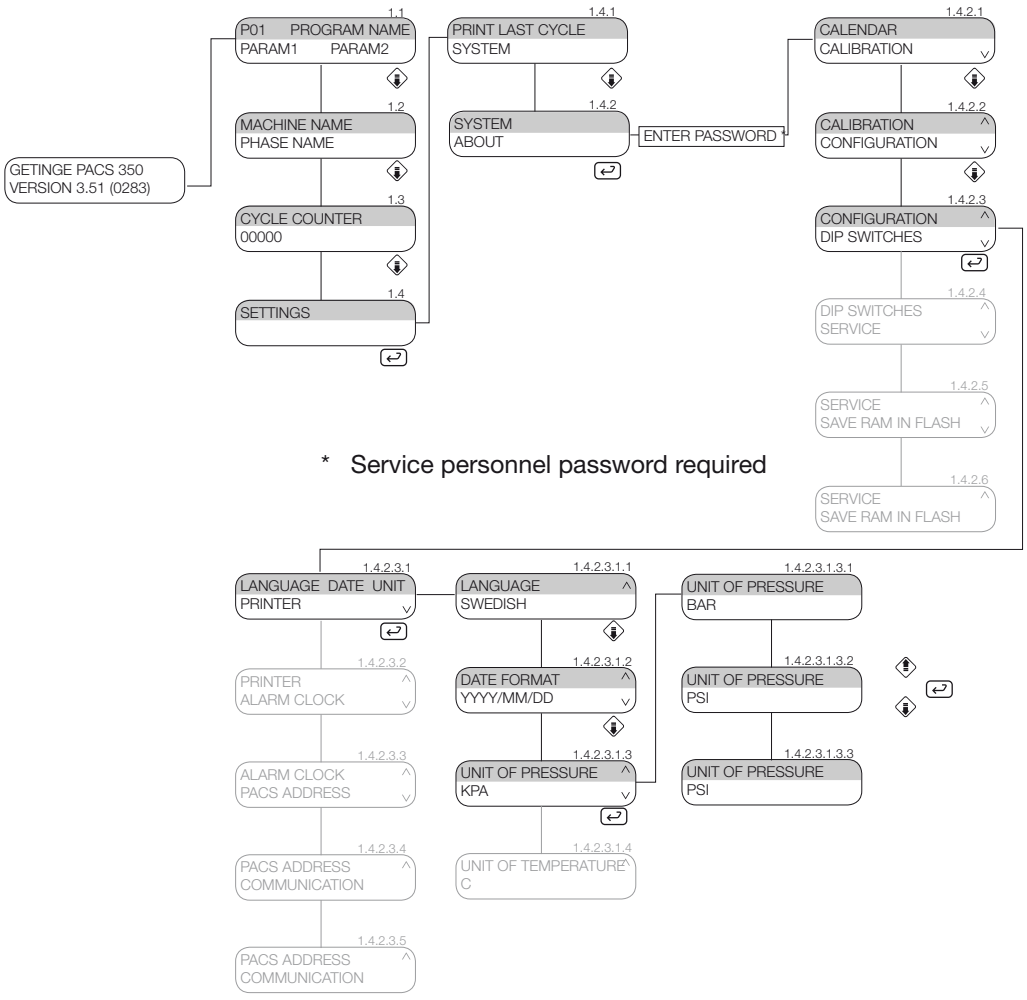

Downloaded from www.Manualslib.com manuals search engine

Unit of temp menu (1.4.2.3.1.4)

There is a choice of two units of temperature. Press ↵ to see the two units. Choose the unit you want to use and press ↵ to confirm.

Note: This only shows the available units. The value of these units is not converted.

Celsius. (1.4.2.3.1.4.1)

Fahrenheit. (1.4.2.3.1.4.2)

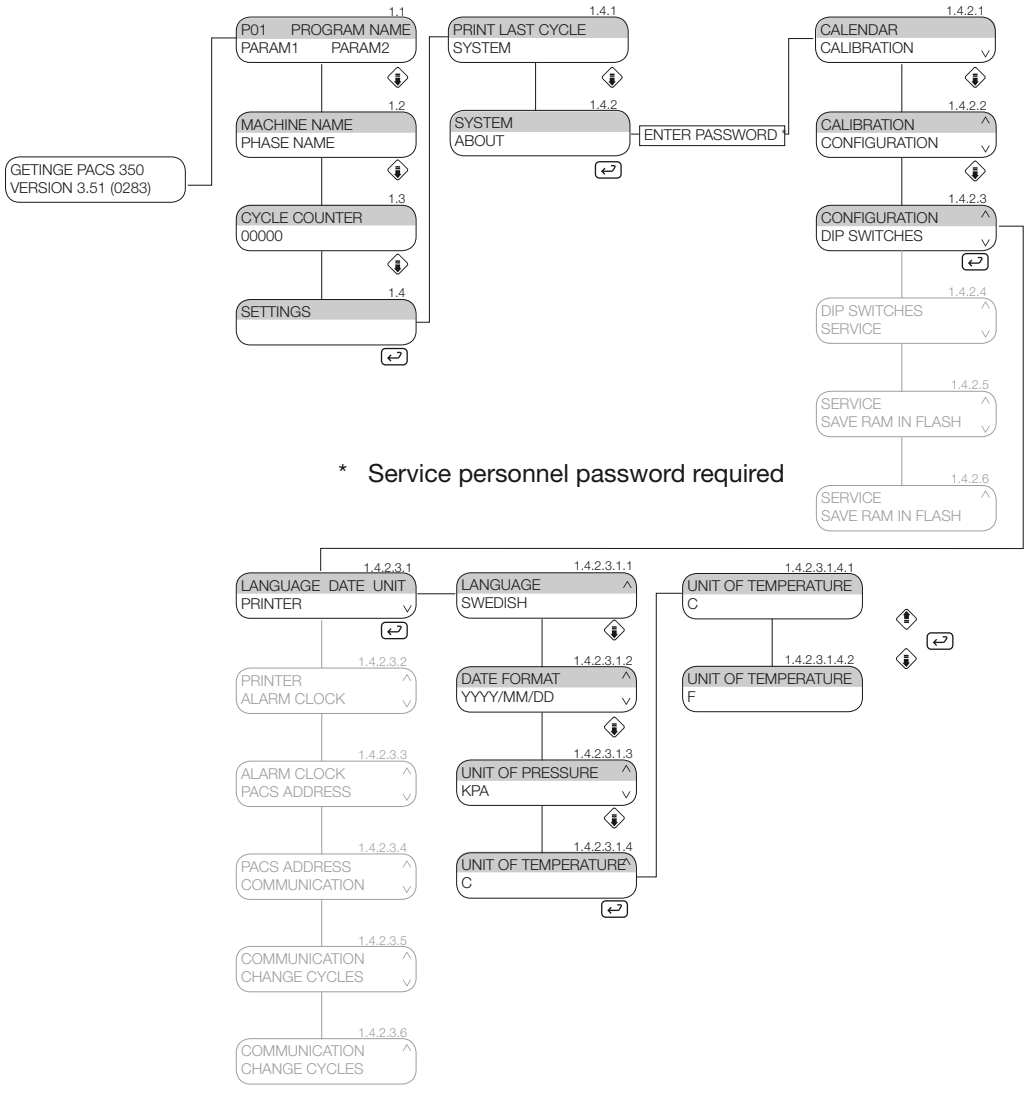

Downloaded from www.Manualslib.com manuals search engine

GETINGE

Printer menu (1.4.2.3.2)

All settings for printer and logs are made in this section. There are four submenus:

Printer mode.	(1.4.2.3.2.1)
Slow interval	(1.4.2.3.2.2)
Fast interval	(1.4.2.3.2.3)
Printer transfer speed.	(1.4.2.3.2.4)

Print mode menu (1.4.2.3.2.1)

This menu has only one option. Only process values are printed out.

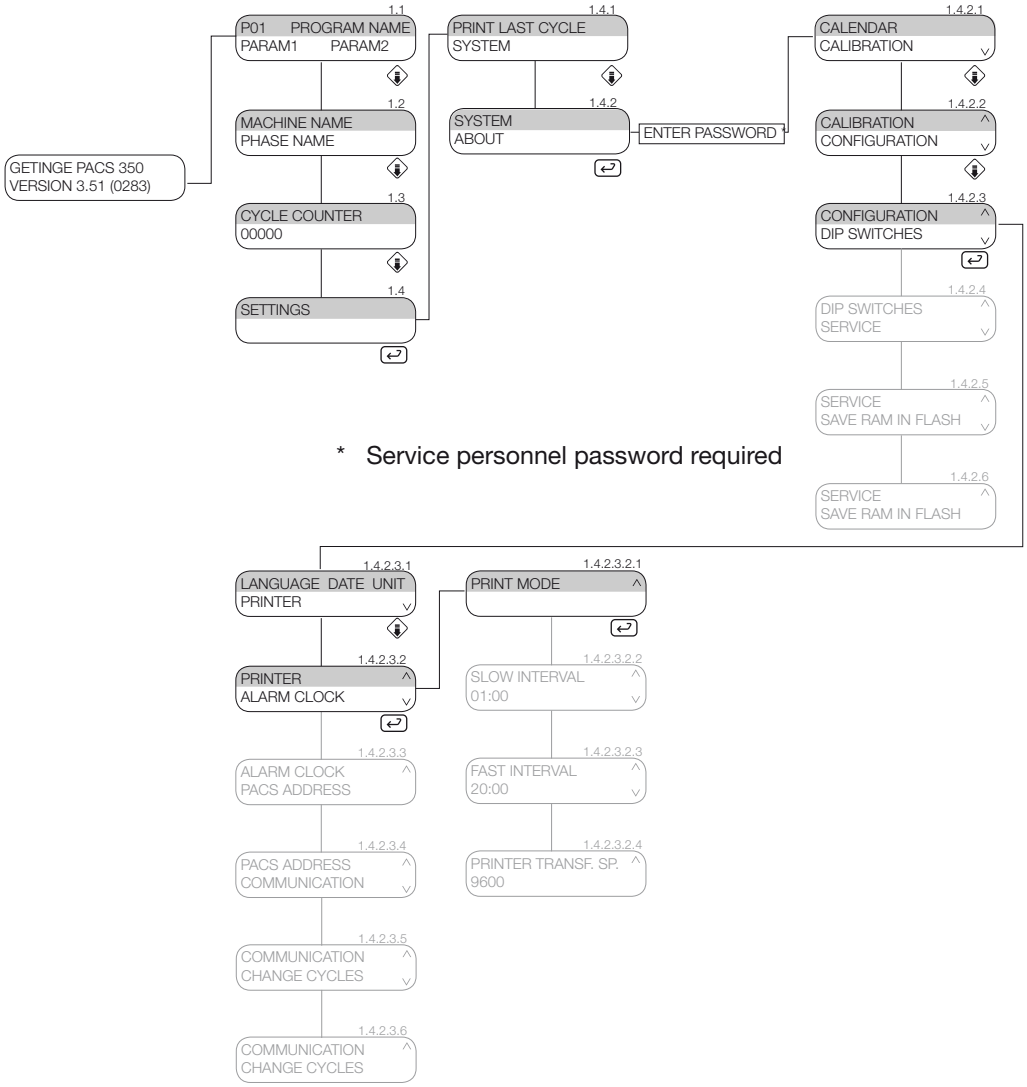

Downloaded from www.Manualslib.com manuals search engine

Slow interval menu(1.4.2.3.2.2)

The speed of the slow interval log times is shown here. The phases that use this time speed are pre-configured in the program for each phase.

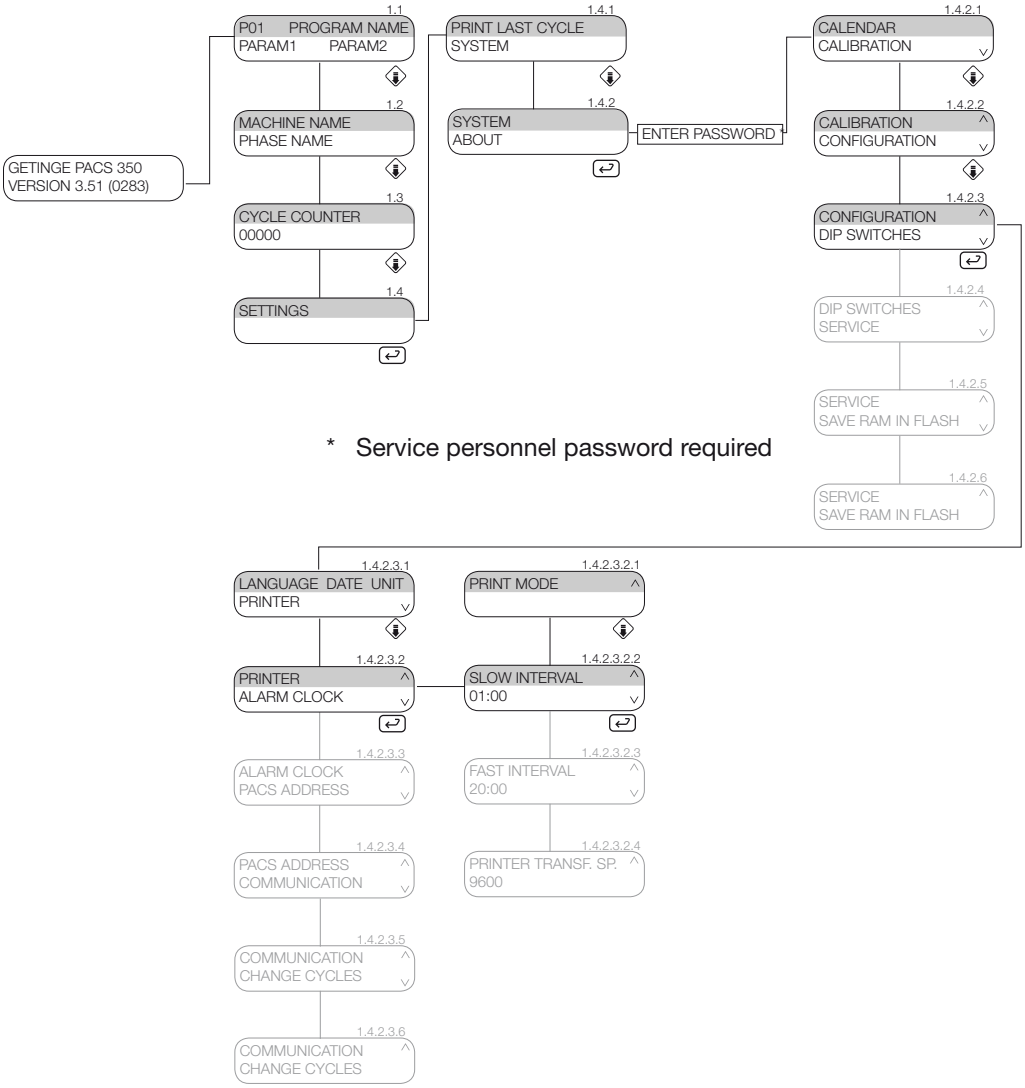

<Doc_TEC><Doc_502406700><Rel_B><Lang_GB>

Downloaded from www.Manualslib.com manuals search engine

GETINGE

Fast interval menu(1.4.2.3.2.3)

The speed of the fast interval log times is shown here. The phases that use this time speed are pre-configured in the program for each phase.

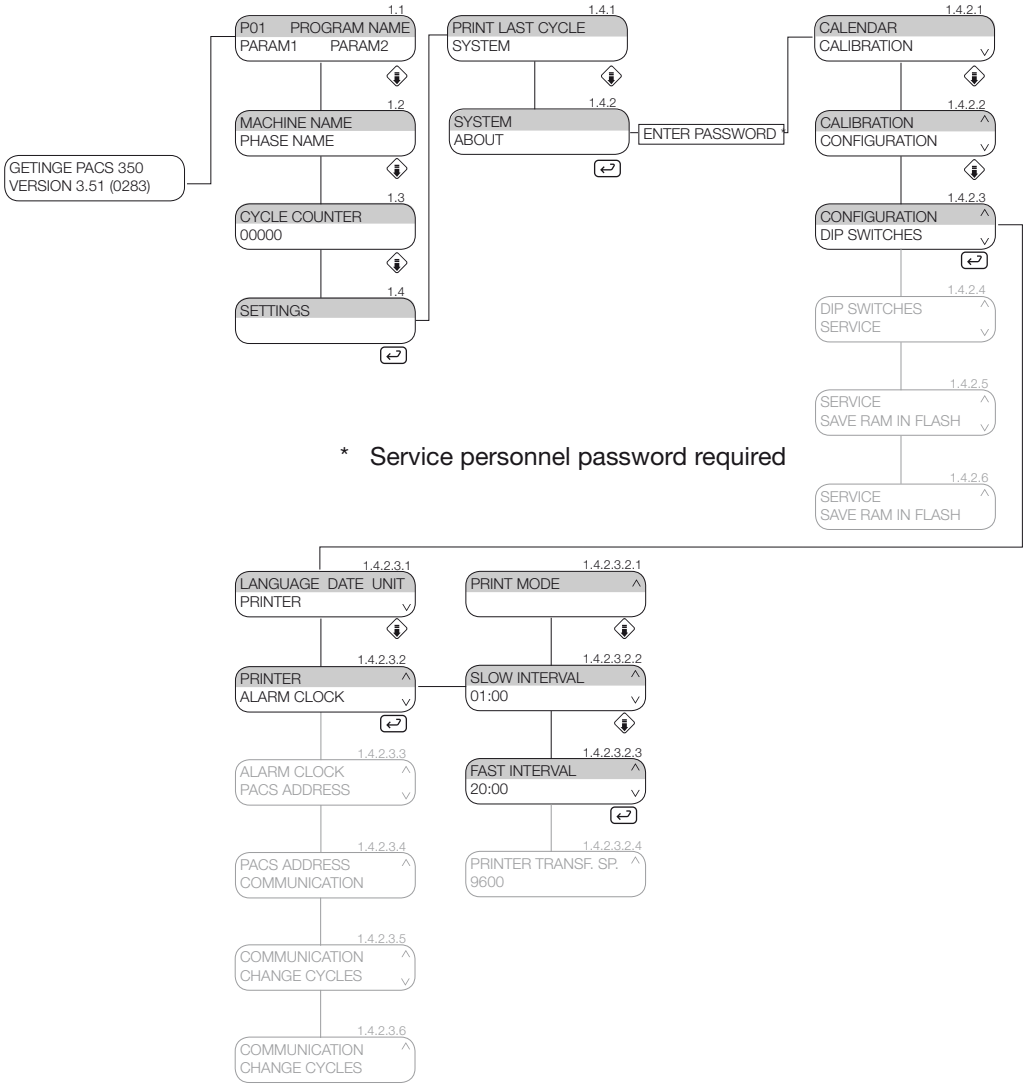

Downloaded from www.Manualslib.com manuals search engine

Transfer speed menu (1.4.2.3.2.4)

You can choose the transfer speed for the printer in this menu. There are four transfer speeds:

1200. (1.4.2.3.2.4.1)

2400. (1.4.2.3.2.4.2)

4800. (1.4.2.3.2.4.3)

9600. (1.4.2.3.2.4.4)

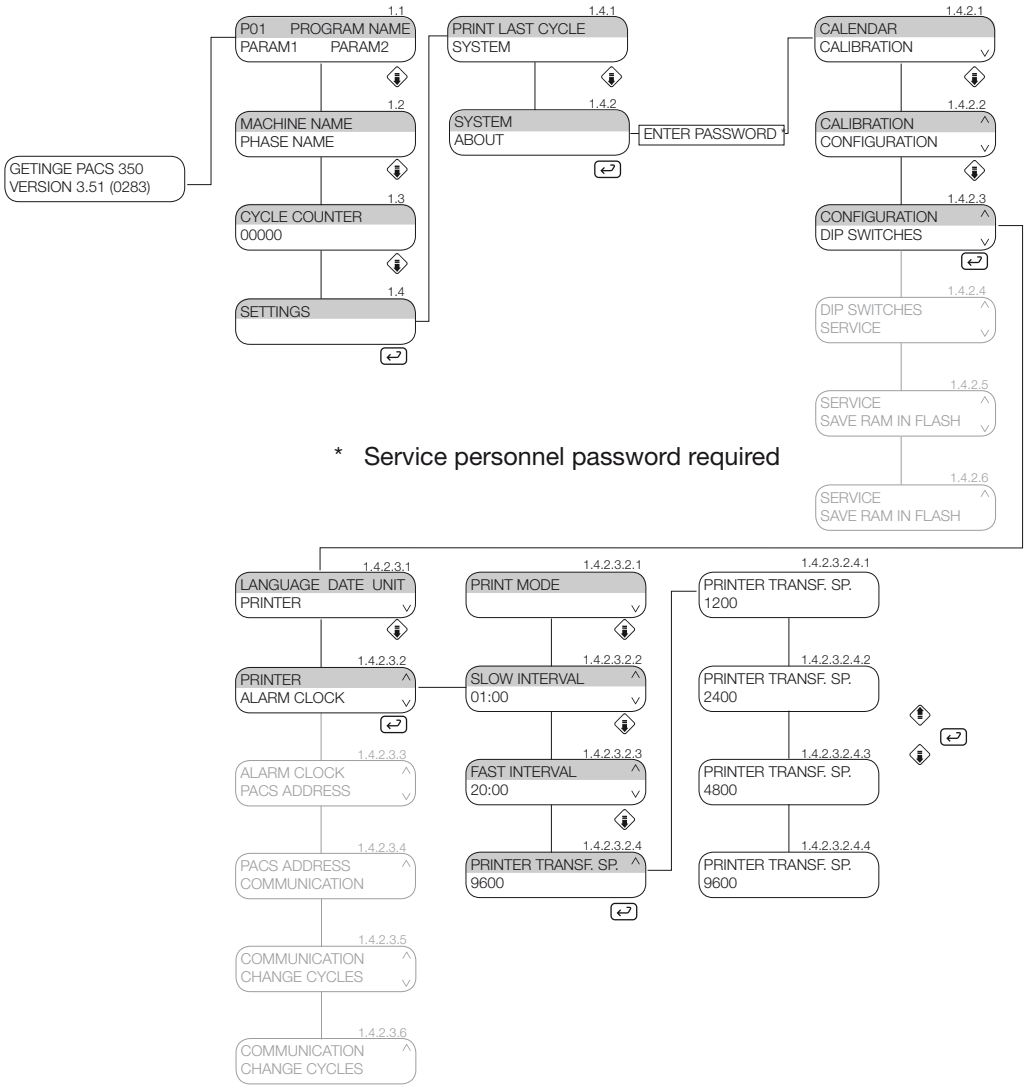

Alarm clock menu (1.4.2.3.3)

This function is not used on this machine.

<Doc_TEC><Doc_502406700><Rel_B><Lang_GB>

Downloaded from www.Manualslib.com manuals search engine

GETINGE

PACS address menu (1.4.2.3.4)

The node address for PACS is entered in this menu.

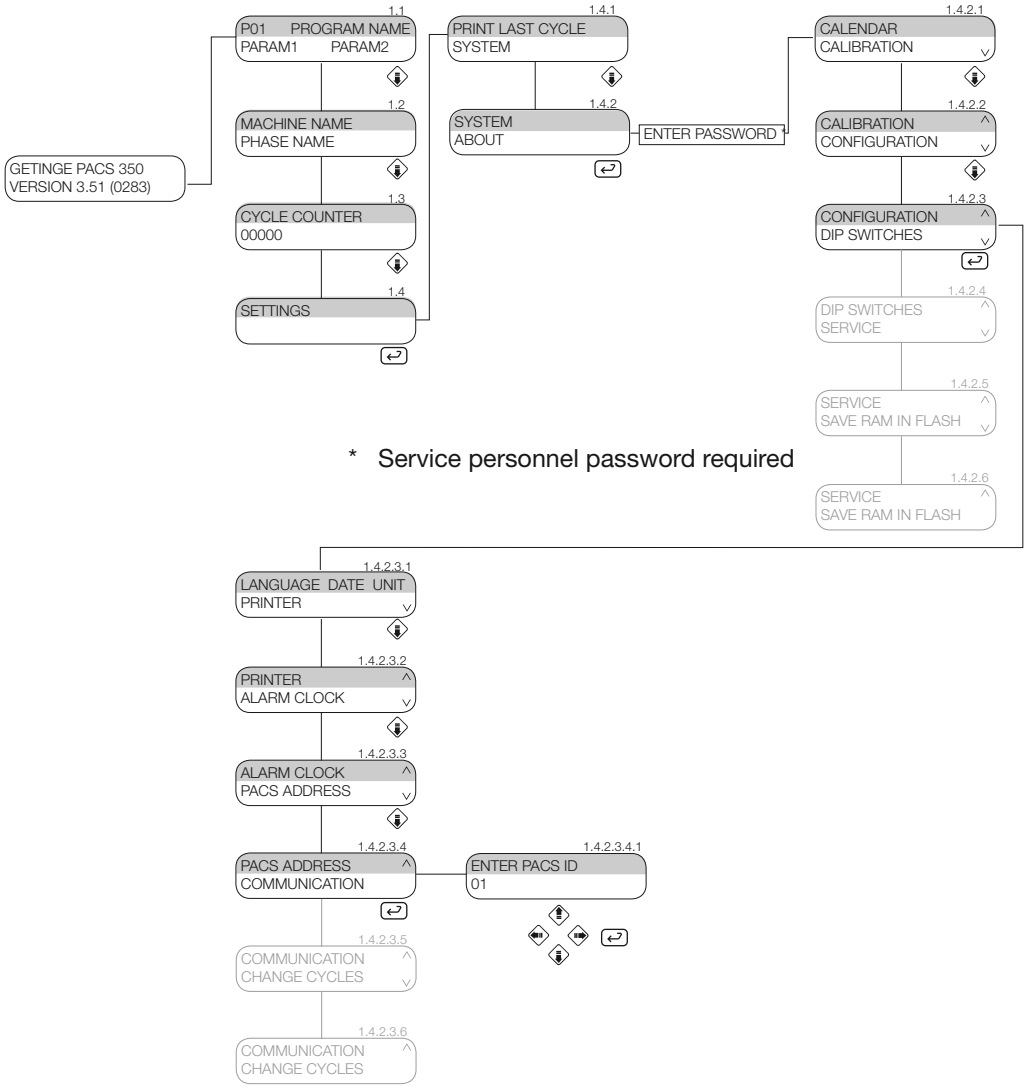

Downloaded from www.Manualslib.com manuals search engine

Communication settings COM0 (1.4.2.3.5.1)

Protocol type and communication mode are entered in this menu.

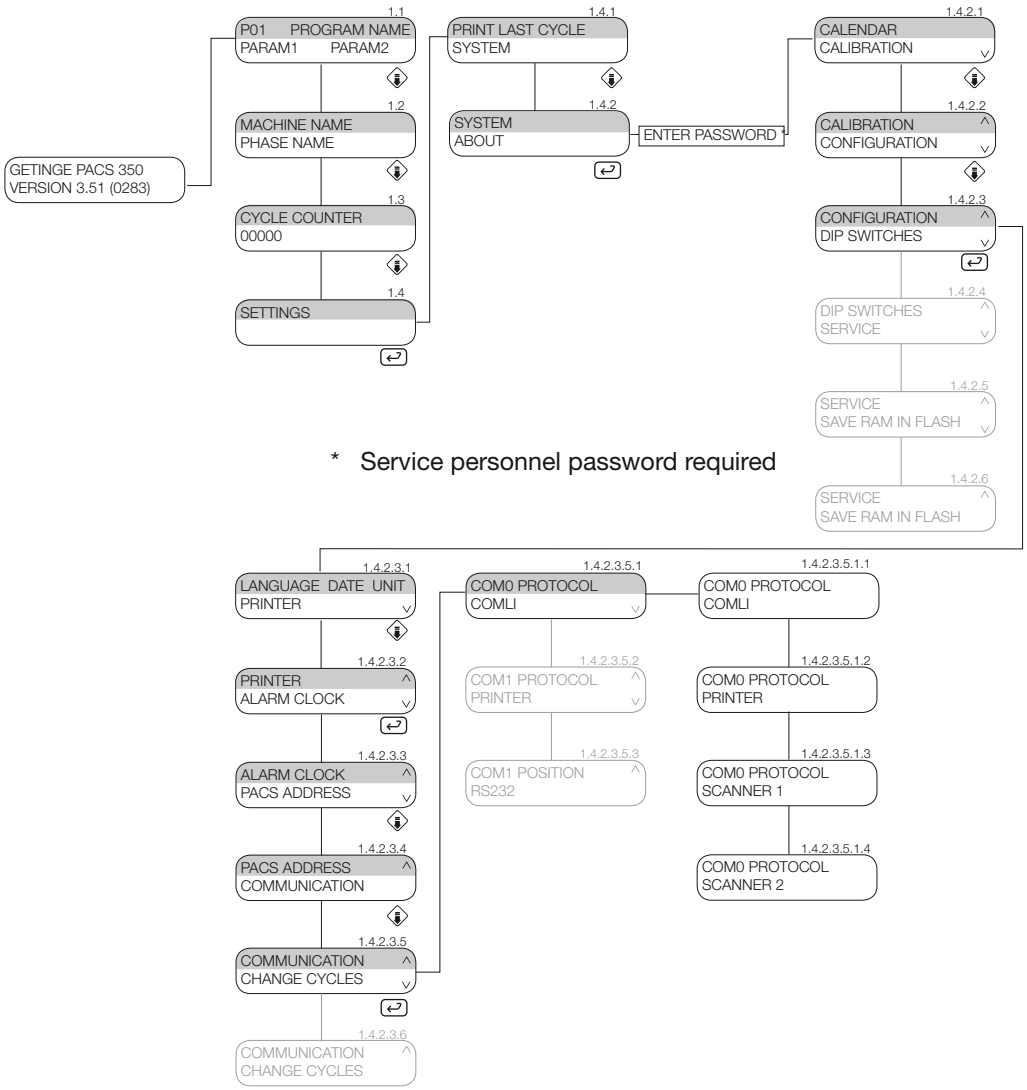

Table

Com 1 protocol	For PC connection and T-Doc
Printer	For printer connection
Scanner 1	Handheld scanner connected
Scanner 2	Fixed scanner connected

Downloaded from www.Manualslib.com manuals search engine

GETINGE

Communication settings COM1 (1.4.2.3.5.2)

Protocol type is entered in this menu.

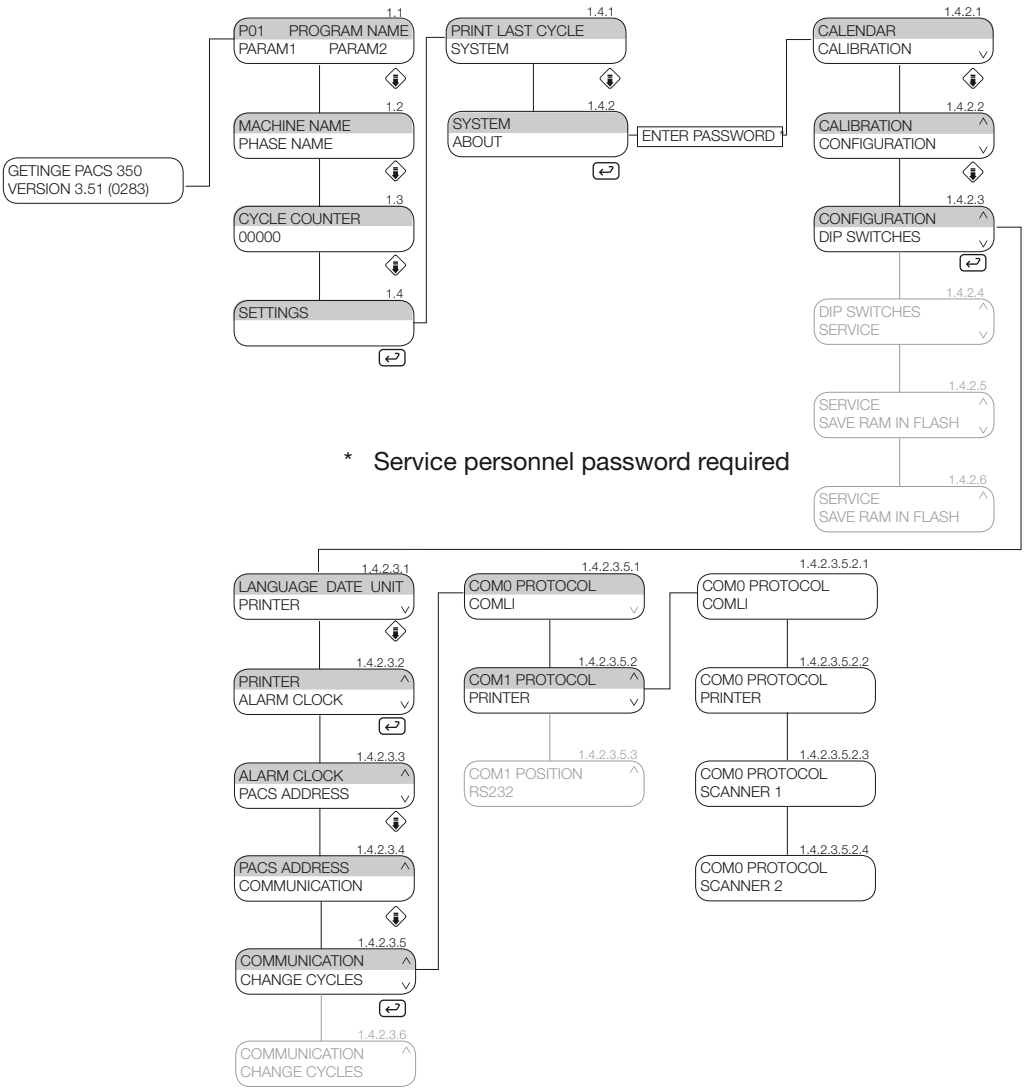

Table

Com 1 protocol	For PC connection and T-Doc
Printer	For printer connection
Scanner 1	Handheld scanner connected
Scanner 2	Fixed scanner connected

Downloaded from www.Manualslib.com manuals search engine

Communication mode COM2 (1.4.2.3.5.3)

Protocol type is entered in this menu.

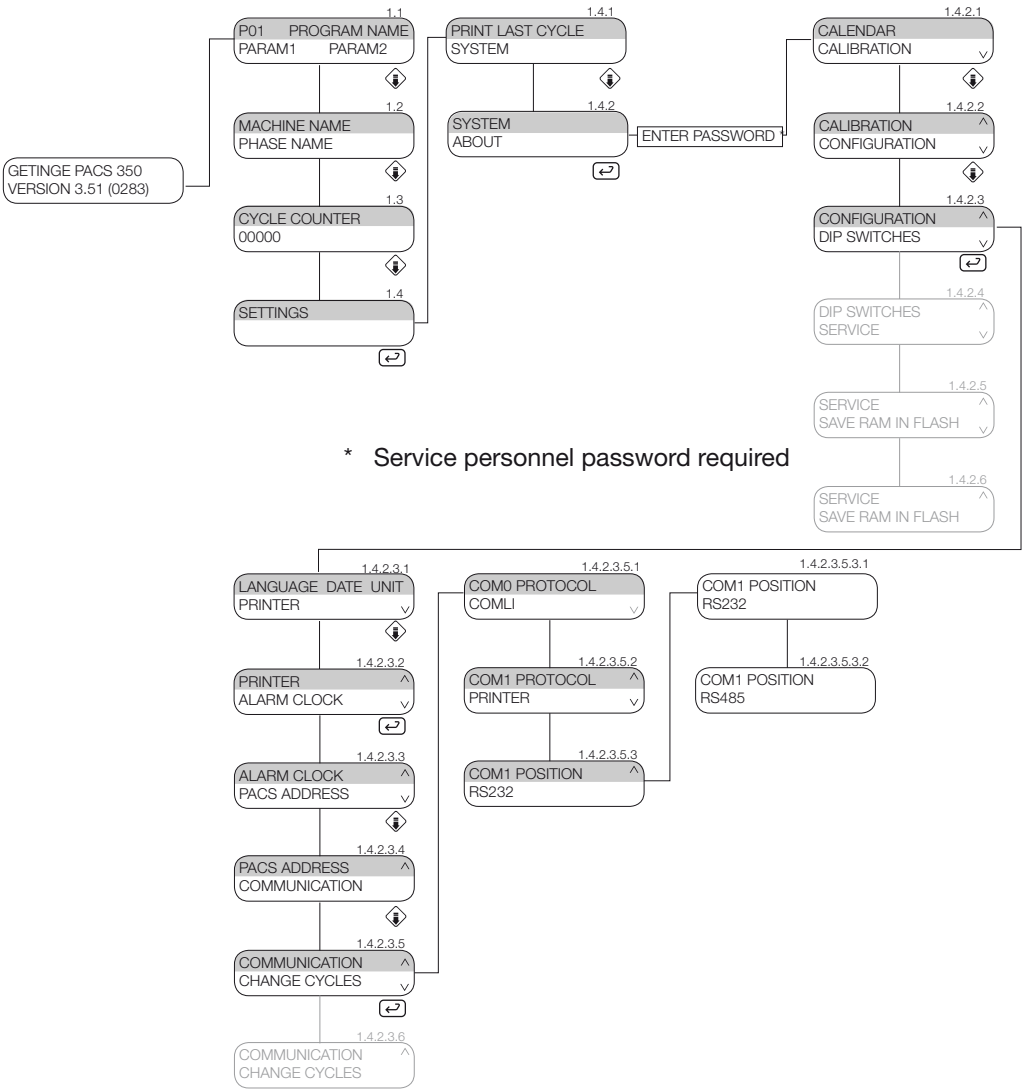

* Service personnel password required

Table

RS232	PC connected
RS485	T-Doc connected

<Doc_TEC><Doc_502406700><Rel_B><Lang_GB>

Downloaded from www.Manualslib.com manuals search engine

GETINGE

Change cycles (1.4.2.3.6.1)

Protocol type is entered in this menu.

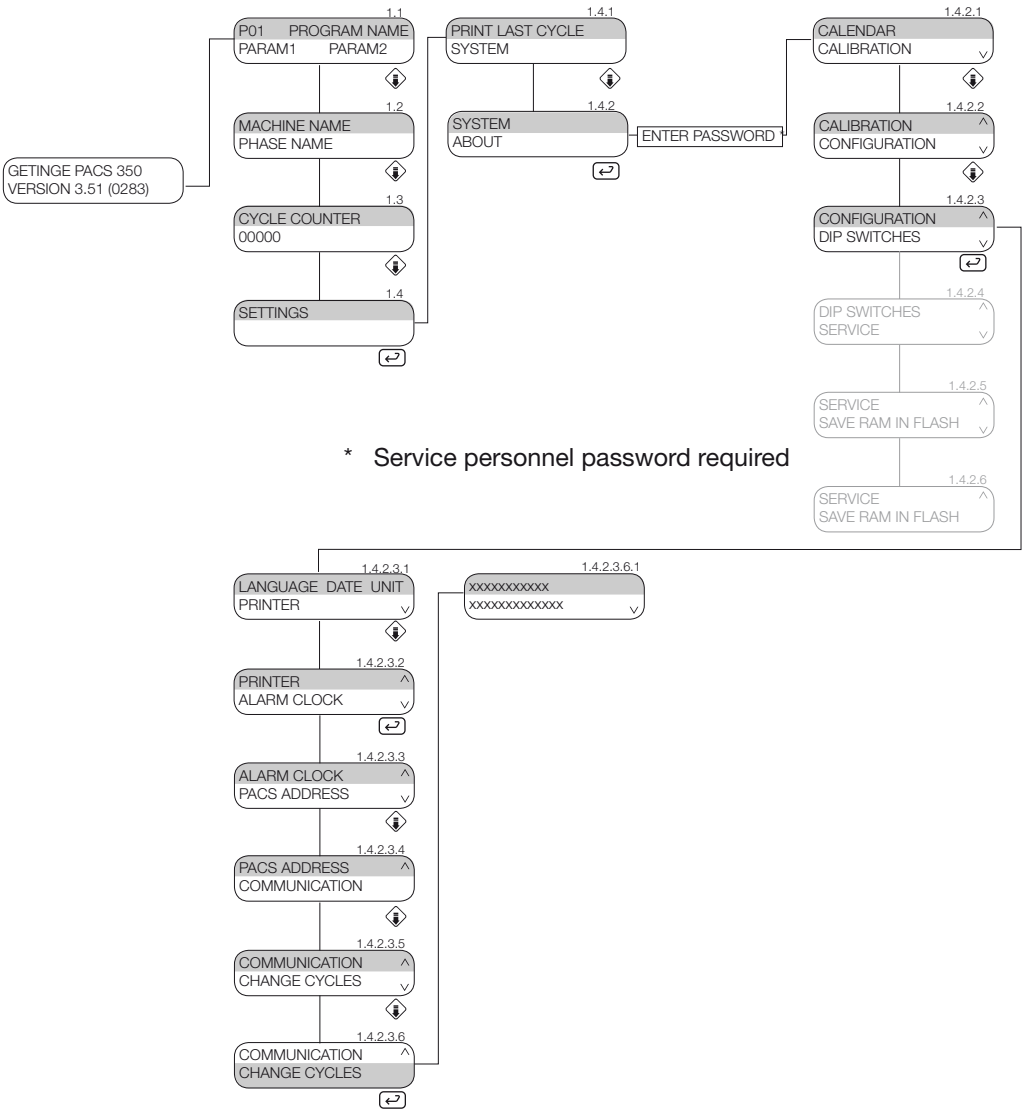

Downloaded from www.Manualslib.com manuals search engine

DIP switch menu (1.4.2.4)

The DIP switches are used to switch various options on and off. The various options are pre-configured in the program. There are 16 DIP switches in all. See Section 2.3.1

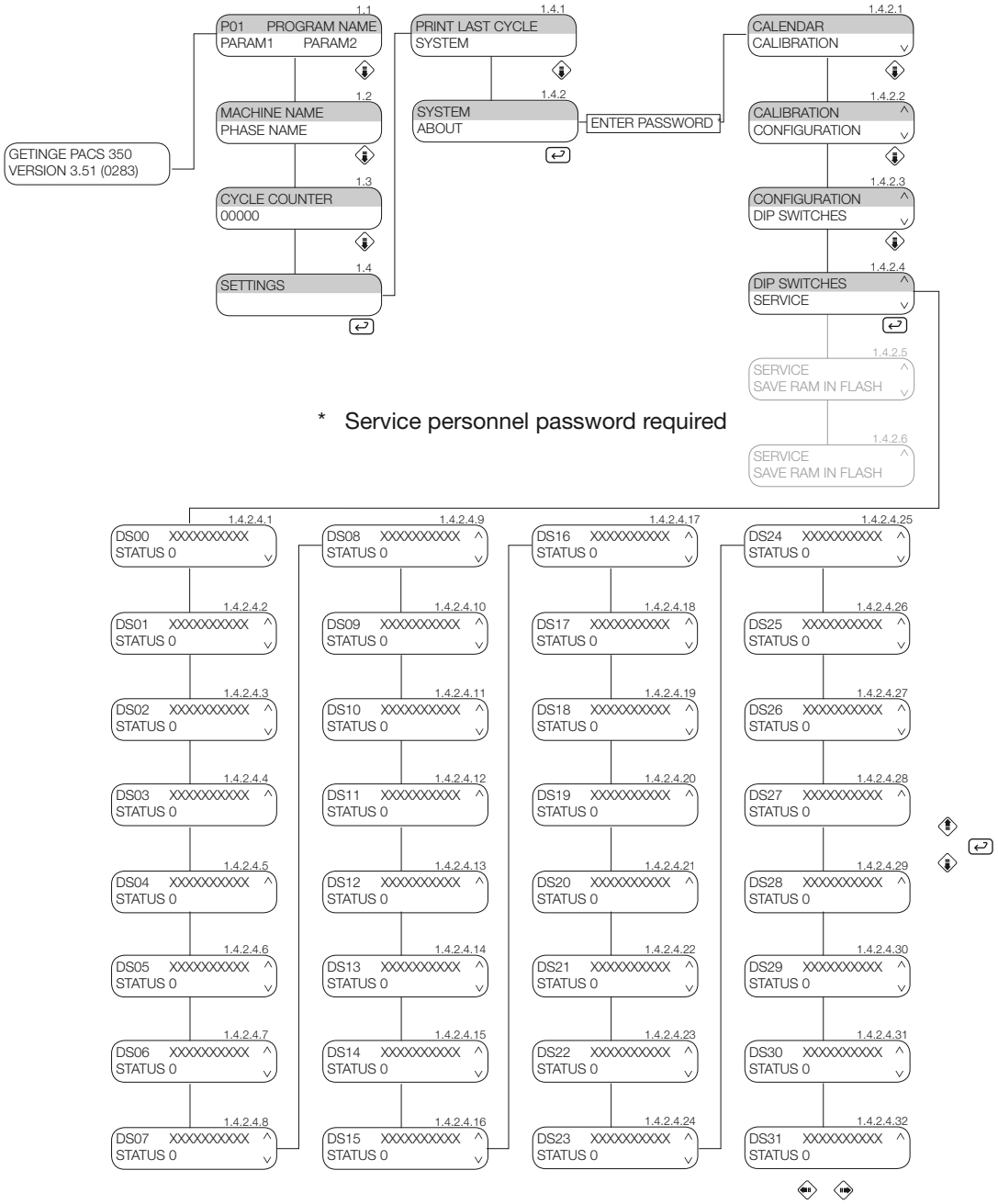

Table

DS00	Machine with only one door.	DS08	Flow metering #4	DS16	XXXXXXXXXX	DS24	XXXXXXXXXX
DS01	Opens the door when the cycle is complete.	DS09	Conductivity measurement	DS17	XXXXXXXXXX	DS25	XXXXXXXXXX
DS02	Distilled water	DS10	AGS loader, soiled side	DS18	XXXXXXXXXX	DS26	XXXXXXXXXX
DS03	Dosing pump #3	DS11	AGS unloader, clean side	DS19	XXXXXXXXXX	DS27	XXXXXXXXXX
DS04	Dosing pump #4	DS12	Monitoring system	DS20	XXXXXXXXXX	DS28	Service messages
DS05	Flow metering #1	DS13	Scanner	DS21	XXXXXXXXXX	DS29	A_0-Value
DS06	Flow metering #2	DS14	XXXXXXXXXX	DS22	XXXXXXXXXX	DS30	PC washing log
DS07	Flow metering #3	DS15	XXXXXXXXXX	DS23	XXXXXXXXXX	DS31	Loop running

<Doc_TEC><Doc_502406700><Rel_B><Lang_GB>

Downloaded from www.Manualslib.com manuals search engine

GETINGE

Service menu (1.4.2.5)

The service menu shows the various fault messages, service messages and diagnostics.

Fault log.	(1.4.2.5.1)
Service messages.	(1.4.2.5.2)
Diagnostics.	(1.4.2.5.3)

Fault log menu (1.4.2.5.1)

The last 20 fault messages are displayed. The faults are confirmed with the Enter button on the PACS. You can find the fault messages in Section 3.

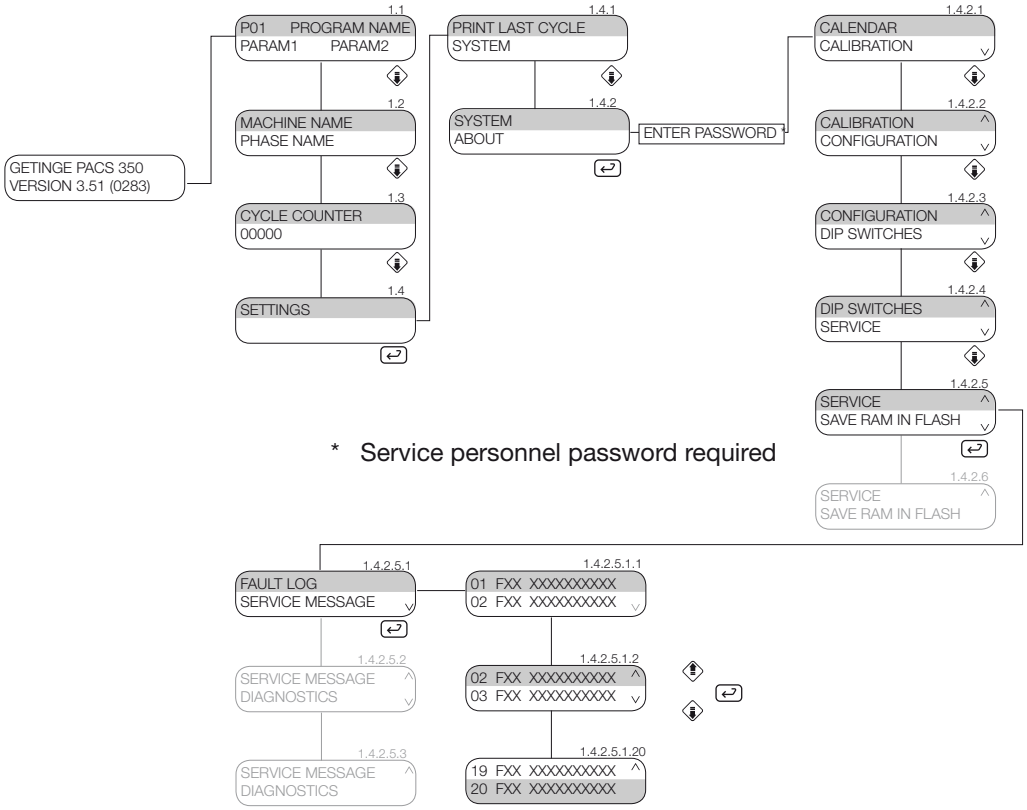

Downloaded from www.Manualslib.com manuals search engine

Service message menu (1.4.2.5)

Service messages attract the operator's attention if something needs to be done. You can find service messages in Section 3.

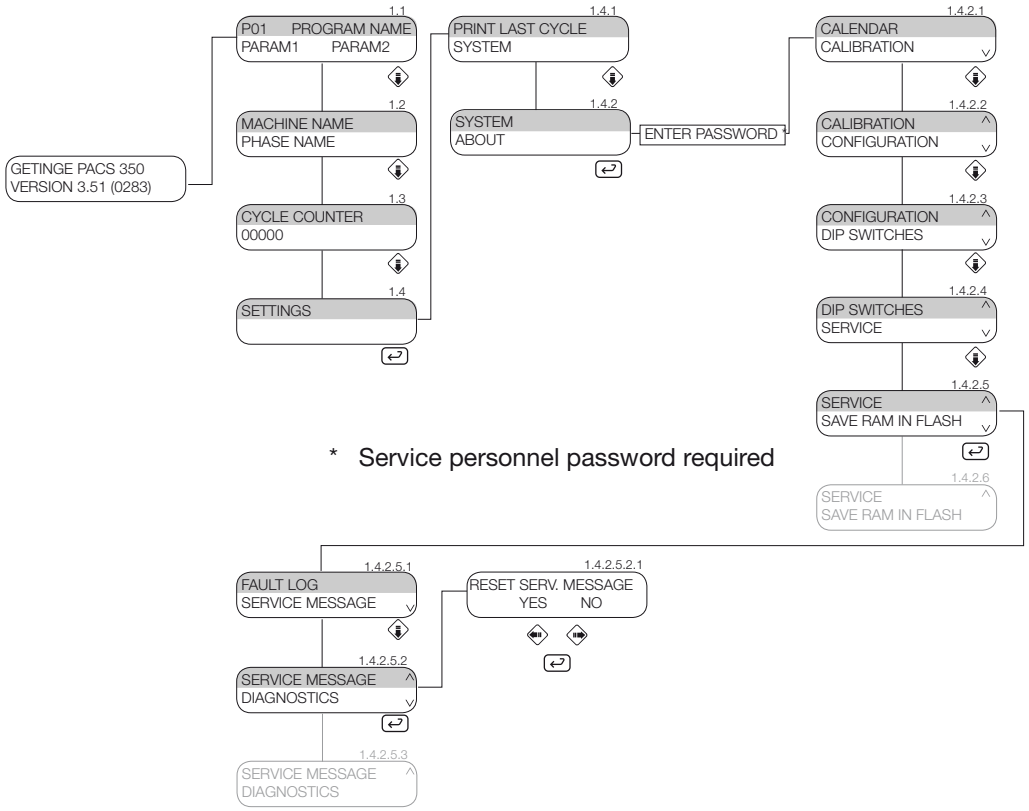

Diagnostics menu (1.4.2.5.3)

The diagnostics menu is used to test input and output data and flags. There are eight submenus:

Test analog in.	(1.4.2.5.3.1)
Test analog out.	(1.4.2.5.3.2)
Test digital in.	(1.4.2.5.3.3)
Test digital out.	(1.4.2.5.3.4)
Test user flag	(1.4.2.5.3.5)
Test system flag	(1.4.2.5.3.6)
Test printer.	(1.4.2.5.3.7)
Test LED and buzzer.	(1.4.2.5.3.8)

<Doc_TEC><Doc_502406700><Rel_B><Lang_GB>

Downloaded from www.Manualslib.com manuals search engine

GETINGE

Test analog in menu (1.4.2.5.3.1)

These values are read-only. The status of various input data is displayed. The various input data are pre-configured in the program. To see the various analog input data, see Section 4.

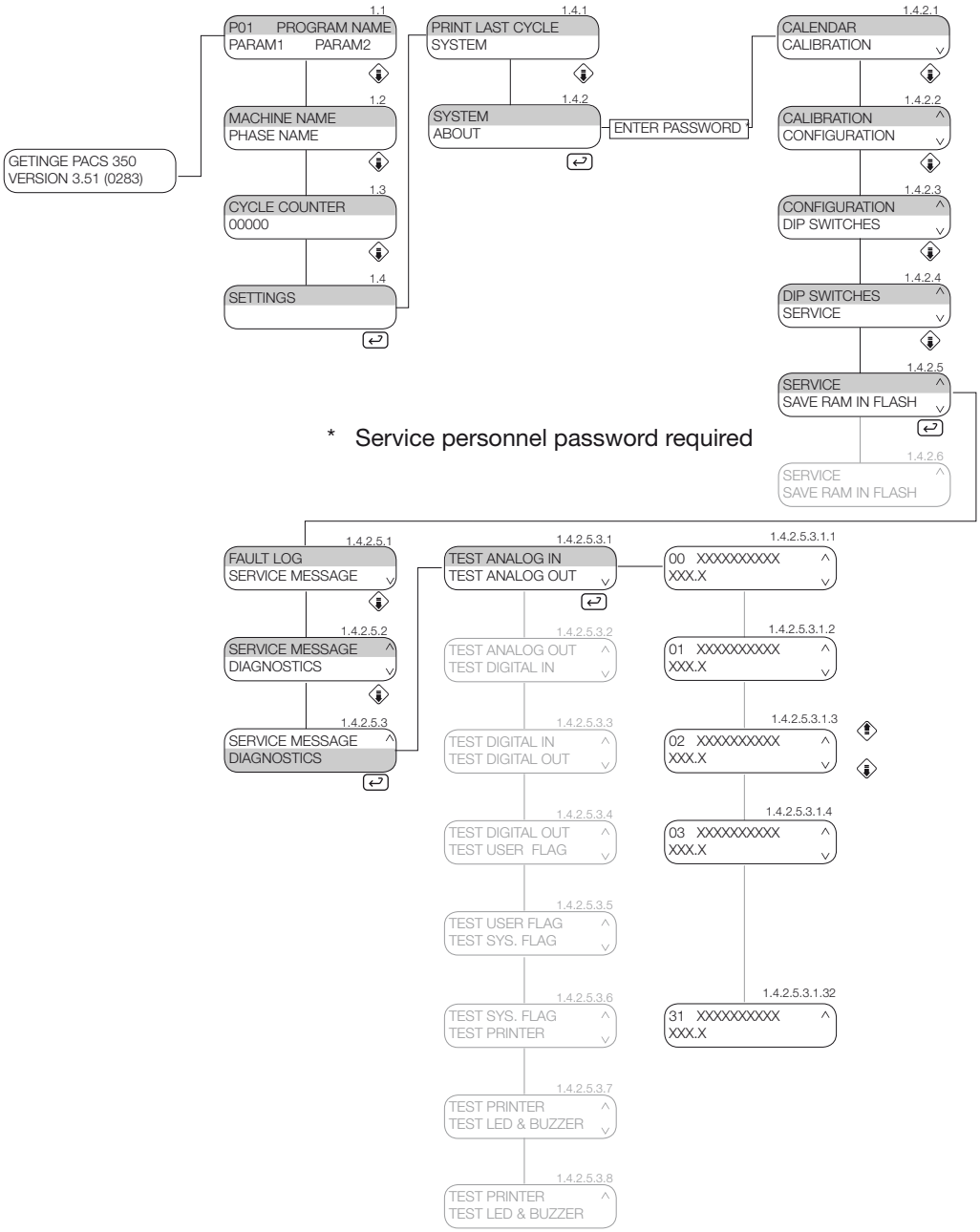

<Doc_TEC><Doc_502406700><Rel_B><Lang_GB>

Downloaded from www.Manualslib.com manuals search engine

Test analog out menu (1.4.2.5.3.2)

These values can be read and written. The status of various input data is displayed. Every item of output data can be set to manual mode and a value can be set for the output. The various items of output data are pre-configured in the program. To see the various items of analog output data, see Section 4.

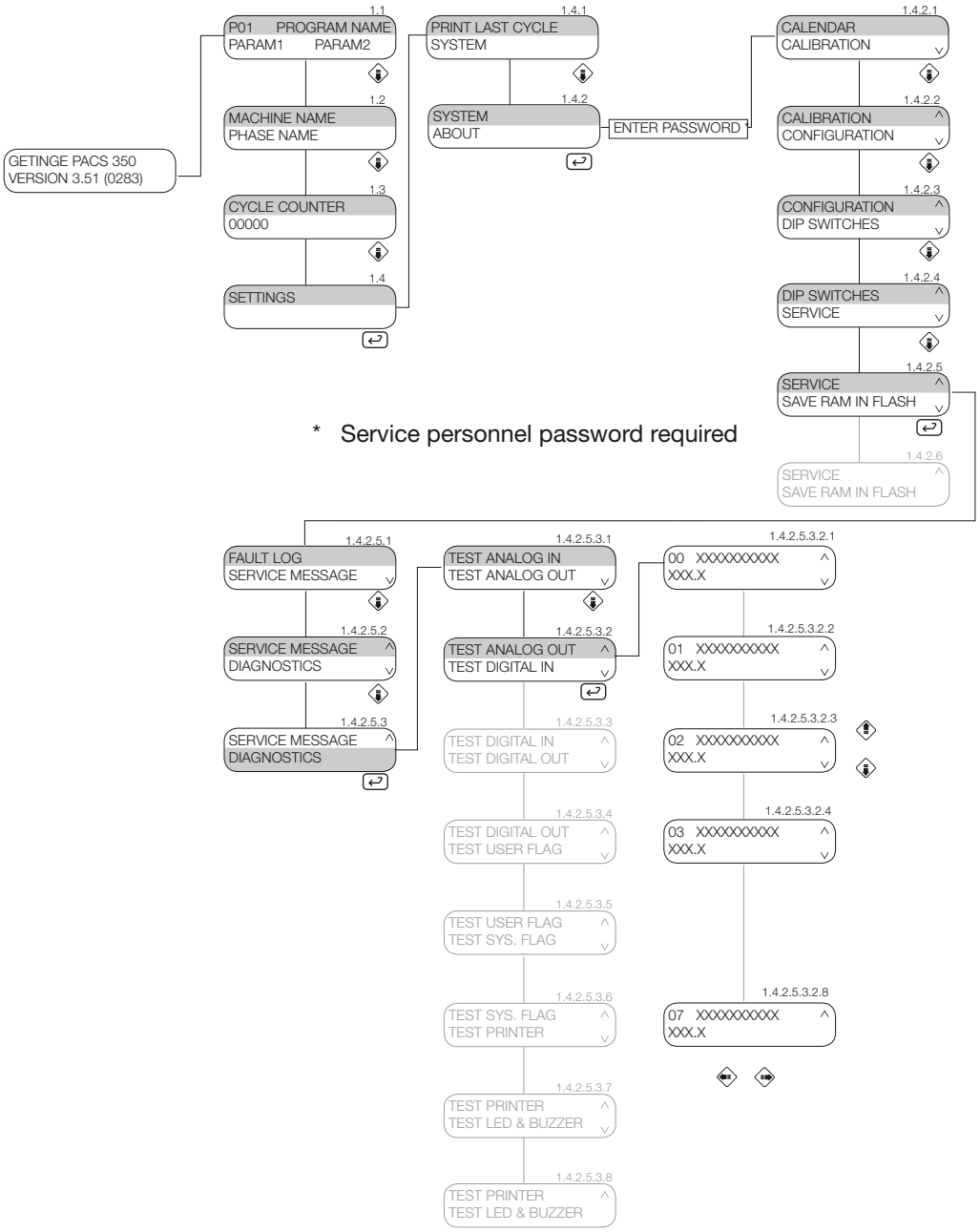

Fan

0%	speed 0
25%	speed 1
50%	speed 2
100%	speed 3

<Doc_TEC><Doc_502406700><Rel_B><Lang_GB>

Downloaded from www.Manualslib.com manuals search engine

GETINGE

Test digital in menu (1.4.2.5.3.3)

These values are read-only. The status of various input data is displayed. The various items of output data are pre-configured in the program. To see the various digital input data, see Section 4.

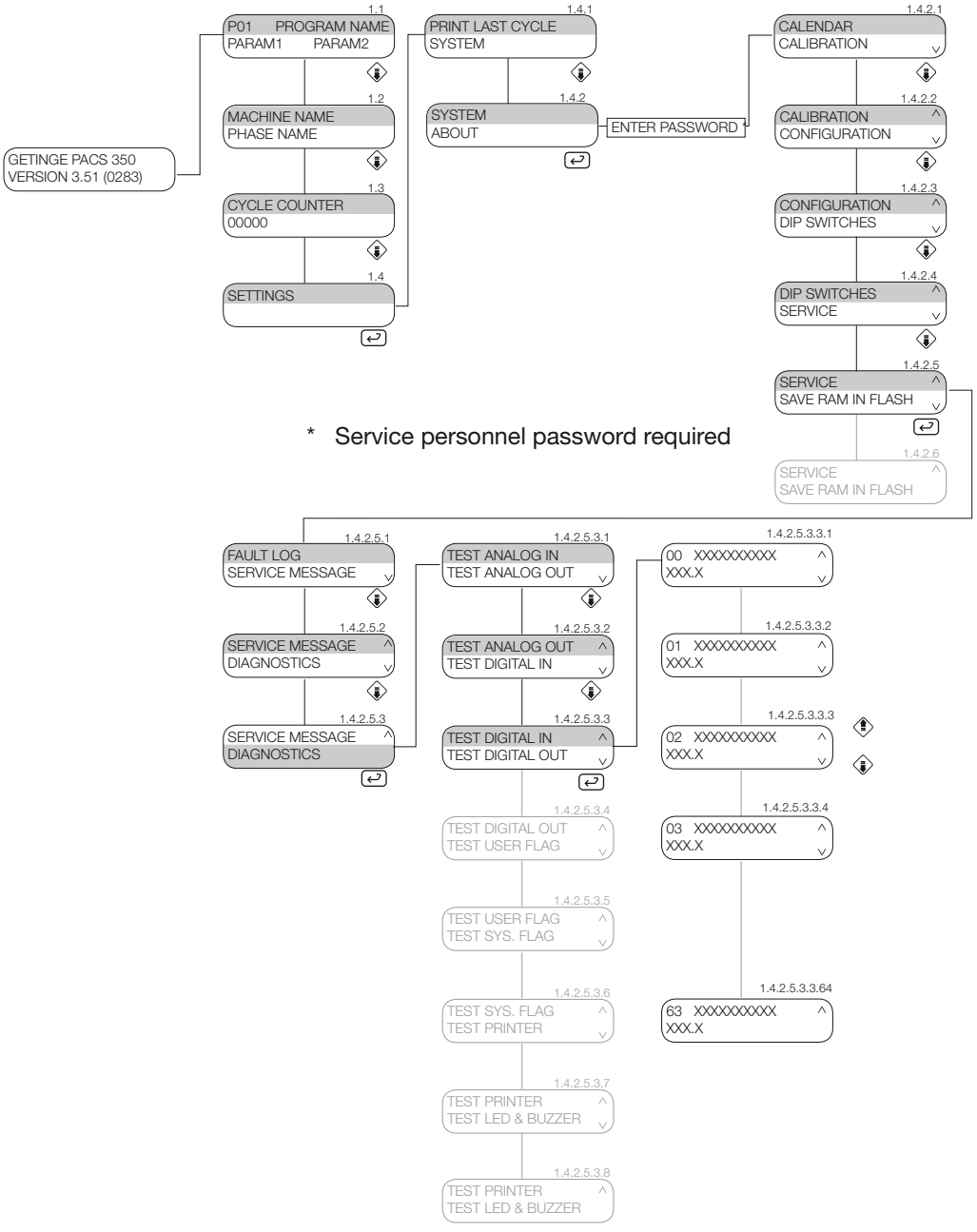

Downloaded from www.Manualslib.com manuals search engine

Test digital out menu (1.4.2.5.3.4)

These values can be read and written. The status of various output data is displayed. Every item of output data can be set to manual mode and switched on and off. The various items of output data are pre-configured in the program. To see the various digital output data, see Section 4.

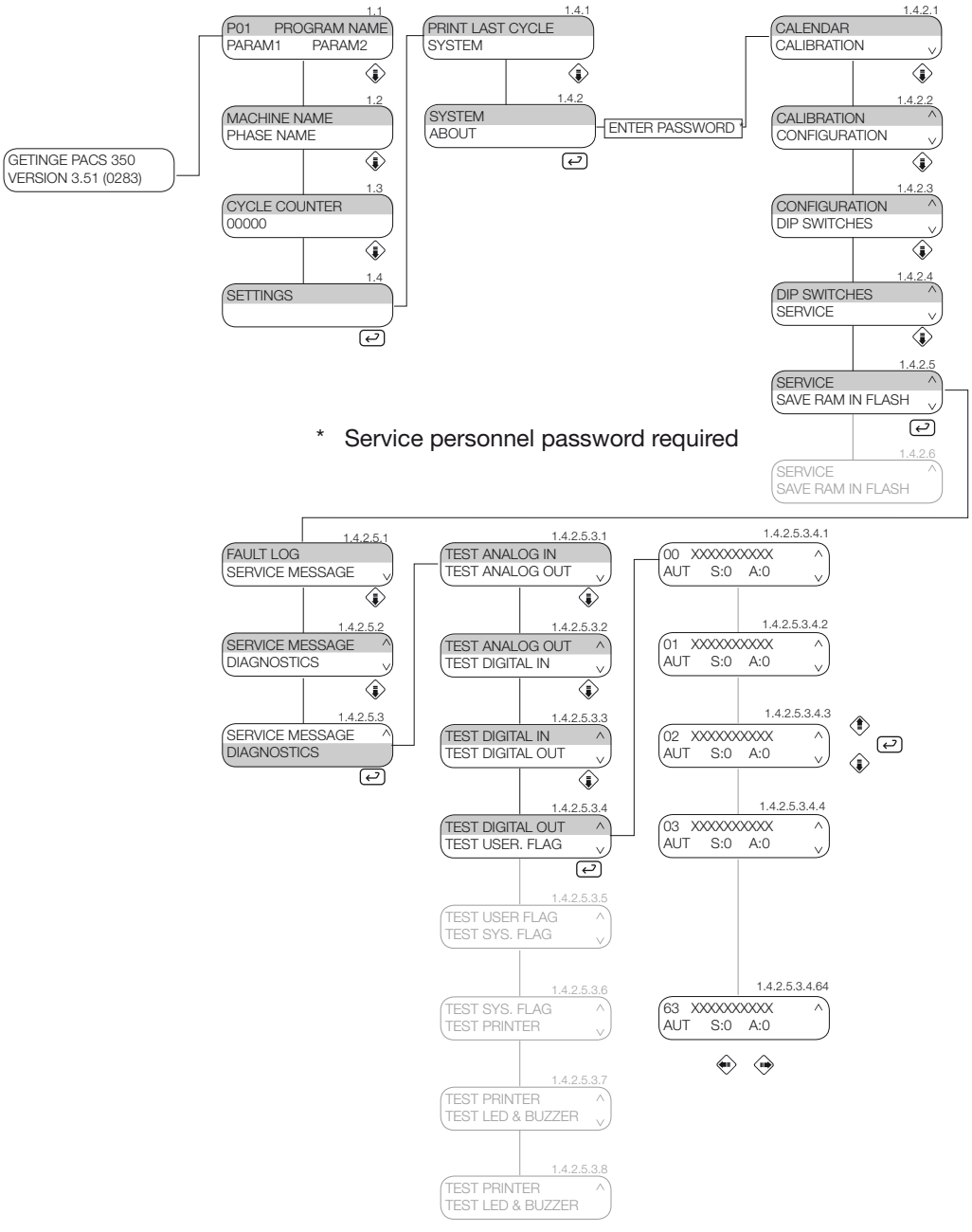

<Doc_TEC><Doc_502406700><Rel_B><Lang_GB>

Downloaded from www.Manualslib.com manuals search engine

GETINGE

Test user flag menu (1.4.2.5.3.5)

These values are read-only. The status of each flag is displayed. The various flags are preconfigured in the program.

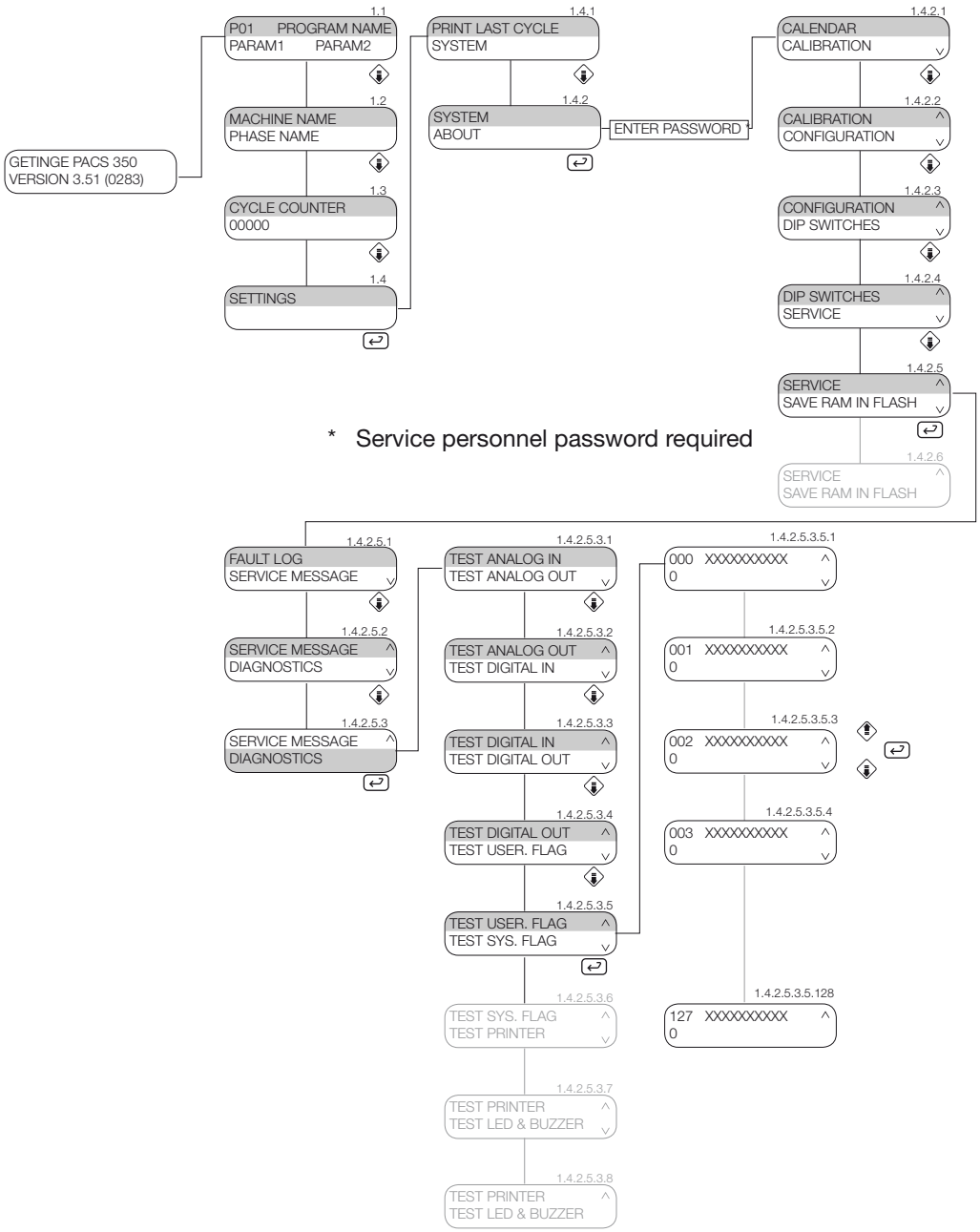

Downloaded from www.Manualslib.com manuals search engine

Test printer (1.4.2.5.3.7)

During the printer test, the printer prints characters on the paper.

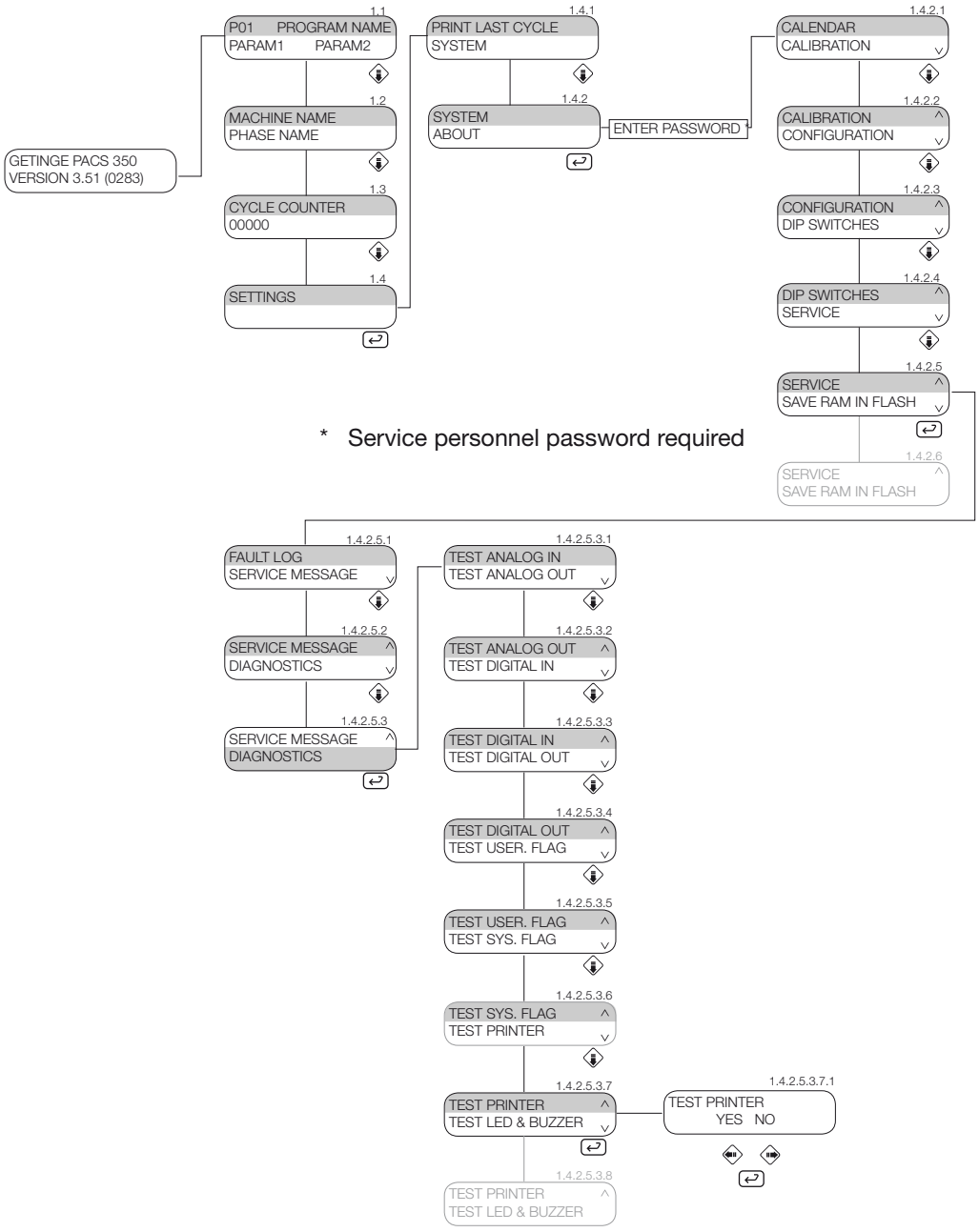

<Doc_TEC><Doc_502406700><Rel_B><Lang_GB>

Downloaded from www.Manualslib.com manuals search engine

GETINGE

Test LED/buzzer display (1.4.2.5.3.8)

During the test, all LEDs light up and the buzzer sounds.

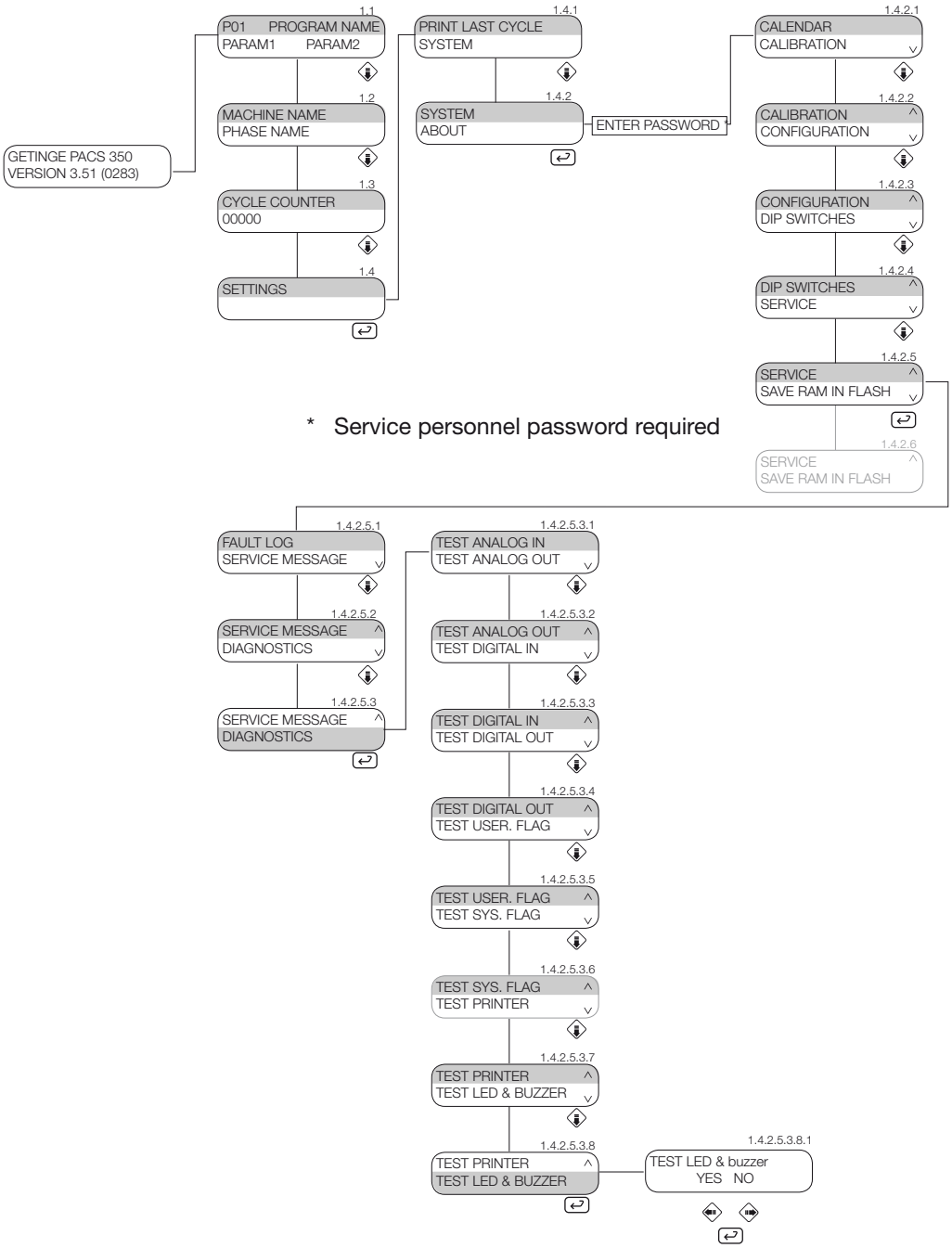

Downloaded from www.Manualslib.com manuals search engine

Save RAM in flash menu (1.4.2.6)

The RAM memory has battery backup, but during a cold start PACS loads data from the flash memory to the RAM memory and all changes made since the last time data was saved are lost.

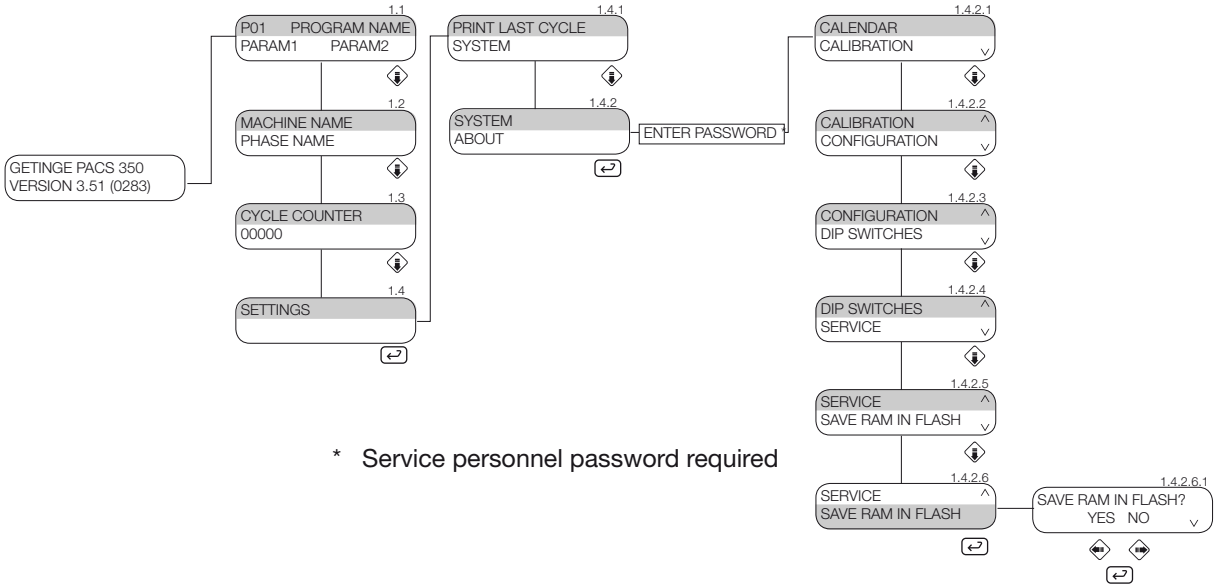

* Service personnel password required

Appliance info (1.4.3)

This menu shows the versions of the various program parts in PACS.

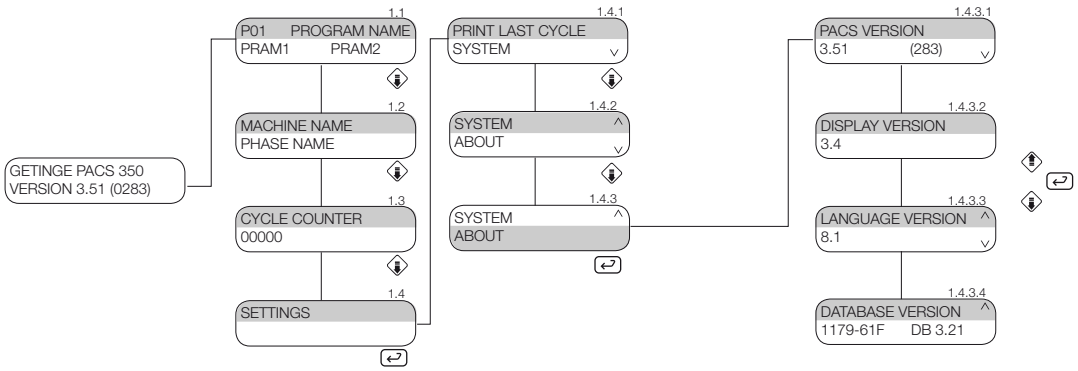

<Doc_TEC><Doc_502406700><Rel_B><Lang_GB>

Downloaded from www.Manualslib.com manuals search engine

A-parameters

Using the operator code, the following parameters (A-parameters) can be changed.

PH2100 WASHING 1

Parameters	Setting range
Washing temperature	40 - 92 °C
Washing time	0 - 900 s
Dosing amount	0 - 500 ml
Dosing temperature	20 - 85 °C

PH2101 WASHING 2

Parameters	Setting range
Washing temperature	40 - 92 °C
Washing time	0 - 900 s
Dosing amount	0 - 500 ml
Dosing temperature	20 - 85 °C

PH2020 NEUTRALIZING

Parameters	Setting range
Washing temperature	40 - 92 °C
Washing time	0 - 900 s
Dosing amount	0 - 500 ml
Dosing temperature	20 - 85 °C

PH2000 CHEMICAL DISINF

Parameters	Setting range
Chemical disinfection temperature	30 - 60 °C
Chemical disinfection time	0 - 900 s
Dosing amount	0 - 500 ml
Dosing temperature	20 - 85 °C

<Doc_TEC><Doc_502406700><Rel_B><Lang_GB>

Downloaded from www.Manualslib.com manuals search engine

PH3010 FINAL RINSE

Parameters	Setting range
Final rinse temperature	40 - 92 °C
Final rinse time	0 - 900 s
Dosing amount	0 - 500 ml
Dosing temperature	20 - 85 °C

PH4000 DRYING

Parameters	Setting range
Drying time	0 - 3600 s
Max chamber temperature	60 - 90 °C

Downloaded from www.Manualslib.com manuals search engine

P-parameters

Using any code down to the supervisor code, the following parameters (P-parameters) can be changed.

PH0000 STANDBY

Parameters	Setting range
Password	0 - 1
Booster standby	5 min - 1 hour
Chamber lighting	5 min - 1 hour

PH0001 START

Parameters	Setting range
Emptying time	0 - 60 s

PH1000 PRE-RINSE 1

Parameters	Setting range
Pre-rinsing time	0 - 600 s
Water type	CW, HW or CW + HW

PH1001 PRE-RINSE 2

Parameters	Setting range
Pre-rinsing time	0 - 600 s
Water type	CW, HW or CW + HW

PH1002 PRE-RINSE 3

Parameters	Setting range
Pre-rinsing time	0 - 600 s
Water type	CW, HW, CW + HW or none

PH2100 WASHING 1

Parameters	Setting range
Water type	CW, HW, CW + HW, DW or none
Dosing pump	1, 2, 3, 4

PH2101 WASHING 2

Parameters	Setting range
Water type	CW, HW, CW + HW, DW or none
Dosing pump	1, 2, 3, 4

PH2020 NEUTRALIZING

Parameters	Setting range
Water type	CW, HW, CW + HW, DW or none
Dosing pump	1, 2, 3, 4

Downloaded from www.Manualslib.com manuals search engine

PH2000 CHEMICAL DISINF

Parameters	Setting range
Water type	CW, HW, CW + HW, DW or none
Dosing pump	1, 2, 3, 4

PH3000 RINSE 1

Parameters	Setting range
Water type	CW, HW, CW + HW, DW or none
Rinse time	0 - 600 s

PH3001 RINSE 2

Parameters	Setting range
Water type	CW, HW, CW + HW, DW or none
Rinse time	0 - 600 s

PH3002 RINSE 3

Parameters	Setting range
Water type	CW, HW, CW + HW, DW or none
Rinse time	0 - 600 s

PH3010 FINAL RINSE

Parameters	Setting range
Conductivity	0 - 25
Conductivity measurement	0 - 1
Dosing pump	1, 2, 3, 4
Disinfection	0 - 1
Final rinse	0 - 1

PH4000 DRYING

Parameters	Setting range
Drying temperature	80 - 120 °C
Drying phase	0 - 1
Cooling time	0 - 1 h
Cooling temperature	60 - 95 °C

PH5000 Shutdown

Downloaded from www.Manualslib.com manuals search engine

GETINGE

PREVENTIVE MAINTENANCE

General

The required maintenance interval will depend largely on the quality of the incoming water, how often the machine is used and the nature of the goods to be sterilized. The maintenance interval will have to be determined in each individual case. We recommend that the stated maintenance operations are done at least at the specified intervals but once a year as a minimum. We also recommend that a function check is done once or twice a year.

Periodic maintenance

This may only be done by authorized personnel.

The machine is connected to the electricity supply and some components are live.

After installation, hose clips on the drain pump, circulation pump and booster pump must be retightened.
Check the drain valve and process valve for leaks once a month.

Component	Interval					
	Check yearly	Replace if necessary	Replace yearly	Replace every other year	Replace after 1000 hours	Replacement time
Door seal	•	•				1 hour
Hoses between dosing pump and detergent container	•			•		1 hour
Hose between dosing pump and machine	•			•		1 hour
Filter in incoming media	•	•				1 hour
Overheat protection	•	•				1 hour
Hose in hose pump	•	•		•		1 hour
Washer arm bearings	•	•				1 hour
Spray arm journals	•	•				
Sterile filter in dryer	•	•	•			2 hours
Hoses to dryer	•	•				2 hours
Check valve in dryer	•	•				1 hour
Fan to dryer	•	•				3 hours
Ink ribbon for printer	•	•				10 min
Crush protection on door closing	•	•				1 hour
Process valve diaphragm	•	•				
Diaphragm in drain valve	•	•				
Cleaning of waste tank	•					
Cooling fans and filters in electrical cabinets	•	•				
Steam hoses (replace every five years)	•					
Check hose couplings for leaks	•					
Check process valve for leaks	•					
Check drain valve for leaks	•					
Make sure that the power cables are firmly attached in their sockets.	•					

Downloaded from www.Manualslib.com manuals search engine

Function check

This may only be done by authorized personnel.

The machine is connected to the electricity supply and some components are live.

Instruction manual, cable, switch

- Check that a goods placing sign has been put up on the wall behind the disinfector.
- Check that the isolator switch on the wall is working and that the connecting cable is undamaged and free from defects.

Filters and valves

- Check that level switches and manual shutoff/opening valves are working properly.
- Check the filters in the supply line (see under Cleaning the filters in the supply line). Clean if necessary.
- Check all pipe couplings. Tighten and seal if necessary.
- Check filters in the ventilation grilles on the front of the electrical cabinet. See under Replacing filters in ventilation grilles. Replace if necessary.

Strainer

- Check that the coarse strainer and the fine strainer are correctly fitted and that they have been cleaned.

Controls

- The machine is operated with the buttons on the control panel.
- Check that the control buttons are working. If the buttons are working, a beep will be heard.
- While a program is running check that the yellow lamp at is lit.
  When the program is complete, the green lamp at should light up.

Insert for goods

- Check that the inserts for the machine dock properly with the water outlets.
- Check that spray arms (if fitted) rotate and are not clogged.
- Check that the goods to be cleaned are retained in the insert.
- Check the cleaning instructions of the goods manufacturer.
- To achieve the intended level of performance and safety, distribute the load evenly over the washing surface.
- Check the cleaning result visually when the process is complete.
- Check the accessories of the machine visually with regard to their intended use and function. For example, blocked ducts, worn and missing parts that might affect the performance of the machine. Water must be able to flow freely through the ducts in hollow instruments.

<Doc_TEC><Doc_502406700><Rel_B><Lang_GB>

Downloaded from www.Manualslib.com manuals search engine

Door

Check the door safety function. Check that the door seal closes tight and is undamaged and that there is no leakage while a program is running. Clean or replace the seal if necessary.

Detergent dosing

Check that the suction hose and pump are full of detergent or rinse-aid before running a program. Check the amount of detergent with a measuring beaker.

Washing system

All supply line valves must be closed when working on the pipe system.

- Make sure that the spray arms can spin freely.
- Check that the holes in the spray arms are not blocked. Clean if necessary.
- Check that the coarse strainer in the bottom of the washing chamber is correctly installed. Clean if necessary.
- Check that all couplings connecting the washing system to the pump and chamber are leak tight. Tighten and seal if necessary.
- Check that the end plugs of the spray arm are correctly fitted.

Temperature check

- Check the temperature during a program run. Compare time and temperature with the program sheet. Time and temperature are especially important in the disinfection phase.
- The measuring equipment must be capable of continuously recording temperature and time. High-performance equipment is essential for reliable measuring results, because of the relatively rapid temperature changes.
- Only one measuring point in the centre of the machine is needed for the function check.

Note!
Washer-disinfectors that have been shown not to meet the requirements in terms of temperature, sequence, washing system and safety must not be used until the faults have been corrected.

Dryer

- Check seals and hoses for leaks once a year.
- Replace the sterile filter if necessary or in the event of an alarm.
- Check the operation of the check valve.

Hoses

- Check valve
- Heat exchanger
- Door
- Booster tank and booster pump
- Waste cooling
- Tighten hose clips

Printer

- Check ink ribbon cartridge
- Check the printout quality.

Cooling fans in electrical cabinets

- Check that the fans rotate and that the filters are not clogged.

Power cables

- Make sure that the power cables are firmly attached in their sockets.

Downloaded from www.Manualslib.com manuals search engine

Fault indications

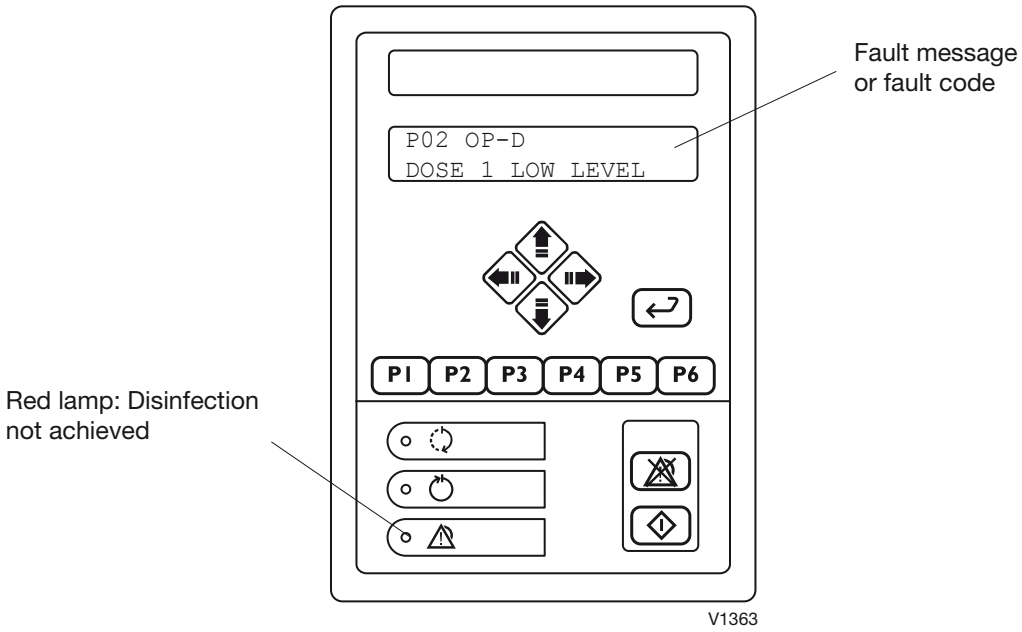

Handling alarms

Handling alarms appear on the display in plain text.

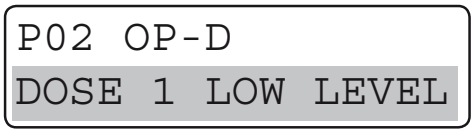

The machine cannot be started until the fault has been put right.

The following messages can be displayed:

Dose 1 low level	Empty container alarm 1, if detergent 1 is finished, a handling code is generated. The alarm is reset automatically when detergent is added.
Dose 2 low level	Empty container alarm 2, if detergent 2 is finished, a handling code is generated. The alarm is reset automatically when detergent is added.
Dose 3 low level	Empty container alarm 3, if detergent 3 is finished, a handling code is generated. The alarm is reset automatically when detergent is added.
Dose 4 low level	Empty container alarm 4, if detergent 4 is finished, a handling code is generated. The alarm is reset automatically when detergent is added.

Note!
The last process had access to detergent. A message is displayed for future processes.

<Doc_TEC><Doc_502406700><Rel_B><Lang_GB>

Downloaded from www.Manualslib.com manuals search engine

GETINGE

Alarm

If the red lamp at ⚠ lights up, the process has been aborted because of a fault.
The display shows a fault code.

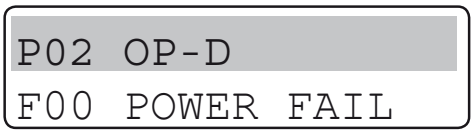

Acknowledging a fault code

Acknowledge the fault code by:

- Noting the fault code

1. Cancel the acoustic signal by pressing [⚠]. The machine remains locked but the program has been stopped.

2. Correct the fault or call service personnel.

3. Press [⚠] again. The display shows the password entry menu.

4. Enter the password (558387) using the arrow keys and press [↵]. All liquid is drained from the machine and the soiled-side door is unlocked*.

5. Remove the items or restart as usual.

The items in the machine have not undergone a complete process and must be washed again from the beginning with a new program.

If the items are still hot, handle them with care to avoid burns.

* If the drain pump is faulty, water cannot be drained from the machine and the fault must be put right. The soiled-side door is unlocked as soon as the password is confirmed. This is so that the items can be removed and processed in another machine while the faulty machine awaits servicing. Program 16 must be run before the machine can be started again.

Downloaded from www.Manualslib.com manuals search engine

Troubleshooting

The table below describes the fault codes that may be generated and a possible action for each fault code.

This may only be done by authorized personnel. The machine is connected to the electricity supply and some components are live.

Fault code	Fault	Comment
A00	Power failure	In the event of a power failure, the process stops. The fault code is generated when the power returns.
A02	Process tank slow to fill with water.	The water level sensor (-B23, -B24, -B25) is not activated within two minutes of filling starting. **Possible action:** a. Check that the shutoff valves are open and that water is reaching the machine. b. Check that the solenoid valves open and that their filters are not clogged. c. Check that the booster pump works. d. Check level sensor
A03	Booster tank slow to fill with water.	The water level sensor (-B21) is not activated within two minutes of filling starting. **Possible action:** a. Check that the shutoff valves are open and that water is reaching the machine. b. Check that the solenoid valve opens and that its filter is not clogged.
A04	The washing chamber takes more than 20 seconds to empty	The water level sensor (-B10) is still activated after emptying of the machine has been running for 20 seconds. **Possible action:** a. Check that the drain valve (-M17) opens. b. Check that the strainer in the machine is not blocked. c. Check that the waste pump (-M02) pumps out water. d. Check level sensor
A05	Water leakage in the dryer.	Leakage detectors (-B12 and -B35) are not activated while the washing cycle is running. **Possible action:** a. Check that the check valves to the dryer connection are not damaged and are closing correctly (tight). b. Check level sensor
A06	Faulty locking, soiled side	The door locking switch (-S02) is not activated within 10 seconds of the start of locking, or the door locking switch (-02) failed during a program run. **Possible action:** a. Check that nothing is trapped in the door. b. Check that the door locking switch (-S02) is activated within 10 seconds on door locking. c. Check that the door locking motor (-M11) starts and that the sealing switch (-S52) is not activated. d. Check the setting of the frame

<Doc_TEC><Doc_502406700><Rel_B><Lang_GB>

Downloaded from www.Manualslib.com manuals search engine

Fault code	Fault	Comment
A07	Faulty unlocking, soiled side	The door locking switch (-S01) is not activated within 10 seconds of the start of locking. **Possible action:** a. Check that nothing is trapped in the door. b. Check that the door locking switch (-S02) is activated within 10 seconds on door locking. c. Check that the door locking motor (-M11) starts and that the sealing switch (-S52) is not activated. d. Check the setting of the frame
A08	Faulty closing, soiled side	The door locking switch (-S03) is not activated within 20 seconds of the start of locking or the closed door switch (S-03) failed during a program run. This fault code is also displayed if the door crush protection has been tripped. **Possible action:** a. Check that nothing is trapped in the door. b. Check that the door closed switch (S-03) is activated within 20 seconds on door closing. c. Check that the door closing motor (-M10) starts and that the sealing switch (-S53) is not activated. d. Check the door motor chain and wire. e. Check the setting of the frame
A09	Faulty opening, soiled side	The door opening switch (-S04) is not activated within 20 seconds of the start of opening. **Possible action:** a. Check that nothing is trapped in the door. b. Check that the door open switch (-S04) is activated within 20 seconds on door opening. c. Check that the door opening motor (-M10) starts and that the sealing switch (-S54) is not activated. d. Check the door motor chain and wire. e. Check the setting of the frame
A10	Faulty locking, clean side	The door locking switch (-S07) is not activated within 10 seconds of the start of locking, or the door locking switch (-S07) failed during a program run. **Possible action:** a. Check that nothing is trapped in the door. b. Check that the door locking switch (-S07) is activated within 10 seconds on door locking. c. Check that the door locking motor (-M13) starts and that the sealing switch (-S56) is not activated. d. Check the setting of the frame
A11	Faulty unlocking, clean side	The door locking switch (-S06) is not activated within 10 seconds of the start of locking. **Possible action:** a. Check that nothing is trapped in the door. b. Check that the door locking switch (-S06) is activated within 10 seconds on door unlocking. c. Check that the door locking motor (-M13) starts and that the sealing switch (-S55) is activated. d. Check the setting of the frame

<Doc_TEC><Doc_502406700><Rel_B><Lang_GB>

Downloaded from www.Manualslib.com manuals search engine

Fault code	Fault	Comment
A12	Faulty closing, clean side	The door locking switch (-S08) is not activated within 20 seconds of the start of locking or the closed door switch (-S08) failed during a program run. This fault code is also displayed if the door crush protection has been tripped. **Possible action:** a. Check that nothing is trapped in the door. b. Check that the door closed switch (S-08) is activated within 20 seconds on door closing. c. Check that the door closing motor (-M12) starts and that the sealing switch (-S57) is not activated. d. Check the door motor chain and wire. e. Check the setting of the frame
A13	Faulty opening, clean side	The door opening switch (-S09) is not activated within 20 seconds of the start of opening. **Possible action:** a. Check that nothing is trapped in the door. b. Check that the door open switch (-S09) is activated within 20 seconds on door opening. c. Check that the door opening motor (-M12) starts and that the sealing switch (-S58) is not activated. d. Check the setting of the frame
A14	Low flow, dosing 1	Flowmeter (-B17) registers flow less than 10ml/20s from dosing pump (-M03). **Possible action:** a. Check operation of the dosing pump. b. Check that there is detergent in the container. c. Check whether an empty container alarm has occurred. d. Check that there is no air in the flowmeter and that it is working. e. Check that the hoses are not blocked. f. Check the calibration of the flowmeter.
A15	Low flow, dosing 2	Flowmeter (-B18) registers flow less than 10ml/20s from dosing pump (-M04). **Possible action:** a. Check operation of the dosing pump. b. Check that there is detergent in the container. c. Check whether an empty container alarm has occurred. d. Check that there is no air in the flowmeter and that it is working. e. Check that the hoses are not blocked. f. Check the calibration of the flowmeter.
A16	Low flow, dosing 3.	Flowmeter (-B19) registers flow less than 10ml/20s from dosing pump (-M05). **Possible action:** a. Check operation of the dosing pump. b. Check that there is detergent in the container. c. Check whether an empty container alarm has occurred. d. Check that there is no air in the flowmeter and that it is working e. Check that the hoses are not blocked. f. Check the calibration of the flowmeter.

Downloaded from www.Manualslib.com manuals search engine

Fault code	Fault	Comment
A17	Low flow, dosing 4.	Flowmeter (-B20) registers flow less than 10ml/20s from dosing pump (-M06). **Possible action:** a. Check operation of the dosing pump. b. Check that there is detergent in the container. c. Check whether an empty container alarm has occurred. d. Check that there is no air in the flowmeter and that it is working. e. Check that the hoses are not blocked. f. Check the calibration of the flowmeter.
A18	High conductivity.	The conductivity (-U01) is higher than the set value after the third repeat rinse. **Possible action:** a. Check that the correct type of water is connected. b. Check for detergent leaks. c. Check that the process tank is clean. d. Check for deposits on the voltage measurement sensor. e. Check the emptying
A19	Low pressure in drying unit.	The differential pressure (-B03) is 150 Pa. **Possible action:** a. Check whether the fan, differential pressure meter, hoses or filter(s) are faulty. b. When changing a filter, check that the new filter is correctly installed.
A20	High pressure in drying unit.	The differential pressure (-B03) is > 750 Pa . **Possible action:** a. Check whether the filter is clogged. b. Check the check valve.
A21	Low pressure from the circulation pump.	The pressure (-B02) is <20 kPa. **Possible action:** a. Check the docking between machine and wash rack. b. Check that the pump impeller rotates easily. c. Check the direction of rotation (see installation instructions). d. Check that the detergent is not foaming. e. Check the amount of detergent dosed.
A22	High pressure from circulation pump.	The pressure (-B02) is >200 kPa. **Possible action:** a. Check that no nozzles in the washing arms are blocked.
A23	Low temperature in drying unit.	The temperature (-B04) has not risen to 80 degrees C below the set value after five minutes. **Possible action:** a. Check that there is power on all phases up to the element. b. Check that the airways to the filter are clear.
A24	Faulty temperature sensor in booster tank.	The temperature (-B07) is <0°C or >130°C. **Possible action:** a. Check the temperature sensor (for open-circuit or short-circuit)
A25	Faulty temperature sensor (controlling) in wash chamber.	The temperature (-B05) is <0°C or >130°C. **Possible action:** a. Check the temperature sensor (for open-circuit or short-circuit)

Downloaded from www.Manualslib.com manuals search engine

Fault code	Fault	Comment
A26	Faulty temperature sensor (independent) in wash chamber.	Independent. The temperature (-B06) is <0°C or >130°C. **Possible action:** a. Check the temperature sensor (for open-circuit or short-circuit)
A27	Faulty temperature sensor in drying unit	The temperature (-B04) is <0°C or >130°C. **Possible action:** a. Check the temperature sensor (for open-circuit or short-circuit)
A28	Faulty temp sensor in wash chamber. (Too low because of a heating fault.)	Wash temperature (-B05) has not risen by at least 10 degrees C after eight minutes' washing. **Possible action for electrically heated machine:** a. Check that there is power on all phases up to the elements. b. Check the voltage before and after the overheat cutout. If the overheat cutout has tripped it must be replaced. The overheat cutouts are not resettable. c. Check the calibration of the temperature sensor **Possible action for a steam-heated machine:** a. Check the steam valve. b. Check that the ball valve is open and that the incoming steam filter is clean. c. Check steam pressure (see installation instructions). d. Check condensate drain. e. Check that there is no back-pressure in the condensate drain. f. Check the calibration of the temperature sensor.
A29	Diff. temp in wash chamber	Wash temperatures (-B05 and –B06), dependent and independent, differ by more than ±3 degrees C for three seconds. **Possible action:** a. Check the calibration of the temperature sensor (see the section Repair and adjustment and under Calibration) b. Check the temperature sensor.
A30	Faulty temp sensor in wash chamber. (Temperature too high because of a heating fault.)	The temperature in the wash chamber exceeds the maximum set temperature by more than five degrees C. **Possible action for an electrically-heated machine:** a. Check that the heating contactor is not stuck. b. Check that the heating elements are not short-circuited. c. Check the calibration of the temperature sensor (-B05) . **Possible action for steam heated machine:** a. Check that the steam valve for the chamber heater is not stuck. b. Check the calibration of the temperature sensor (-B05).
A31	High temperature in drying unit.	The temperature in the drying unit is above 130°C. **Possible action:** a. Check that the heating contactor is not stuck. b. Check that the heating elements are not short-circuited. c. Check the calibrationof the temperature sensor (-B04).
A32	High temperature in booster tank.	The temperature in the booster tank is above 98°C. **Possible action for an electrically-heated machine:** a. Check that the heating contactor is not stuck. b. Check that the heating elements are not short-circuited. c. Check the calibration of the temperature sensor (-B07). **Possible action for steam heated machine:** a. Check that the steam valve for the booster tank is not stuck. b. Check the calibration of the temperature sensor (-B07).

<Doc_TEC><Doc_502406700><Rel_B><Lang_GB>

Downloaded from www.Manualslib.com manuals search engine

Fault code	Fault	Comment
A33	Low disinfection temperature.	The temperature in the wash chamber is below the set value for disinfection. **Possible action for electrically heated machine:** a. Check that the heating contactor is not stuck. b. Check that the heating elements are not short-circuited. c. Check the calibration of the temperature sensor (-B05). **Possible action for a steam-heated machine:** a. Check that the chamber heating steam valve is not stuck. b. Check the calibration of the temperature sensor (-B05).
A34	Draining tank slow to empty.	The water level sensor (-B26) is still activated within 3 minutes of the start of emptying. **Possible action:** a. Check that the waste pump starts. b. Check that the waste tank outlet is not blocked. c. Check that the water level sensor (-B26) is working.
A35	Process valve position indication incorrect.	Limit switches (-S20 or -S21) are not activated within 10 seconds of the process valve starting to open or close. **Possible action:** a. Check that the process valve (-M16) starts. b. Check that the limit switch (-S20) indicates closed when the valve is trying to close. c. Check that the limit switch (-S21) indicates open when the valve is trying to open
A36	Wash chamber drain valve position indication incorrect drain valve.	Limit switches (-S22 or -S23) are not activated within 10 seconds of the process valve starting to open or close. **Possible action:** a. Check that the process valve (-M17) starts. b. Check that the limit switch (-S22) indicates closed when the valve is trying to close. c. Check that the limit switch (-S23) indicates open when the valve is trying to open
A37	Wash chamber slow to fill.	The water level sensor is not activated within 25 seconds of the start of post-filling . **Possible action:** a. Check that the process valve (-M16) opens. b. Check that the drain valve is closed and that it seals tight. c. Check that the sampling tap is closed.
A38	Faulty temp sensor in booster tank. (Temperature too low because of a heating fault.)	The water temperature (-B07) in the booster tank has not risen to the set value within 10 minutes of the start of heating. **Possible action for electrically heated machine:** a. Check that there is power on all phases up to the element. b. Check the voltage before and after the overheat cutout. If the overheat cutout has tripped it must be replaced. The overheat cutout is not resettable. **Possible action for steam heated machine:** a. Check the steam valve. b. Check that the ball valve is open and that the incoming steam filter is clean. c. Check steam pressure (see installation instructions). d. Check condensate drain. e. Check that there is no back-pressure in the condensate drain. f. Check the calibration of the temperature sensor (-B07).

<Doc_TEC><Doc_502406700><Rel_B><Lang_GB>

Downloaded from www.Manualslib.com manuals search engine

Fault code	Fault	Comment
A39	External stop signal.	External connection not intact. **Possible action:** a. Check the connections at the terminal strip (-X06:9 and -X06:10) in the electrical cabinet.
A41	Faulty circulation pressure sensor.	The circulation pressure sensor (-B02) is <0kPa or >160kPa. **Possible action:** a. Check the circulation pressure sensor (for open or short circuit)
A42	Faulty pressure differential sensor in drying unit.	The differential pressure sensor (-B03) is <0Pa or >750Pa. **Possible action:** a. Check the differential pressure sensor (for open or short circuit)
A45	Monitoring system: Disinfection time + 60 sec.	The disinfection stage exceeds the set time by more than 60 seconds. **Possible action for electrically heated machine:** a. Check that there is power on all phases up to the elements. b. Check the voltage before and after the overheat cutouts. If the overheat cutout has tripped it must be replaced. The overheat cutout is not resettable. c. Check the calibration of the temperature sensor (-B07). d. Check the set temperature control parameters. **Possible action for steam heated machine:** a. Check the steam valve. b. Check that the ball valve is open and that the incoming steam filter is clean. c. Check steam pressure (see installation instructions). d. Check condensate drain. e. Check that there is no back-pressure in the condensate drain. f. Check the calibration of the temperature sensor (-B07). g. Check the set temperature control parameters
A46	Monitoring system: Diff. between temp. sensors in wash chamber.	See A29. Sensors for supervisor are called -B08 and -B09.
A47	Monitoring system: Circulation pressure low.	See A21
A48	Monitoring system: High conductivity.	See A18
A49	Monitoring system: Dosing flow low.	Flowmeters (-B17, -B18, -B19 or -B20) register less than 10ml/20s flow from dosing pump (-M03, -M04, -M05 or -M06. **Possible action:** a. Check operation of the dosing pump. b. Check that there is detergent in the container. c. Check whether an empty container alarm has occurred. d. Check that there is no air in the flowmeter and that it is working. e. Check that the hoses are not blocked. f. Check the calibration of the flowmeter.

Downloaded from www.Manualslib.com manuals search engine

Repair and adjustment

Connecting a PC

An RS-232 cable (art. no. 5010191-00) is needed to connect a PC to the washer-disinfector.

Proceed as follows:

1. Connect a cable between the PC and COM-port as shown below.
   - Connect the PC to X24 (if system software load connect PC to X25).
   - X25 is used mainly for T-doc (RS485) and printer (RS232 or RS485).
   - Connect the scanner to X32.

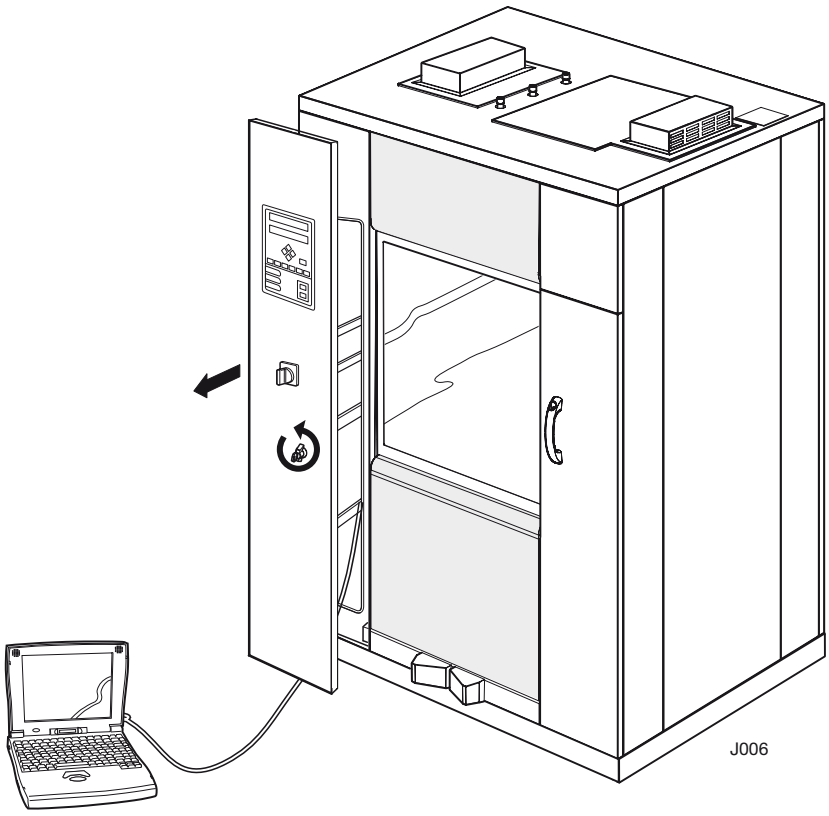

Downloaded from www.Manualslib.com manuals search engine

Connections

Fixed scanner

To connect the barcode scanner, proceed as follows.

1. Connect the scanner as shown in the circuit diagram below.

Power supply	Brown	+5V
	Blue	-5V
	Black	X304A2
	White	X304A3

2. Set type of communication. The communication settings are done in the service program; see menu tree, Sections 1.4.2.3.5.1 and 1.4.2.3.5.2.

   Set COM2 (X24) scanner 2 Baud 9600.

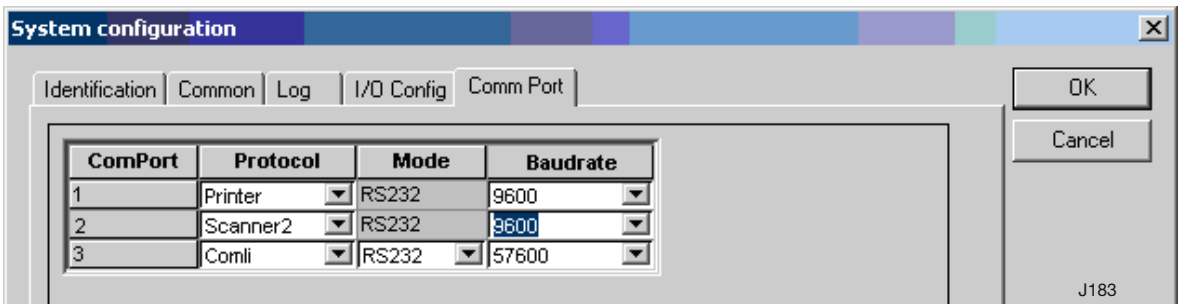

3. Set the dipswitches in the machine to permit communication with the scanner.

   The settings for dipswitches are made in the service program, see Menu tree chapter 1.4.2.4

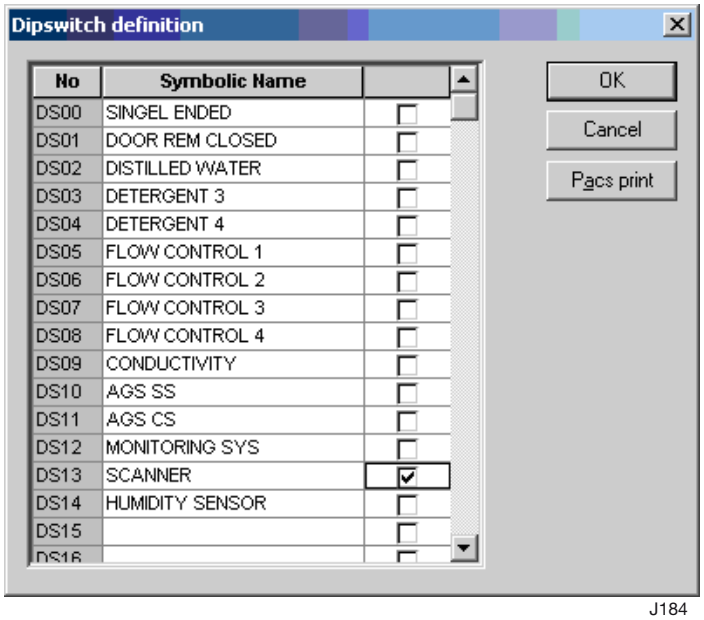

Downloaded from www.Manualslib.com manuals search engine

GETINGE

Printers

Custom FH190SP-24S3-0005

Proceed as follows to connect the printer to machine.

1. Connect the communication cable between the printer and connector X302/ Port X32.
2. Connect the power supply cable between the printer and connector X303.
3. Set type of communication. The communication settings are done in the service program; see menu tree, Sections 1.4.2.3.5.1 and 1.4.2.3.5.2.
   Set Com port 1 = Printer. Baud rate 9600

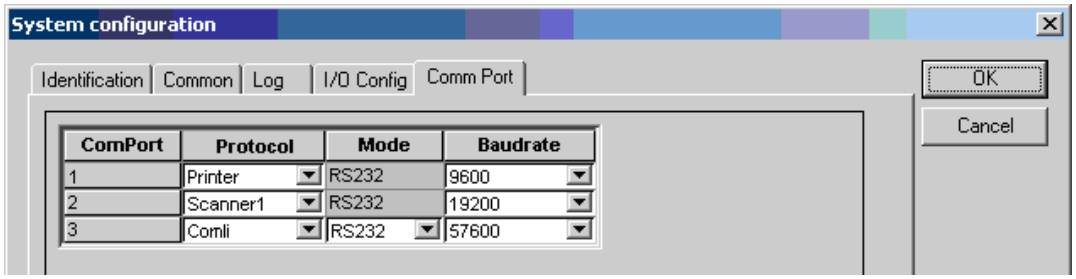

J177

4. Set the print mode (only possible from CS100/1000).
   Printer type = 24 CHAR, Printer mode = 1 (Only mode 1 is possible to this printer)

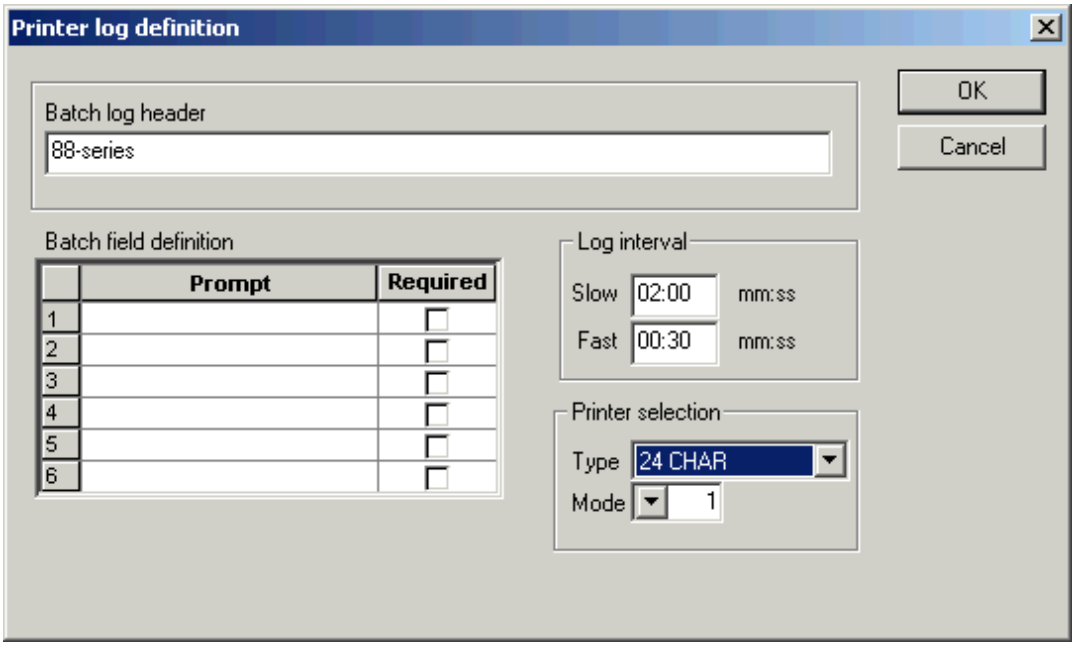

J178

Downloaded from www.Manualslib.com manuals search engine

Printer configuration

Check the printer configuration as follows.

- Cut off the power to the printer.
- Hold down the **FEED** and **PRINT** buttons at the same time and switch on the power to the printer.
- The printer is now in programming mode.
  - Press the **FEED** button to step though the parameter list (this is printed on the paper) and to confirm a changed parameter setting or that the set parameter is OK. Available parameter settings are listed in the table below.
  - Press the **PRINT** button to change between available settings for the current parameter. Press FEED when the desired setting is printed out.
- When the last parameter in the list has been confirmed, the printer automatically prints the entire new configuration. The printer is then ready for use.

Parameters	Available setting
Print mode	Custom emulation
	ESC/POS emulation
	iDP-emulation
	Print = Normal
	Print = Reverse
	Little
	Double width
	Double height
	Expanded
	Font 1
	Font 2
	CR-LF Honor CR
	CR-LF Ignore CR
Serial mode	Baud rate 300
	Baud rate 600
	Baud rate 1200
	Baud rate 2400
	Baud rate 4800
	Baud rate 9600
	Baud rate 19200
	Baud rate 38400
	Protocol = 8,N,1
	Protocol = 8,E,1
	Protocol = 8,0,1
	Protocol = 8,N,1
	Protocol = 7,N,2
	Protocol = 7,E,1
	Protocol = 7,0,1
	Flow control CTS-RTS
	Flow control XON-XOFF
	Print key null
	Print key transmit $OD
	Buffer 1K byte
	Buffer 24K byte
Real time clock	Enable set RTCK
	Disable set RTCK
	Enable seconds
	Disable seconds
	Enable print time by key
	Dis. print time by key

Available settings

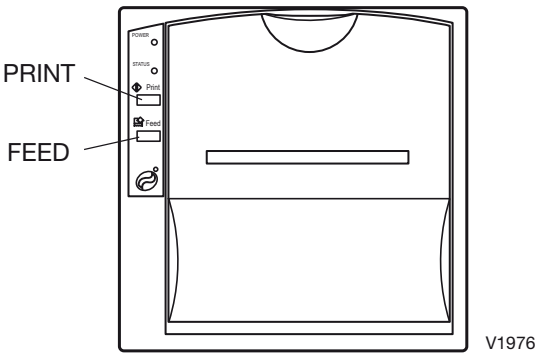

Printer

```
* END PROGRAMMING *
CUSTOM EMULATION
PRINT = REVERSE
LITTLE
FONT 1
CR-LF IGNORE CR
DISABLE SET RTCK
DISABLE SECONDS
DIS. PRINT TIME BY
KEY
BUFFER 1K BYTE
BAUD RATE = 9600
PROTOCOL = 8,N,1
FLOW CONTROL CTS-RTS
PRINT KEY NULL
```

Printout of current configuration

Downloaded from www.Manualslib.com manuals search engine

GETINGE

Lexmark C524

Proceed as follows to connect the printer to machine.

1. Connect the communication cable between the printer and connector X302/ Port X32.
2. Set type of communication. The communication settings are done in the service program; see menu tree, Sections 1.4.2.3.5.1 and 1.4.2.3.5.2.
   Set Com port 1 = Printer. Baud rate 9600

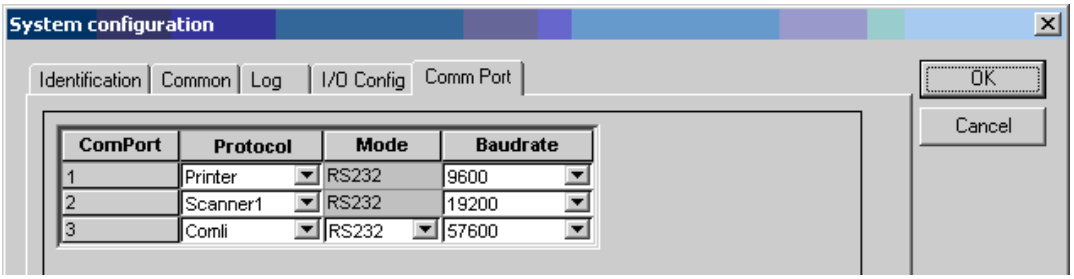

J179

3. Set the print mode (only possible from CS100/1000).
   Printer type = HP COLOR, Printer mode = 1-4 (1 = Only text, 2 = Only Graphics, 3 = Text + Graphics on the same page and 4 = Text and graphics but on separate pages)

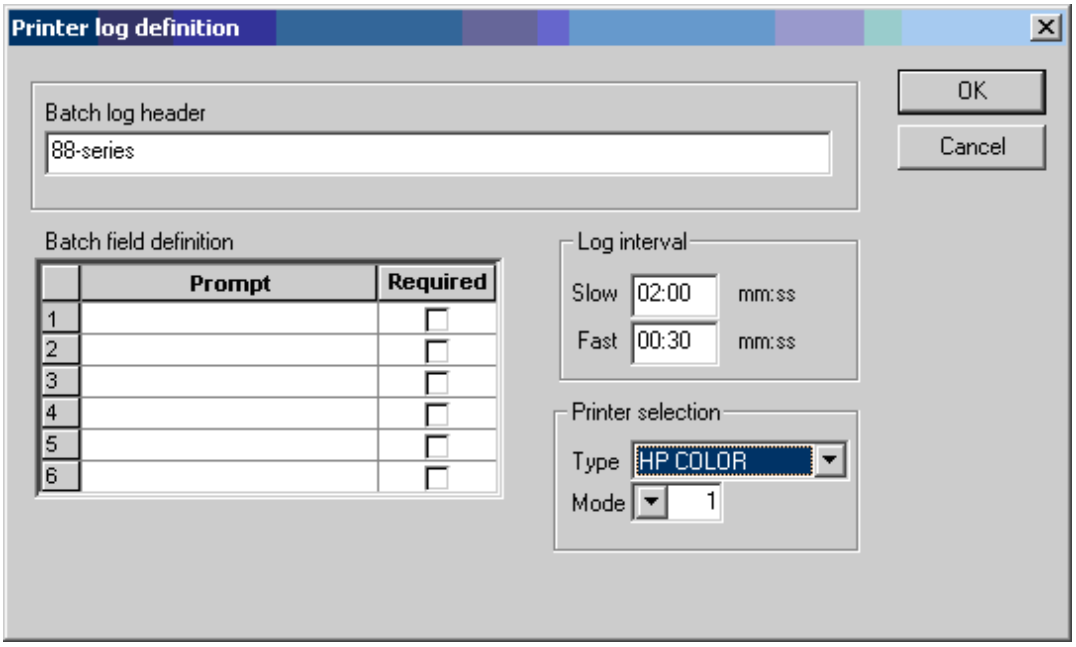

J180

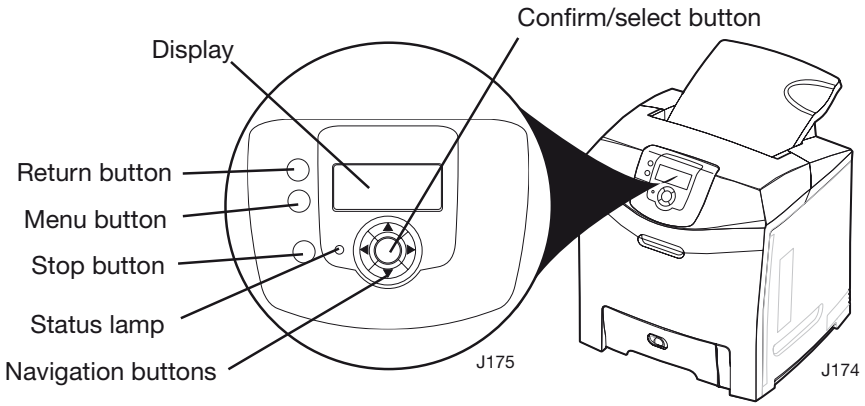

Downloaded from www.Manualslib.com manuals search engine

NetCom

Proceed as follows to connect the NetCom card.

1. Follow the installation instructions in the manual supplied with the NetCom card.
2. Set com port 3 = Comli, Mode= RS485, Baud 57600
3. Set the dipswitches in the machine to permit communication with the T-DOC (DS30-PC DISK LOG). The settings for dipswitches are made in the service program, see Menu tree chapter 1.4.2.4

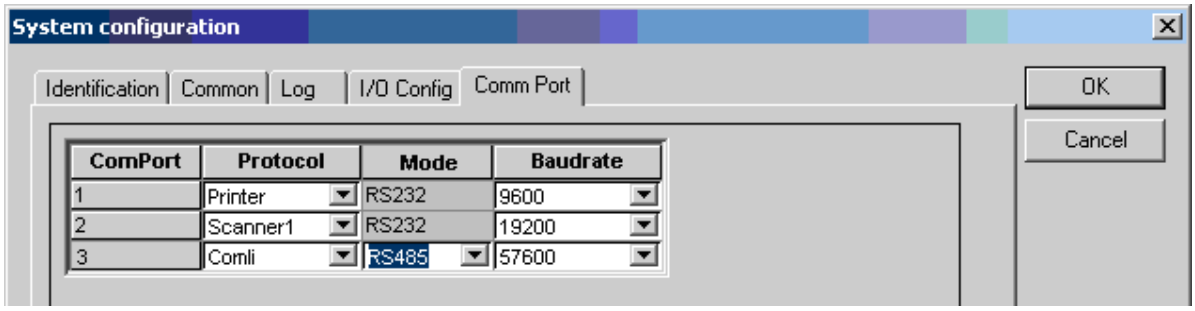

J187

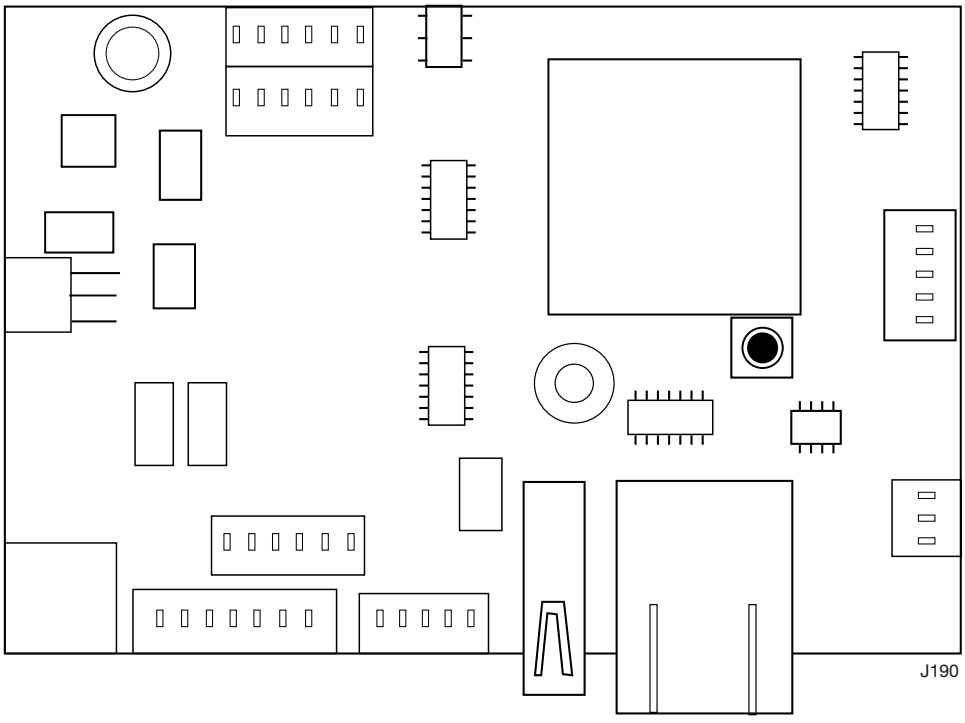

J190

NetCom card

Downloaded from www.Manualslib.com manuals search engine

GETINGE

Connection AGS

AGS (Air Gliding System) is a transport system that automatically manages loading and unloading of the washer disinfector. Communication between the transport system's PLC and the washer disinfector takes place via the AS-i bus.

Proceed as follows to connect the machine.

1. Connect the AS-i node (see the spare part list for the part no.) to terminal block –X11 in the electrical cabinet.

Terminal block	Voltage	Current	Description
-X11:1	24VDC	<200mA	AS-i out 0
-X11:2	24VDC	<200mA	AS-i out 1
-X11:3	24VDC	<200mA	Voltage supply
-X11:4	24VDC	<200mA	AS-i I+
-X11:5	24VDC	<200mA	AS-i I1
-X11:6	24VDC	<200mA	AS-i I2
-X11:7	24VDC	<200mA	AS-i I3
-X11:8	24VDC	<200mA	Standby

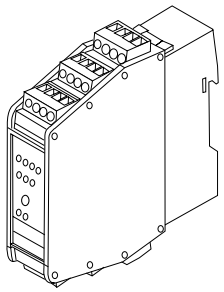

AS-i Node

See the wiring diagram for additional description of the connection points.

2. Connect the communication cable to terminal block –X07. See the wiring diagram for additional description of the connection points.

Terminal block	Voltage	Current	Description
-X11:9-12	Only for internal communication	-	Communication between the washer disinfector and AGS
-X07:15-18	Only for internal communication	-	Communication between the washer disinfector and AGS

See the wiring diagram for additional description of the connection points.

3. Set the dipswitches in the machine to permit communication with the AGS. The settings for dipswitches are made in the service program, see Menu tree chapter 1.4.2.4

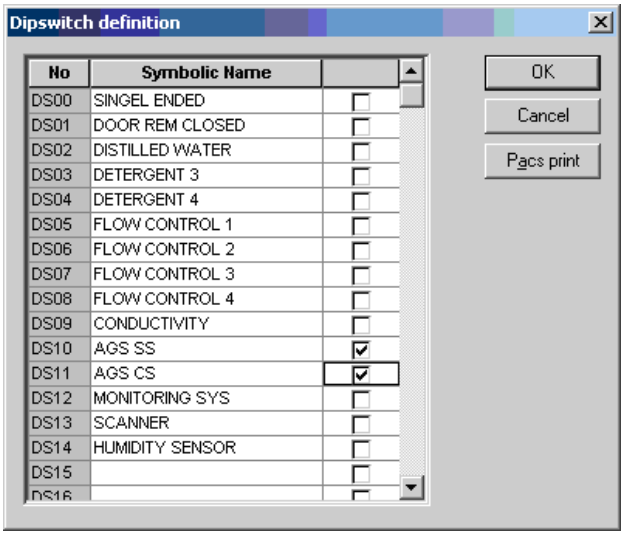

J181

4. Set the address on the washer disinfector's AS-i node. See the instruction in the manual supplied with AGS.

Downloaded from www.Manualslib.com manuals search engine

Connection loader/unloader

Loader/unloader is a system that automatically manages loading and unloading of the washer disinfector. The loader/unloaders can be one or two positions. Communication between the loaders' PLC and the washer disinfector takes place via a digital signal transfer.

Proceed as follows to prepared the machine for the loaders.

1. Connect the cables for the loader in the machine between terminal block –X07 in the electrical cabinet and connector –X261.

Terminal block	Voltage	Current	Description
-X07:1	24VDC	<500mA	Voltage supply to the loader
-X07:2			
-X07:3			
-X07:7	24VDC	<200mA	Ready signal from the loader
-X07:8			
-X07:11	24VDC	<200mA	Start signal to the loader
-X07:12			

See the wiring diagram for additional description of the connection points.

2. Connect the cables for the unloader in the machine between terminal block –X07 in the electrical cabinet and connector –X262.

Terminal block	Voltage	Current	Description
-X07:4	24VDC	<500mA	Voltage supply to the unloader
-X07:5			
-X07:6			
-X07:9	24VDC	<200mA	Ready signal from the unloader
-X07:10			
-X07:11	24VDC	<200mA	Start signal to the unloader
-X07:13			

See the wiring diagram for additional description of the connection points

3. Connect the compressed air hoses between incoming compressed air connection and each connection point on the loader/unloader.

Downloaded from www.Manualslib.com manuals search engine

4. Set the dipswitches in the machine to permit communication with each loader/unloader. The settings for dipswitches are made in the service program, see Menu tree chapter 1.4.2.4

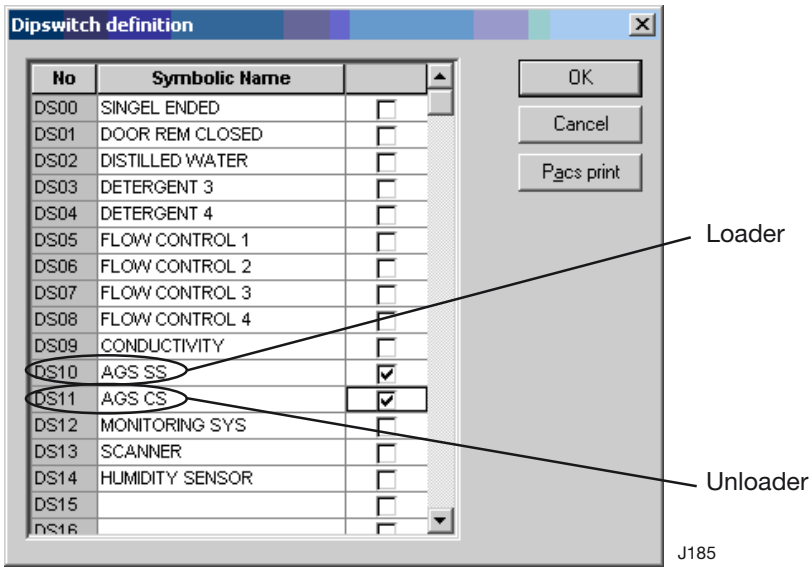

J185

5. Follow the instruction supplied with the loader/unloaders to connect the loader with the machine.

J188

Downloaded from www.Manualslib.com manuals search engine

Termination central dosing

The machine is prepared for connection to an external dosing system. Communication between the washer disinfector and the central dosing system takes place via a digital signal transfer.

The following signals are available for communication.

Terminal block	Voltage	Current	Description
-X04:1-2	Potential free	Max 1A	Start signal dosing 1
-X04:3-4	Potential free	Max 1A	Start signal dosing 2
-X04:5-6	Potential free	Max 1A	Start signal dosing 3
-X04:7-8	Potential free	Max 1A	Start signal dosing 4
-X04:9	24VDC	<200mA	Common +24VDC (*)
-X04:10	24VDC	<200mA	Detergent dosing 1 available (*). (Signal from the central dosing system that the detergent is available)
-X04:11	24VDC	<200mA	Detergent dosing 2 available (*). (Signal from the central dosing system that the detergent is available)
-X04:12	24VDC	<200mA	Detergent dosing 3 available (*). (Signal from the central dosing system that the detergent is available)
-X04:13	24VDC	<200mA	Detergent dosing 4 available (*). (Signal from the central dosing system that the detergent is available)
-X06:9-10	24VDC	<200mA	Ext. Stop signal (*). E.g. incorrect dosing.

(*) The cable length must not exceed 10 m. The potential free contact must be used if necessary.

Downloaded from www.Manualslib.com manuals search engine

Potential free contacts

The machine is prepared to supply specific information to an external system. There are a number of potential free contacts on the machine for this purpose.

The following signals are available on the machine.

Terminal block	Voltage	Current	Description
-X06:1-2	Potential free	Max 1A	Process running
-X06:3-4	Potential free	Max 1A	Process complete
-X06:5-6	Potential free	Max 1A	Alarms
-X06:7-8	Potential free	Max 1A	Forced ventilation
-X06:9-10	Potential free	<200mA	Ext. Stop signal (*). E.g. incorrect dosing.

(*) The cable length must not exceed 10 m. The potential free contact must be used if necessary.

Downloaded from www.Manualslib.com manuals search engine

Loading programs to flash memory

The flash memory (existing or new card) can be reloaded with new wash programs or a new system program. Loading new wash programs requires the CS-100/CS1000 program and loading of a new language version requires CSTools. Both can be purchased via Getinge Academy. Instructions are supplied with CS-1000. System programs are loaded with Flashloader.

Loading system programs

Note:

Always make a backup copy before starting work on updating system programs.

1. Connect a PC to the machine; see under Connecting a PC.
2. Check that the machine is in STANDBY mode.
3. Make a backup copy by starting CS 1000 and choosing:
   Tools/PACS RAM/Upload To File...

4. Save the *.prm file in your chosen location.

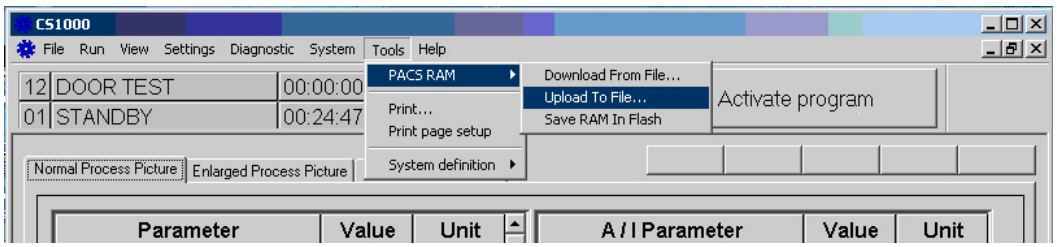

Figure 1

5. If using existing card, do a Save RAM In Flash (the set calibration values will then be automatically moved back after loading of the program(s))

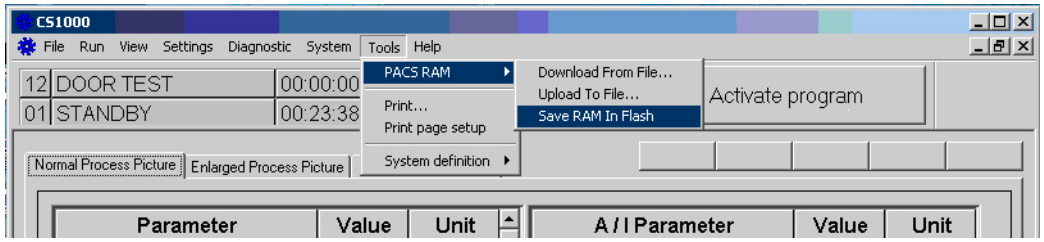

Figure 2

6. Switch off the power to the machine with the main switch.

Downloaded from www.Manualslib.com manuals search engine

7. Move jumper 1 on the board for the PACS 350 control system from Normal to System Load. Check that jumper 2 is in the Flash position and that jumper 3 is in the ON position.

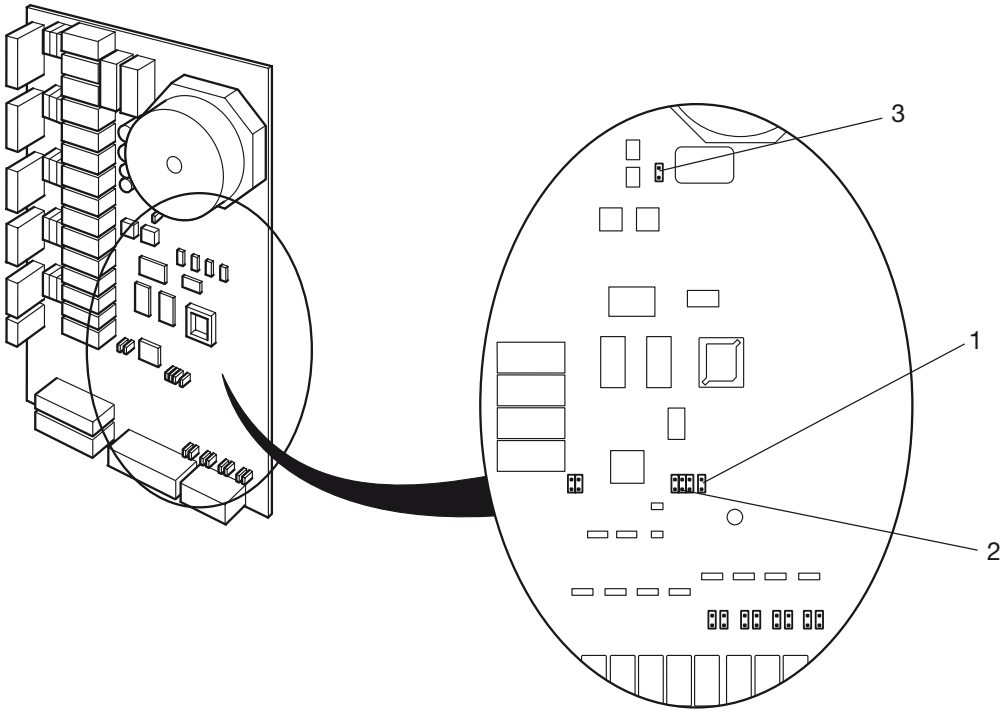

8. Switch on the power to the machine with the main switch. The display lights up but without text.

9. Start Flashloader from PC.

Downloaded from www.Manualslib.com manuals search engine

10. Set up as shown.

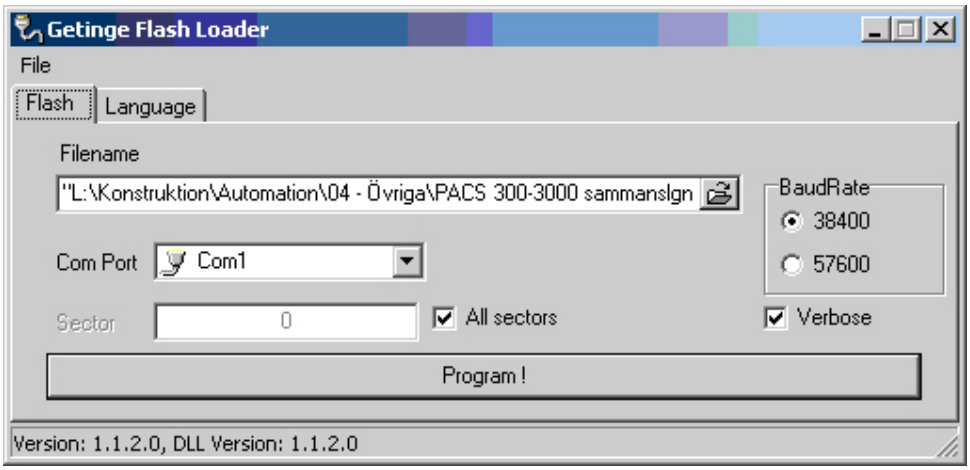

Figure 6

Filename Choose the right program file (*.a37).
Com Port The port to which you connected the data cable to your PC.
Baud Rate Choose 38400
All Sectors and Verbose must be checked (=selected).

11. Start loading by pressing Program !. The following image appears.

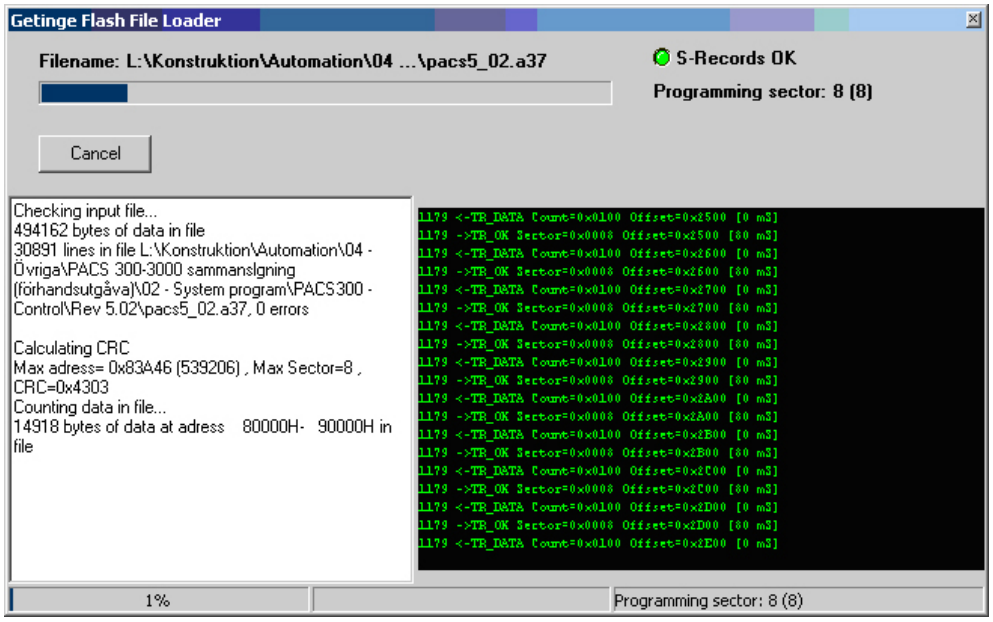

Figure 7

12. When loading is complete, the following image appears. Press OK.

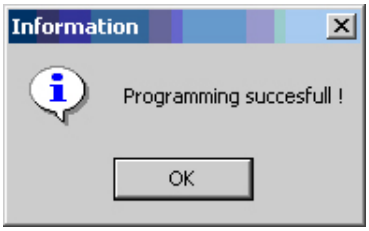

Figure 8

Downloaded from www.Manualslib.com manuals search engine

13. Check that the battery jumper (3) is set to ON.
14. Switch off the power to the machine with the main switch.
15. Change the jumper (1) to Cold.
16. Switch on the power to the machine with the main switch. The display should now show:

17. Without switching off the power, move jumper 1 to the Normal position.
18. Close Flashloader.
19. Start CS-1000 and load wash programs; see instructions for CS-1000.

Load language files

Instructions for loading language files come with the CS-1000 package.

Note:
Always make a backup copy before starting work on updating system programs.

Downloaded from www.Manualslib.com manuals search engine

Loading a new application into PACS

With CS1000

1. Make a backup of the existing software. “Tools” “PACS RAM” “Upload to file (if this has not already been done).

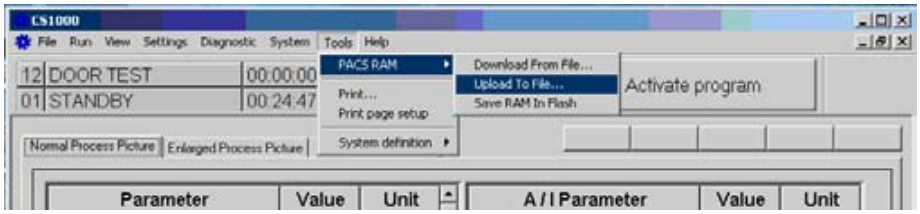

Figure 1

2. Download the new software. “Tools” “PACS RAM” “Download From File”.

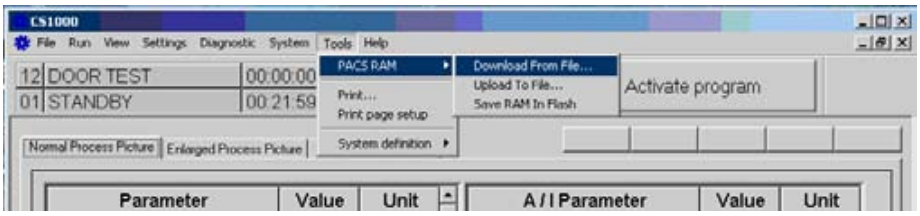

Figure 3

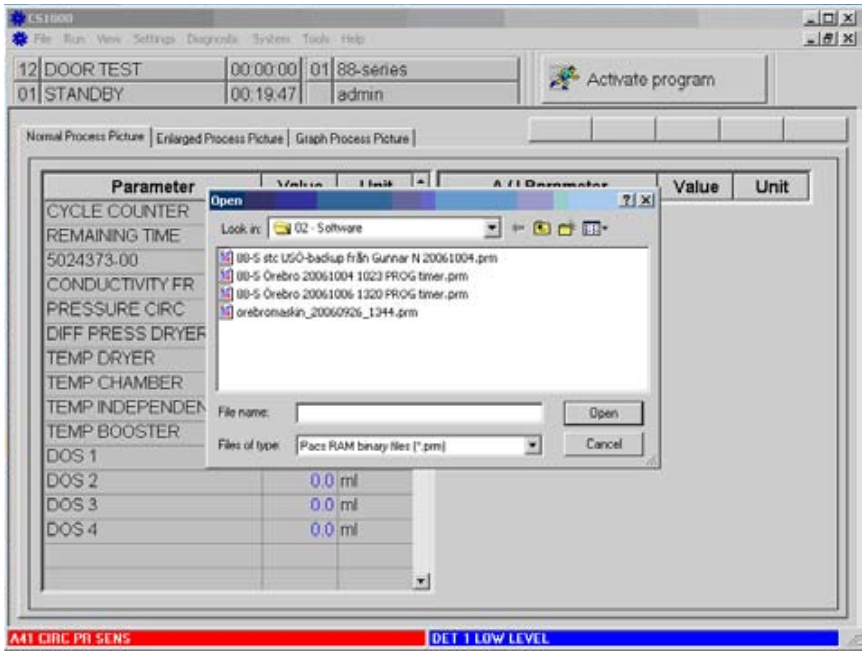

Figure 4

3. Start the machine and check that everything is as it should be.

Downloaded from www.Manualslib.com manuals search engine

4. Switch off the power to the machine and install the “Flash prom” (if it is missing).

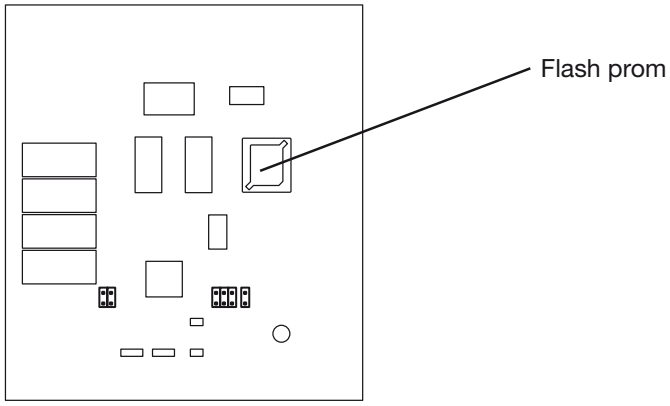

5. Switch on the power. Flash the new software to “Flash prom”. “Tools” “PACS RAM” “Save RAM In Flash”. This may take a few seconds.

Figure 2

Reloading the backup from “flash prom” to PACS

Without CS1000

1. Switch off the power to the machine and remove the old prom with a prom extractor.
2. Move jumper 1 to cold start. Power on the machine and wait for a beep.

Now the display shows:

3. Switch off the power to the machine. Install the new “flash prom”.

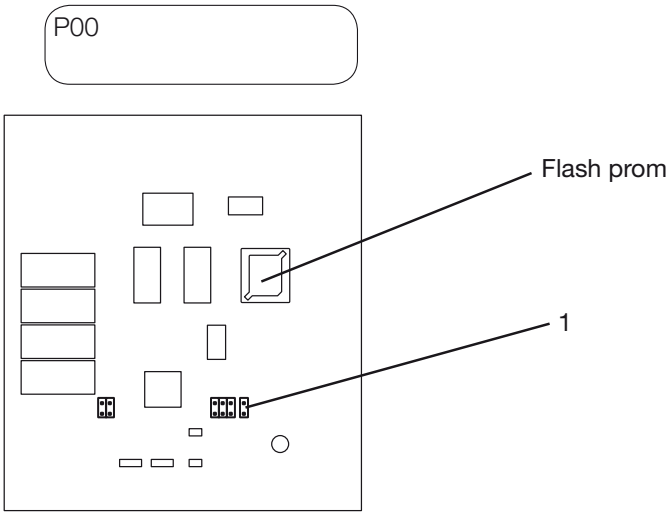

4. Switch on the power. Now the new software has been loaded from the “flash prom” to the processor.
5. Without switching off the power, move jumper 1 to the Normal position. Start the machine and make sure that everything is working as it should.

Downloaded from www.Manualslib.com manuals search engine

Cold start

Do a cold start when the machine has hung and you cannot proceed with the program.

1. Switch off the power to the machine.
2. Move the programming jumper (1) from Normal to Cold.
3. Switch on the power.
4. Move the programming jumper (1) from Coldstart to Normal. **NOTE:** The power is still on.
5. Set the doors to the home position using the service program (tab 5 of the Software description and settings, section headed Test digital output display (1.4.2.5.3.4) or CS1000.
   Home position for the doors:
   Soiled side = door unlocked and open
   Clean side = door closed and locked

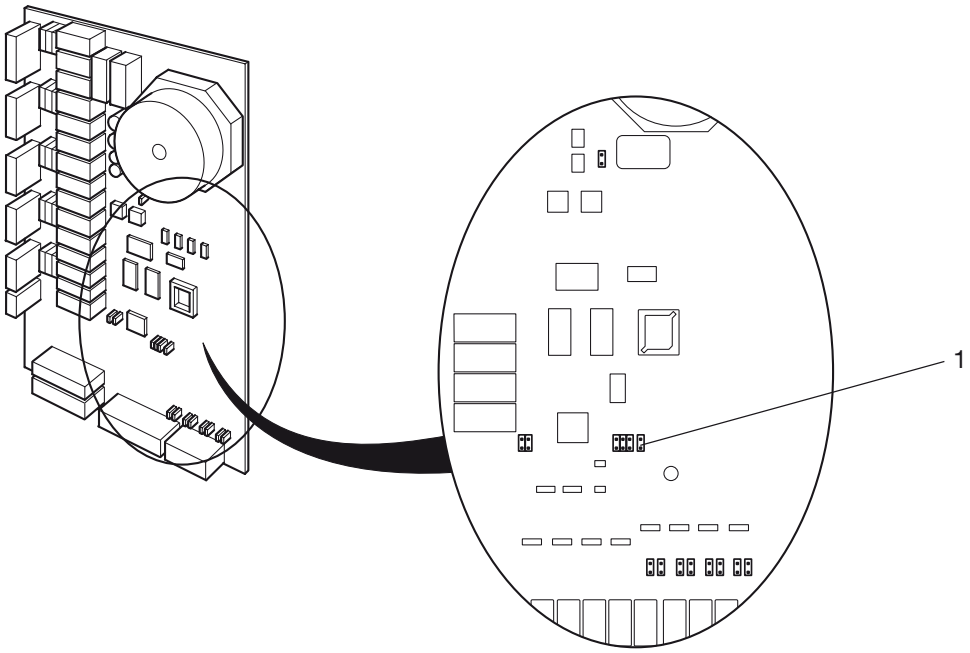

Downloaded from www.Manualslib.com manuals search engine

GETINGE

Changing user language

The language can be changed in two ways, via the control panel or via CS1000.

With user panel

The user language can be changed in the “Settings” “System menu” “Configuration” “Language Date format” menu. See menu tree in this manual.

With CS1000

The user panel language can be changed in the “System” “System configuration” menu.

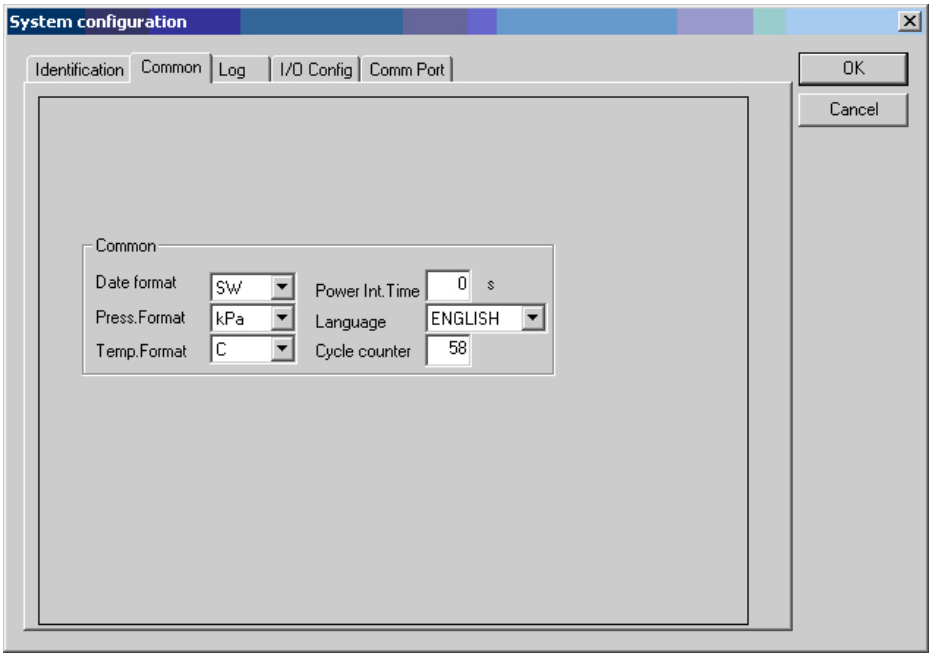

Figure 5

Downloaded from www.Manualslib.com manuals search engine

Calibration

Calibrating PACS conductivity

To calibrate the conductivity meter, proceed as follows.

1. Connect a PC with the CS 1000 program installed to the disinfector.
2. Press [E] on the conductivity meter.
3. Enter code 22 with [+] and [−].
4. Press [E]. Setup 1 appears.
5. Choose Output med [+] and [−].
6. Press [E]. Sel. Type appears.
7. Choose SIM med [+] and [−].
8. Press [E] .
9. Choose 0 ... with [+] and [−] 22 mA.
10. Set 4 mA.
11. Start CS 1000 and choose Settings/Calibration/Analog Input Automatic...

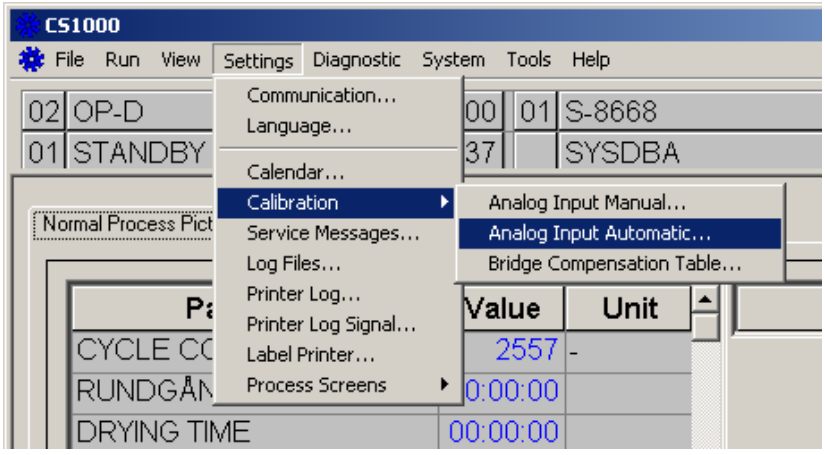

V1563

Downloaded from www.Manualslib.com manuals search engine

12. Click Conductivity (A) and then Calibrate (B).

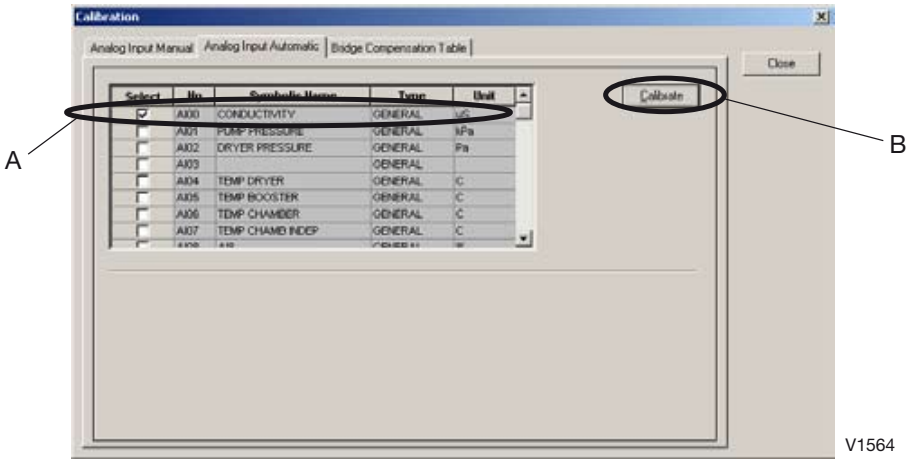

13. Enter the value 0 (C) and click Set Low.

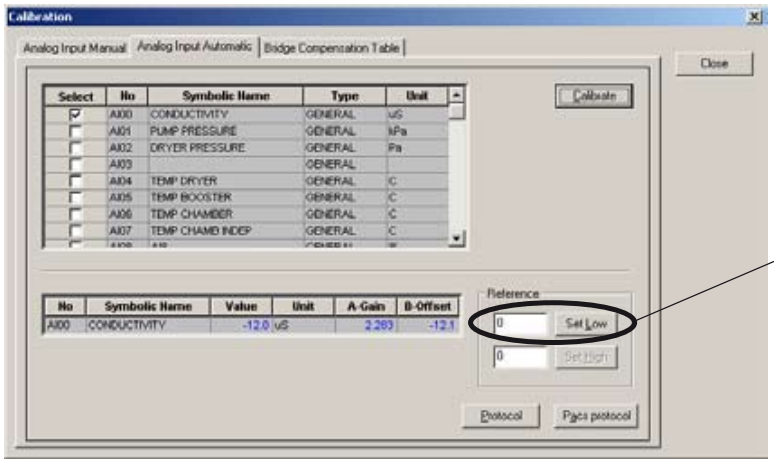

14. Set 20 mA on the conductivity meter with ⊕ and ⊖.
15. Enter 500 (D) in CS 1000 and click Set High.

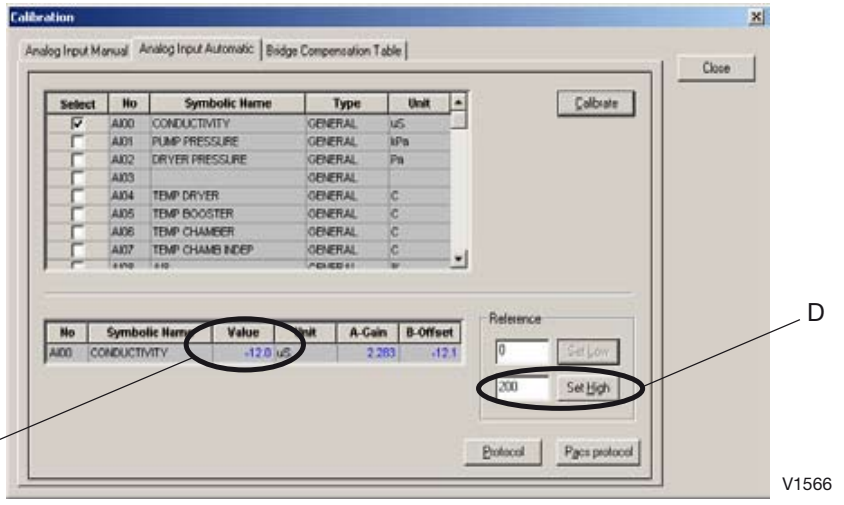

Downloaded from www.Manualslib.com manuals search engine

16. Check that the value (E) rises to 500.
17. Cancel the acoustic signal by pressing Close (F).

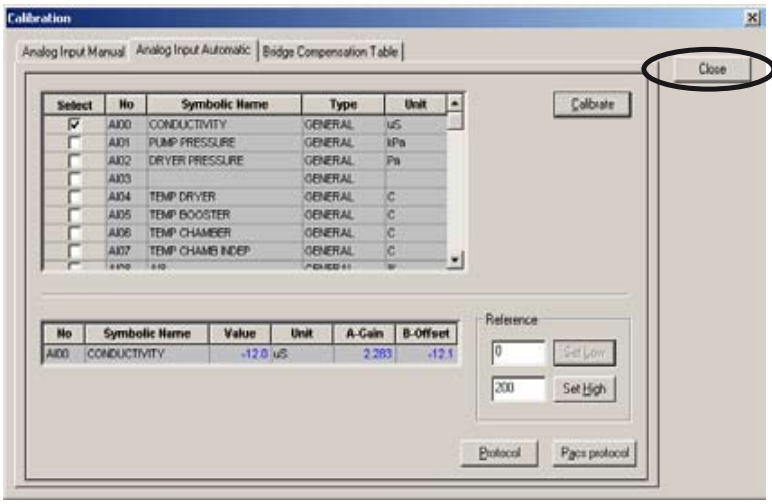

18. Press [+] and [−] at the same time. Output appears on the display.
19. Press [E]. Sel. Type appears.
20. Choose Lin. with [−].
21. Press [E] .
22. Press [+] and [−] at the same time twice to log out of the conductivity meter.

Downloaded from www.Manualslib.com manuals search engine

GETINGE

Pressure sensor for circulation pump

To calibrate the pressure sensor for the circulation pump, proceed as follows.

1. Connect a PC with the CS 1000 program installed to the disinfector.
2. Connect a process simulator to A01-X1;
   + on 3B
   - on 3A
3. Set the process simulator to 4 mA.
4. Start CS 1000 and choose Settings/Calibration/Analog Input Automatic...

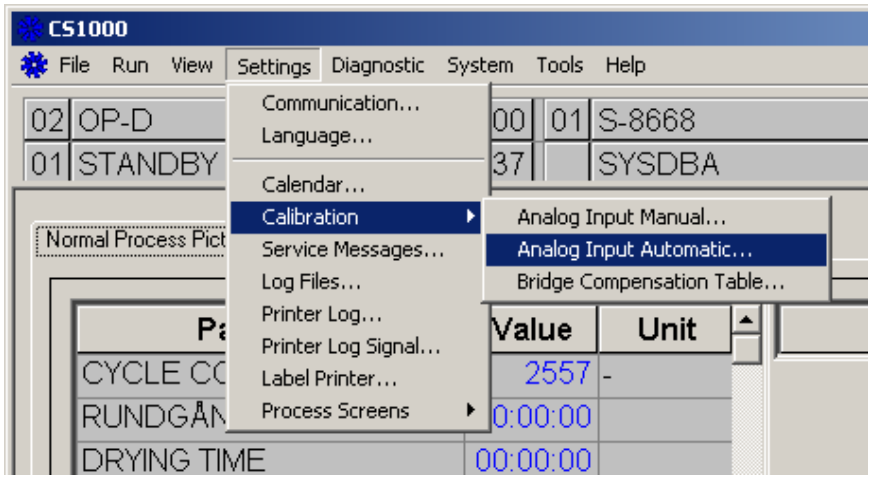

V1563

5. Click Pump pressure (A) and then Calibrate (B).

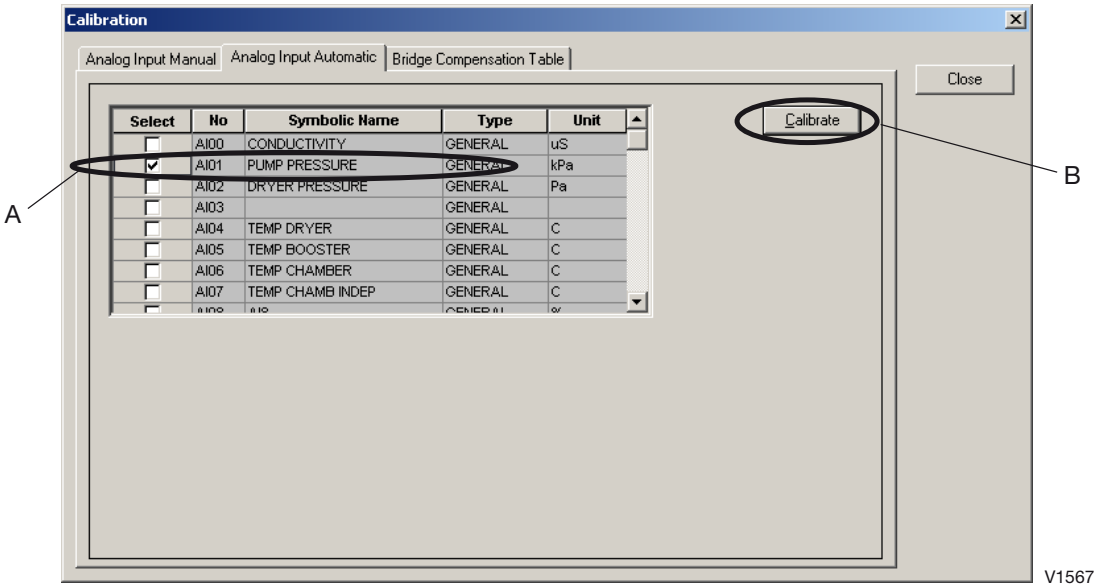

V1567

Downloaded from www.Manualslib.com manuals search engine

6. Enter the value 0 (C) and click Set Low.

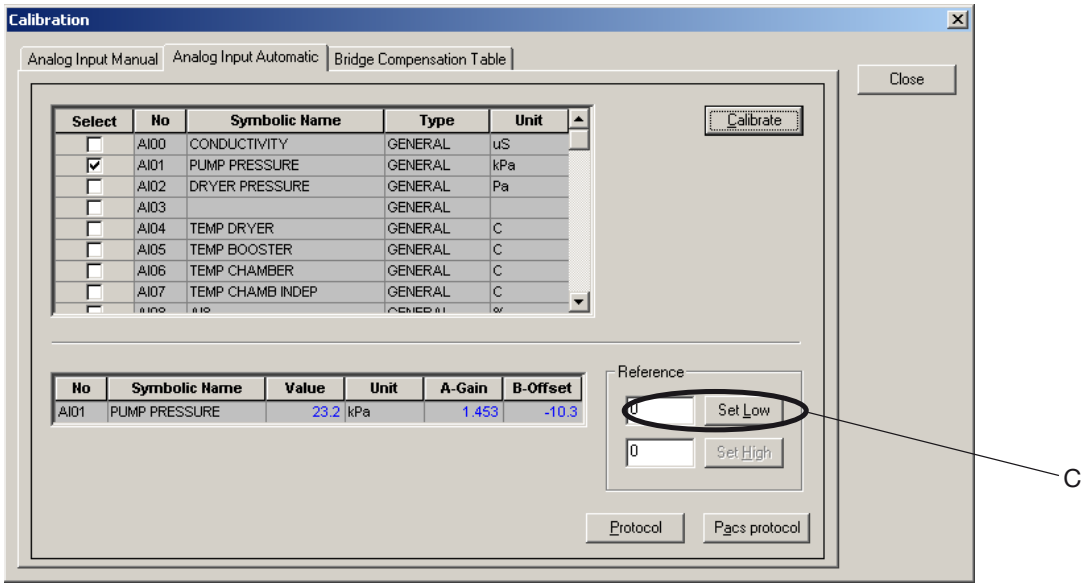

V1568

7. Set the process simulator to 20 mA.
8. Enter 160 (D) in CS 1000 and click Set High.

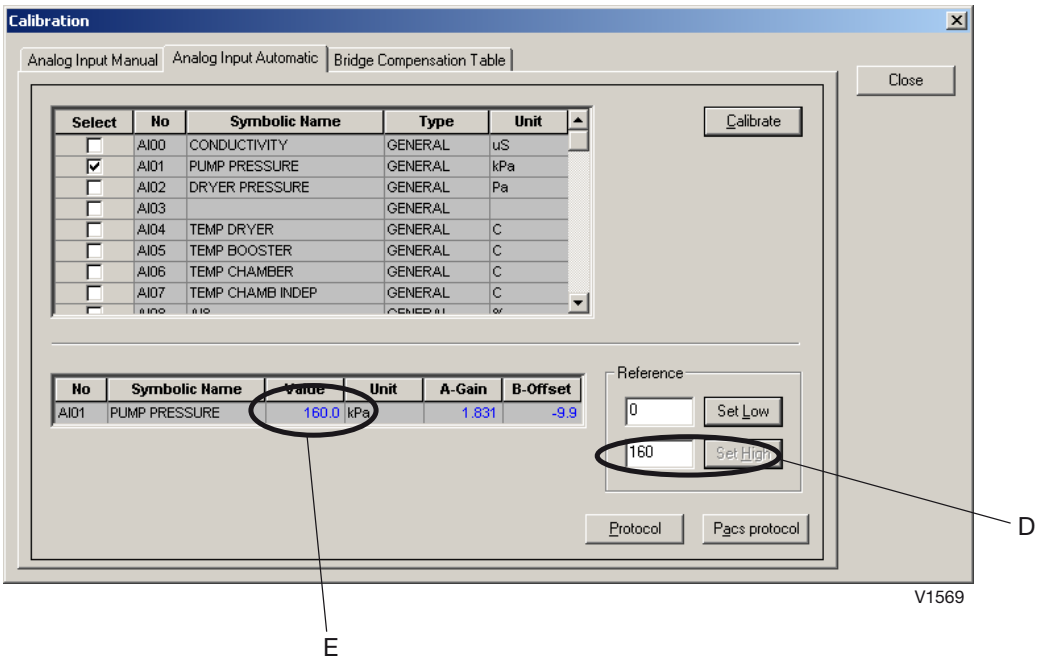

V1569

9. Check that the value (E) rises to 160.
10. Log off CS 1000.

<Doc_TEC><Doc_502406700><Rel_B><Lang_GB>

Downloaded from www.Manualslib.com manuals search engine

GETINGE

Temperature sensors - with resistor

Proceed as follows to calibrate the temperature sensors with the aid of resistors:

1. Connect a PC with the CS 1000 program installed to the disinfector.
2. Insert resistors for 20 ºC at the following places:
   A01-X1 Chamber temperature 9A, 10A
   A01-X2 Independent chamber temperature 5A, 6A
   A01-X2 Booster tank 3A, 4A
   A01-X5 Dryer 1A, 2A
3. Start CS 1000 and choose Settings/Calibration/Analog Input Automatic...

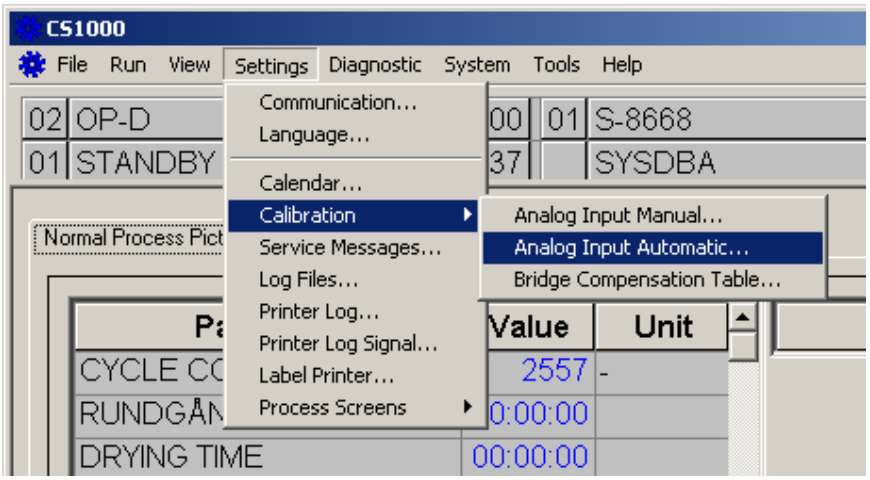

V1563

4. Click Temp booster, Temp chamber and Temp chamb indep (A), then click Calibrate (B).

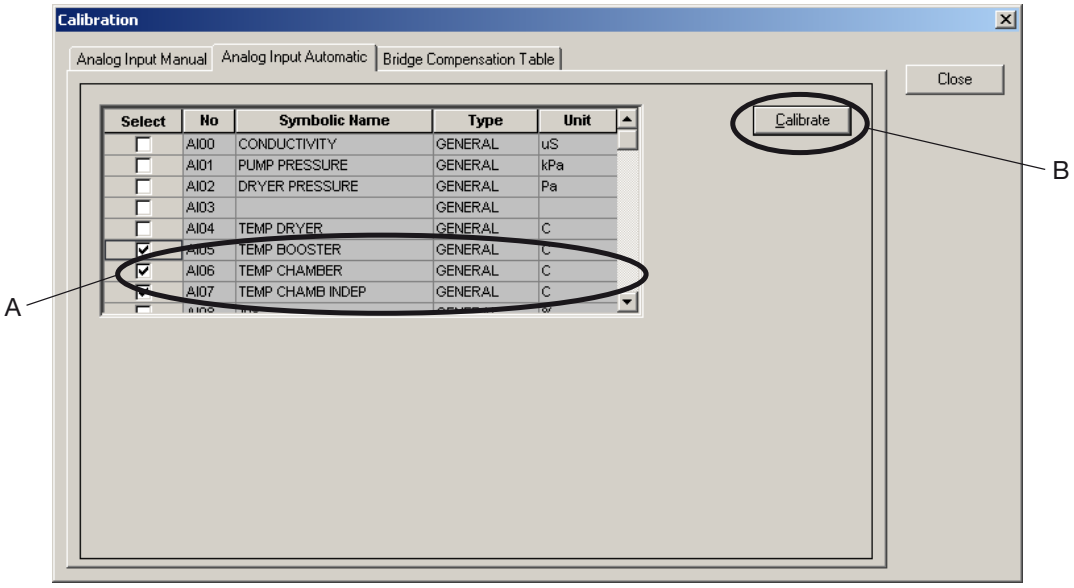

V1570

<Doc_TEC><Doc_502406700><Rel_B><Lang_GB>

Downloaded from www.Manualslib.com manuals search engine

5. Enter the value 20 (C) and click Set Low.

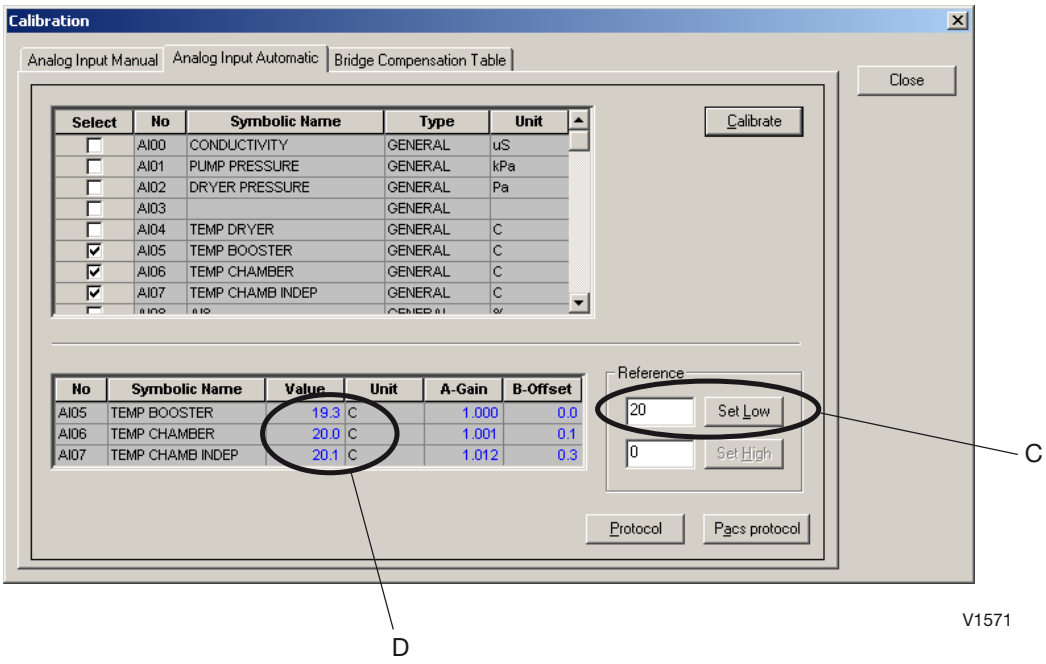

V1571

6. Check that the value (D) rises to 20.
7. Replace resistors for 20 ºC with resistors for 90 ºC.
8. Enter 90 (E) in CS 1000 and click Set High.

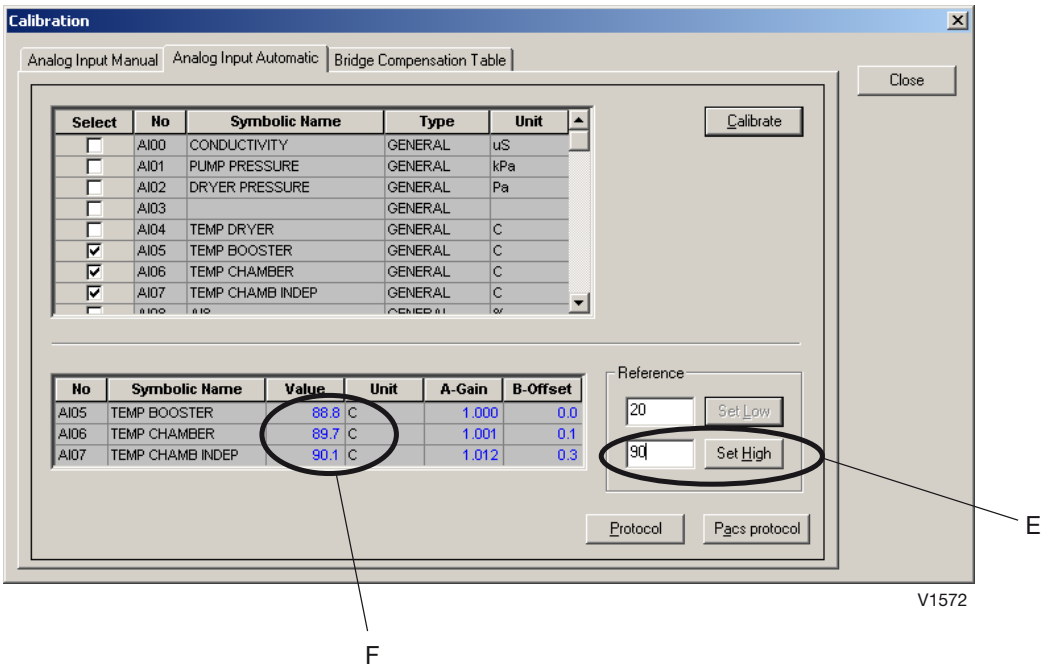

V1572

9. Check that the value (F) rises to 90.
10. Log off CS 1000.
11. Remove the resistors and reinstate the temperature sensors.

<Doc_TEC><Doc_502406700><Rel_B><Lang_GB>

Downloaded from www.Manualslib.com manuals search engine

GETINGE

Temperature sensor - with ice bath and oil bath

Proceed as follows to calibrate the temperature sensors with the aid of an ice bath and an oil bath:

1. Connect a PC with the CS 1000 program installed to the disinfector.
2. Prepare an ice bath and an oil bath.
   The ice bath must consist of crushed ice in a bowl of cold water. The bath must stand for at least 20 minutes so that the temperature can stabilize.
   The oil bath must be switched on for at least 45 minutes at the set temperature (100 ºC) to stabilize the temperature.
3. Remove the temperature sensors from the disinfector. Tape the sensors together.
4. Lower the temperature sensors into the ice bath together with an external thermometer.
5. Start CS 1000 and choose Settings/Calibration/Analog Input Automatic...

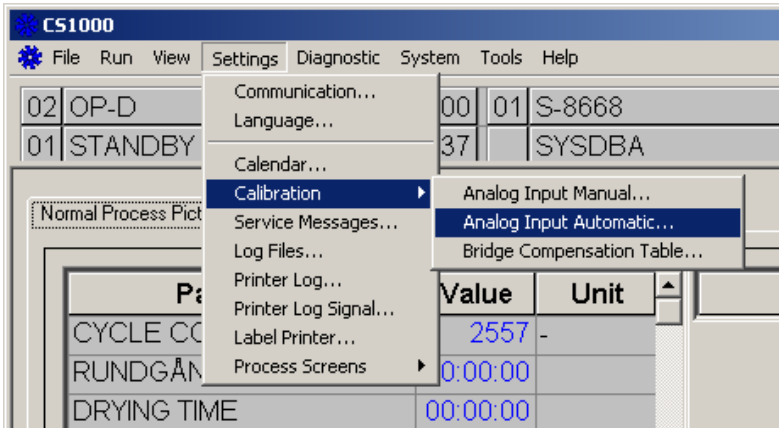

V1563

6. Click Temp booster, Temp chamber and Temp chamb indep (A), then click Calibrate (B).

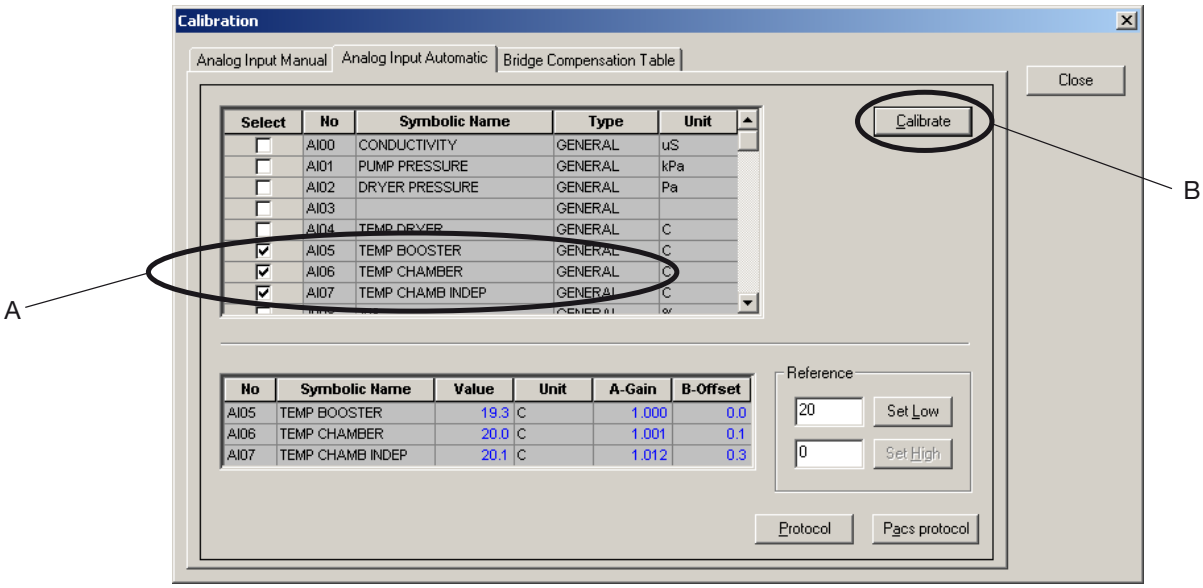

V1571

Downloaded from www.Manualslib.com manuals search engine

7. Check that the reading of the external thermometer stabilizes. Enter the reading of the external thermometer (C) and click Set Low.

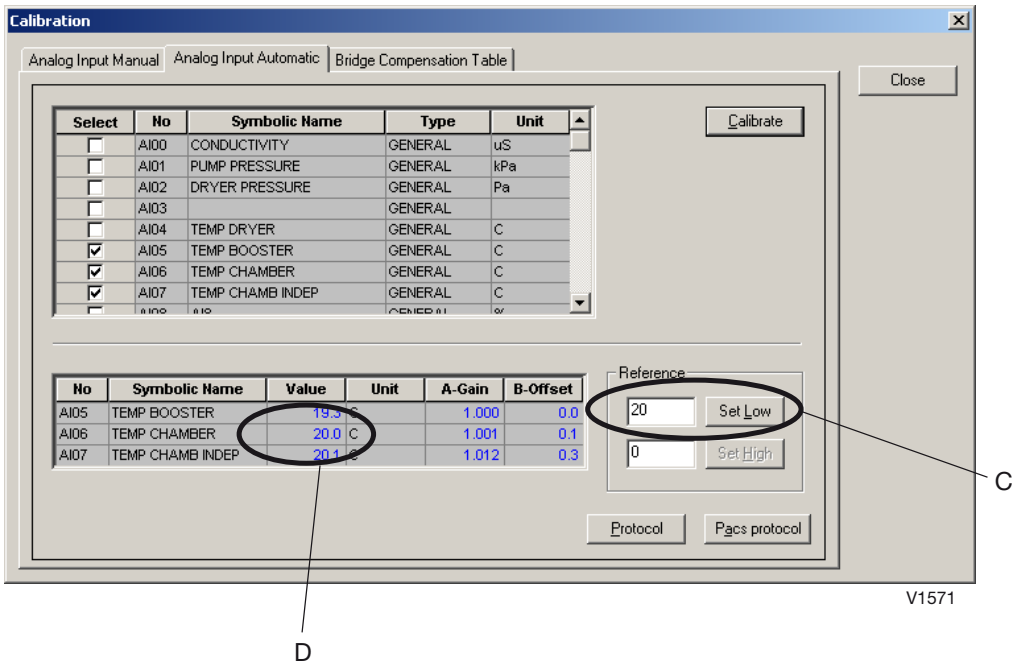

8. Check that the value (D) rises to the set value.
9. Move the temperature sensors and the external thermometer to the oil bath. Check that the reading of the external thermometer stabilizes. Enter the reading of the external thermometer (E) and click Set High.

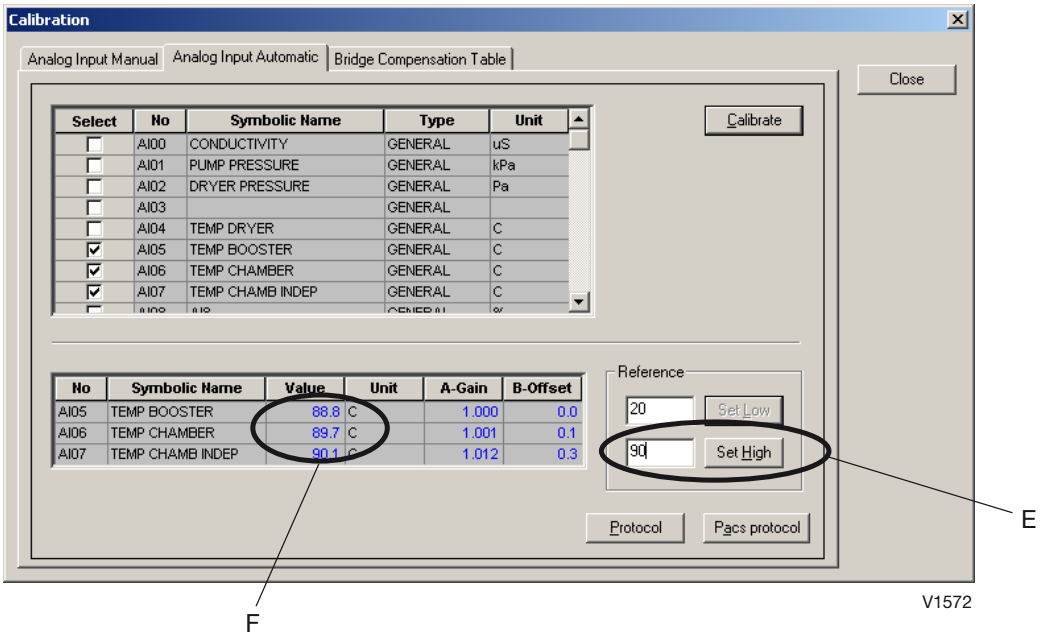

10. Check that the value (F) rises to the set value.
11. Log off CS 1000.
12. Re-instate the temperature sensors.

Downloaded from www.Manualslib.com manuals search engine

GETINGE

Differential pressure gauge for dryer

To calibrate the differential pressure gauge for the dryer, proceed as follows.

1. Connect a PC with the CS 1000 program installed to the disinfector.
2. Close the machine doors.
3. Connect an external differential pressure gauge in parallel with the existing gauge on the machine. Zero the external differential pressure gauge.
4. Start CS 1000 and choose Settings/Calibration/Analog Input Automatic...

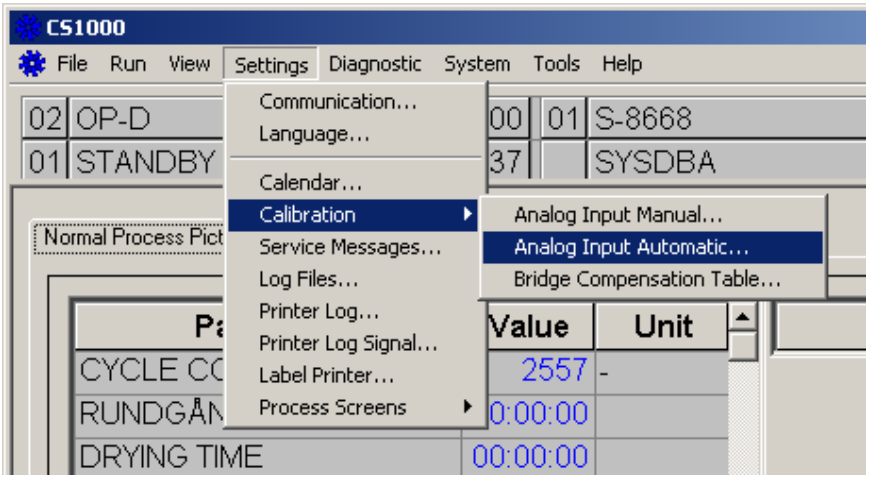

V1563

5. Click Dryer pressure (A) and then Calibrate (B).

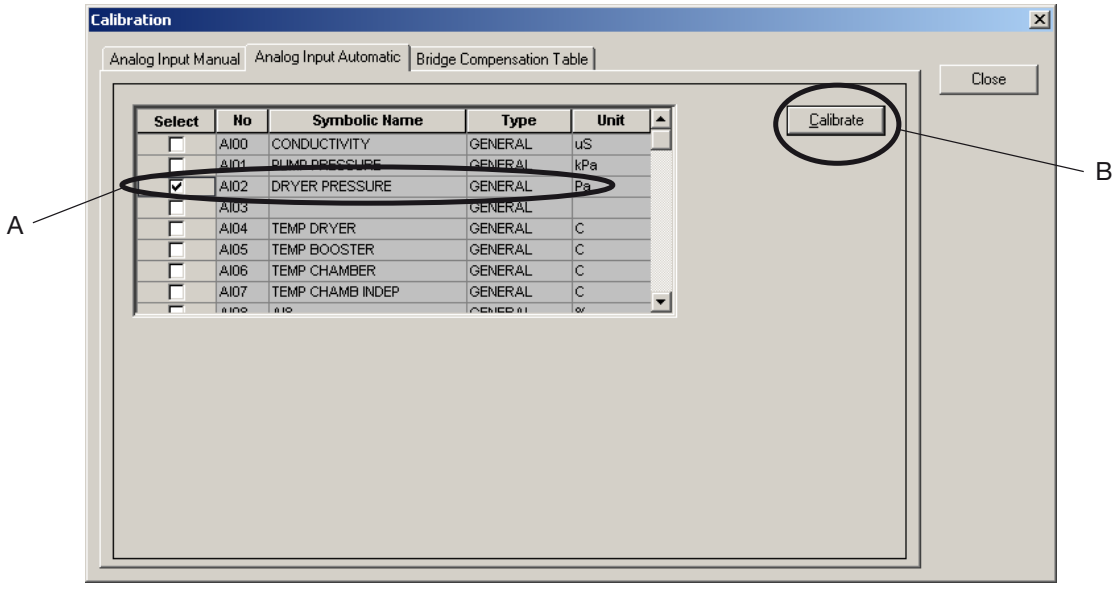

V1573

Downloaded from www.Manualslib.com manuals search engine

6. Enter the value 0 (C) and click Set Low.

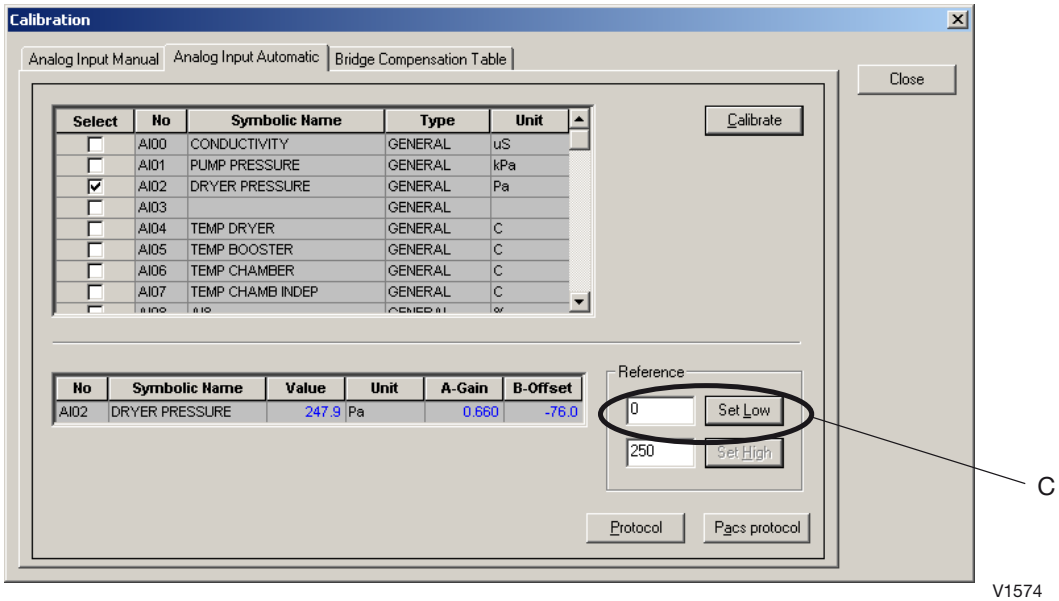

7. Start the machine fan manually as follows:

```
>SETUP
```

Scroll to SETUP with ◈. Press ↵.

```
>SYSTEM
 APPLIANCE INFO
```

Scroll to SYSTEM with ◈. Press ↵.

```
>ENTER PASSWORD
```

Enter password. Press ↵.

```
>SERVICE
 SAVE RAM IN FLASH
```

Scroll to SERVICE with ◈. Press ↵.

```
 SERVICE MESSAGE
>DIAGNOSTICS
```

Scroll to DIAGNOSTICS with ◈. Press ↵.

```
>TEST ANALOG OUT
 TEST DIGITAL IN
```

Scroll to TEST ANALOG OUT with ◈. Press ↵.

Downloaded from www.Manualslib.com manuals search engine

```
>01 FAN SPEED DRYER
 AUT          100%
```

Scroll to 01 FAN SPEED DRYER with ◈. Press ↵.

```
>01 FAN SPEED DRYER
MAN           100%
```

Change AUT to MAN with ◈. Set fan speed to 100 %.

8. Check the reading of the external differential pressure gauge. Enter the reading of gauge (D) in CS 1000 and click Set High.
   The reading should be between 200 and 400 Pa.
   If it is too high, the filter may be clogged; if it is too low, there may be a hole in the filter.
9. Check that the value (E) rises to the reading of the external differential pressure gauge.

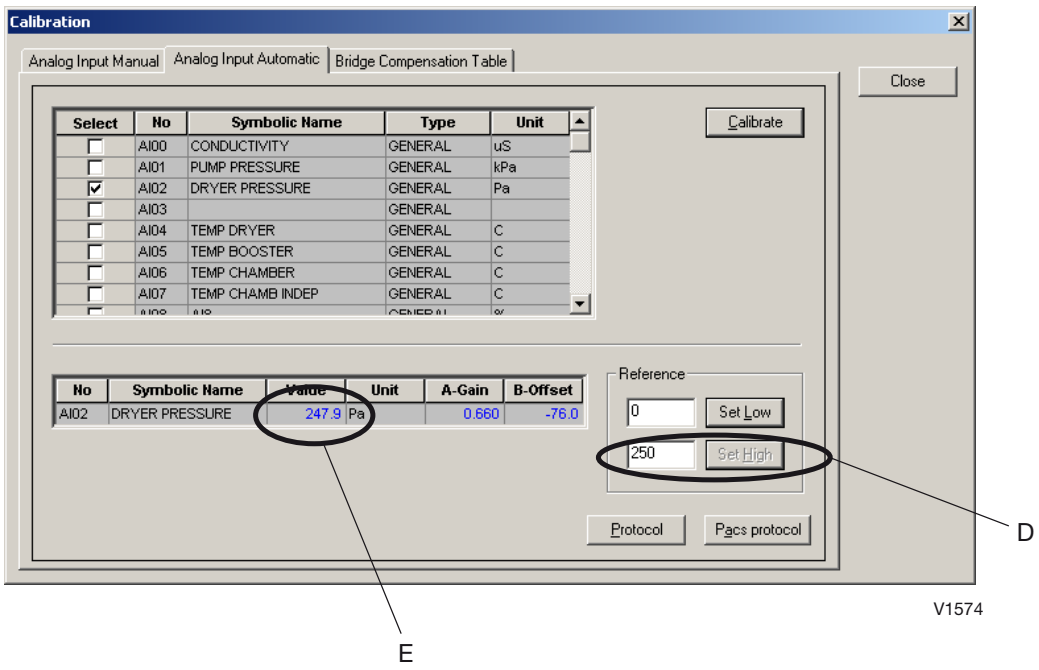

10. Log off CS 1000.
11. Reinstate the fan.

```
>01 FAN SPEED DRYER
MAN           0%
```

Set fan speed to 0 %. **Change MAN to AUT with** ◈.
Press ↵.

12. Log out.
13. Reinstate the differential pressure gauge.

Downloaded from www.Manualslib.com manuals search engine

Dosing pumps and flow transmitters

Calibration of flow transmitters

Calibration of flow transmitters can only be done with CS1000.
Choose Settings – Calibration – Dose monitor automatic.

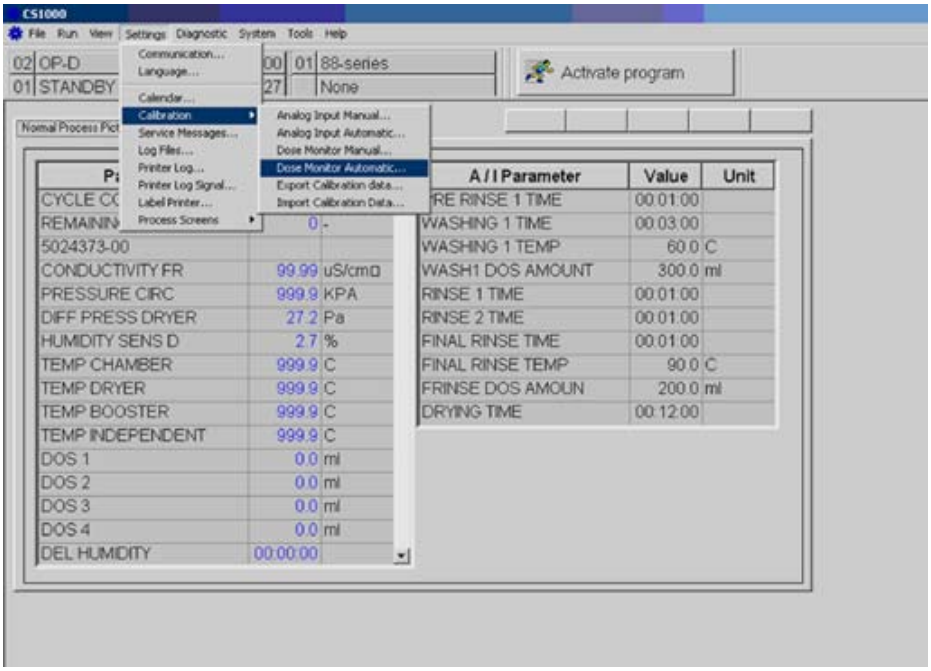

Choose the flow sensors you wish to calibrate by checking them in the boxes on the left (1). Then press Calibrate (2).

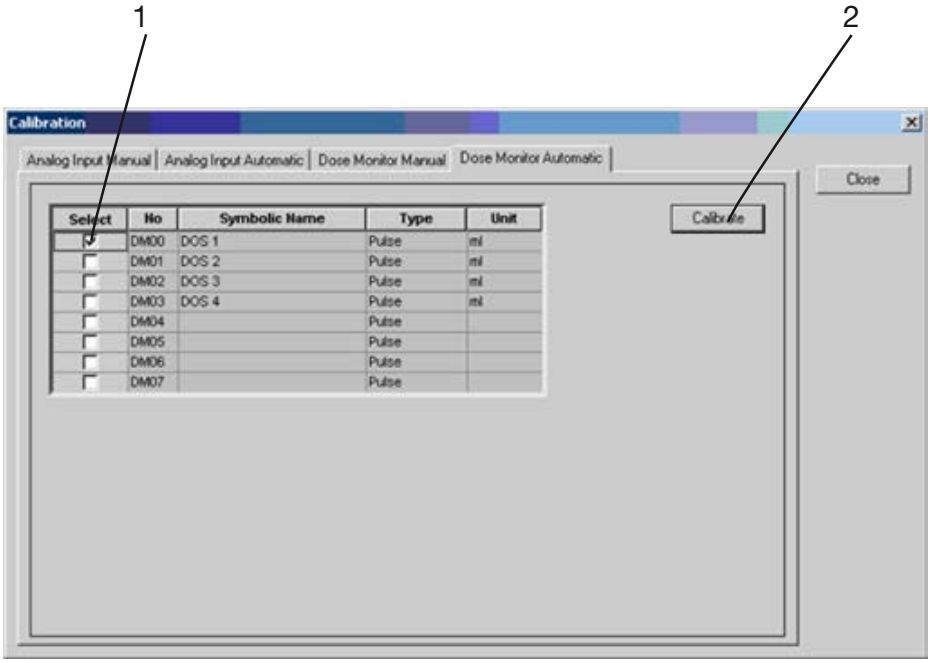

<Doc_TEC><Doc_502406700><Rel_B><Lang_GB>

Downloaded from www.Manualslib.com manuals search engine

Information for the dose monitor(s) you chose is now displayed. Enter the amount of detergent to be dosed, for example 100 ml, in the “Desired volume” field (2). Place a measuring beaker under the detergent inlet in the machine as shown below.

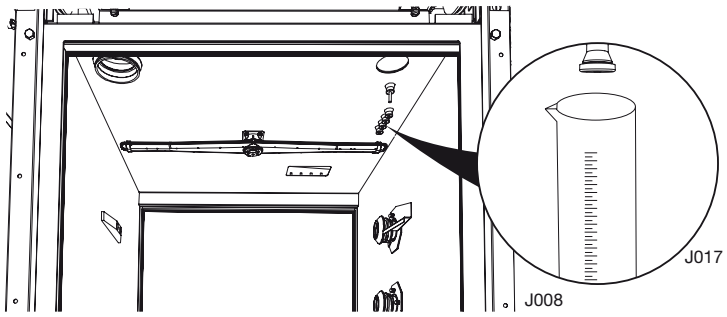

Start calibration by pressing SET (3). The dosing pump starts and detergent is dispensed into the beaker.

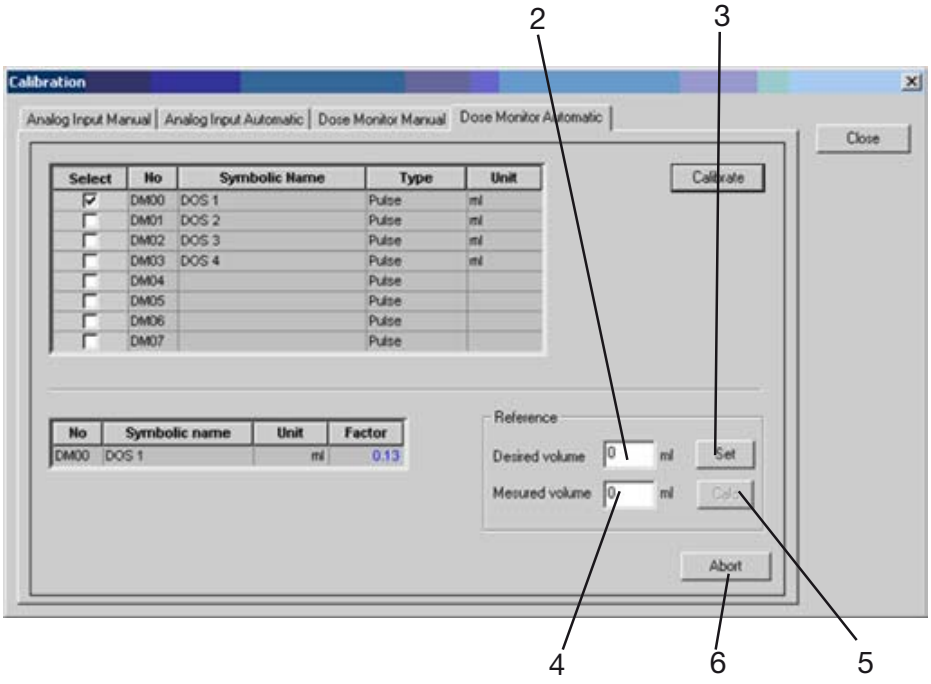

When the pump stops, read off the amount of detergent in the beaker and enter it in the “Measured volume” field (4). Then press Calc. (5).
The calibration constant is now re-calculated and calibration is complete. If something goes wrong during calibration or if you want to cancel calibration for some reason, press the ABORT button (6).

<Doc_TEC><Doc_502406700><Rel_B><Lang_GB>

Downloaded from www.Manualslib.com manuals search engine

Trim panels

Clean side and soiled side

To remove the trim panels, begin by removing the middle panel above and below the door on the side you want to remove. To remove the panel above the door, unscrew the screw in the lower edge of the panel. Then tilt the panel out and lift it down.
To remove the panel below the door, unscrew the screw in middle of the lower edge of the panel. Then push the panel up and lift it off.

To remove the panel above the detergent compartment, unscrew the screws from inside the detergent compartment, then push the panel sideways toward the door.

To remove the panels beside the door on the clean side release them at the top edge. Then lift them off.

Side panels

Start removing the middle panel by unscrewing the screws that retain it at the top edge. Then lift off the panel. Use the same method with the remaining panels.

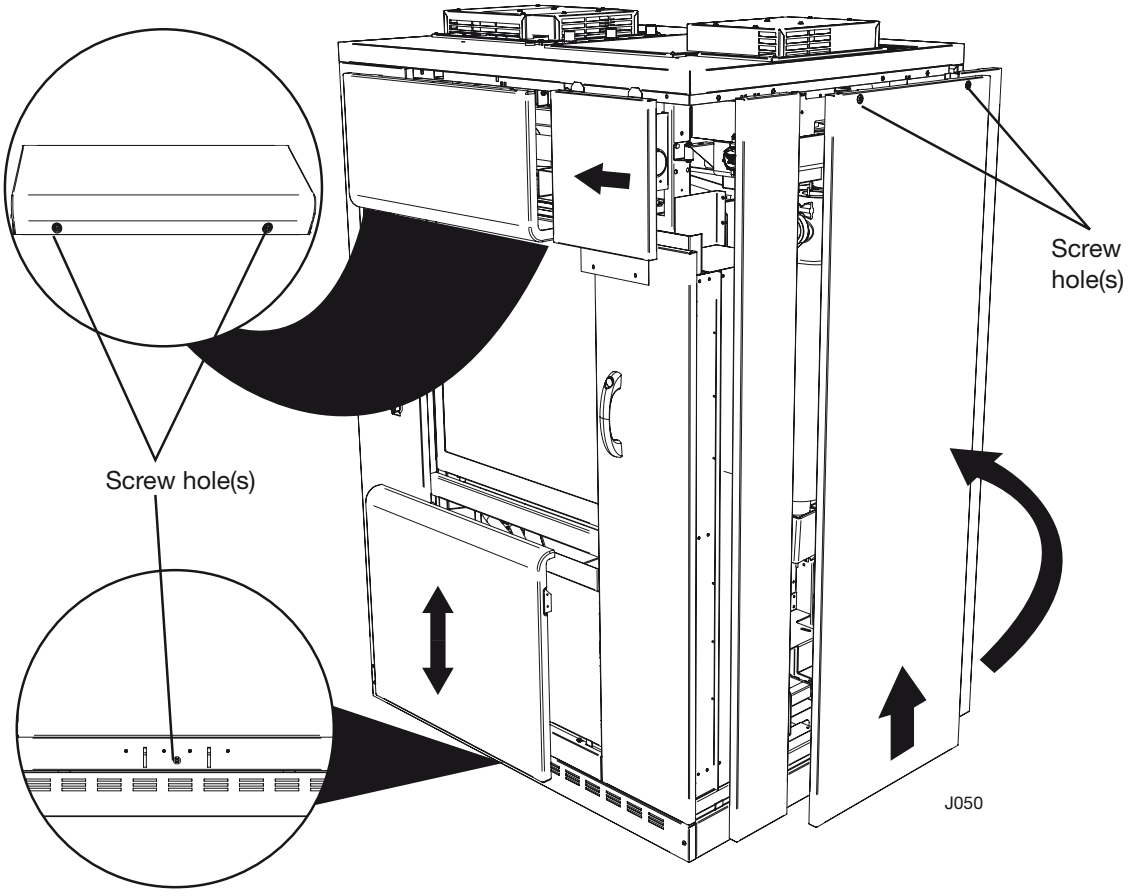

<Doc_TEC><Doc_502406700><Rel_B><Lang_GB>

Downloaded from www.Manualslib.com manuals search engine

GETINGE

Replacing a temperature sensor

This may only be done by authorized personnel.
The machine is connected to the electricity supply and some components are live. Before starting work, make sure that the booster tank and the process tank are fully drained.

Hot surfaces and hot water

In wash chamber and dryer

- Remove the old temperature sensor by pulling it out of the seal.
- Push the new sensor in through the seal.

It is important that the sensor does not penetrate too far into the chamber, since it may be damaged in service.

After replacing a sensor in the chamber, check that the controlling and independent sensors show the same temperature. If not, calibrate as described under Calibration.

In a booster tank

- Remove the old temperature sensor by unscrewing the gland and pulling the sensor out.
- Push in the new sensor and tighten the gland.

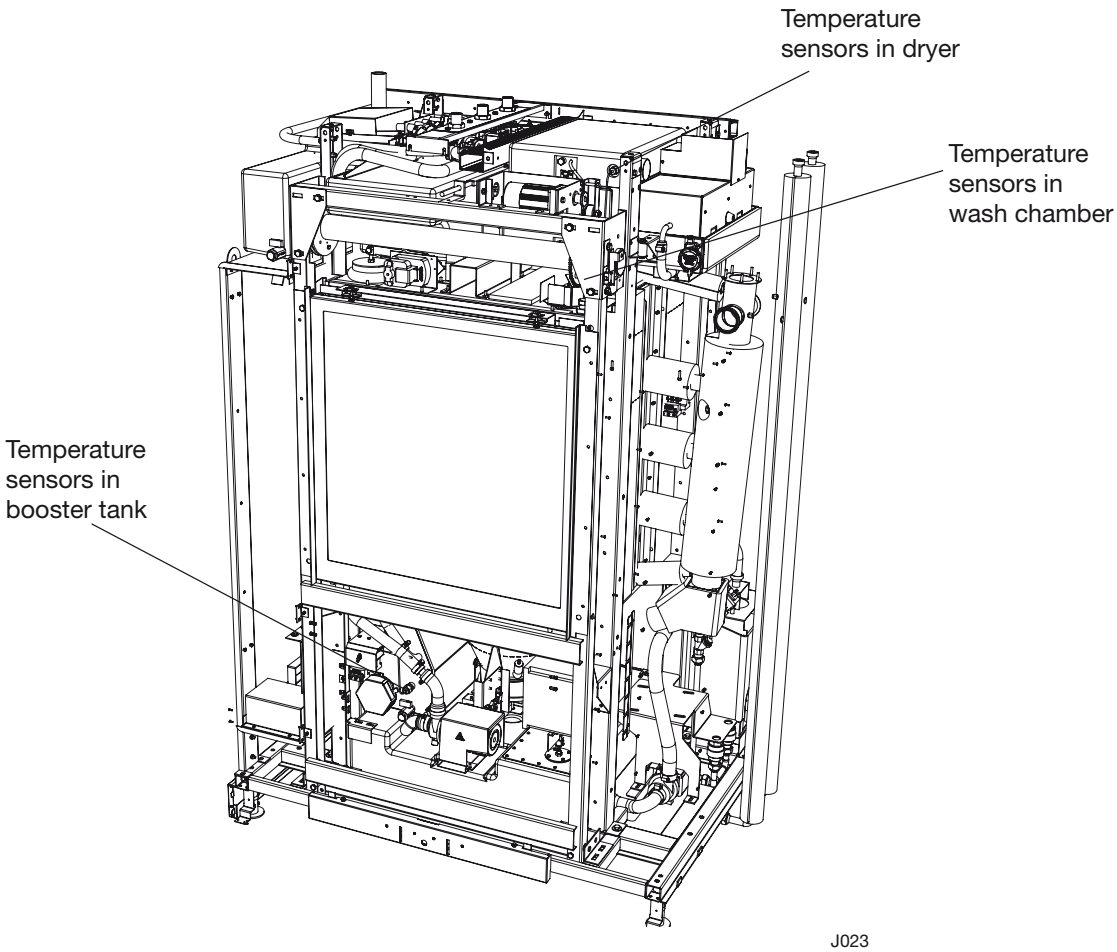

Downloaded from www.Manualslib.com manuals search engine

Door

Position and operation, door switches

This may only be done by authorized personnel.

Before starting work, make sure that the machine is isolated from the electric power supply. Do not use magnetic material when adjusting the "Door locked" switch.

Before starting work, make sure that the booster tank and the process tank are fully drained.

Hot surfaces and hot water

The pictures show the door switches on the machine.

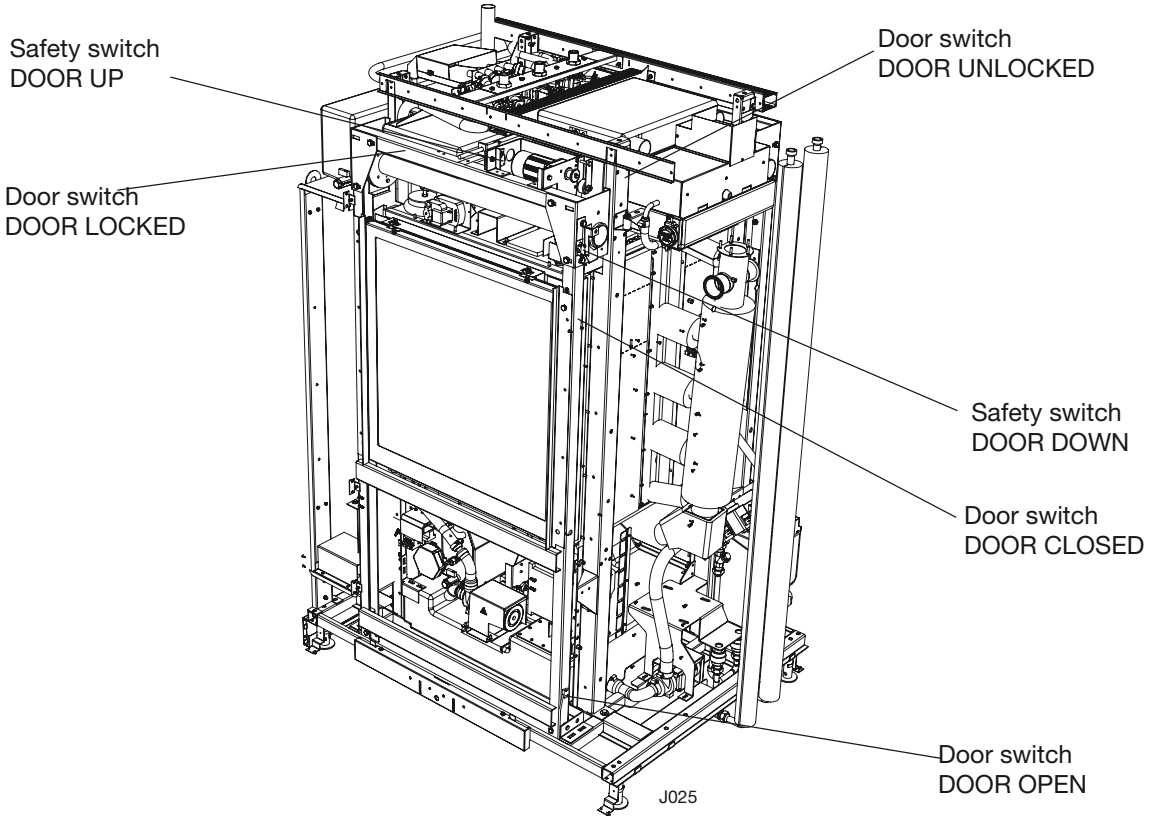

When the door is at its bottom position, the DOOR OPEN switch is activated and when the door is in the top position the DOOR CLOSED and DOOR UNLOCKED switches are activated.

When the motor has pulled the door into its inner position, the DOOR LOCKED switch is activated. If the door is obstructed on its way up and the force on the door is greater than 150 N, the DOOR UP safety switch stops the door. When the door is stopped, the motor drive unit turns around its fixing point and activates the safety switch. For adjustment, see under "Adjusting safety switches, DOOR UP".

If the door is obstructed on its way down, the DOOR DOWN safety switch stops the door. The door is suspended on two wires. If the door is obstructed, the wires continue to be paid out, and a spring force activates the DOOR DOWN safety switch, stopping the door.

Downloaded from www.Manualslib.com manuals search engine

GETINGE

Adjusting door switches

This may only be done by authorized personnel. Before starting work, make sure that the machine is isolated from the electric power supply.

Check that the respective microswitches are activated. Adjust if necessary.

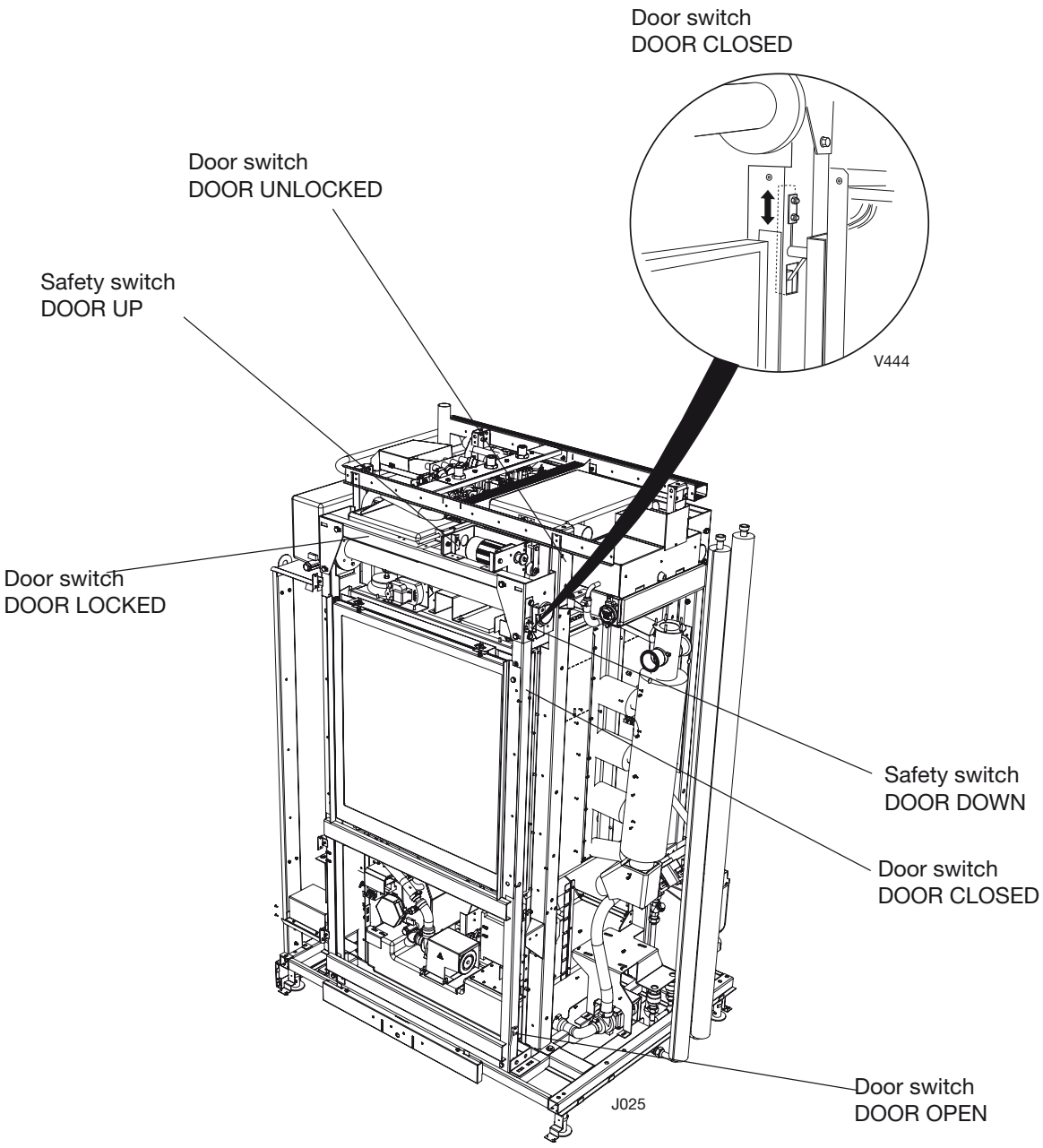

Downloaded from www.Manualslib.com manuals search engine

Adjusting DOOR UP safety switch

This may only be done by authorized personnel.

There are live parts in the machine. Take great care when working on it.

To prevent damage, the spring must be adjusted so that the door stops when a force of 150 N is applied to the door when the door is moving up. The illustration below shows how to adjust the spring.

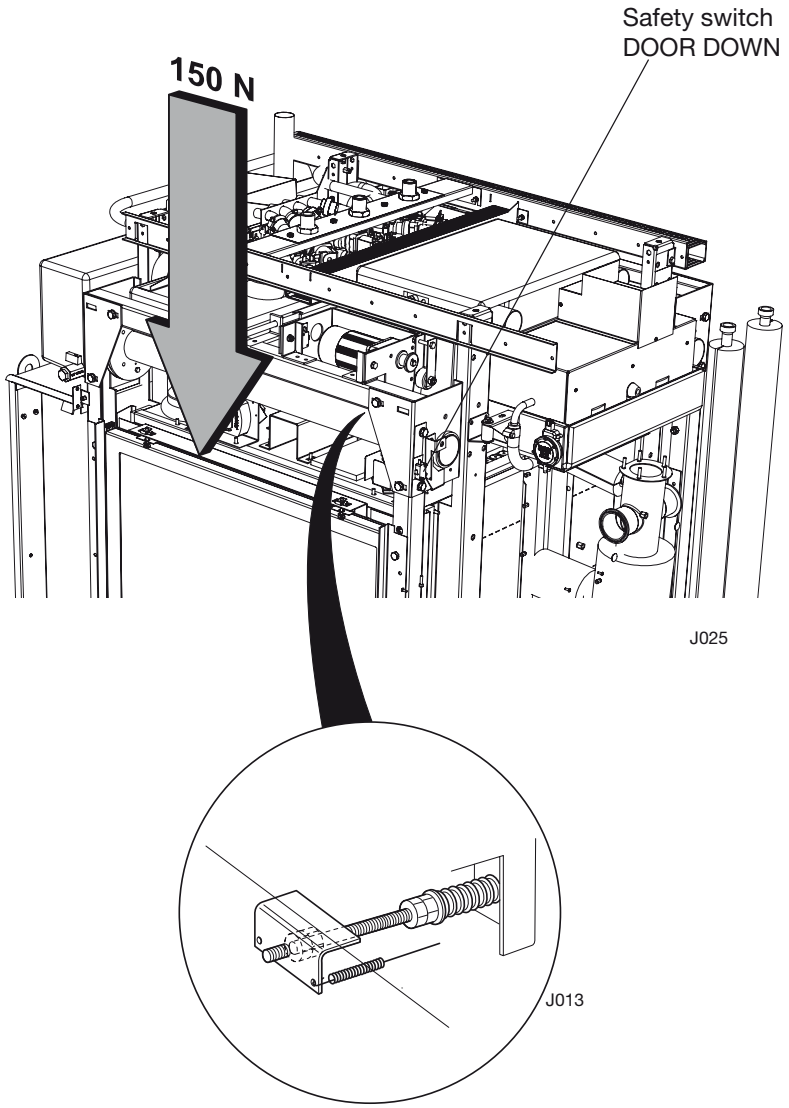

Downloaded from www.Manualslib.com manuals search engine

GETINGE

Replacing the door seal

This may only be done by authorized personnel.
Before starting work, make sure that the machine is isolated from the electric power supply. Before starting work, make sure that the booster tank, process tank and the waste tank are fully drained.

- Remove door switches and bolts. (If a loading/unloading unit is installed, there are door switches on the left-hand side only). This is so that the door can be pushed down far enough to release the seal.
- Push the door down to its lower position.
- Pull off the old seal.
- Fit the new seal and press it firmly into place.
- Install door switches and bolts.

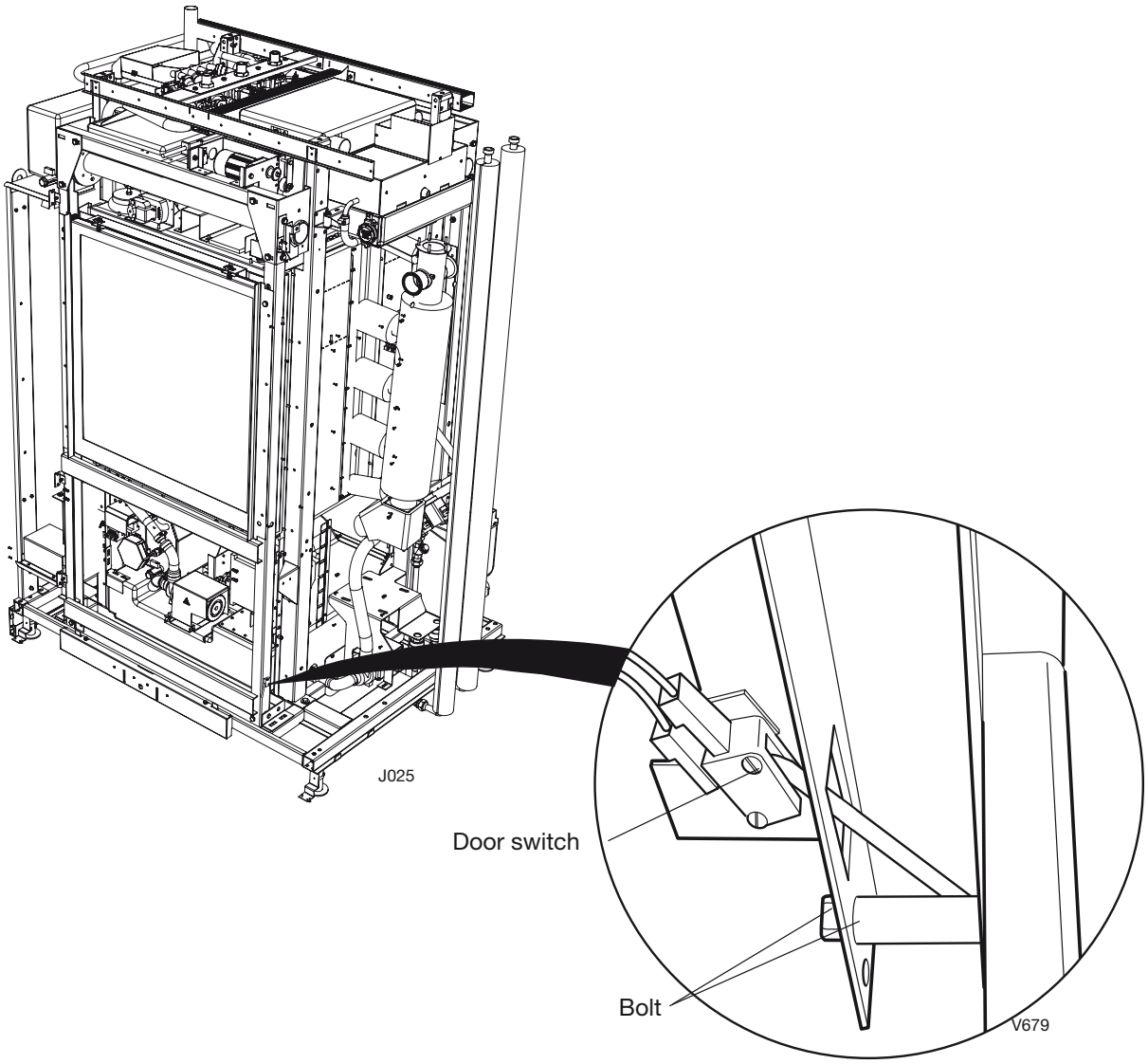

Downloaded from www.Manualslib.com manuals search engine

Removing the door

This may only be done by authorized personnel.
Before starting work, make sure that the machine is isolated from the electric power supply. Before starting work, make sure that the booster tank, process tank and the waste tank are fully drained.

- Remove the front panels.
- Remove door switches and the door switches of the loader/unloader (if there is one). Remove bolts.
- Remove leaf springs, bolts and spacers in the lower part of the frame.
- Remove the drain hose.
- Access the service program; Test the operation of the door.
- Move the door to the half-open position.
- Separate the door frame and the door closing mechanism.
- Free the door frame at the top edge. NOTE: Secure the frame so that it cannot fall forwards.
- Free the lower edge of the door frame. NOTE: Secure the frame so that it cannot fall down and suffer damage.
- The frame and door assembly can now be lifted out and placed on the floor or on a table.
- Release the wire from the door and pulley. There is only one wire secured between the pulleys and the door.

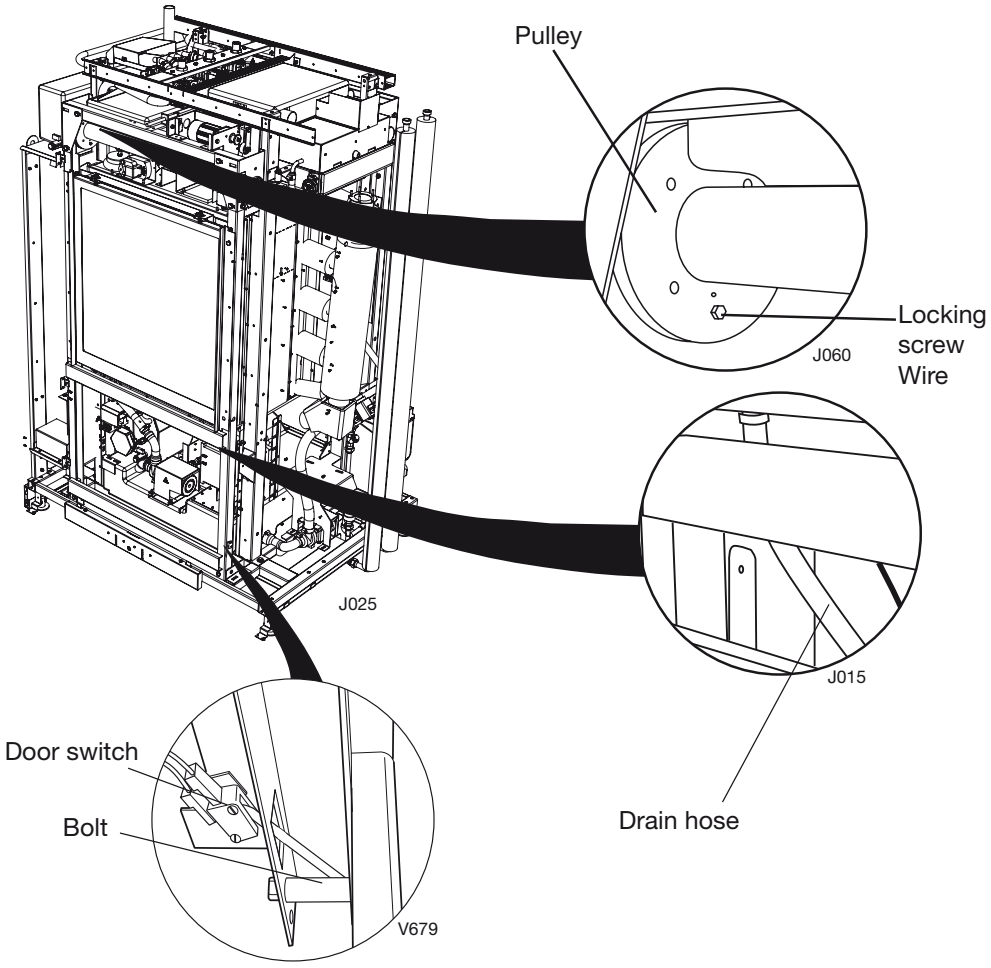

Downloaded from www.Manualslib.com manuals search engine

GETINGE

Adjusting the door closing force

This may only be done by authorized personnel.
Before starting work, make sure that the machine is isolated from the electric power supply. Before starting work, make sure that the booster tank, process tank and the waste tank are fully drained.

When door is in its top position, the motor pulls the door in from the outer to the inner position. The force with which it does this is adjusted with a spring as shown below.

Note:
The spring must never be fully compressed!

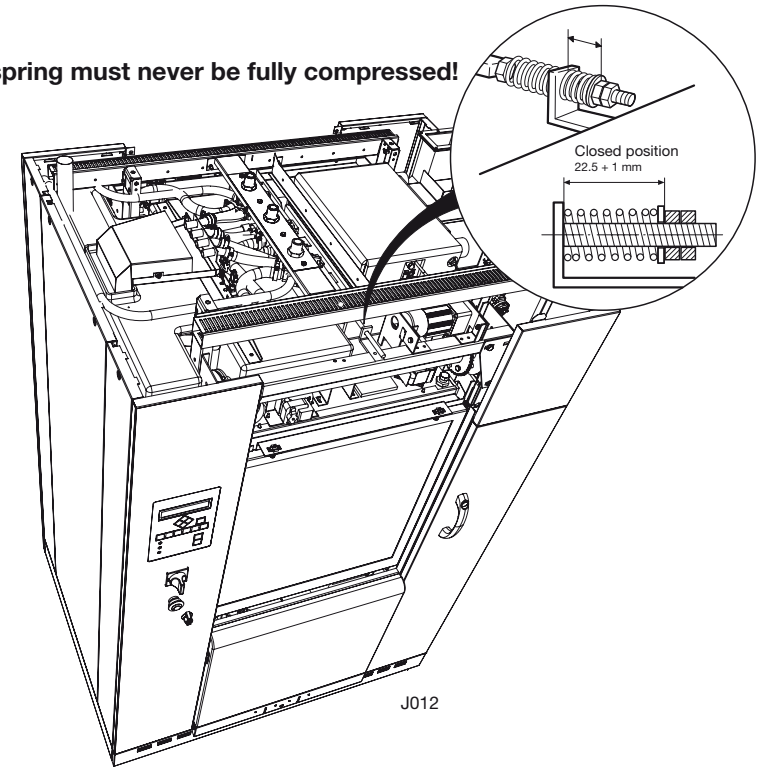

Adjusting the door frame

Hang the door horizontally when it has been attached to the pulleys on both sides. Secure the wire to the door frame with the screws at the top corners of the door.

Downloaded from www.Manualslib.com manuals search engine

Overheat protection

This may only be done by authorized personnel.
Before starting work, make sure that the machine is isolated from the electric power supply. Before starting work, make sure that the booster tank, process tank and the waste tank are fully drained.

Hot surfaces

If the element overheats, the overheat cutout trips. If the overheat cutout has tripped it must be replaced. **The overheat cutouts are not resettable.**

Replacing the overheat protection in the booster tank

1. Dismantle the protective cover over the element.
2. Pull the bulb out of the riser pipe.
3. Dismantle the overheat cutout from its bracket.
4. Install the new overheat cutout in the reverse order.
   Ensure that the bulb bottoms.

Replacing overheat protection in the main pipe

1. Dismantle the protective cover over the element.
2. Pull the bulb out of the riser pipe.
3. Dismantle the overheat cutout from its bracket.
4. Install the new overheat cutout in the reverse order.
   Ensure that the bulb bottoms.

Note:
If the overheat cutout has tripped, both check valves to the dryer must be replaced.
See replacing the check valve in the section Check valve to main pipe.

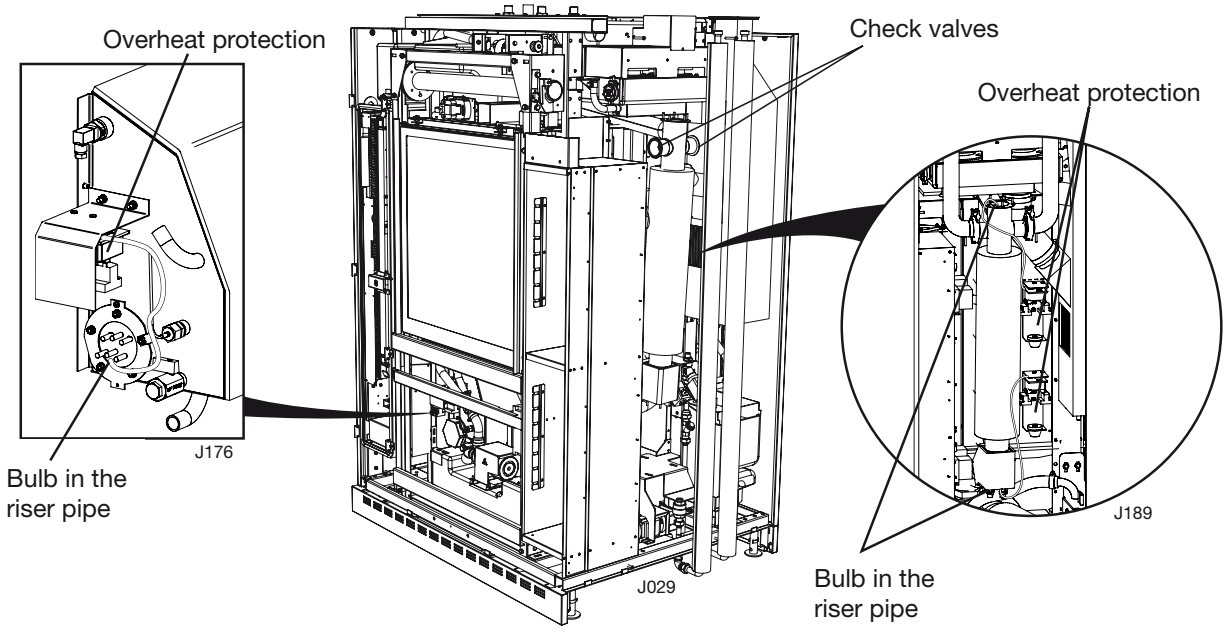

<Doc_TEC><Doc_502406700><Rel_B><Lang_GB>

Downloaded from www.Manualslib.com manuals search engine

GETINGE

Cleaning the water and steam valve

This may only be done by authorized personnel.
Before starting work, make sure that the machine is isolated from the electric power supply. Before starting work, make sure that the booster tank, process tank and the waste tank are fully drained.

The filters in the solenoid valves should be regularly checked and cleaned if necessary.

Water valve

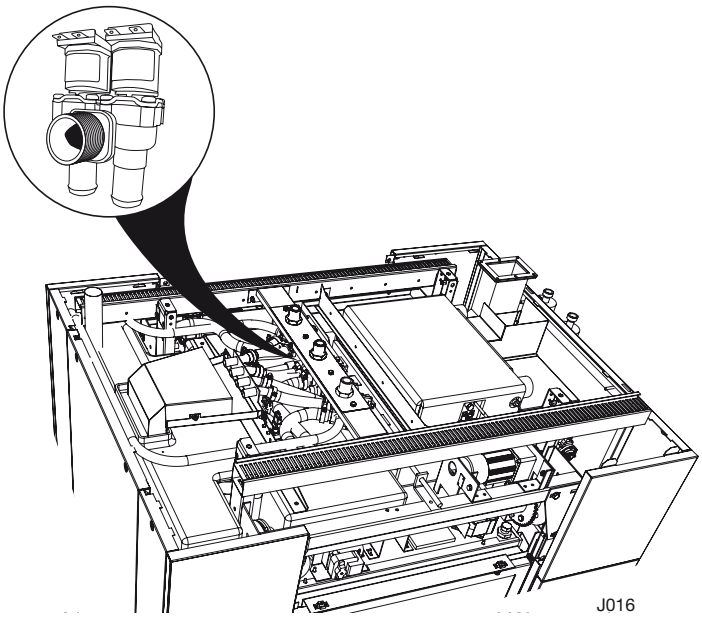

Steam valve

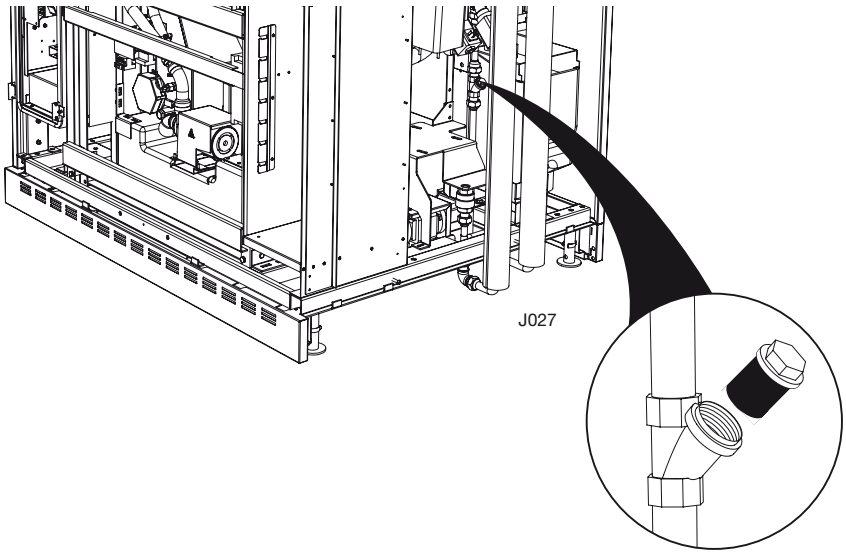

Downloaded from www.Manualslib.com manuals search engine

Dryer

This may only be done by authorized personnel.

Before starting work, make sure that the machine is isolated from the electric power supply. Before starting work, make sure that the booster tank, process tank and the waste tank are fully drained.

- Check seals and hoses for leaks once a year.
- Replace the sterile filter (1) if necessary or in the event of an alarm.
- Make sure that the filter seals tight when reinstalled, otherwise there is a risk of alarm.

Changing the filter

To change the filter, release the clips on either side of the dryer. Tilt back the cover and change the filter. If necessary, adjust the clips so that the cover seals tight.

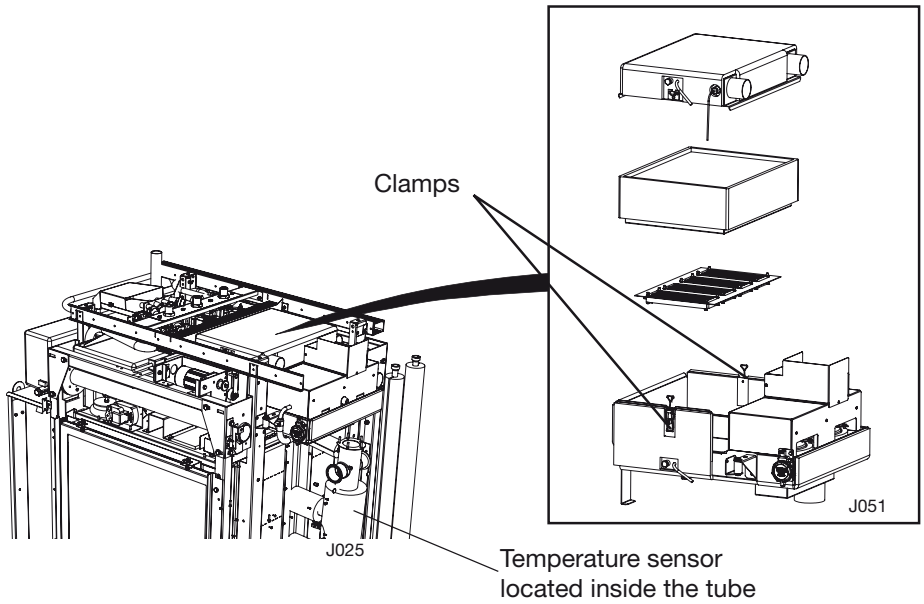

Fan replacement and checking

Lift up the dryer cover and unscrew the screws on the ring that presses the fan down. Lift out the old fan and install the new one. Press the fan down with the ring and refit the screws.

Check valves to main pipe

Unscrew the screws that hold the two pipes together. Separate the pipes and replace the old check valve. It is important that the flap on the check valve is positioned at the top.

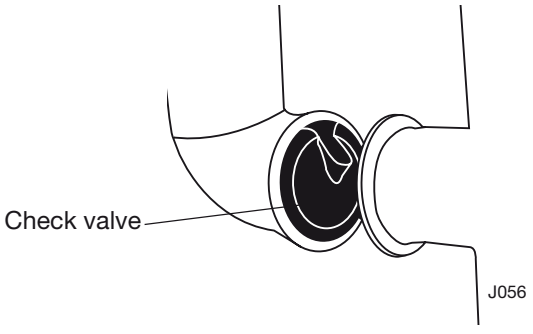

<Doc_TEC><Doc_502406700><Rel_B><Lang_GB>

Downloaded from www.Manualslib.com manuals search engine

GETINGE

Conductivity measurement (extra equipment)

Conductivity is measured with equipment from Endress+Hauser. (If the machine is equipped with a monitoring system, the conductivity must be measured as described under Conductivity measurement in Chapter 9.)

This may only be done by authorized personnel.

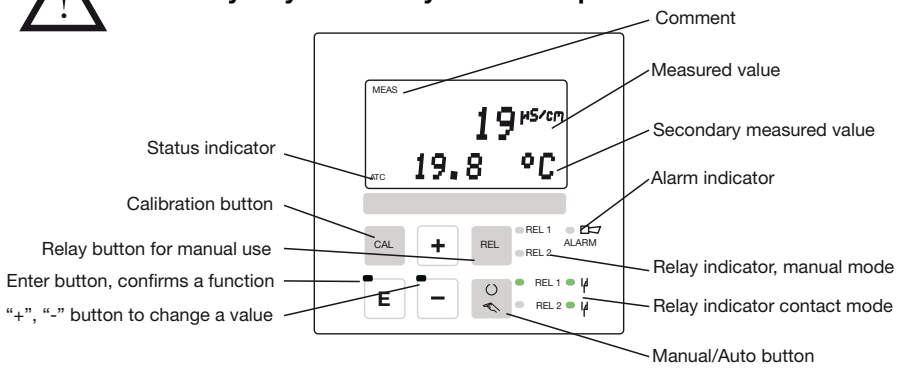

Function in washing process

The conductivity meter monitors the quality of the water in the final rinse, independently of the process control. If the conductivity in the final rinse is higher that the preset value, the machine is emptied and the final rinse is repeated automatically.
If, after three repetitions, the conductivity is still above the preset value, the process is stopped and fault code 11 appears on the display.

Measuring range

The normal measuring range is 0-500 µ S/cm

Check the output signal from conductivity meter

To check the output signal, proceed as follows.

1. Press [E] on the conductivity meter.
2. Enter code 22 with [+] and [−].
3. Press [E]. Setup 1 appears.
4. Choose Output med [+] and [−].
5. Press [E]. Lin appears on the upper line and Sel. Type appears on the bottom line.
6. Press [E].
7. Choose 4-20 mA with [+] and [−].
8. Press [E] .
9. Set 0/4 mA =0.000 µS/cm with [+] and [−].
10. Press [E].
11. Set 20 mA = 500 µS/cm with [+] and [−].
12. Press [E].
13. Press [+] and [−] at the same time to log out.

Setting the cell constant

To set the cell constant, proceed as follows:

1. Press [E] .
2. Enter code 22 with [+] and [−].
3. Press [E]. Setup 1 appears.
4. Press [E] until the display shows Cellconst.
5. With [+] and [−], set the relevant cell constant; see the calibration certificate. (Comes with the sensor).
6. Press [E] three times. The display shows Setup 1.
7. Press [+] and [−] at the same time to log out.

Downloaded from www.Manualslib.com manuals search engine

Replacing the main board

Always remove the flash prom when replacing the main board. After replacing the board, follow the instructions in this manual for cold starting with flash prom.

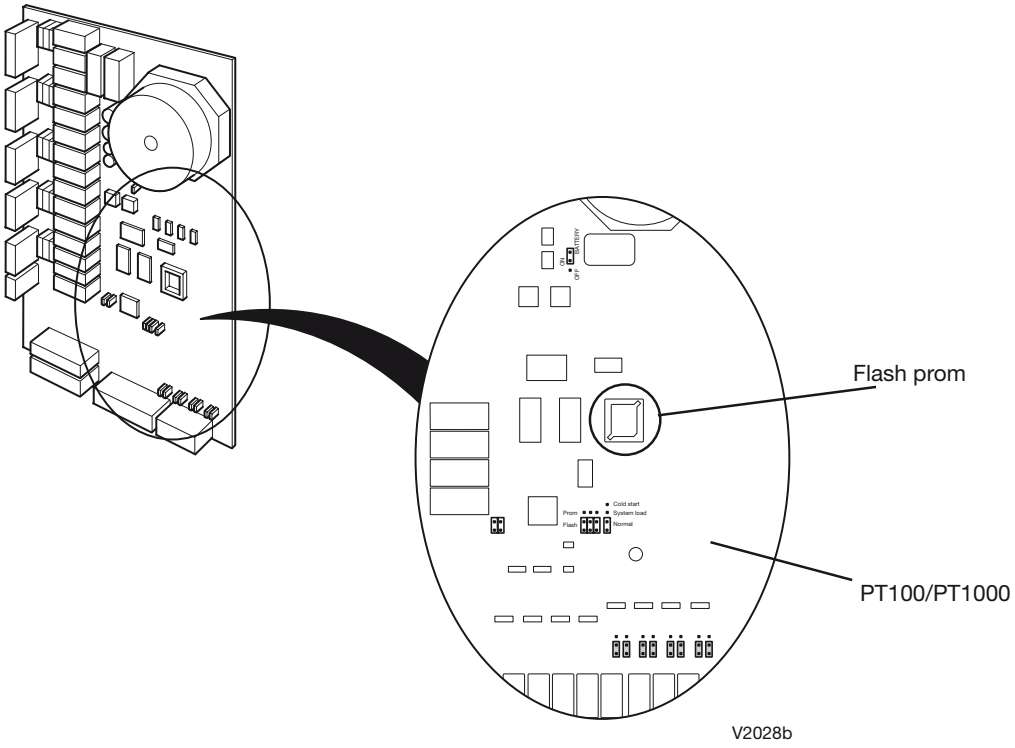

Downloaded from www.Manualslib.com manuals search engine

GETINGE

Replacing the expansion board

The expansion board is jumpered so that the processor can identify which card is which. Jumpers may have to be repositioned when a board is replaced. Jumpering is done as shown in the illustration. Set the potentiometer to its maximum position.

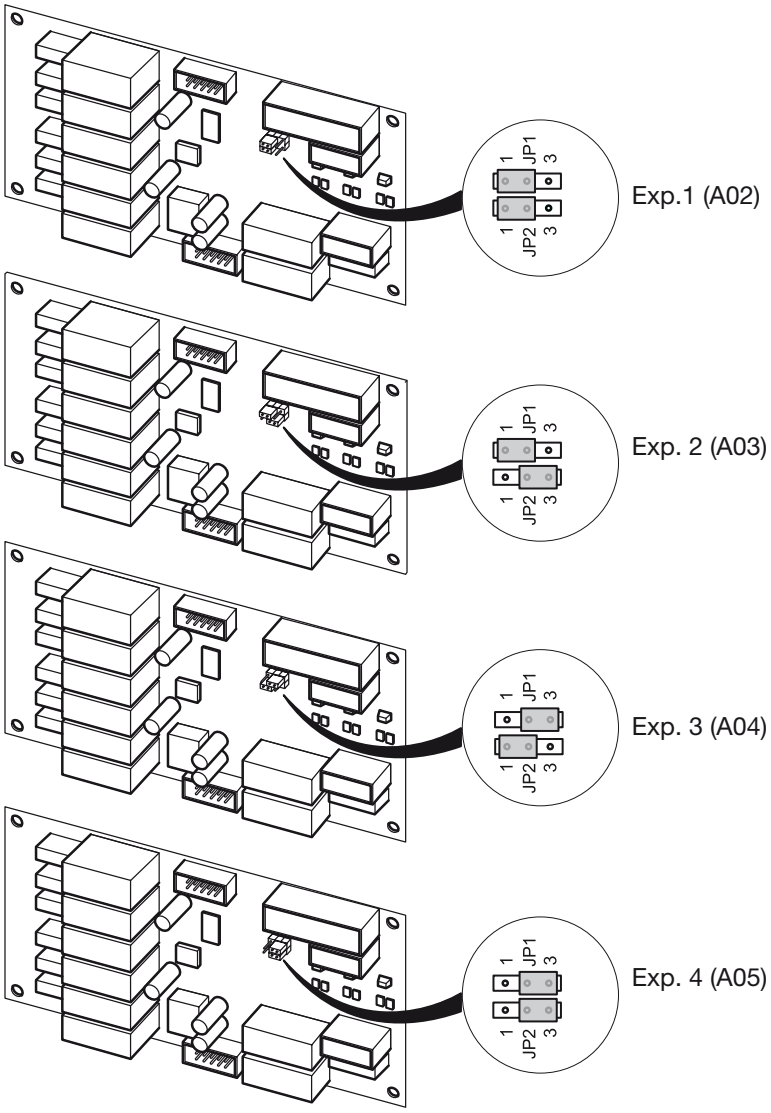

V2029b

Downloaded from www.Manualslib.com manuals search engine

Replacing fuses

Electrically heated

Fuse			
Tag no.	**Rang**	**Rated Current**	**Description**
-F01		16 A	Heater #1 Chamber
-F02		16 A	Heater #2 Chamber
-F03		16 A	Heater Booster tank
-F04		13A	Heater Dryer unit
Fuse			
Tag no.	**Type**	**Rated Current**	**Description**
-F11	C	10A	Frequency Converter
-F12	C	20 A	Main supply
-F13	C	10A	Dryer Fan #1
-F14	C	10A	Dryer Fan #2
-F15	C	6A	Main supply Control voltage
-F16	C	4 A	Main supply PACS300
-F101	T	500mA	Conductivity transmitter
-F102	T	500mA	Digital outputs
-F103	T	500mA	Power Supply Infeeder
-F104	T	500mA	Power Supply Outfeeder
-F105	T	500mA	Hardware Interlocks
-F106	T	500mA	Printer
-F201	T	500mA	Auto Scanner
-F202	T	500mA	Hand scanner
-F203	T	2 A	T-doc card

Downloaded from www.Manualslib.com manuals search engine

Steam heated

Fuse			
Tag no.	**Rang**	**Rated Current**	**Description**
-F04		13A	Heater Dryer unit
Fuse			
Tag no.	**Type**	**Rated Current**	**Description**
-F11	C	10A	Frequency Converter
-F12	C	20 A	Main supply
-F13	C	10A	Dryer Fan #1
-F14	C	10A	Dryer Fan #2
-F15	C	6A	Main supply Control voltage
-F16	C	4 A	Main supply PACS300
-F101	T	500mA	Conductivity transmitter
-F102	T	500mA	Digital outputs
-F103	T	500mA	Power Supply Infeeder
-F104	T	500mA	Power Supply Outfeeder
-F105	T	500mA	Hardware Interlocks
-F106	T	500mA	Printer
-F201	T	500mA	Auto Scanner
-F202	T	500mA	Hand scanner
-F203	T	2 A	T-doc card

<Doc_TEC><Doc_502406700><Rel_B><Lang_GB>

Downloaded from www.Manualslib.com manuals search engine

Replacing a hose to a hose pump

This may only be done by authorized personnel.
Before starting work, make sure that the machine is isolated from the electric power supply.

There are three grades of hose for installation in the pump, depending on the detergent used. For article numbers see the spare parts list.

- Remove the cover (3) by unscrewing screw A.
- Disconnect the hoses at connections B and C.
- Take out the entire unit including hose (2) (a complete spare parts kit).
- Install the new unit.
- Refit the cover.
- Always check the dosing amount after replacing a pump and/or a hose.

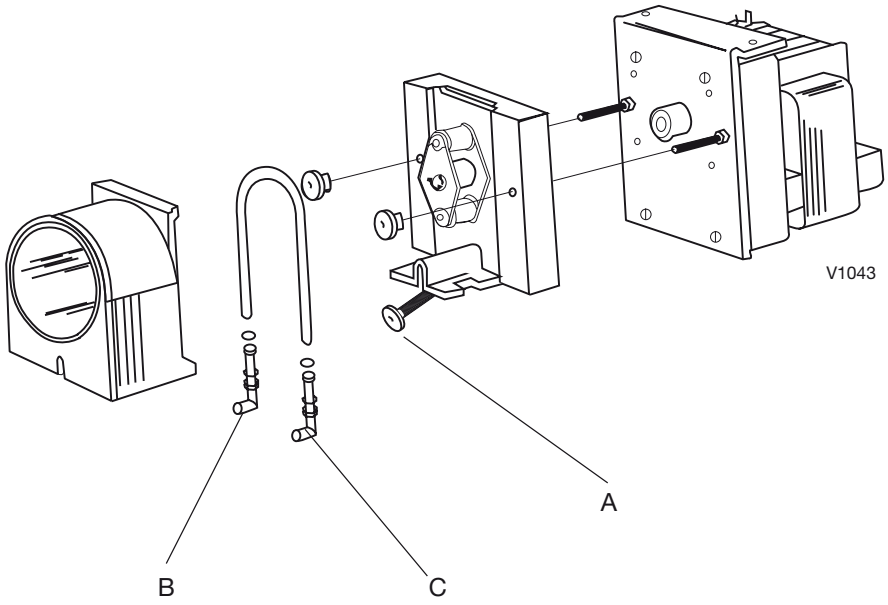

*References on electrical diagram

Downloaded from www.Manualslib.com manuals search engine

GETINGE

Setting detergent and rinse-aid quantities

This may only be done by authorized personnel.

The machine is connected to the electricity supply and some components are live.

- Dispense detergent or rinse-aid into a measuring beaker. Check that the suction hose and pump are full before the check.
- Push the suction hose down into the beaker and measure the consumption during an entire cleaning program. Lift up the hose when reading the volume. Adjust if necessary and repeat the measurement until the amount conforms to the manufacturer's recommendations (see Calibration of flow transmitters in this manual).
- If necessary, adjust the dosing time in the service program.

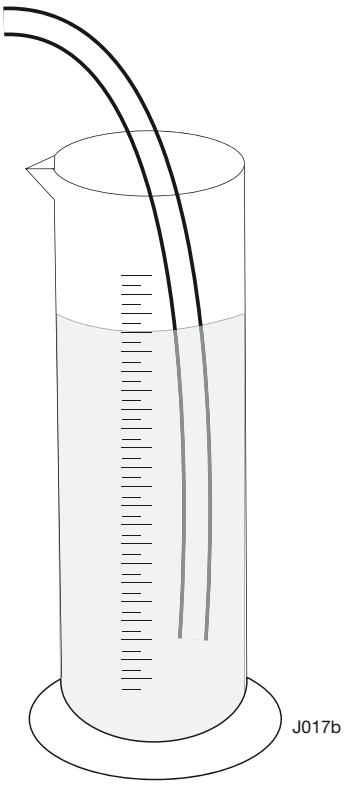

Downloaded from www.Manualslib.com manuals search engine

Servicing the booster tank

It is essential to drain the process tank and the booster tank when servicing the booster tank and its valves. This is in order to prevent scalding, since the temperature of the water in the booster tank is about 90°C.

Hot parts

Booster tank with drain tap

If machine has not been used for some time (48 hours) the booster tank must be drained and program number 16 run.
To drain the booster tank, dismantle the front trim panels on the soiled side. Drainage is then done via a drain valve located on the soiled side of the tank. Make sure that the tap is not open before unscrewing the plug. If a nipple with G ¼ male thread is used, together with the associated hose, the hose can be fitted to the drain tap. The tank can now be drained. The capacity of the tank is about 32 litres.
After draining, check that the drain tap is working properly. Seal the plug with PTFE tape and refit it.
The microswitch must be checked as well, since it activates the booster tank.

When servicing is complete, check the entire system for water leaks.
The booster tank must be refilled before a process is started. To do this, open the DW valve via the control system. This is important, in order to avoid unwanted fault codes when starting the machine.

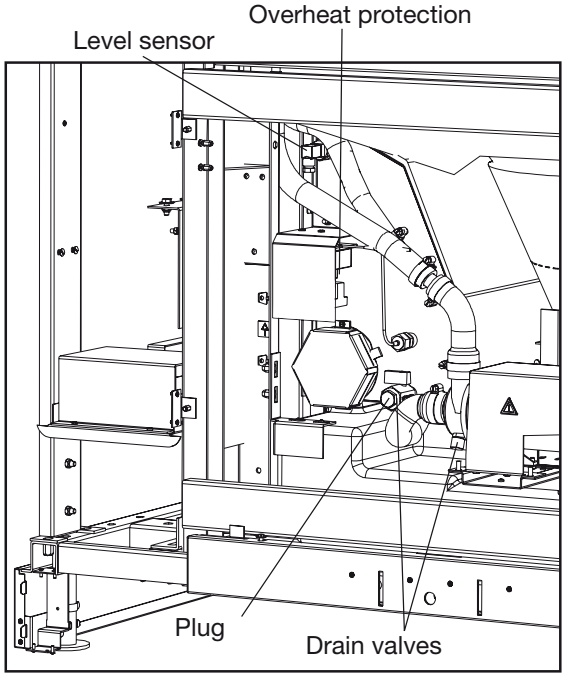

Overheat protection

If the element overheats, the overheat cutout trips. If the overheat cutout has tripped it must be replaced. **The overheat cutouts are not resettable.**

<Doc_TEC><Doc_502406700><Rel_B><Lang_GB>

Downloaded from www.Manualslib.com manuals search engine

GETINGE

Process valve and diaphragm

This may only be done by authorized personnel.

Before starting work, make sure that the machine is isolated from the electric power supply. Before starting work, make sure that the booster tank, process tank and the waste tank are fully drained.

Hot surfaces and hot water

Checking

Check for leaks and visible damage. Check that there is no dirt or deposit on the diaphragm.

Adjusting (adjustment allowances)

To adjust the process valve, turn the nut on the top of the diaphragm. The distance from the top edge of the plastic to the bottom edge of the bolt attachment must be 19 mm.

Repair

Remove the roof and lift up the process tank. Then release the motor fixing and unscrew the hose clips that retain the diaphragm. Lift out the old motor and install the new one. Re-assemble in the reverse order.

Replacing the diaphragm

Empty the tank (max 55 litres). Lift up the process tank and remove the pin that holds the arm in place. Loosen the hose clip between the tank and the diaphragm. Press out the diaphragm from inside the chamber. Replace the diaphragm at five-year intervals.

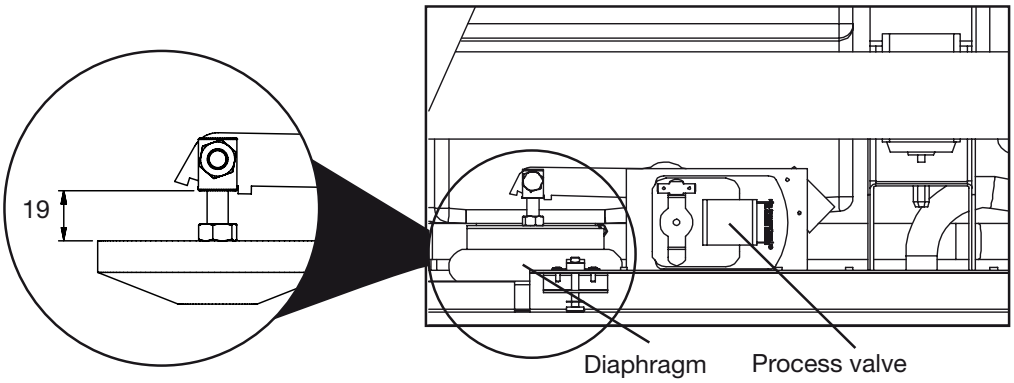

J052

Downloaded from www.Manualslib.com manuals search engine

Booster pump

This may only be done by authorized personnel.
Before starting work, make sure that the machine is isolated from the electric power supply.

Before starting work, make sure that the booster tank, process tank and the waste tank are fully drained.

The pump body may be electrically live.
Before starting work, make sure that the pump body is not live.

Hot surfaces

Separate connector -M14-X1. Unscrew the hose clips and disconnect the hoses from the pump.
Unscrew the fixing screws and remove the pump. Install the new pump, reconnect the hoses and tighten the hose clips. Check the hose connections.
Re-connect connector -M14-X1.

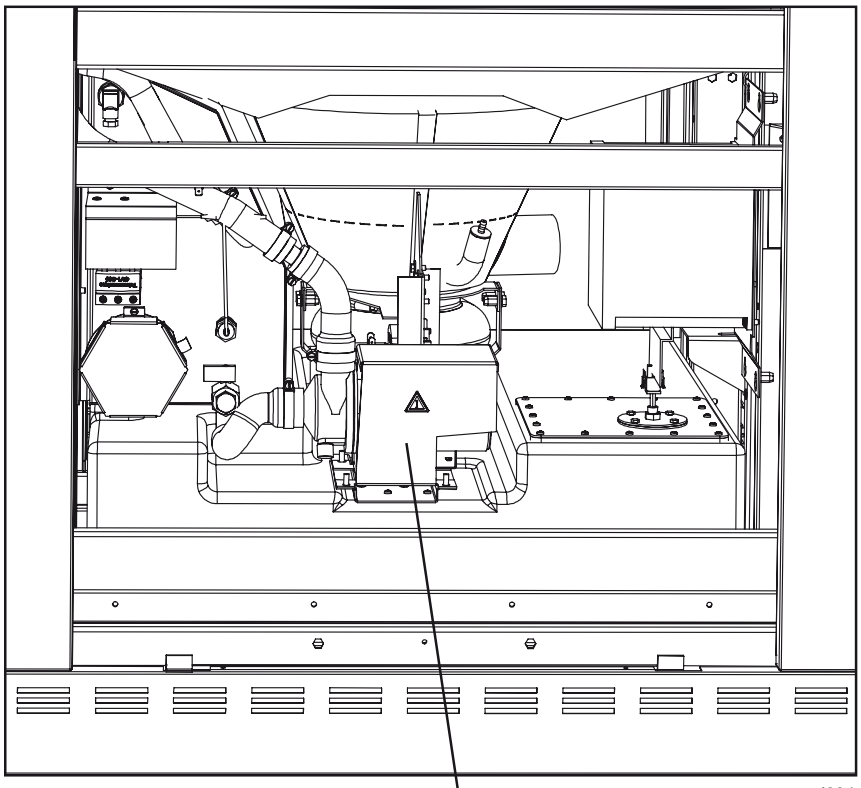

Downloaded from www.Manualslib.com manuals search engine

Process tank

This may only be done by authorized personnel.

Before starting work, make sure that the machine is isolated from the electric power supply.

Before starting work, make sure that the booster tank, process tank and the waste tank are fully drained.

Hot surfaces and hot water

Draining the process tank

The process tank is drained via the drain valve above the electrical cabinet. Connect a hose to the valve and then drain the tank.

Replacing a sensor

Remove the sensor from the tank and fit a new one.

Cleaning

Disconnect the hose from the water inlet. Using a brush, clean the inside of the tank through the hole.

Disinfecting the process tank

To disinfect the process tank, run program 16.

Volume calibration

Dispense 40 litres of water into the tank. Adjust the level sensor until you get a signal for the middle level (-B24).

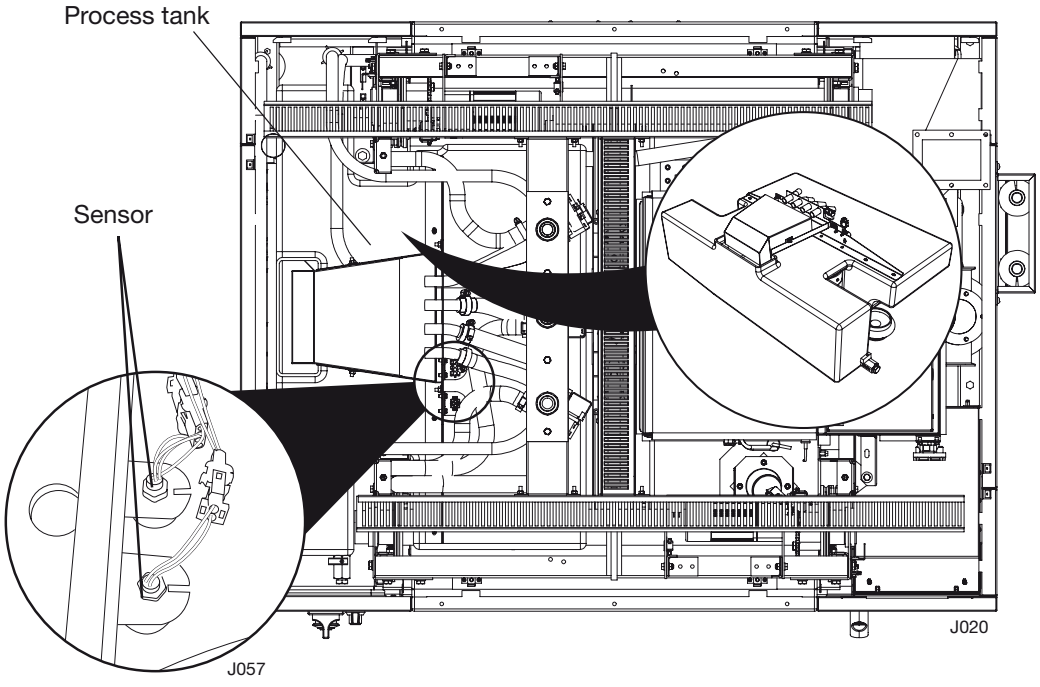

Downloaded from www.Manualslib.com manuals search engine

Hose routing for process tank with top connection

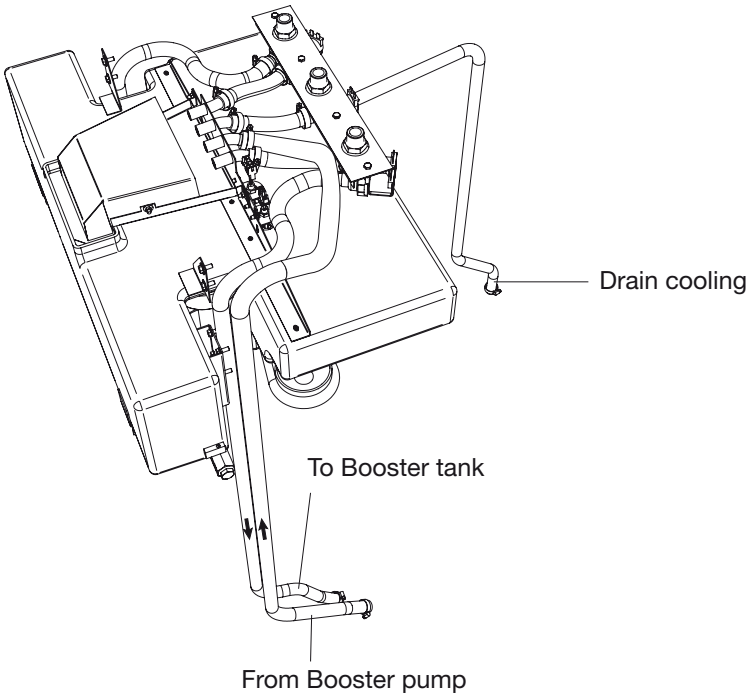

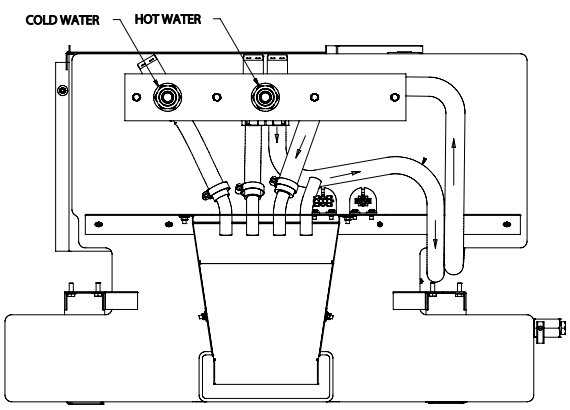

Cold water and hot water

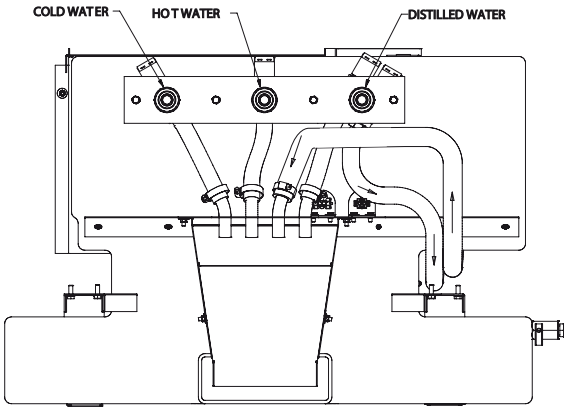

Cold water, hot water and distilled water

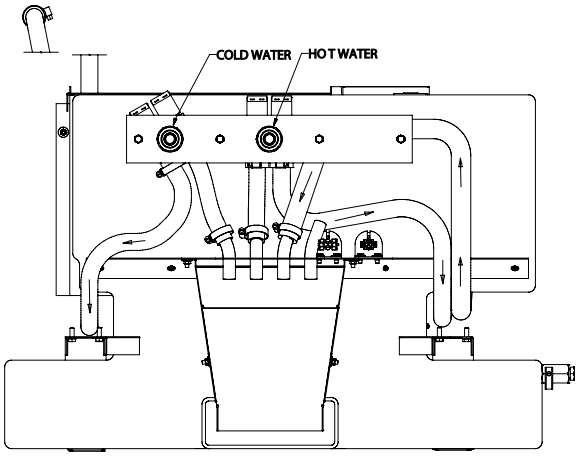

Cold water and hot water with drain cooling

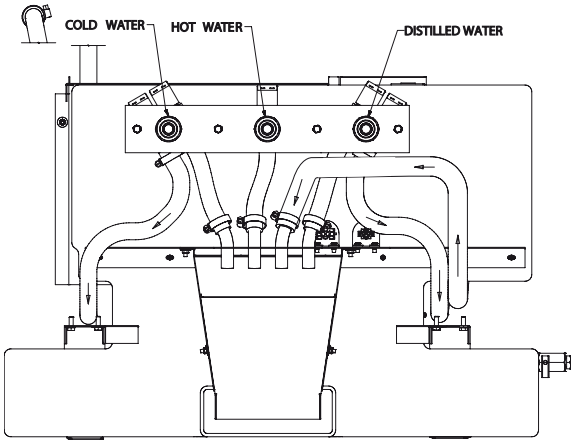

Cold water, hot water and distilled water with drain cooling

<Doc_TEC><Doc_502406700><Rel_B><Lang_GB>

Downloaded from www.Manualslib.com manuals search engine

GETINGE

Hose routing for process tank with floor connection

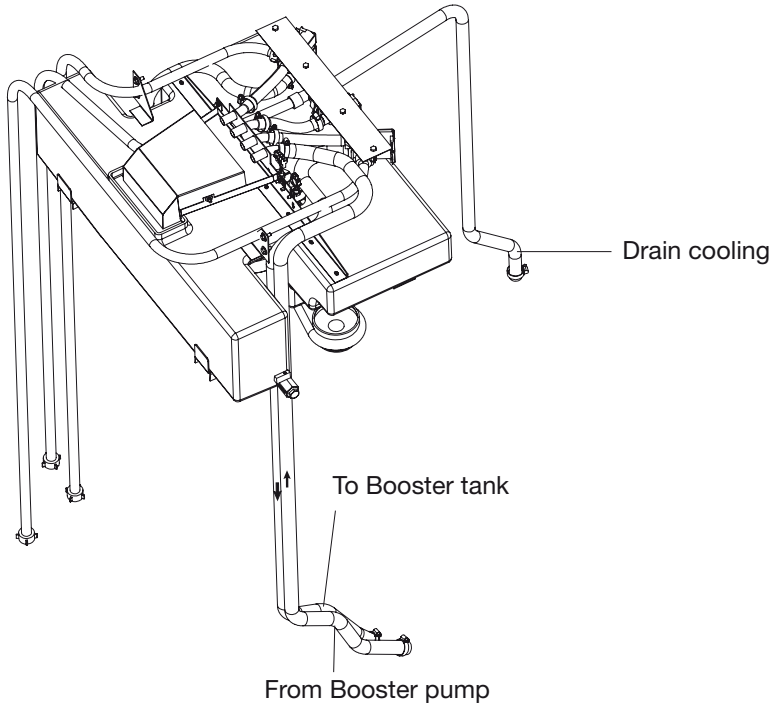

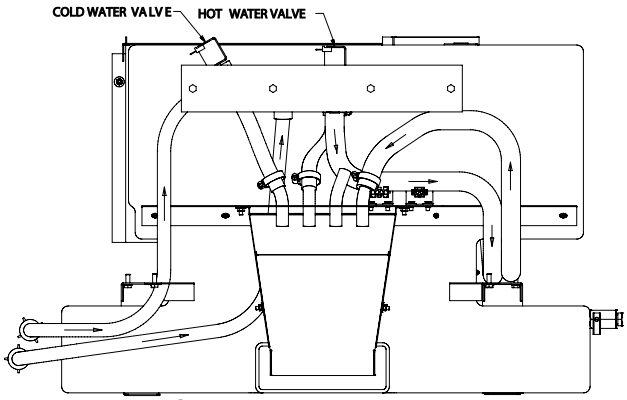

Cold water and hot water

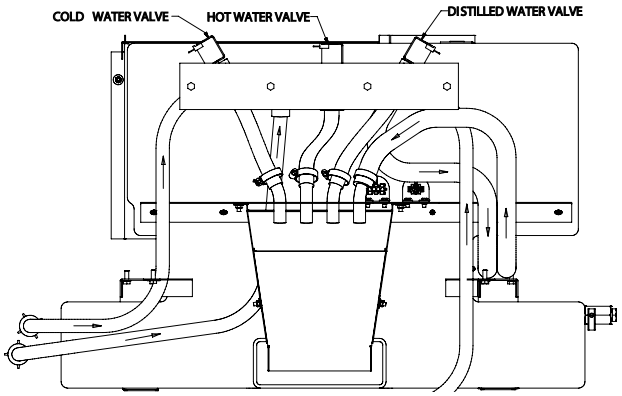

Cold water, hot water and distilled water

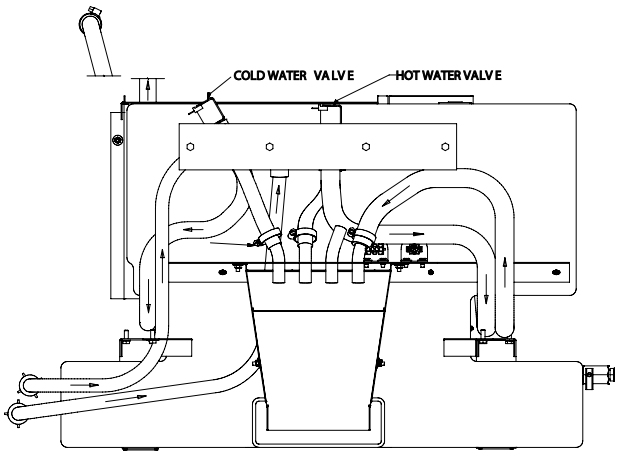

Cold water and hot water with drain cooling

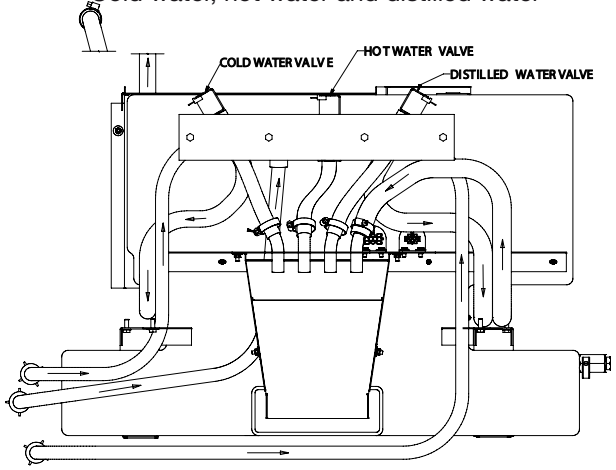

Cold water, hot water and distilled water with drain cooling

Downloaded from www.Manualslib.com manuals search engine

Drain valve

This may only be done by authorized personnel.

Before starting work, make sure that the machine is isolated from the electric power supply.

Before starting work, make sure that the booster tank, process tank and the waste tank are fully drained.

Hot surfaces and hot water

Checking

Check for leaks and visible damage. Check that there is no dirt or deposit on the diaphragm.

Adjusting (adjustment allowances)

Slacken the nut, hold back the copper washer and turn the bolt. Adjust the valve so that it closes tight.

Repair

Unscrew the four screws securing the motor and slacken the hose clips that retain the diaphragm.

Replacing the diaphragm

To access the diaphragm, it is necessary to remove the booster pump and motor mounting bracket. Remove the diaphragm hose clip from the clean side. Replace the diaphragm in the drain valve at five-year intervals.

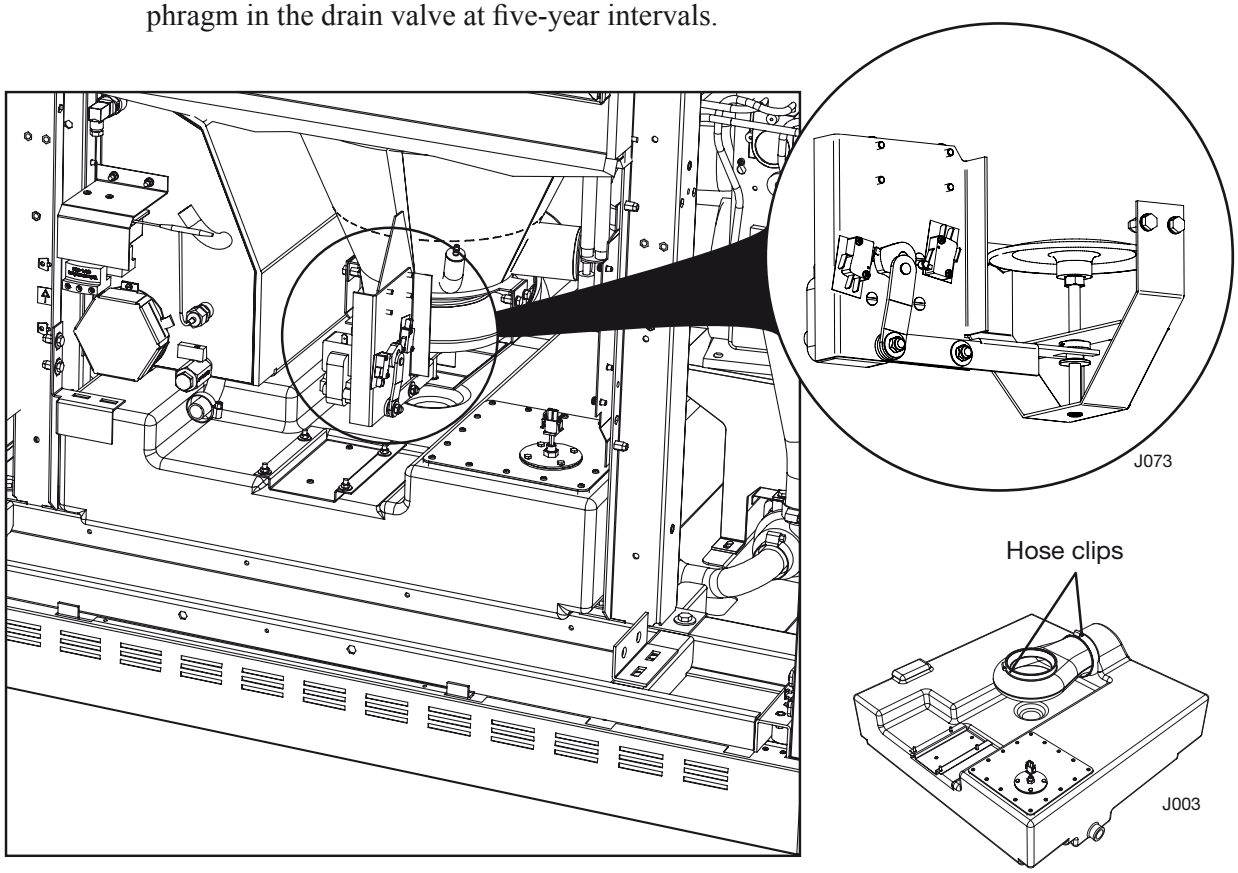

Downloaded from www.Manualslib.com manuals search engine

GETINGE

Waste tank

This may only be done by authorized personnel.

Before starting work, make sure that the machine is isolated from the electric power supply.

Before starting work, make sure that the booster tank, process tank and the waste tank are fully drained.

Hot surfaces and hot water

Replacing and adjusting sensors

To replace the sensor, release the metal plate around the sensor and lift out the sensor.

Manual cleaning

Release the plate where the sensor is mounted. Remove the plate with the sensor and clean with a brush.

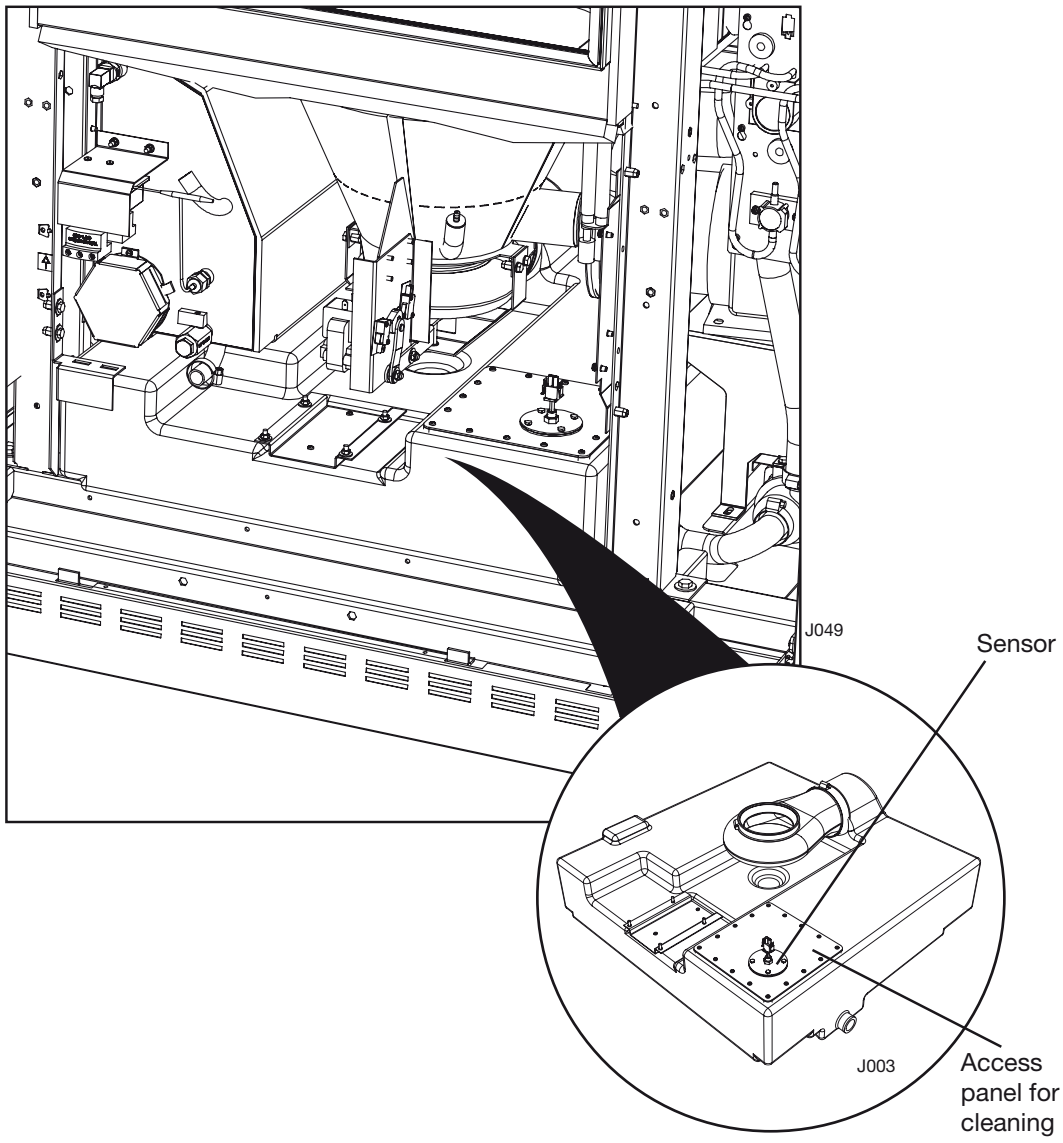

Downloaded from www.Manualslib.com manuals search engine

Waste pump

This may only be done by authorized personnel.

Before starting work, make sure that the machine is isolated from the electric power supply.

Before starting work, make sure that the booster tank, process tank and the waste tank are fully drained.

Hot surfaces and hot water

Checking

Check that there are no leaks from the pump or hoses.

Replacement

Empty the waste tank manually. It contains up to 55 litres. Release the hose clips and remove the pump from its mounting. Install a new pump and reconnect the hoses. Tighten the hose clips and check that there are no leaks from the pump or hoses.

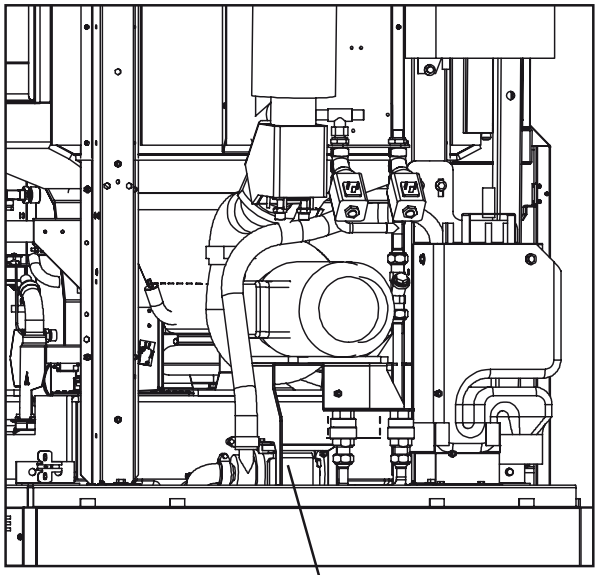

Downloaded from www.Manualslib.com manuals search engine

GETINGE

Water valves

This may only be done by authorized personnel.

Before starting work, make sure that the machine is isolated from the electric power supply.

Before starting work, make sure that the booster tank, process tank and the waste tank are fully drained.

Before starting work, make sure that the water is turned off and disconnected.

Hot parts

Replacing a filter

Remove the water valve from its mounting and disconnect the hose. In the hose connection there is a filter. To remove it, pull it straight out.

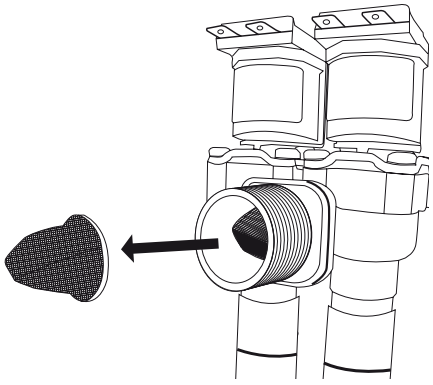

J026

Replacing the valve

Free the valve and its connections from its mounting and replace it.

Downloaded from www.Manualslib.com manuals search engine

Steam valves and condensation traps

This may only be done by authorized personnel.

Before starting work, make sure that the machine is isolated from the electric power supply. Before starting work, make sure that the booster tank, process tank and the waste tank are fully drained.
Make sure that the water and steam supplies are shut off and disconnected before work begins.

Hot parts

Replacing and cleaning filters

Unscrew the filter from its position. Pull out the filter and clean or replace it.

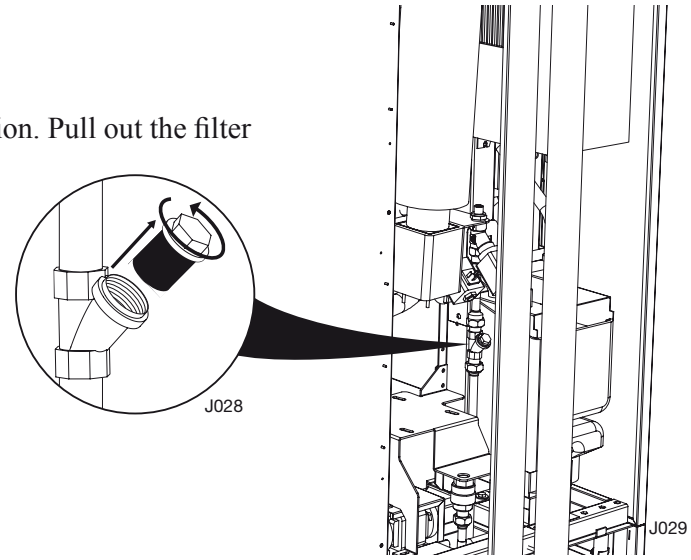

Replacing a steam hose

The steam hose must be replaced at five-yearly intervals. Unscrew the hose clips and disconnect the hose from the taper coupling. Install the new hose in the same position as the old one. Connect the hose to the couplings and tighten the hose clips. Check for leaks.

Downloaded from www.Manualslib.com manuals search engine

GETINGE

Detergent cabinet

The shelves in the detergent compartment can be moved by unhooking them and pulling them out. The middle shelf is fixed.

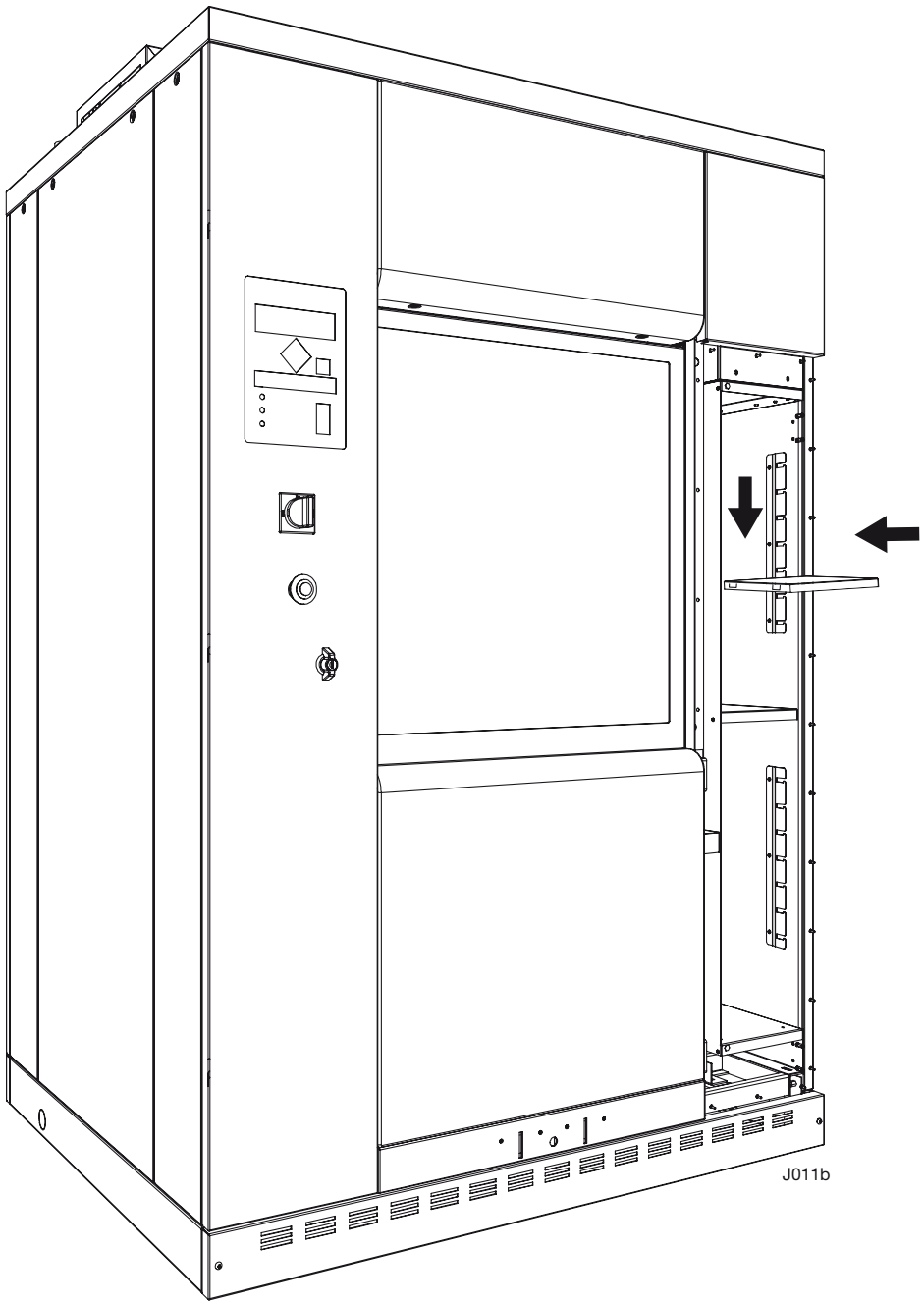

<Doc_TEC><Doc_502406700><Rel_B><Lang_GB>

Downloaded from www.Manualslib.com manuals search engine

Dosing pump and flow transmitter

This may only be done by authorized personnel.

Before starting work, make sure that the machine is isolated from the electric power supply.

Before starting work, make sure that the booster tank, process tank and the waste tank are fully drained.

Take care, as there may still be corrosive agents in the dosing pumps.

Replacing a dosing pump

Unscrew the plate holding the dosing pumps and the flow transmitters. Feed out the hoses so that the plate can be taken out of the detergent compartment. Separate the dosing pump so that it can be taken off the plate. Install the new flowmeter in the reverse order. When the replacement flowmeter has been installed, check for leaks at the hoses.

Replacing a flow transmitter

Unscrew the plate holding the dosing pumps and the flow transmitters. Feed out the hoses so that the plate can be taken out of the detergent compartment. Remove the defective flow transmitter. Install the new flow transmitter in the reverse order. When the replacement flow transmitter has been installed, check for leaks at the hoses.

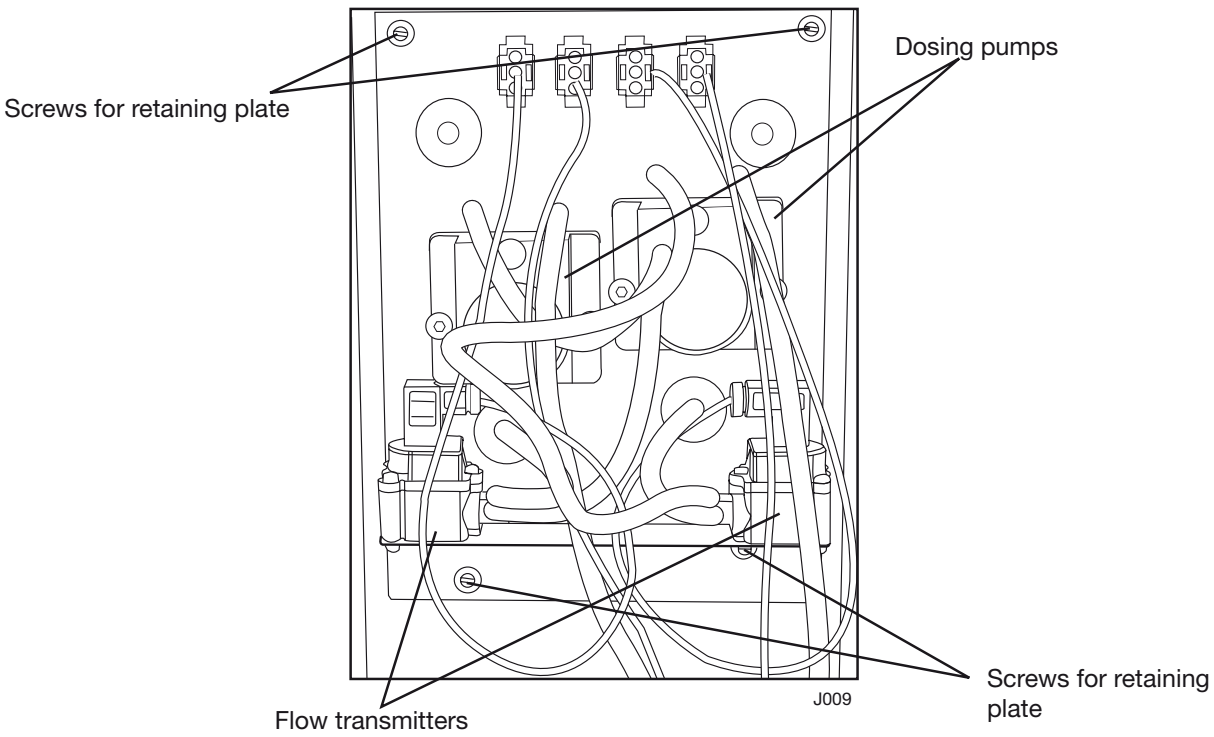

Downloaded from www.Manualslib.com manuals search engine

GETINGE

Replacing a pressure sensor

This may only be done by authorized personnel.

Before starting work, make sure that the machine is isolated from the electric power supply.

Before starting work, make sure that the booster tank, process tank and the waste tank are fully drained.

Unscrew the screws that secure the sensor and disconnect the wiring. Install the new sensor and re-connect the wiring as on the old sensor. After installation, check for leaks at the hoses.

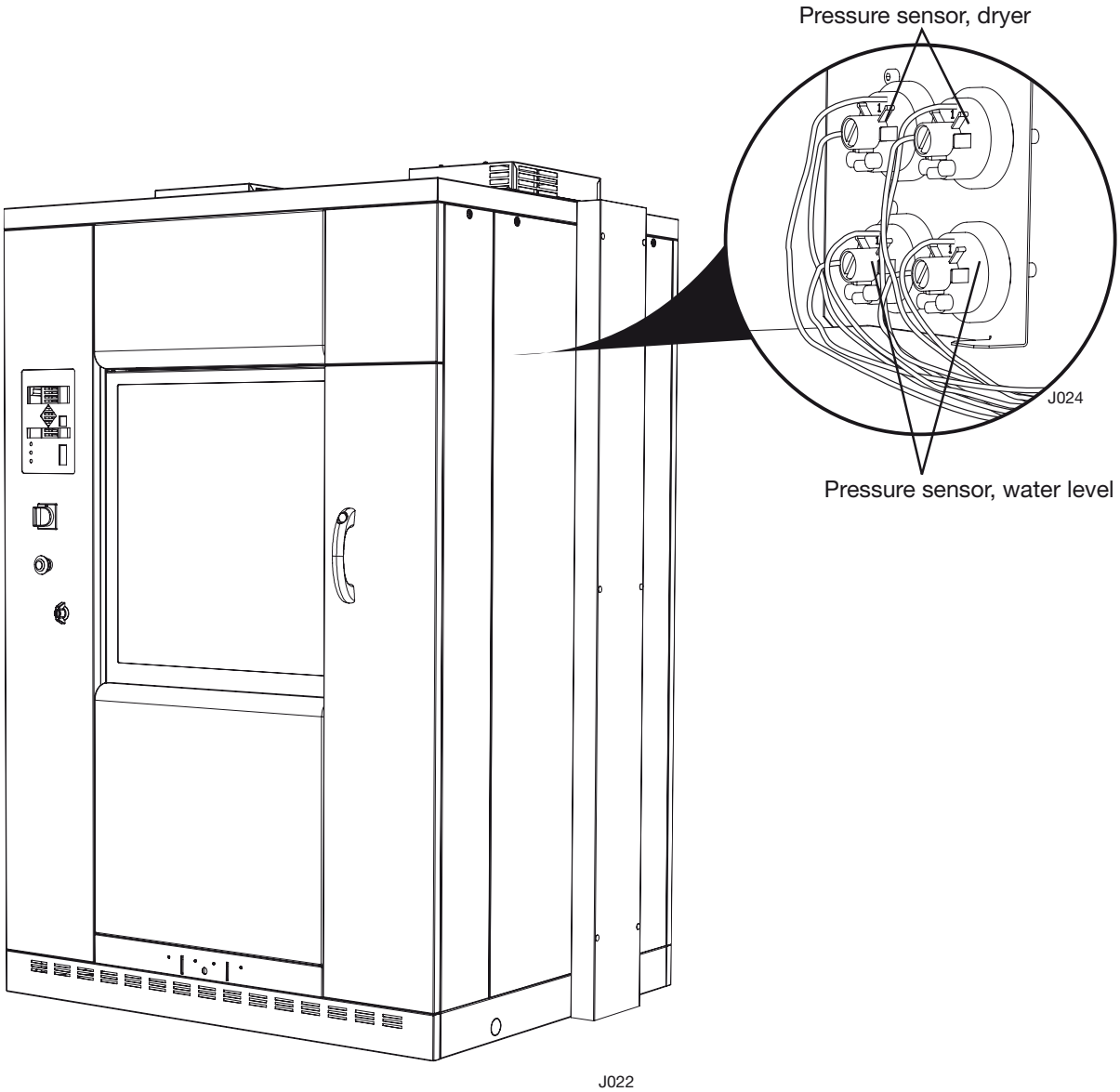

Downloaded from www.Manualslib.com manuals search engine

Replacing the differential pressure sensor

This may only be done by authorized personnel.

Before starting work, make sure that the machine is isolated from the electric power supply.

Before starting work, make sure that the booster tank, process tank and the waste tank are fully drained.

Unscrew the screws that secure the sensor and disconnect the wiring. Install the new sensor and re-connect the wiring as on the old sensor. Check the calibration.

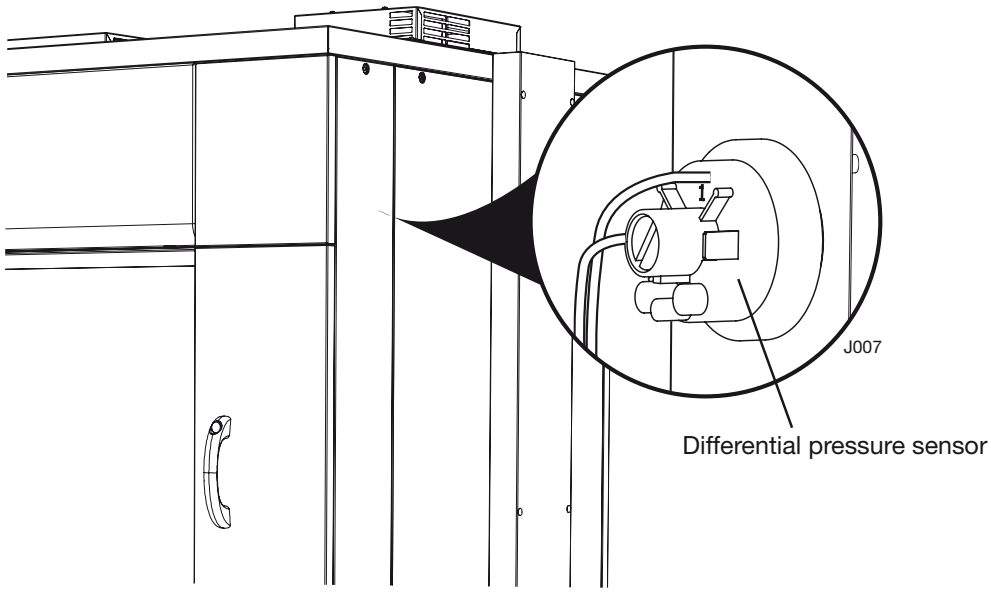

J022

Downloaded from www.Manualslib.com manuals search engine

GETINGE

Frequency converter

Replacement

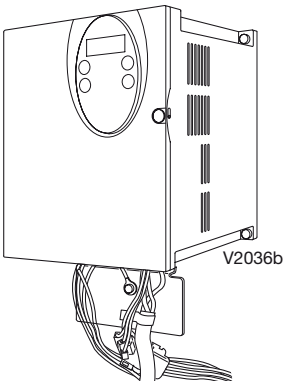

This may only be done by authorized personnel. Before starting work, make sure that the machine is isolated from the electric power supply.

Wait at least 15 minutes before starting work.

The frequency converter is located behind the electrical cabinet on the clean side of the machine.

- Remove the cover plate with the OP-panel on the clean side.
- Disconnect the supply cables to the frequency converter. The cables are connected to interference suppression filter Z04.
- Separate the control cable connector marked U04-X2.
- Disconnect the motor cable from the frequency converter and remove the clamp that secures the motor cable to the EMC plate of the frequency converter.
- Unscrew the fixing screws (four) and remove the frequency converter.
- Install the new frequency converter in the reverse order and configure it.
- Check the direction of rotation of the circulation pump. If it is wrong, switch off the power and change the phase sequence. **NOTE: This must be done on the motor cable.**

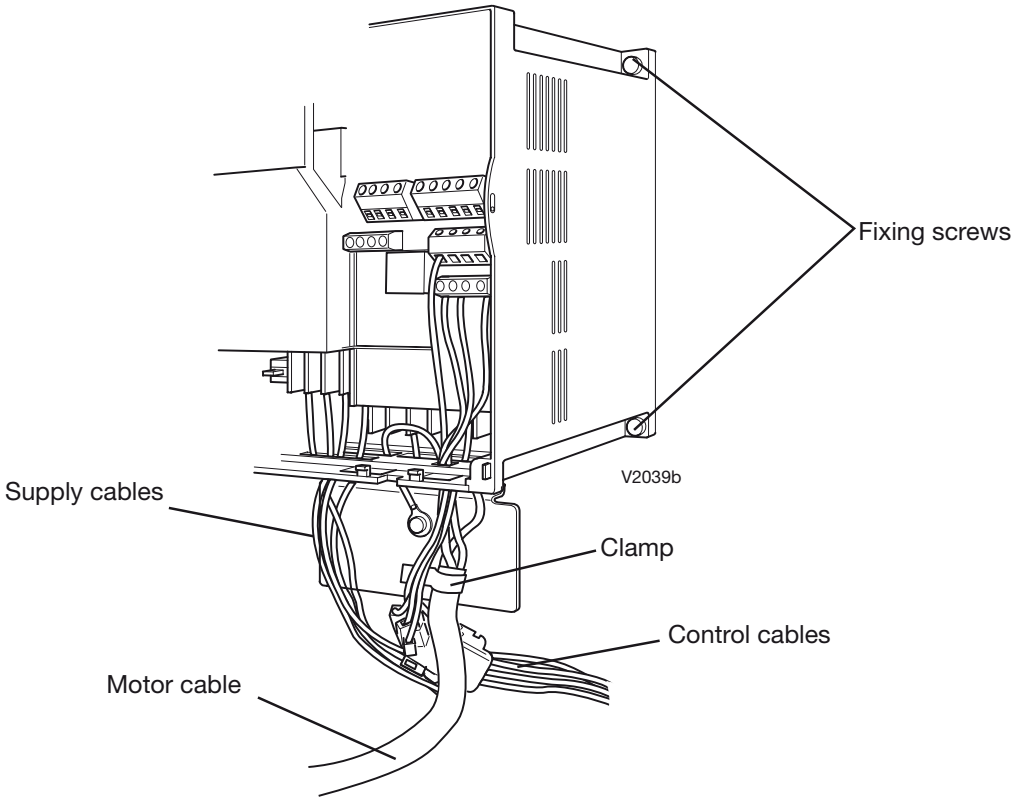

Downloaded from www.Manualslib.com manuals search engine

Configuration

The frequency converter is programmed via a cable with RJ45 connectors at both ends (a patch cable).

Connect the cable to the frequency converter as shown below. Connect the other end of the cable via an adapter to the COM port (RS232) of a PC.

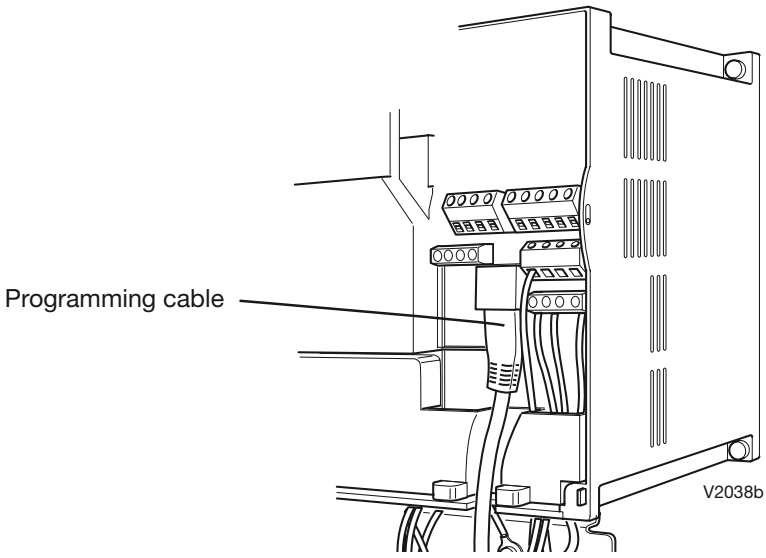

The frequency converter is programmed via the PowerSuitePC software or via the frequency converter panel.

Before programming starts, the machine must be powered on for communication between PC and frequency converter to work.

Then set the values for the various parameters as listed in the table below.
See the rows with a grey shaded background.

380-415VAC

Code	Label	Value	Default Value	Address
ACC	Acceleration ramp time	5.0 s	3.0 s	9001
ADC	Automatic DC injection	Yes: DC inj. for adj. time	Yes: DC inj. for adj. time	10401
ADCO	Drive CANopen address	0	0	6051
AI1A	Configuration of AI1	Configuration reference 1	Configuration reference 1	4821
AI2A	Configuration of AI2	Summing input 2	Summing input 2	4822
AI3A	Configuration of AI3	Not configured	Not configured	4823
AO1T	Configuration of AO1	Configuration 0-20 mA	Configuration 0-20 mA	4601
ATR	Automatic restart	No	No	7122
BDCO	CANopen trans. speed	125 kbit/s	125 kbit/s	6053
BFR	Std. motor frequency	50 Hz	50 Hz	3015
BLC	Brake control	Not assigned	Not assigned	10001
BRA	Decel ramp adaptation	Yes	Yes	9003
CHP	Switching, motor 2	Not assigned	Not assigned	8011

Downloaded from www.Manualslib.com manuals search engine

CLI	Internal current limit	4.9 A	8.2 A	9201
COL	Stop for CANopen flt.COF	Freewheel	Freewheel	7011
COS	Motor power factor	0.80	0.81	9606
CRH3	Value for high speed AI3	20.0 mA	20.0 mA	4444
CRL3	Value for low speed AI3	4.0 mA	4.0 mA	4434
CTD	Motor current detection	4.9 A	5.5 A	11001
DCI	DC brake via logic input	Not assigned	Not assigned	11203
DEC	Deceleration ramp time	5.0 s	3.0 s	9002
DO	AOC/AOV assignment	Not assigned	Not assigned	5031
DRN	Derating for undervoltage	No	No	7007
EPL	Stop mode at external flt.	Freewheel	Freewheel	7006
ERCO	Error registry CANopen	0	0	6056
ETF	External fault	Not assigned	Not assigned	7131
FLG	Frequency loop gain	20 %	20 %	9620
FLO	Forced local mode	Not assigned	Not assigned	8431
FLR	Catch on fly	No	No	3110
FR1	Configuration reference 1	Analog input AI1	Analog input AI1	8413
FR2	Configuration reference 2	Not configured	Not configured	8414
FRS	Nominal motor frequency	50.0 Hz	50.0 Hz	9602
FRT	Ramp 2 switch frequency	0.0 Hz	0.0 Hz	9011
FST	Fast stop	Not assigned	Not assigned	11204
FTD	Motor freq threshold	50.0 Hz	50.0 Hz	11003
HSP	High Speed	50.0 Hz	50.0 Hz	3104
INH	Fault inhibit	Not assigned	Not assigned	7125
IPL	Loss of input phase	Yes	Yes	7002
ITH	Motor thermal Current	4.9 A	5.5 A	9622
JF2	Skip frequency 2	0.0 Hz	0.0 Hz	11302
JOG	Jog operation	Not assigned	Not assigned	11110
JPF	Skip frequency	0.0 Hz	0.0 Hz	11301
LAC	Function access level	Access to std. functions	Access to std. functions	3006
LAF	Limit forward direction	Not assigned	Not assigned	11601
LAR	Limit reverse direction	Not assigned	Not assigned	11602
LC2	Eneble current limit 2	Not assigned	Not assigned	9202
LCC	Remote terminal control	No	No	64003
LFF	Fall back speed	10.0 Hz	10.0 Hz	7080
LFL	Stop mode at loss 4-20 mA	Fault ignored	Fault ignored	7003
LI1A	Config. logic input 1	Forward	Forward	4801
LI2A	Config. logic input 2	Reverse	Reverse	4802
LI3A	Config. logic input 3	Select 2 preset speeds	Select 2 preset speeds	4803
LI4A	Config. logic input 4	Select 4 preset speeds	Select 4 preset speeds	4804
LI5A	Config. logic input 5	Not configured	Not configured	4805
LI6A	Config. logic input 6	Not configured	Not configured	4806
LSP	Low Speed	0.0 Hz	0.0 Hz	3105
NCR	Nominal motor current	4.9 A	5.1 A	9603
NRD	Motor Noise Reduction	Yes	Yes	3107
NSP	Nominal motor speed	2840 rpm	1430 rpm	9604

Downloaded from www.Manualslib.com manuals search engine

NST	Freewheel stop	Not assigned	Not assigned	11202
OHL	Stop mode at drive oheat	Freewheel	Freewheel	7008
OLL	Stop mode at motor oheat	Freewheel	Freewheel	7009
OPL	Output Phase Loss	OPF fault	OPF fault	9611
PIF	PI regulator feedback	Not configured	Not configured	11901
PS16	Enable 16 preset speeds	Not assigned	Not assigned	11404
PS2	Enable 2 preset speeds	Logic input LI3	Logic input LI3	11401
PS4	Enable 4 preset speeds	Logic input LI4	Logic input LI4	11402
PS8	Enable 8 preset speeds	Not assigned	Not assigned	11403
PST	STOP Key Priority	Yes	Yes	64002
R1	Relay R1	Drive fault	Drive fault	5001
R2	Relay R2	Not assigned	Not assigned	5002
RFC	Enable switching refs.	Configuration reference 1	Configuration reference 1	8411
RPS	Ramp switching	Not assigned	Not assigned	9010
RPT	Type of ramp	Linear ramp	Linear ramp	9004
RRS	Reverse	Logic input LI2	Logic input LI2	11105
RSC	Cold stator resistance	Inactiv.	Inactiv.	9643
RSF	Fault reset	Not assigned	Not assigned	7124
SA2	Summing input 2	Analog input AI2	Analog input AI2	11801
SA3	Summing input 2	Not configured	Not configured	11802
SDC1	DC current at standstill	3.8 A	3.8 A	10403
SDC2	DC current at standstill 2	2.7 A	2.4 A	10405
SDS	Display scale factor	30.0	30.0	12001
SFR	Drive switching frequency	9.0 kHz	4.0 kHz	3102
SLL	Stop mode at Modbus SLF	Freewheel	Freewheel	7010
SLP	Slip Compensation	100 %	100 %	9625
SP2	Preset speed 2	40.0 Hz	10.0 Hz	11410
SP3	Preset speed 3	50.0 Hz	15.0 Hz	11411
SP4	Preset speed 4	40.0 Hz	20.0 Hz	11412
SRF	Disable speed loop filter	No	No	9101
STA	Frequency loop stability	20 %	20 %	9621
STP	Ctrld stop on power loss	Lock drive freewheel stop	Lock drive freewheel stop	7004
STT	Normal stop mode	On ramp	On ramp	11201
TCC	2 wire or 3 wire control	2-wire control	2-wire control	11101
TCT	Type of 2 wire control	Edge triggered	Edge triggered	11102
TDC1	DC injection time	0.5 s	0.5 s	10402
TDC2	2nd DC injection time	0.0 s	0.0 s	10404
TFR	Max output frequency	60.0 Hz	60.0 Hz	3103
TLS	Low speed time out	0.0 s	0.0 s	11701
TNL	Auto-tuning fault config	Yes	Yes	7012
TTD	Motor thermal threshold	100 %	100 %	11002
TUN	Automatic tuning	Not assigned	Not assigned	9608
UFR	Voltage boost	20 %	20 %	9623
UFT	Select type of U/F ratio	Sensorless flux vector ctrl	Sensorless flux vector ctrl	9607
UNS	Nominal motor voltage	400 V	400 V	9601

<Doc_TEC><Doc_502406700><Rel_B><Lang_GB>

Downloaded from www.Manualslib.com manuals search engine

GETINGE

200-240VAC

Code	Label	Value	Defalut value	Address
ACC	Acceleration ramp time	5.0 s	3.0 s	9001
ADC	Automatic DC injection	Yes: DC inj. for adj. time	Yes: DC inj. for adj. time	10401
ADCO	Drive CANopen address	0	0	4051
AI1A	Configuration of AI1	Configuration reference 1	Configuration reference 1	4821
AI2A	Configuration of AI2	Summing input 2	Summing input 2	4822
AI3A	Configuration of AI3	Not configured	Not configured	4823
AO1T	Configuration of AO1	Configuration 0-20 mA	Configuration 0-20 mA	4601
ATR	Automatic restart	No	No	7122
BDCO	CANopen trans. speed	125 kbit/s	125 kbit/s	6053
BFR	Std. motor frequency	50 Hz	50 Hz	3015
BLC	Brake control	Not assigned	Not assigned	10001
BRA	Decel ramp adaptation	Yes	Yes	9003
CHP	Switching, motor 2	Not assigned	Not assigned	8011
CLI	Internal current limit	8.5 A	26.2 A	9201
COL	Stop for CANopen flt.COF	Freewheel	Freewheel	7011
COS	Motor power factor	0.80	0.79	9606
CRH3	Value for high speed AI3	20.0 mA	20.0 mA	4444
CRL3	Value for low speed AI3	4.0 mA	4.0 mA	4434
CTD	Motor current detection	8.5 A	17.5 A	11001
DCI	DC brake via logic input	Not assigned	Not assigned	11203
DEC	Deceleration ramp time	5.0 s	3.0 s	9002
DO	AOC/AOV assignment	Not assigned	Not assigned	5031
DRN	Derating for undervoltage	No	No	7007
EPL	Stop mode at external flt.	Freewheel	Freewheel	7006
ERCO	Error registry CANopen	0	0	6056
ETF	External fault	Not assigned	Not assigned	7131
FLG	Frequency loop gain	20 %	20 %	9620
FLO	Forced local mode	Not assigned	Not assigned	8431
FLR	Catch on fly	No	No	3110
FR1	Configuration reference 1	Analog input AI1	Analog input AI1	8413
FR2	Configuration reference 2	Not configured	Not configured	8414
FRS	Nominal motor frequency	50.0 Hz	50.0 Hz	9602
FRT	Ramp 2 switch frequency	0.0 Hz	0.0 Hz	9011
FST	Fast stop	Not assigned	Not assigned	11204
FTD	Motor freq threshold	50.0 Hz	50.0 Hz	11003
HSP	High Speed	50.0 Hz	50.0 Hz	3104
INH	Fault inhibit	Not assigned	Not assigned	7125
IPL	Loss of input phase	Yes	Yes	7002
ITH	Motor thermal Current	8.5 A	17.5 A	9622
JF2	Skip frequency 2	0.0 Hz	0.0 Hz	11302
JOG	Jog operation	Not assigned	Not assigned	11110
JPF	Skip frequency	0.0 Hz	0.0 Hz	11301
LAC	Function access level	Access to std. functions	Access to std. functions	3006

<Doc_TEC><Doc_502406700><Rel_B><Lang_GB>

Downloaded from www.Manualslib.com manuals search engine

LAF	Limit forward direction	Not assigned	Not assigned	11601
LAR	Limit reverse direction	Not assigned	Not assigned	11602
LC2	Eneble current limit 2	Not assigned	Not assigned	9202
LCC	Remote terminal control	No	No	64003
LFF	Fall back speed	10.0 Hz	10.0 Hz	7080
LFL	Stop mode at loss 4-20 mA	Fault ignored	Fault ignored	7003
LI1A	Config. logic input 1	Forward	Forward	4801
LI2A	Config. logic input 2	Reverse	Reverse	4802
LI3A	Config. logic input 3	Select 2 preset speeds	Select 2 preset speeds	4803
LI4A	Config. logic input 4	Select 4 preset speeds	Select 4 preset speeds	4804
LI5A	Config. logic input 5	Not configured	Not configured	4805
LI6A	Config. logic input 6	Not configured	Not configured	4806
LSP	Low Speed	0.0 Hz	0.0 Hz	3105
NCR	Nominal motor current	8.5 A	15.8 A	9603
NRD	Motor Noise Reduction	Yes	Yes	3107
NSP	Nominal motor speed	2840 rpm	1425 rpm	9604
NST	Freewheel stop	Not assigned	Not assigned	11202
OHL	Stop mode at drive oheat	Freewheel	Freewheel	7008
OLL	Stop mode at motor oheat	Freewheel	Freewheel	7009
OPL	Output Phase Loss	OPF fault	OPF fault	9611
PIF	PI regulator feedback	Not configured	Not configured	11901
PS16	Enable 16 preset speeds	Not assigned	Not assigned	11404
PS2	Enable 2 preset speeds	Logic input LI3	Logic input LI3	11401
PS4	Enable 4 preset speeds	Logic input LI4	Logic input LI4	11402
PS8	Enable 8 preset speeds	Not assigned	Not assigned	11403
PST	STOP Key Priority	Yes	Yes	64002
R1	Relay R1	Drive fault	Drive fault	5001
R2	Relay R2	Not assigned	Not assigned	5002
RFC	Enable switching refs.	Configuration reference 1	Configuration reference 1	8411
RPS	Ramp switching	Not assigned	Not assigned	9010
RPT	Type of ramp	Linear ramp	Linear ramp	9004
RRS	Reverse	Logic input LI2	Logic input LI2	11105
RSC	Cold stator resistance	Inactiv.	Inactiv.	9643
RSF	Fault reset	Not assigned	Not assigned	7124
SA2	Summing input 2	Analog input AI2	Analog input AI2	11801
SA3	Summing input 2	Not configured	Not configured	11802
SDC1	DC current at standstill	3.8 A	3.8 A	10403
SDC2	DC current at standstill 2	8.7 A	4.2 A	10405
SDS	Display scale factor	30.0	30.0	12001
SFR	Drive switching frequency	9.0 kHz	4.0 kHz	3102
SLL	Stop mode at Modbus SLF	Freewheel	Freewheel	7010
SLP	Slip Compensation	100 %	100 %	9625
SP2	Preset speed 2	40.0 Hz	10.0 Hz	11410
SP3	Preset speed 3	50.0 Hz	15.0 Hz	11411
SP4	Preset speed 4	40.0 Hz	20.0 Hz	11412
SRF	Disable speed loop filter	No	No	9101

<Doc_TEC><Doc_502406700><Rel_B><Lang_GB>

Downloaded from www.Manualslib.com manuals search engine

STA	Frequency loop stability	20 %	20 %	9621
STP	Ctrld stop on power loss	Lock drive freewheel stop	Lock drive freewheel stop	7004
STT	Normal stop mode	On ramp	On ramp	11201
TCC	2 wire or 3 wire control	2-wire control	2-wire control	11101
TCT	Type of 2 wire control	Edge triggered	Edge triggered	11102
TDC1	DC injection time	0.5 s	0.5 s	10402
TDC2	2nd DC injection time	0.0 s	0.0 s	10404
TFR	Max output frequency	60.0 Hz	60.0 Hz	3103
TLS	Low speed time out	0.0 s	0.0 s	11701
TNL	Auto-tuning fault config	Yes	Yes	7012
TTD	Motor thermal threshold	100 %	100 %	11002
TUN	Automatic tuning	Not assigned	Not assigned	9608
UFR	Voltage boost	20 %	20 %	9623
UFT	Select type of U/F ratio	Sensorless flux vector ctrl	Sensorless flux vector ctrl	9607
UNS	Nominal motor voltage	400 V	400 V	9601

<Doc_TEC><Doc_502406700><Rel_B><Lang_GB>

Downloaded from www.Manualslib.com manuals search engine

Electrical diagrams

Electrically heated

Standard, 380-415 VAC

Supervisor, 380-415 VAC

Steam heated

Standard, 380-415 VAC

Standard, 230-240 VAC

Standard, 200-208 VAC

Supervisor, 380-415 VAC

Downloaded from www.Manualslib.com manuals search engine

Downloaded from www.Manualslib.com manuals search engine

THIS DRAWING CONTAINS CONFIDENTIAL INFORMATION AND REMAINS THE PROPERTY OF GETINGE DISINFECTION AB WITHOUT WHOSE PERMISSION IT MAY NOT BE COPIED, SHOWN OR HANDED TO A THIRD PART OR USED AT THE BASIS OF ALTERNATE DESIGNS

CONTENTS OF DRAWINGS

SHEET	DESCRIPTION	REVISION	NOTE	SHEET	DESCRIPTION	REVISION	NOTE
2	ELECTRICAL CABINET LEFT SIDE	A	380-415V, 50-60Hz, 3+N+PE	54	CABLE, HANDSCANNER	A	
3	POWER SUPPLY, MAIN CIRCUITS	A		101	PROTECTIVE BONDING CIRCUIT	A	
4	MAIN CIRCUITS	A					
5	CONTROL VOLTAGE, 230VAC	A					
6	CONTROL VOLTAGE, 24VDC	A					
7	CONTROL VOLTAGE, 5VDC	A					
8	CONTROL SYSTEM, PACS300	A					
9	MAIN BOARD, AI00-AI07	A					
10	MAIN BOARD, DI00-DI07	A					
11	MAIN BOARD, DI08-DI15	A					
12	MAIN BOARD, DO00-DO08	A					
13	MAIN BOARD, DO09-DO17	A					
14	EXPANSION CARD #1, DI16-DI21	A					
15	EXPANSION CARD #1, DO18-DO25, AO01	A					
16	EXPANSION CARD #2, DI22-DI27	A					
17	EXPANSION CARD #2, DO26-DO33, AO02	A					
18	EXPANSION CARD #3, DI28-DI33	A					
19	EXPANSION CARD #3, DO34-DO41, AO03	A					
20	EXPANSION CARD #4, DI34-DI39	A					
21	EXPANSION CARD #4, DO42-DO49, AO04	A					
22	HARDWARE INTERLOCKS	A					
23	AGS SIGNALS	A					
24	DOSING PUMPS	A					
51	CABLES, PANEL CS AND SS	A					
52	CABLES, PRINTER	A					
53	CABLES, AUTOSCANNER	A					

DRAWN BY	CHECKED BY (GETINGE)	APPROVAL (GETINGE)	DATE (APP.)	PROJECT NUMBER
MHn	JSn	JSn	2006-01-02	

GETINGE
GETINGE DISINFECTION
P.O. BOX 1505
SE 352 15 VAXJO
SWEDEN

UTENSIL WASHER TYPE 88-5 EL
CIRCUIT DIAGRAM
CONTENTS OF DRAWINGS

DRAWING NUMBER	SHEET
5027555	1
DATE / REV.	NEXT SHEET
2005-05-16 / A	2

REV:	NOTE:	SIGN.	DATE:
A	PU06-0122	HS	070816

Downloaded from www.Manualslib.com manuals search engine

THIS DRAWING CONTAINS CONFIDENTIAL INFORMATION AND REMAINS THE PROPERTY OF GETINGE DISINFECTION AB WITHOUT WHOSE PERMISSION IT MAY NOT BE COPIED, SHOWN OR HANDED TO A THIRD PART OR USED AT THE BASIS OF ALTERNATE DESIGNS

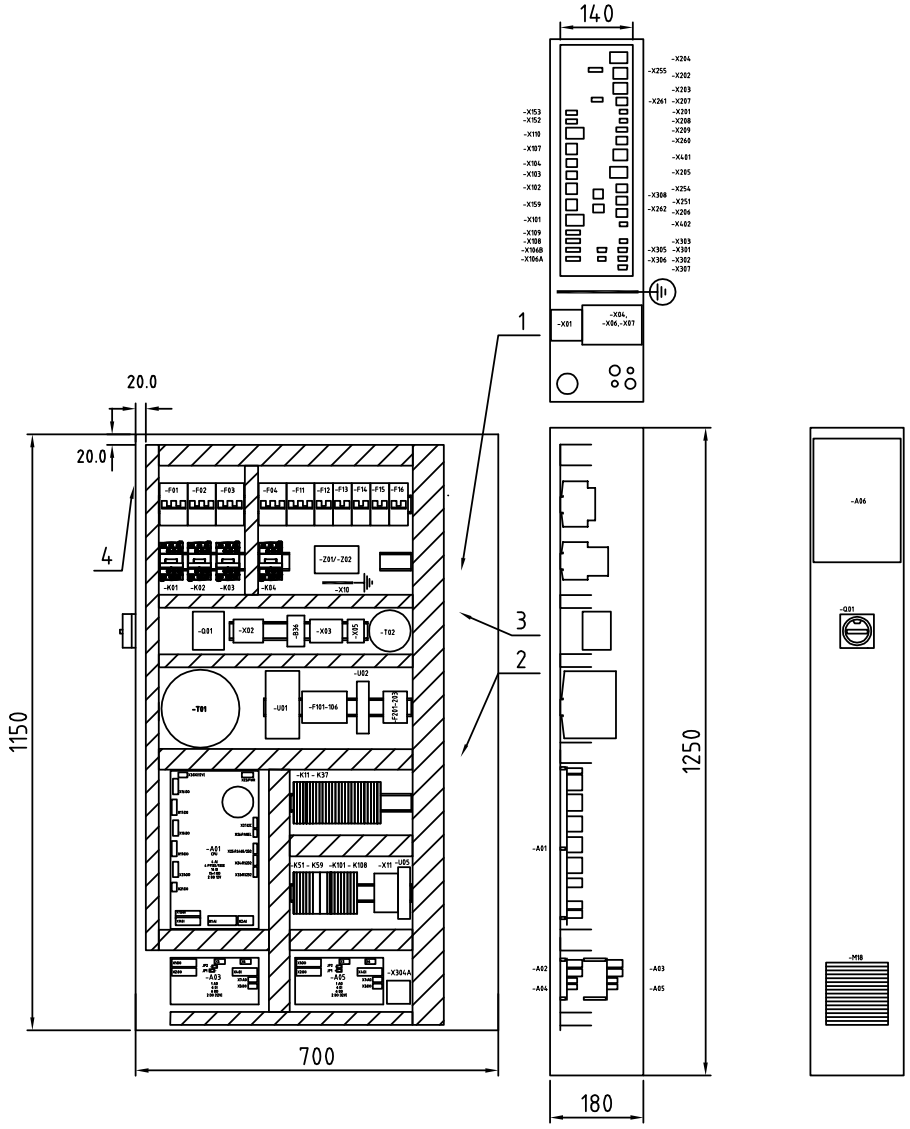

FOLLOWING COMPONENTS ARE OPTIONS:

-T01
-U02
-U05

WIRES USED IN MACHINE:

ACCORDING TO UL STYLE 1015, 600V 105C.
IF OTHER TYPE OF WIRE IS USED THIS IS SPECIFIED IN THE WIRING DIAGRAMS.

1) Connection point for power circuit.

2) Connection point for control voltage.

3) Label with fuse terminal description (5024156-00).

4) Label with manufacturers approval of electrical cabinet.

DRAWN BY	CHECKED BY (GETINGE)	APPROVAL (GETINGE)	DATE (APP.)	PROJECT NUMBER
MHn	JSn	JSn	2006-01-02	

GETINGE
GETINGE DISINFECTION
P.O. BOX 1505
SE 352 15 VAXJO
SWEDEN

UTENSIL WASHER TYPE 88-5 EL
ELECTRICAL CABINET LEFT SIDE
ELECTRICAL HEATED

DRAWING NUMBER		SHEET
5027555		2
DATE	REV.	NEXT SHEET
2005-05-16	A	3

REV:	NOTE:	SIGN.	DATE:
A	PU06-0122	HS	070816

Downloaded from www.Manualslib.com manuals search engine

THIS DRAWING CONTAINS CONFIDENTIAL INFORMATION AND REMAINS THE PROPERTY OF GETINGE DISINFECTION AB WITHOUT WHOSE PERMISSION IT MAY NOT BE COPIED, SHOWN OR HANDED TO A THIRD PART OR USED AT THE BASIS OF ALTERNATE DESIGNS

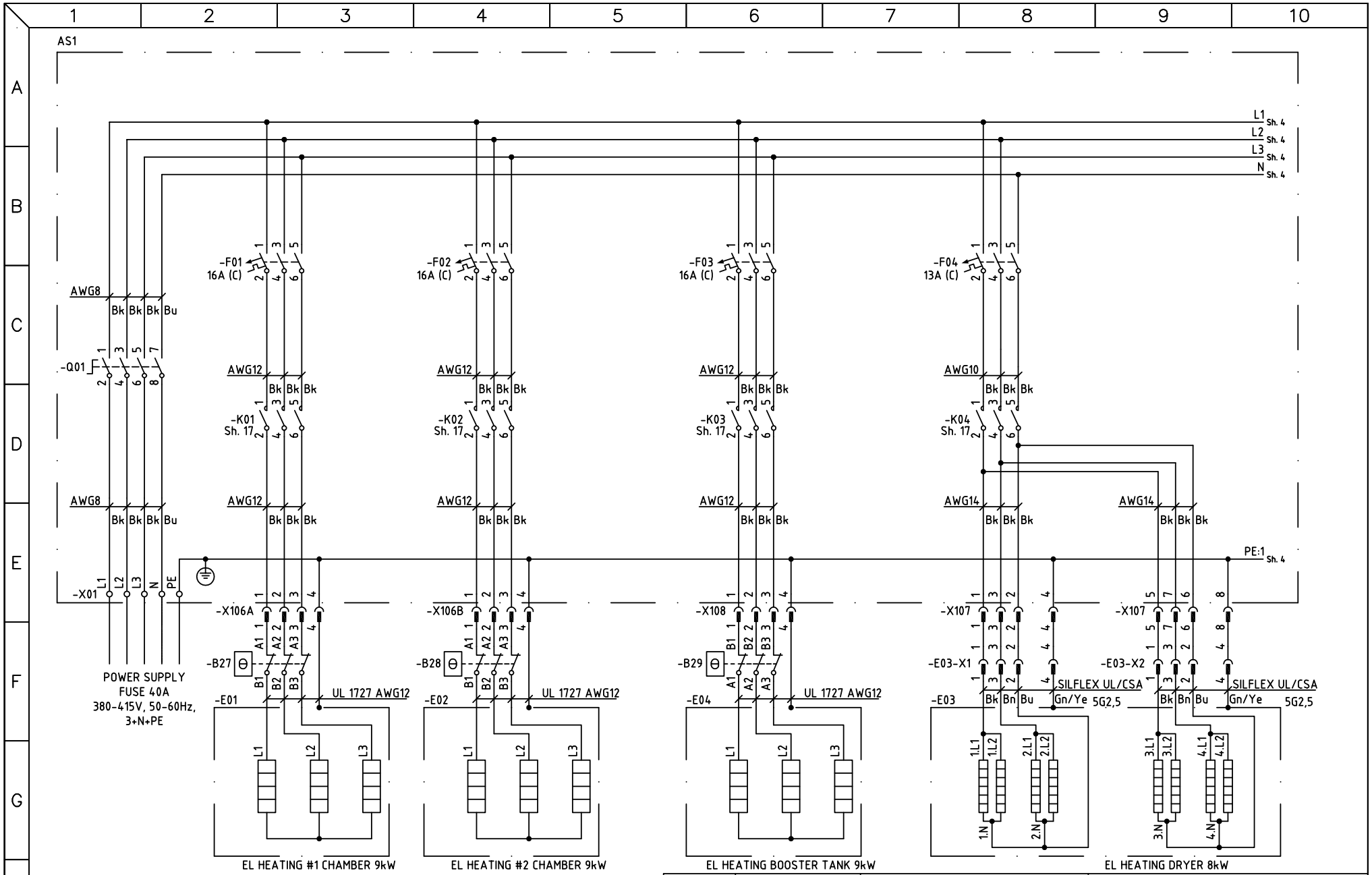

DRAWN BY	CHECKED BY (GETINGE)	APPROVAL (GETINGE)	DATE (APP.)	PROJECT NUMBER
MHn	JSn	JSn	2006-01-02	

GETINGE
GETINGE DISINFECTION
P.O. BOX 1505
SE 352 15 VAXJO
SWEDEN

UTENSIL WASHER TYPE 88-5 EL
CIRCUIT DIAGRAM
MAIN CIRCUIT

DRAWING NUMBER	SHEET
5027555	3
DATE / REV.	NEXT SHEET
2005-05-16 / A	4

REV:	NOTE:	SIGN.	DATE:
A	PU06-0122	HS	070816

Downloaded from www.Manualslib.com manuals search engine

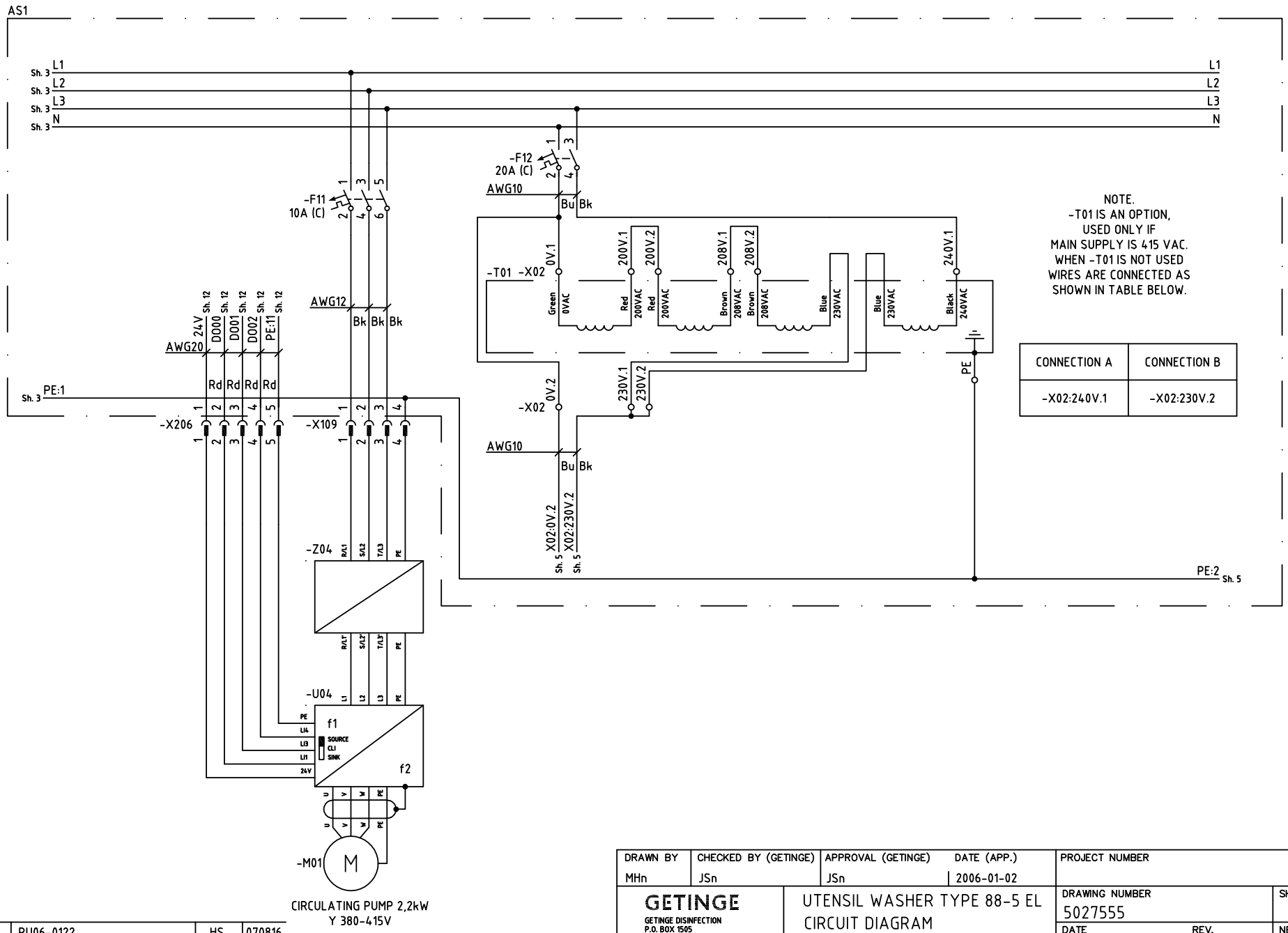

A	PU06-0122	HS	070816
REV:	NOTE:	SIGN.	DATE:

DRAWN BY	CHECKED BY (GETINGE)	APPROVAL (GETINGE)	DATE (APP.)	PROJECT NUMBER
MHn	JSn	JSn	2006-01-02	

GETINGE
GETINGE DISINFECTION
P.O. BOX 1505
SE 352 15 VAXJO
SWEDEN

UTENSIL WASHER TYPE 88-5 EL
CIRCUIT DIAGRAM
MAIN CIRCUIT

DRAWING NUMBER	SHEET
5027555	4
DATE / REV.	NEXT SHEET
2005-05-16 / A	5

Downloaded from www.Manualslib.com manuals search engine

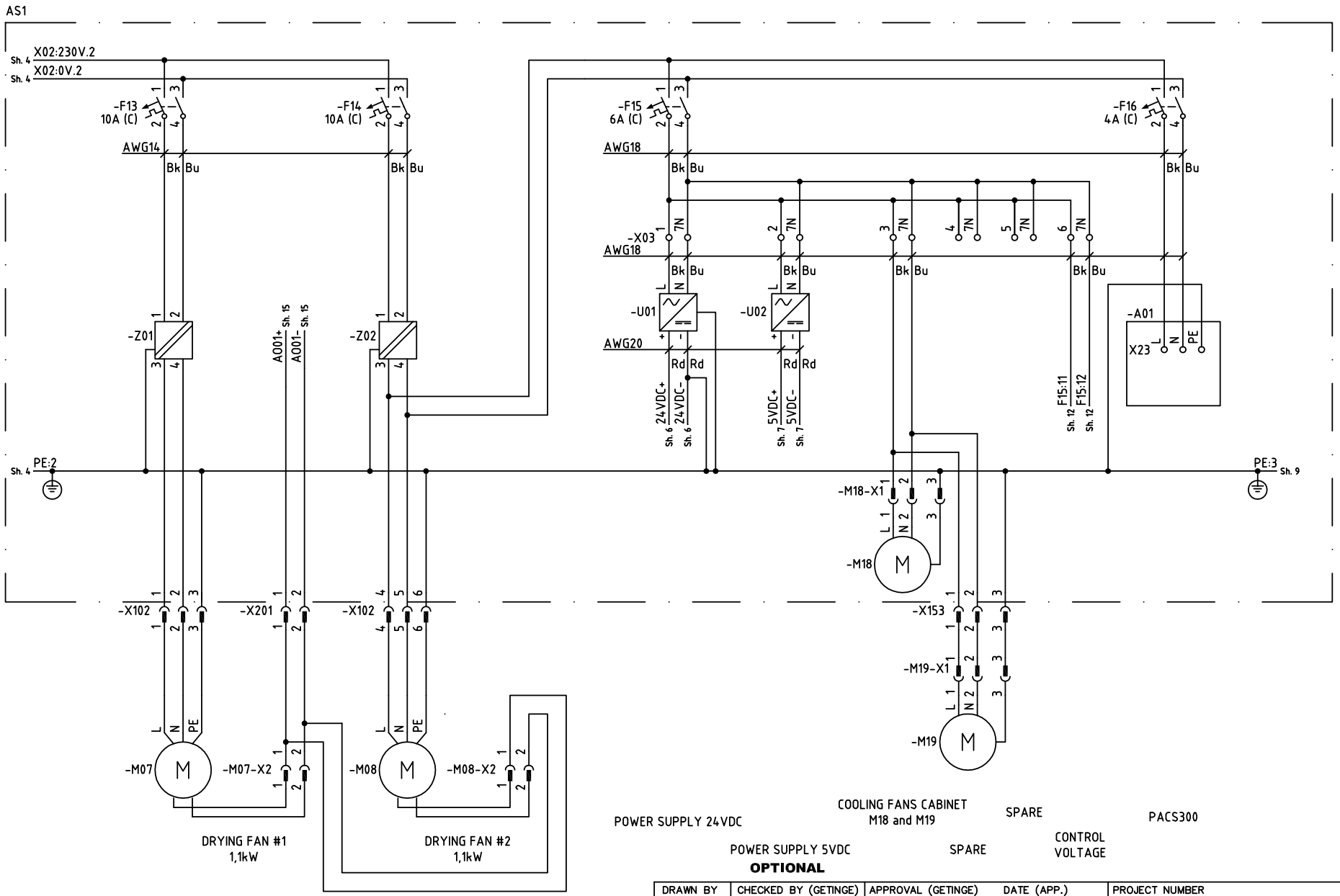

DRAWN BY	CHECKED BY (GETINGE)	APPROVAL (GETINGE)	DATE (APP.)	PROJECT NUMBER
MHn	JSn	JSn	2006-01-02	

GETINGE
GETINGE DISINFECTION
P.O. BOX 1505
SE 352 15 VAXJO
SWEDEN

UTENSIL WASHER TYPE 88-5 EL
CIRCUIT DIAGRAM
230VAC

DRAWING NUMBER	SHEET
5027555	5
DATE / REV.	NEXT SHEET
2005-05-16 / A	6

REV:	NOTE:	SIGN.	DATE:
A	PU06-0122	HS	070816

Downloaded from www.Manualslib.com manuals search engine

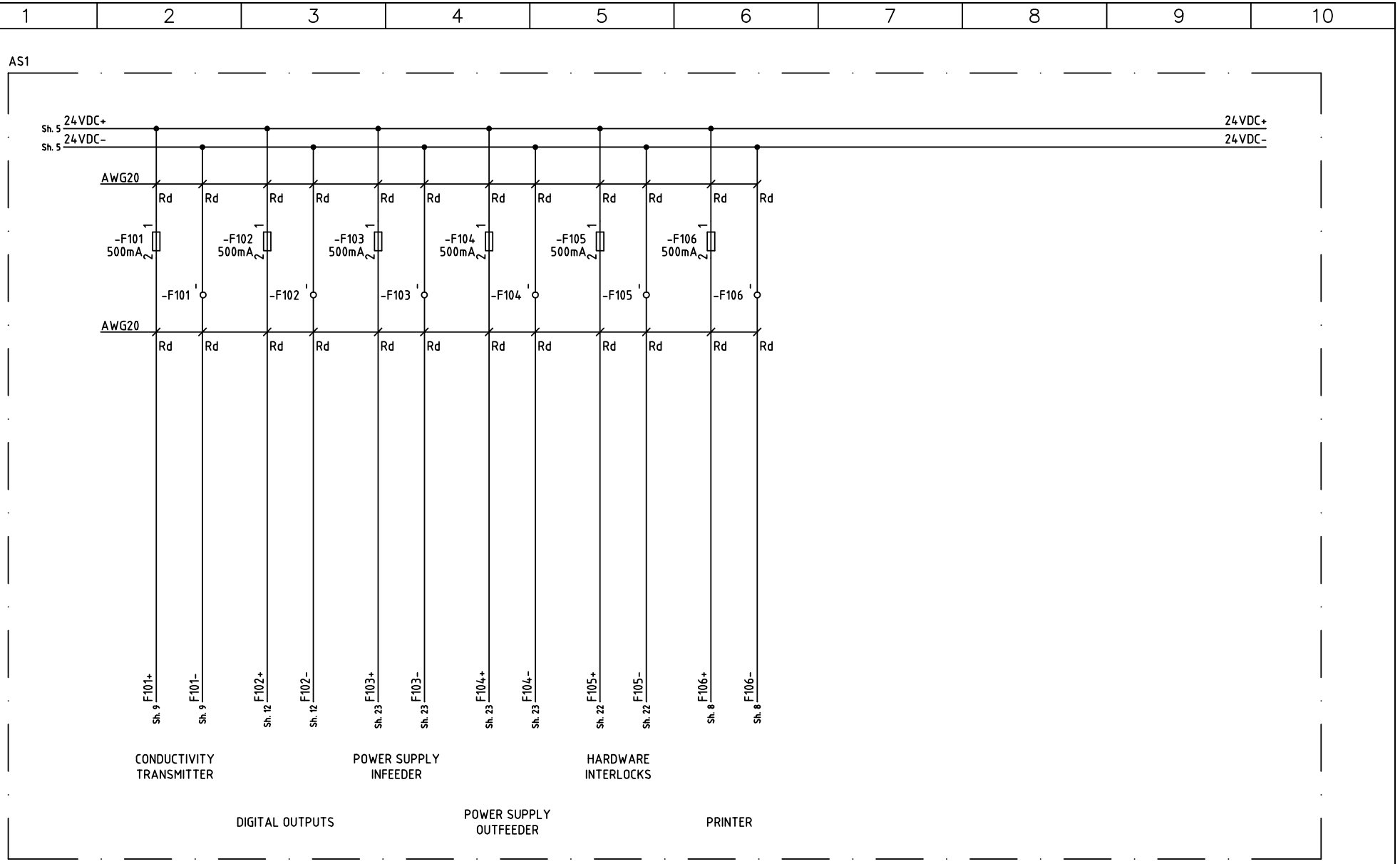

DRAWN BY	CHECKED BY (GETINGE)	APPROVAL (GETINGE)	DATE (APP.)	PROJECT NUMBER
MHn	JSn	JSn	2006-01-02	

GETINGE
GETINGE DISINFECTION
P.O. BOX 1505
SE 352 15 VAXJO
SWEDEN

UTENSIL WASHER TYPE 88-5 EL
CIRCUIT DIAGRAM
24VDC

DRAWING NUMBER	SHEET
5027555	6
DATE / REV.	NEXT SHEET
2005-05-16 / A	7

A	PU06-0122	HS	070816
REV:	NOTE:	SIGN.	DATE:

Downloaded from www.Manualslib.com manuals search engine

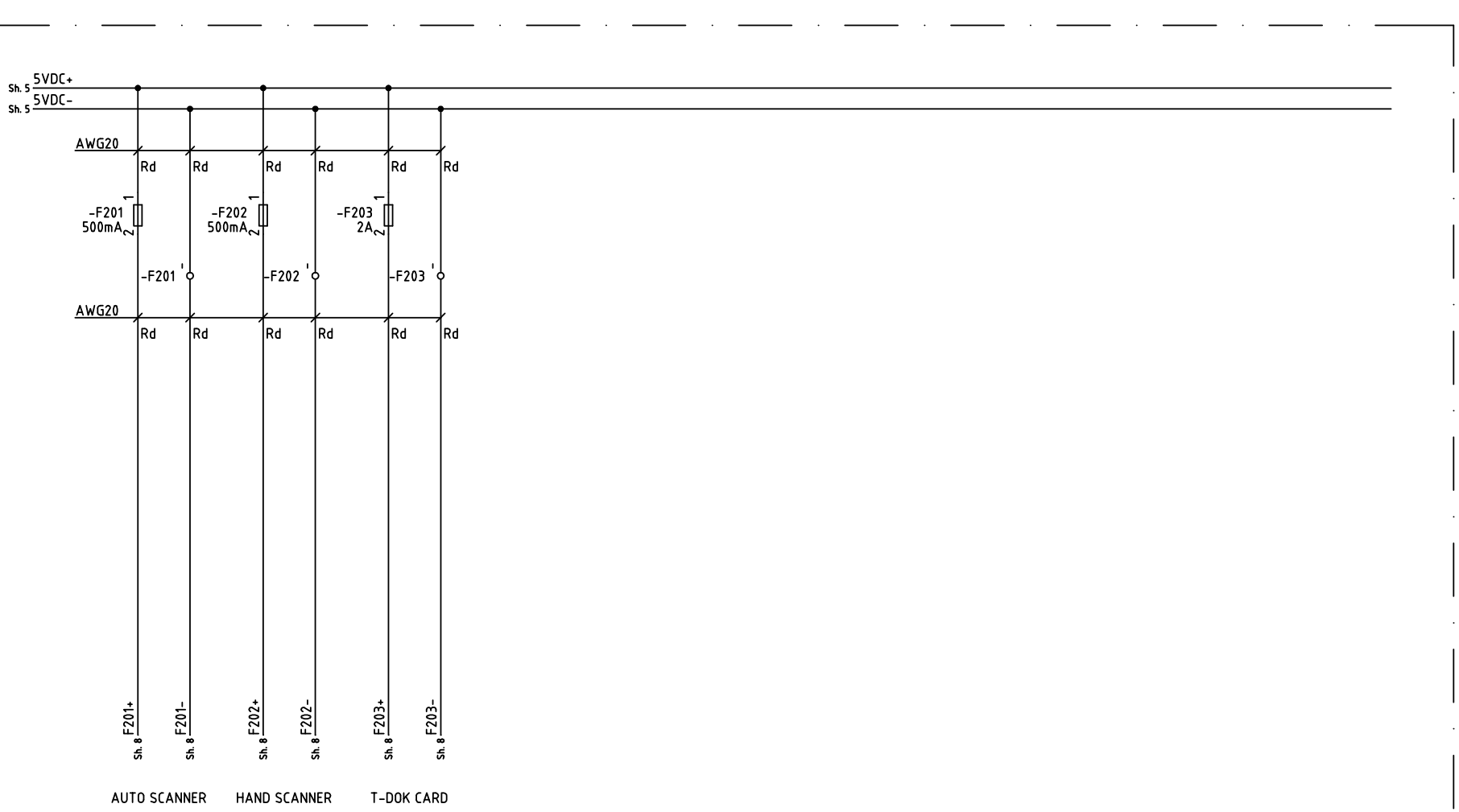

DRAWN BY	CHECKED BY (GETINGE)	APPROVAL (GETINGE)	DATE (APP.)	PROJECT NUMBER
MHn	JSn	JSn	2006-01-02	

GETINGE
GETINGE DISINFECTION
P.O. BOX 1505
SE 352 15 VAXJO
SWEDEN

UTENSIL WASHER TYPE 88-5 EL
CIRCUIT DIAGRAM
5VDC

DRAWING NUMBER	SHEET
5027555	7
DATE / REV.	NEXT SHEET
2005-05-16 / A	8

REV:	NOTE:	SIGN.	DATE:
A	PU06-0122	HS	070816

Downloaded from www.Manualslib.com manuals search engine

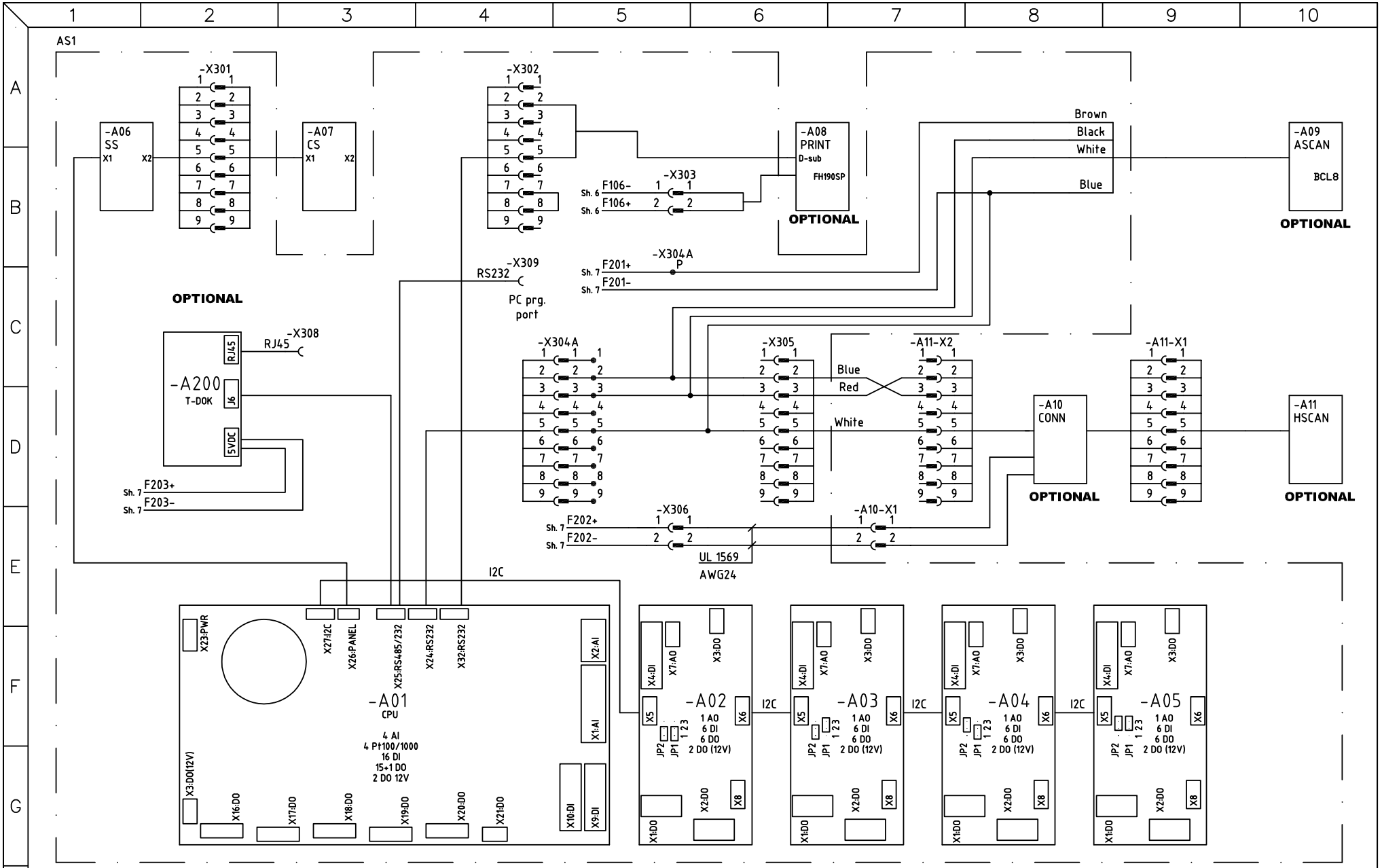

DRAWN BY	CHECKED BY (GETINGE)	APPROVAL (GETINGE)	DATE (APP.)	PROJECT NUMBER
MHn	JSn	JSn	2006-01-02	

GETINGE
GETINGE DISINFECTION
P.O. BOX 1505
SE 352 15 VAXJO
SWEDEN

UTENSIL WASHER TYPE 88-5 EL
CIRCUIT DIAGRAM
PACS300

DRAWING NUMBER	SHEET
5027555	8
DATE / REV.	NEXT SHEET
2005-05-16 / A	9

A	PU06-0122	HS	070816
REV:	NOTE:	SIGN.	DATE:

Downloaded from www.Manualslib.com manuals search engine

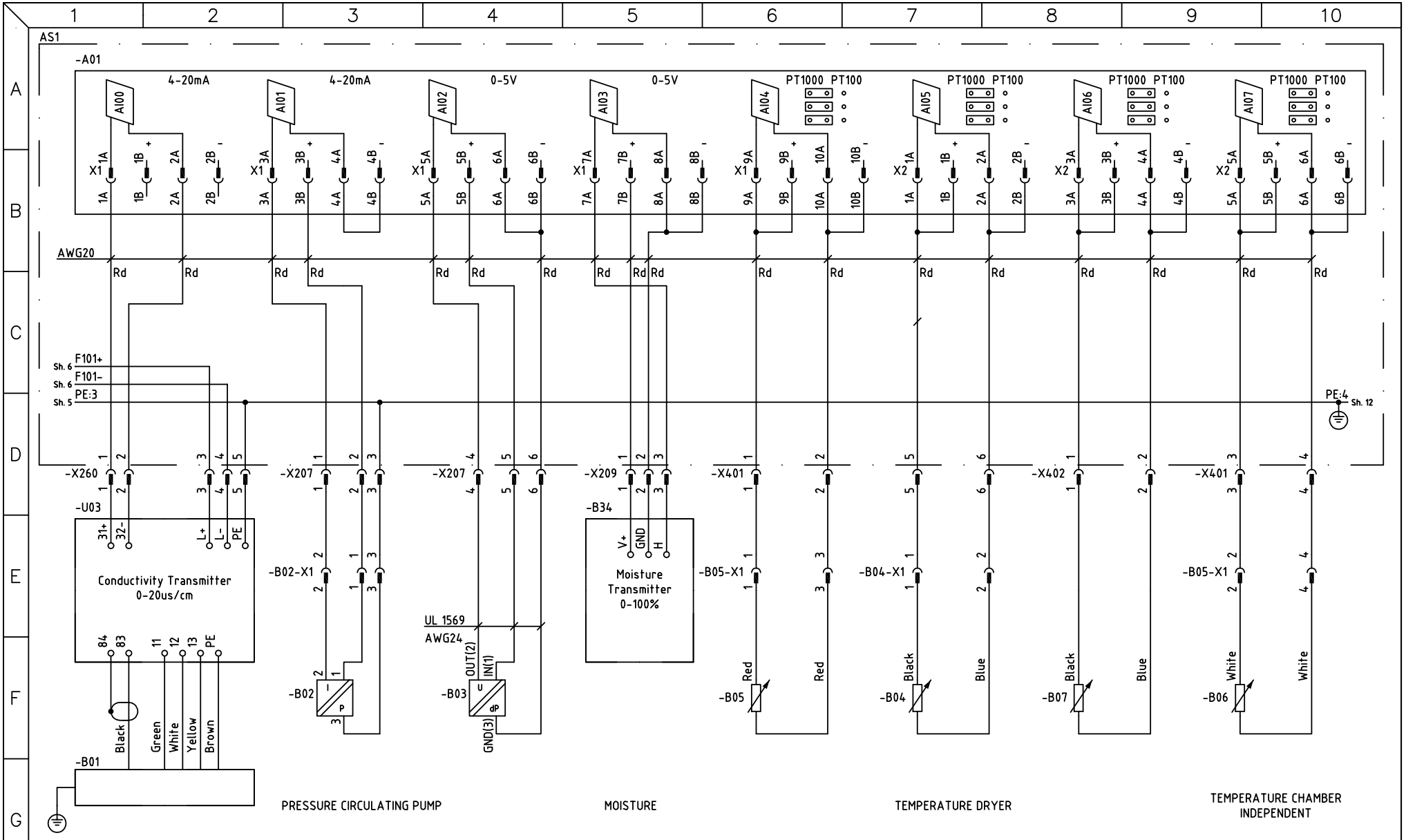

DRAWN BY	CHECKED BY (GETINGE)	APPROVAL (GETINGE)	DATE (APP.)	PROJECT NUMBER
MHn	JSn	JSn	2006-01-02	

GETINGE
GETINGE DISINFECTION
P.O. BOX 1505
SE 352 15 VAXJO
SWEDEN

UTENSIL WASHER TYPE 88-5 EL
CIRCUIT DIAGRAM
AI00-AI07

DRAWING NUMBER	SHEET
5027555	9
DATE / REV.	NEXT SHEET
2005-05-16 / A	10

A	PU06-0122	HS	070816
REV:	NOTE:	SIGN.	DATE:

Downloaded from www.Manualslib.com manuals search engine

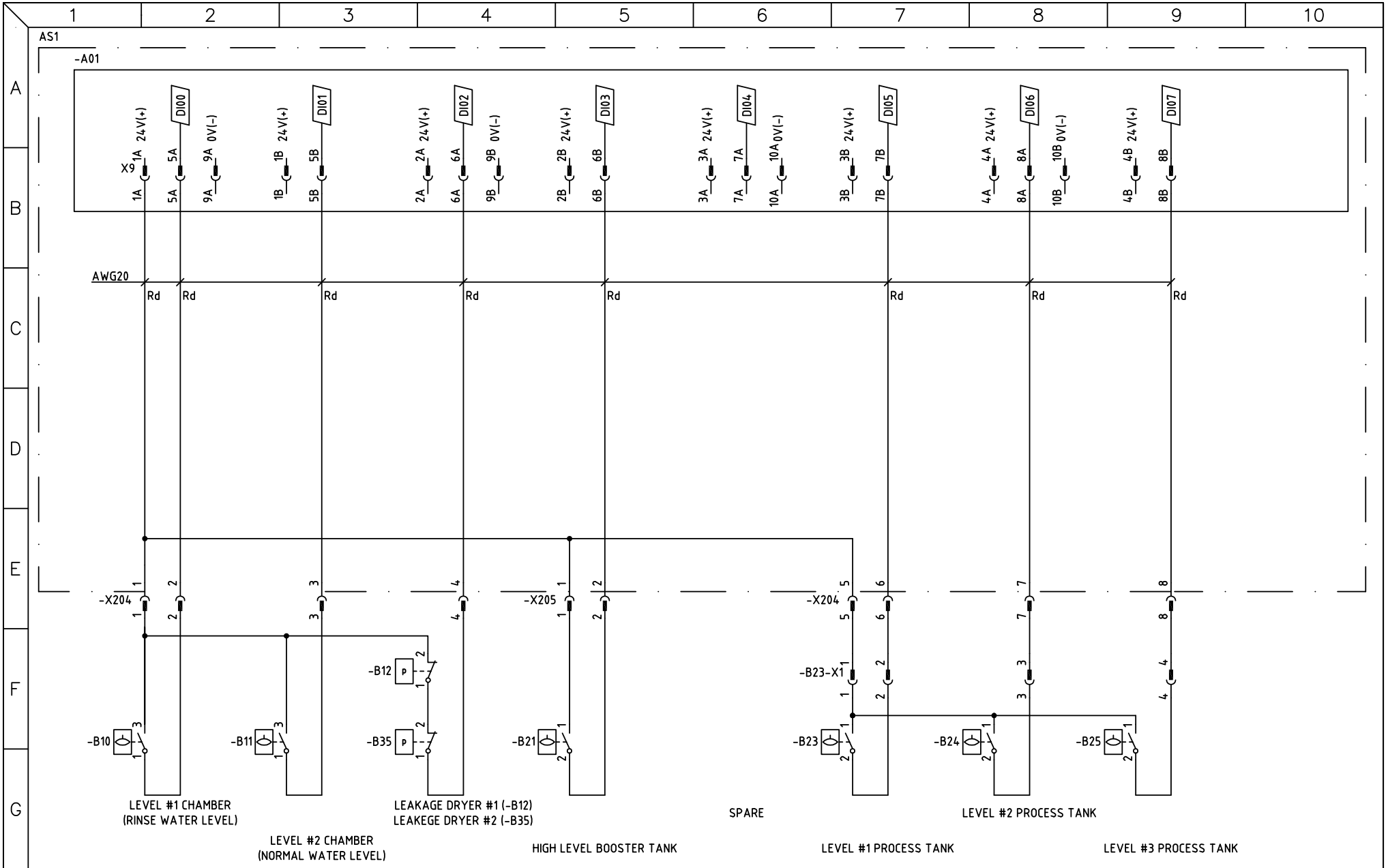

DRAWN BY	CHECKED BY (GETINGE)	APPROVAL (GETINGE)	DATE (APP.)	PROJECT NUMBER
MHn	JSn	JSn	2006-01-02	

GETINGE
GETINGE DISINFECTION
P.O. BOX 1505
SE 352 15 VAXJO
SWEDEN

UTENSIL WASHER TYPE 88-5 EL
CIRCUIT DIAGRAM
DI00-DI07

DRAWING NUMBER	SHEET
5027555	10
DATE / REV.	NEXT SHEET
2005-05-16 / A	11

REV:	NOTE:	SIGN.	DATE:
A	PU06-0122	HS	070816

Downloaded from www.Manualslib.com manuals search engine

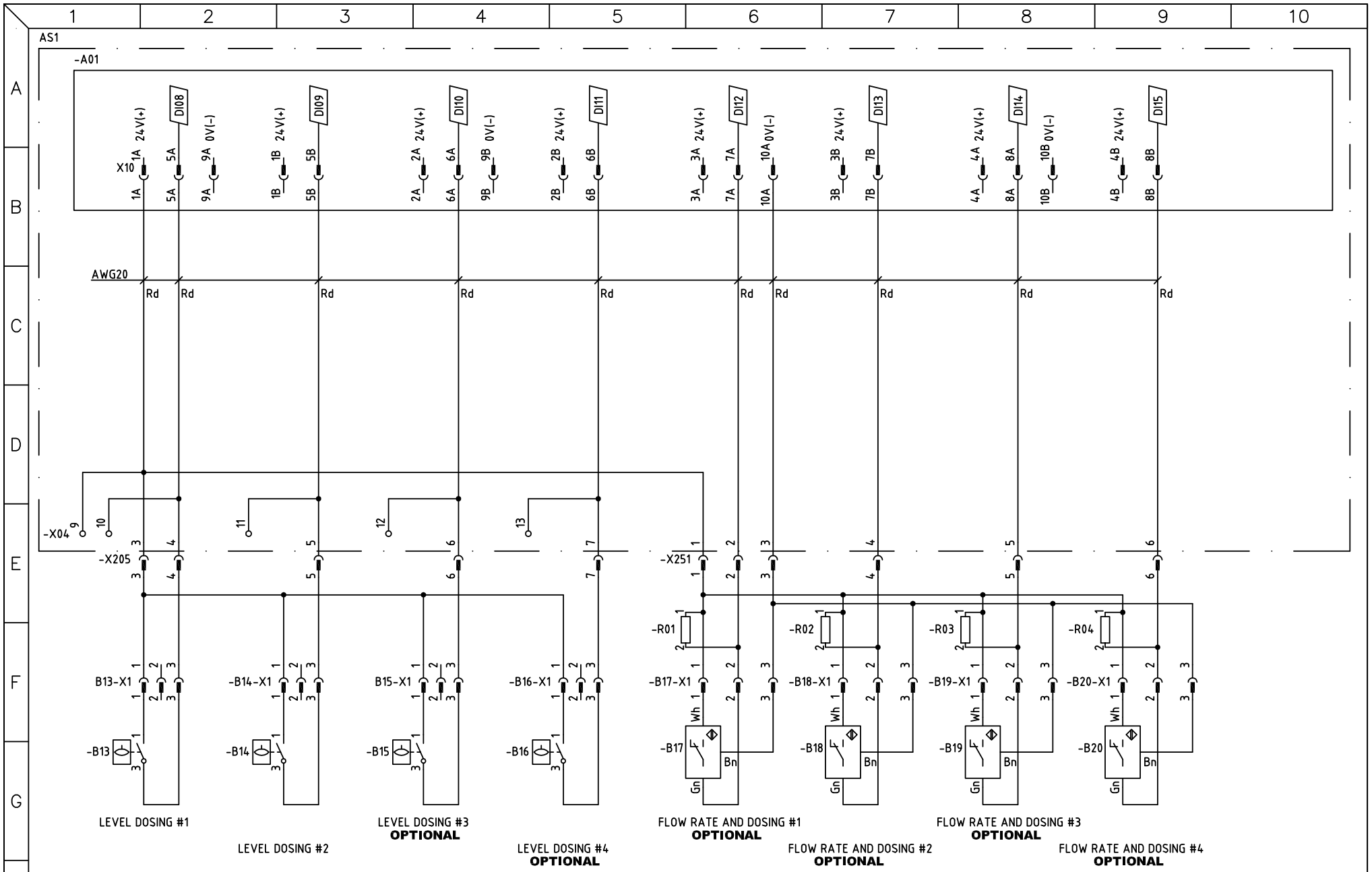

DRAWN BY	CHECKED BY (GETINGE)	APPROVAL (GETINGE)	DATE (APP.)	PROJECT NUMBER
MHn	JSn	JSn	2006-01-02	

GETINGE
GETINGE DISINFECTION
P.O. BOX 1505
SE 352 15 VAXJO
SWEDEN

UTENSIL WASHER TYPE 88-5 EL
CIRCUIT DIAGRAM
DI08-DI15

DRAWING NUMBER	SHEET
5027555	11
DATE / REV.	NEXT SHEET
2005-05-16 / A	12

A	PU06-0122	HS	070816
REV:	NOTE:	SIGN.	DATE:

Downloaded from www.Manualslib.com manuals search engine

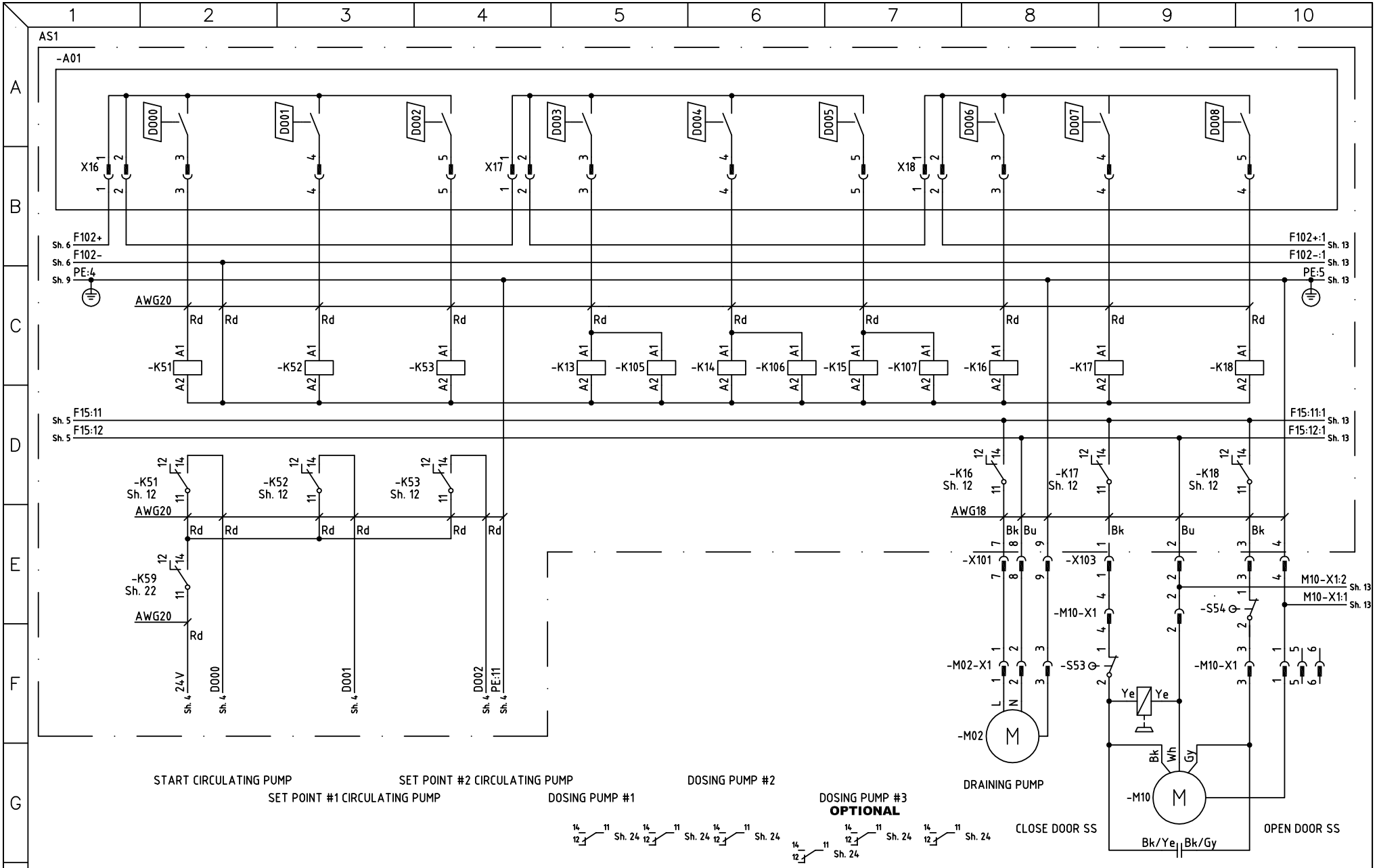

DRAWN BY	CHECKED BY (GETINGE)	APPROVAL (GETINGE)	DATE (APP.)	PROJECT NUMBER
MHn	JSn	JSn	2006-01-02	

GETINGE
GETINGE DISINFECTION
P.O. BOX 1505
SE 352 15 VAXJO
SWEDEN

UTENSIL WASHER TYPE 88-5 EL
CIRCUIT DIAGRAM
D000-D008

DRAWING NUMBER	SHEET
5027555	12
DATE / REV.	NEXT SHEET
2005-05-16 / A	13

A	PU06-0122	HS	070816
REV:	NOTE:	SIGN.	DATE:

Downloaded from www.Manualslib.com manuals search engine

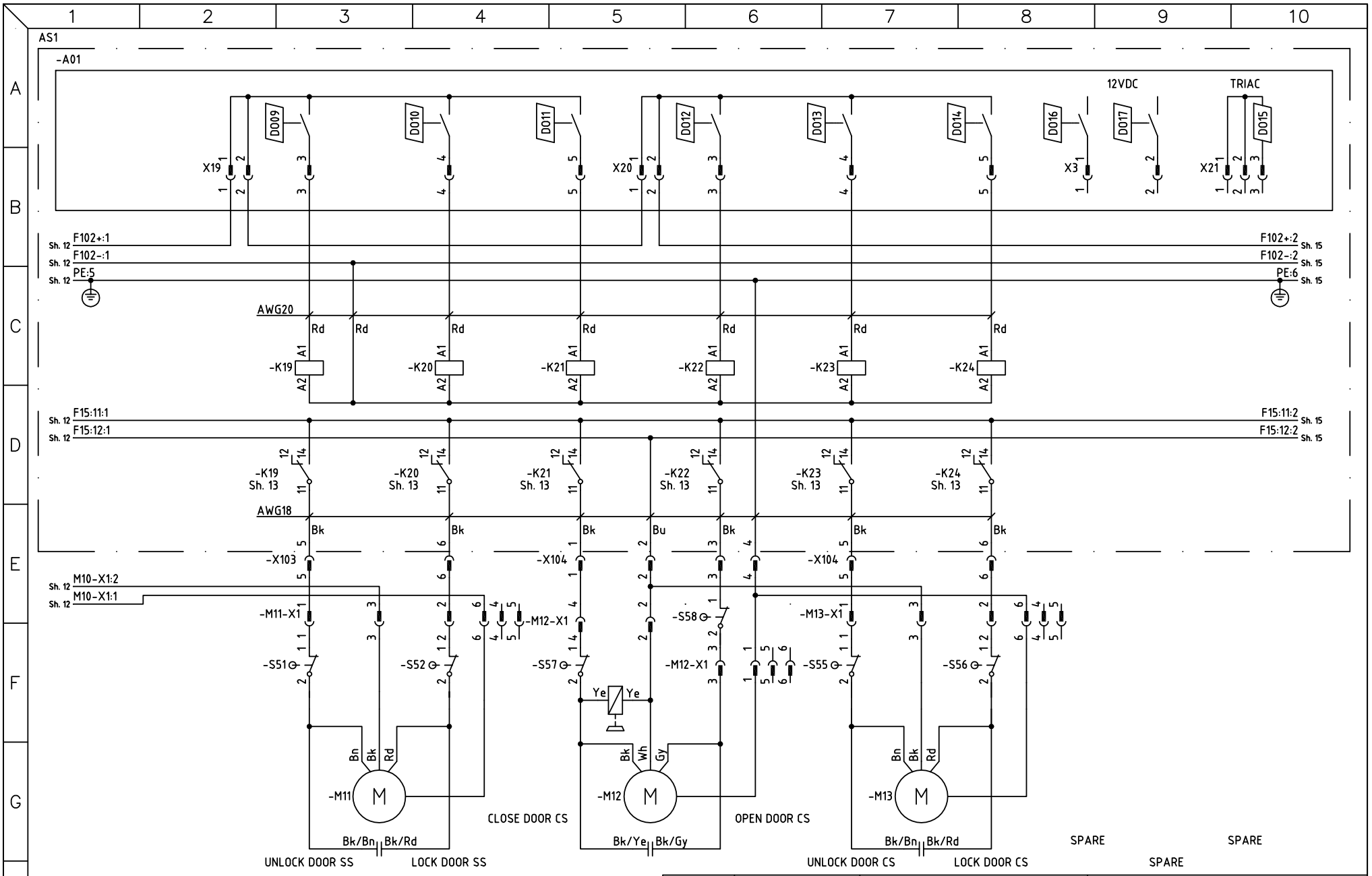

DRAWN BY	CHECKED BY (GETINGE)	APPROVAL (GETINGE)	DATE (APP.)	PROJECT NUMBER
MHn	JSn	JSn	2006-01-02	

GETINGE
GETINGE DISINFECTION
P.O. BOX 1505
SE 352 15 VAXJO
SWEDEN

UTENSIL WASHER TYPE 88-5 EL
CIRCUIT DIAGRAM
DO09-DO17

DRAWING NUMBER	SHEET
5027555	13
DATE / REV.	NEXT SHEET
2005-05-16 / A	14

A	PU06-0122	HS	070816
REV:	NOTE:	SIGN.	DATE:

Downloaded from www.Manualslib.com manuals search engine

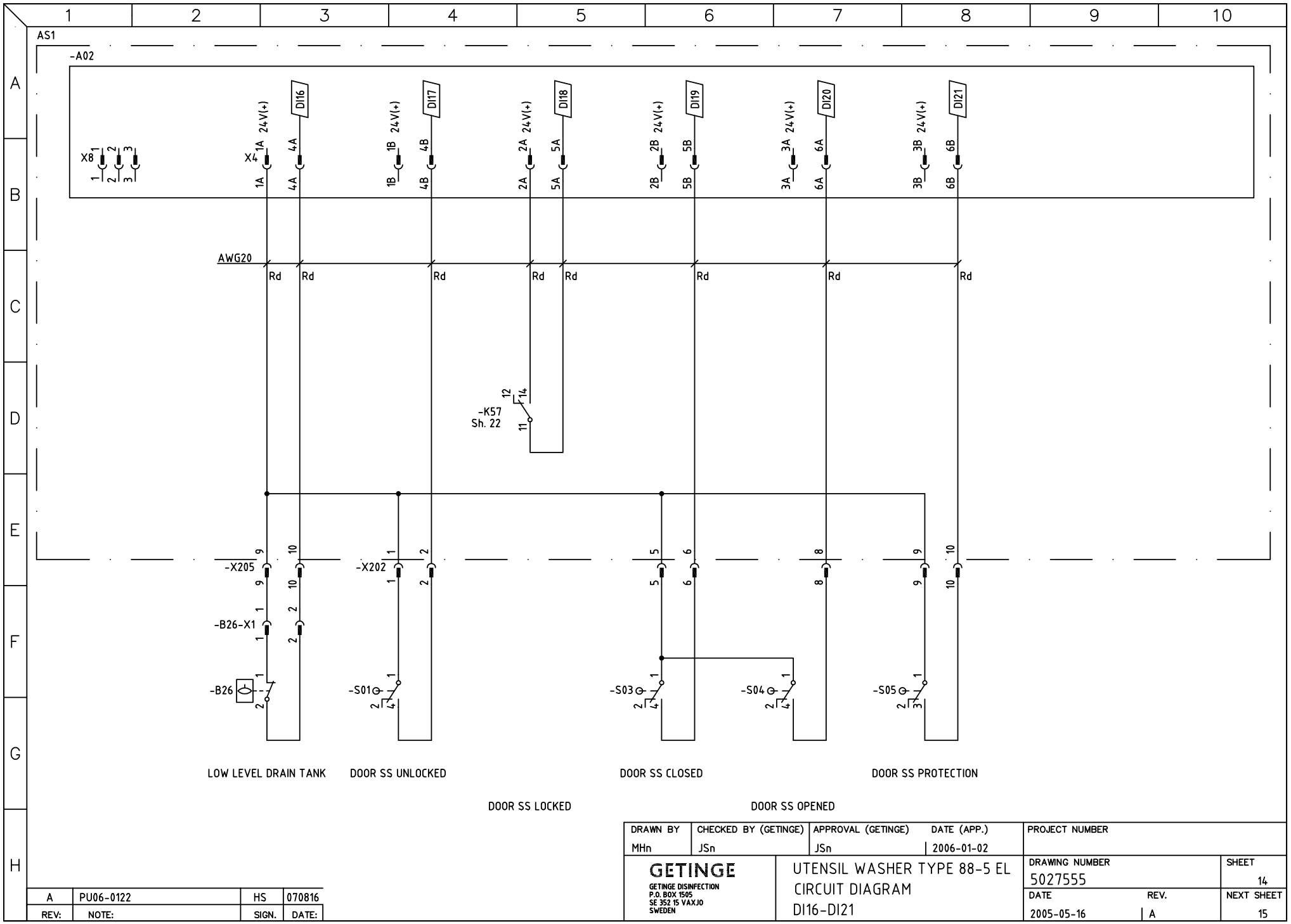

DRAWN BY	CHECKED BY (GETINGE)	APPROVAL (GETINGE)	DATE (APP.)	PROJECT NUMBER
MHn	JSn	JSn	2006-01-02	

GETINGE
GETINGE DISINFECTION
P.O. BOX 1505
SE 352 15 VAXJO
SWEDEN

UTENSIL WASHER TYPE 88-5 EL
CIRCUIT DIAGRAM
DI16-DI21

DRAWING NUMBER	SHEET
5027555	14
DATE / REV.	NEXT SHEET
2005-05-16 / A	15

REV:	NOTE:	SIGN.	DATE:
A	PU06-0122	HS	070816

Downloaded from www.Manualslib.com manuals search engine

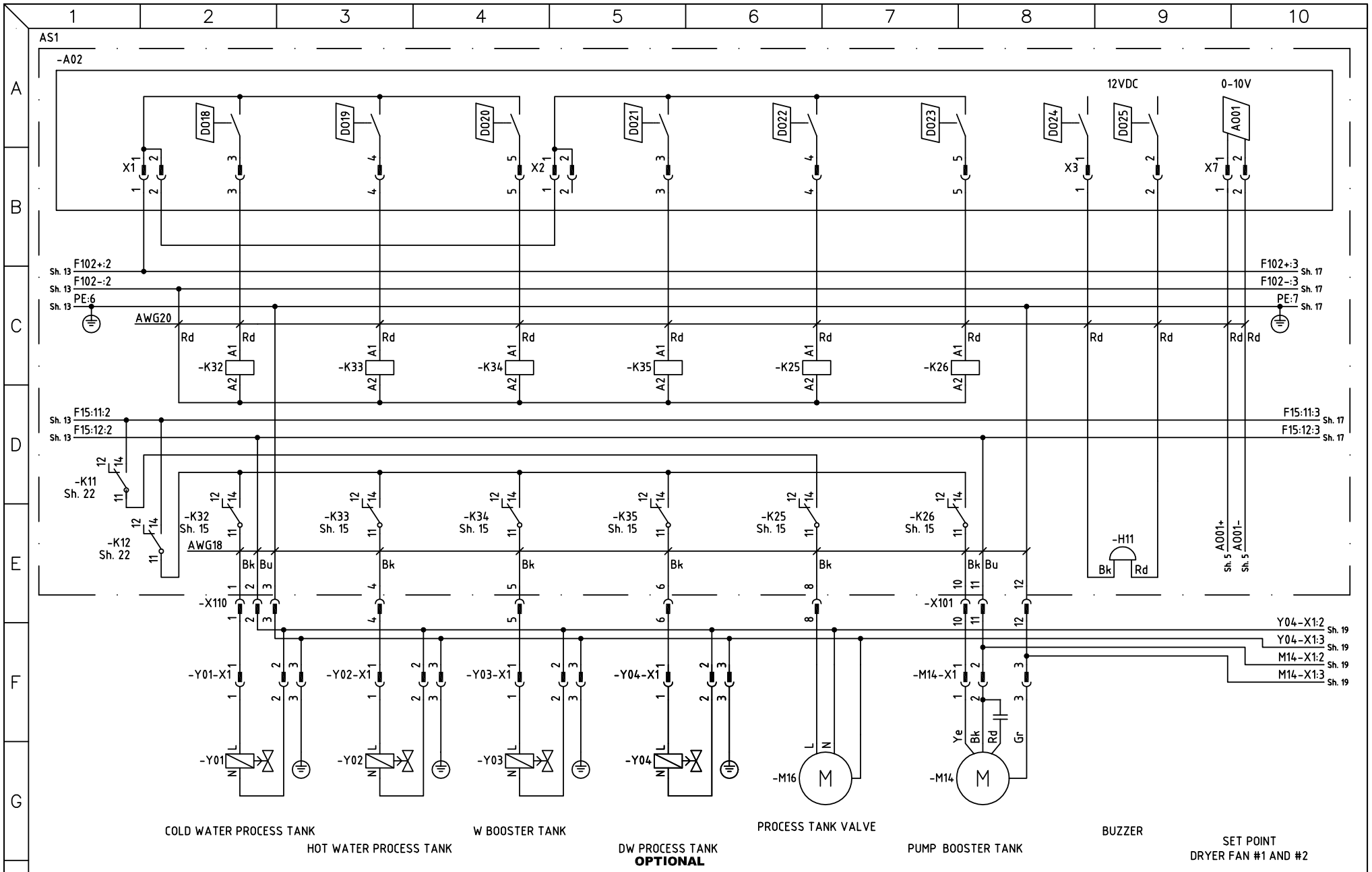

DRAWN BY	CHECKED BY (GETINGE)	APPROVAL (GETINGE)	DATE (APP.)	PROJECT NUMBER
MHn	JSn	JSn	2006-01-02	

GETINGE
GETINGE DISINFECTION
P.O. BOX 1505
SE 352 15 VAXJO
SWEDEN

UTENSIL WASHER TYPE 88-5 EL
CIRCUIT DIAGRAM
D018-D025, A001

DRAWING NUMBER	SHEET
5027555	15
DATE / REV.	NEXT SHEET
2005-05-16 / A	16

A	PU06-0122	HS	070816
REV:	NOTE:	SIGN.	DATE:

Downloaded from www.Manualslib.com manuals search engine

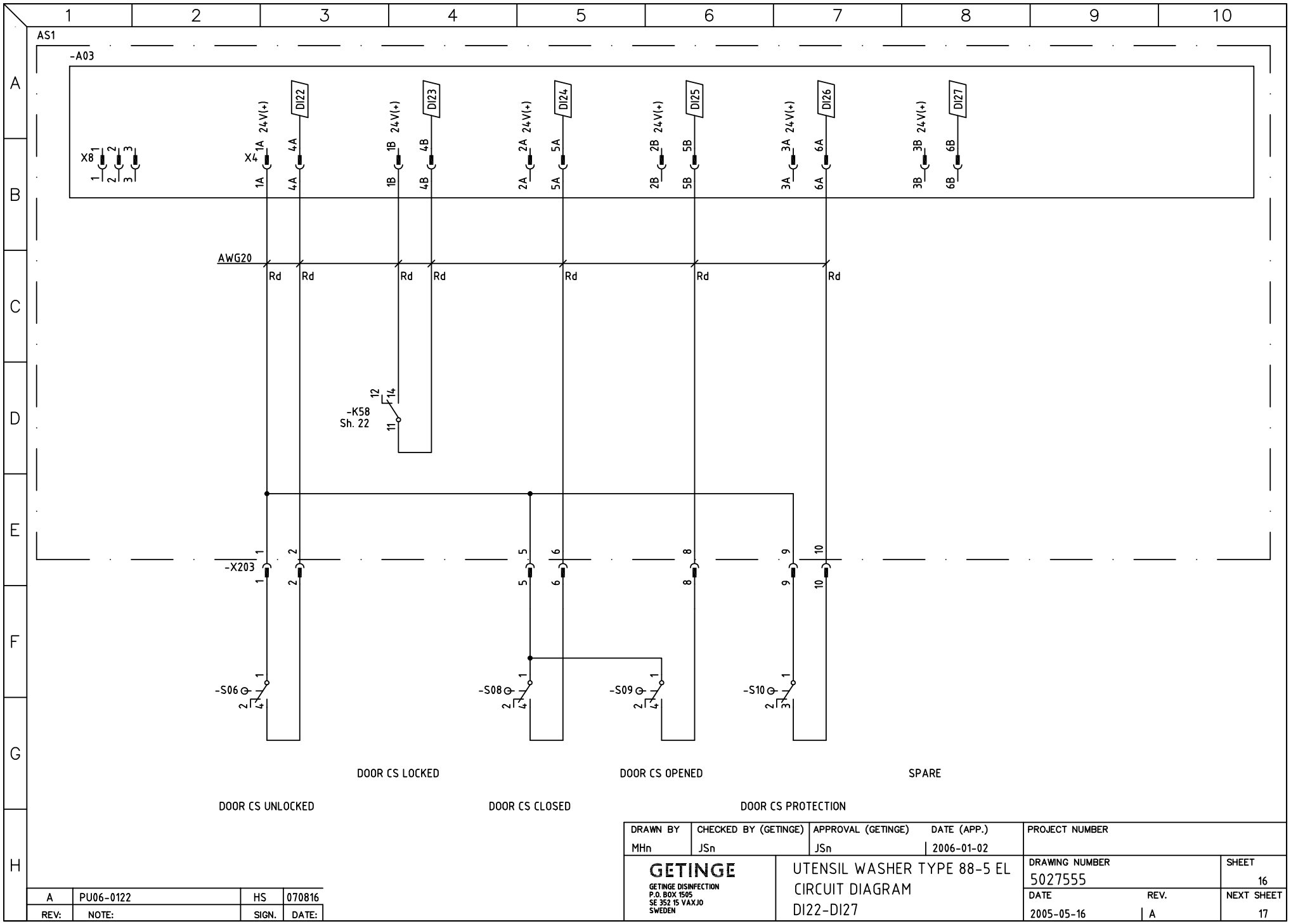

DRAWN BY	CHECKED BY (GETINGE)	APPROVAL (GETINGE)	DATE (APP.)	PROJECT NUMBER
MHn	JSn	JSn	2006-01-02	

GETINGE
GETINGE DISINFECTION
P.O. BOX 1505
SE 352 15 VAXJO
SWEDEN

UTENSIL WASHER TYPE 88-5 EL
CIRCUIT DIAGRAM
DI22-DI27

DRAWING NUMBER	SHEET
5027555	16
DATE / REV.	NEXT SHEET
2005-05-16 / A	17

REV:	NOTE:	SIGN.	DATE:
A	PU06-0122	HS	070816

Downloaded from www.Manualslib.com manuals search engine

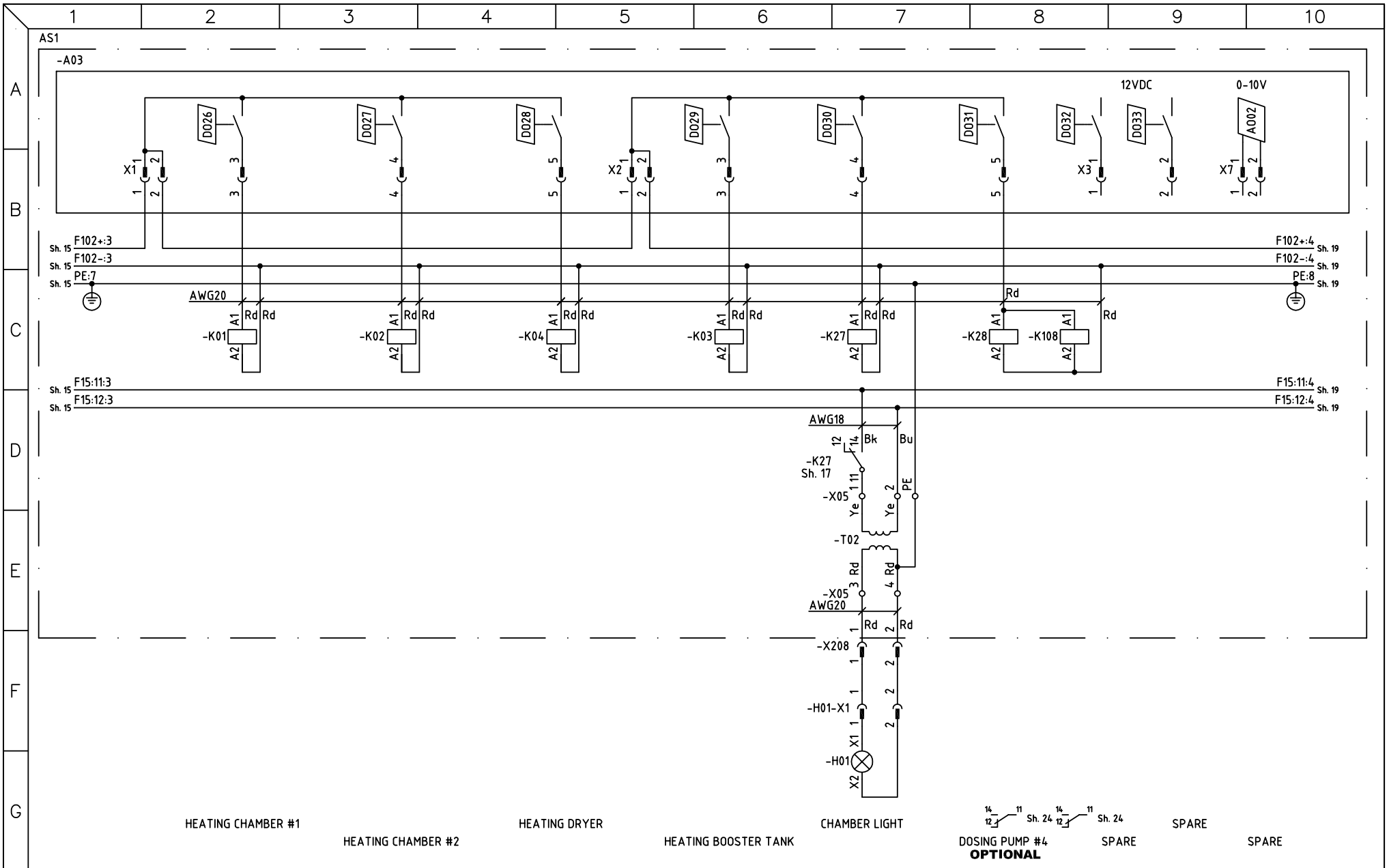

DRAWN BY	CHECKED BY (GETINGE)	APPROVAL (GETINGE)	DATE (APP.)	PROJECT NUMBER
MHn	JSn	JSn	2006-01-02	

GETINGE
GETINGE DISINFECTION
P.O. BOX 1505
SE 352 15 VAXJO
SWEDEN

UTENSIL WASHER TYPE 88-5 EL
CIRCUIT DIAGRAM
D026-D033, A002

DRAWING NUMBER	SHEET
5027555	17
DATE / REV.	NEXT SHEET
2005-05-16 / A	18

A	PU06-0122	HS	070816
REV:	NOTE:	SIGN.	DATE:

Downloaded from www.Manualslib.com manuals search engine

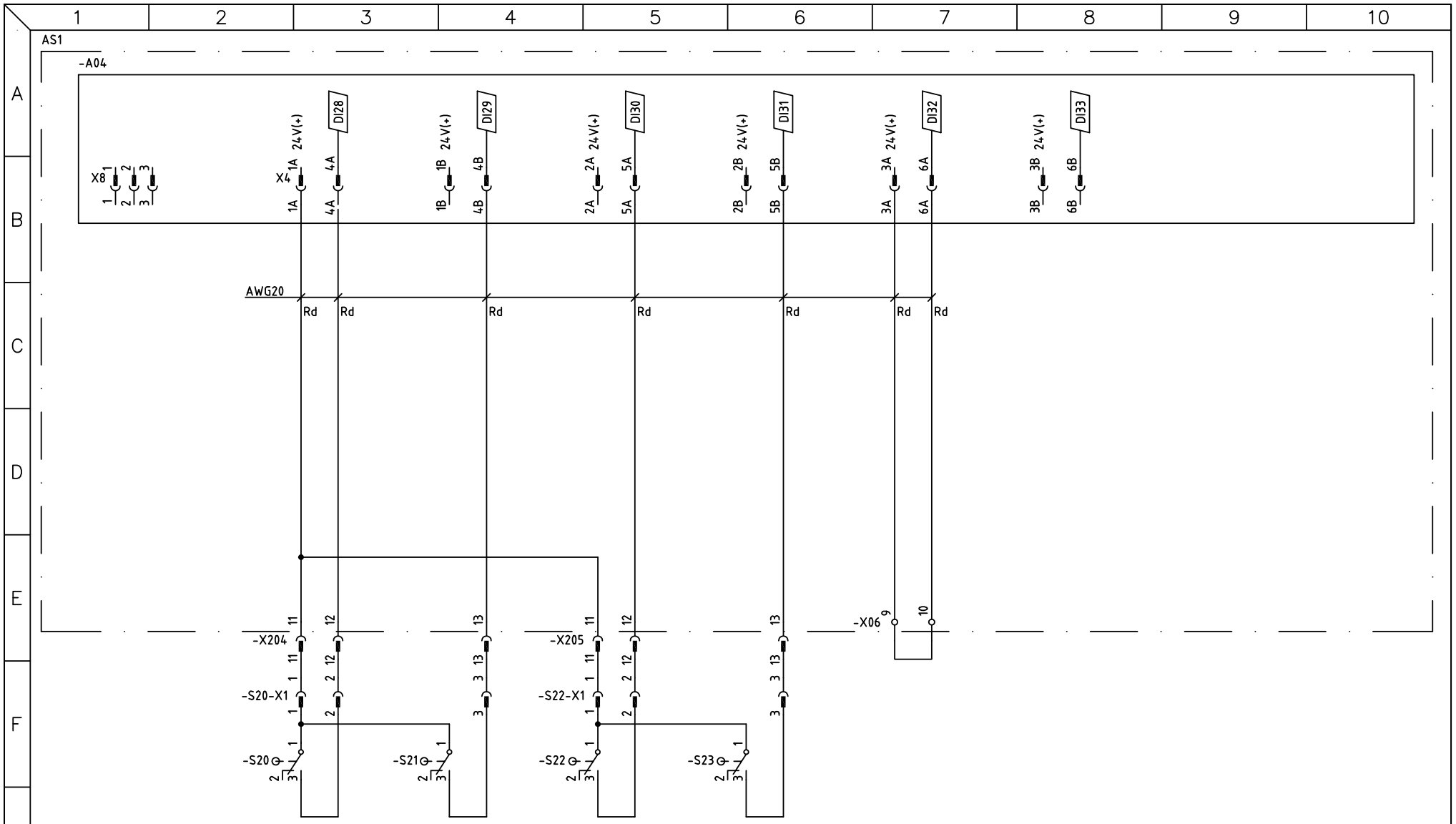

DRAWN BY	CHECKED BY (GETINGE)	APPROVAL (GETINGE)	DATE (APP.)	PROJECT NUMBER
MHn	JSn	JSn	2006-01-02	

GETINGE
GETINGE DISINFECTION
P.O. BOX 1505
SE 352 15 VAXJO
SWEDEN

UTENSIL WASHER TYPE 88-5 EL
CIRCUIT DIAGRAM
DI28-DI33

DRAWING NUMBER	SHEET
5027555	18
DATE / REV.	NEXT SHEET
2005-05-16 / A	19

REV:	NOTE:	SIGN.	DATE:
A	PU06-0122	HS	070816

Downloaded from www.Manualslib.com manuals search engine

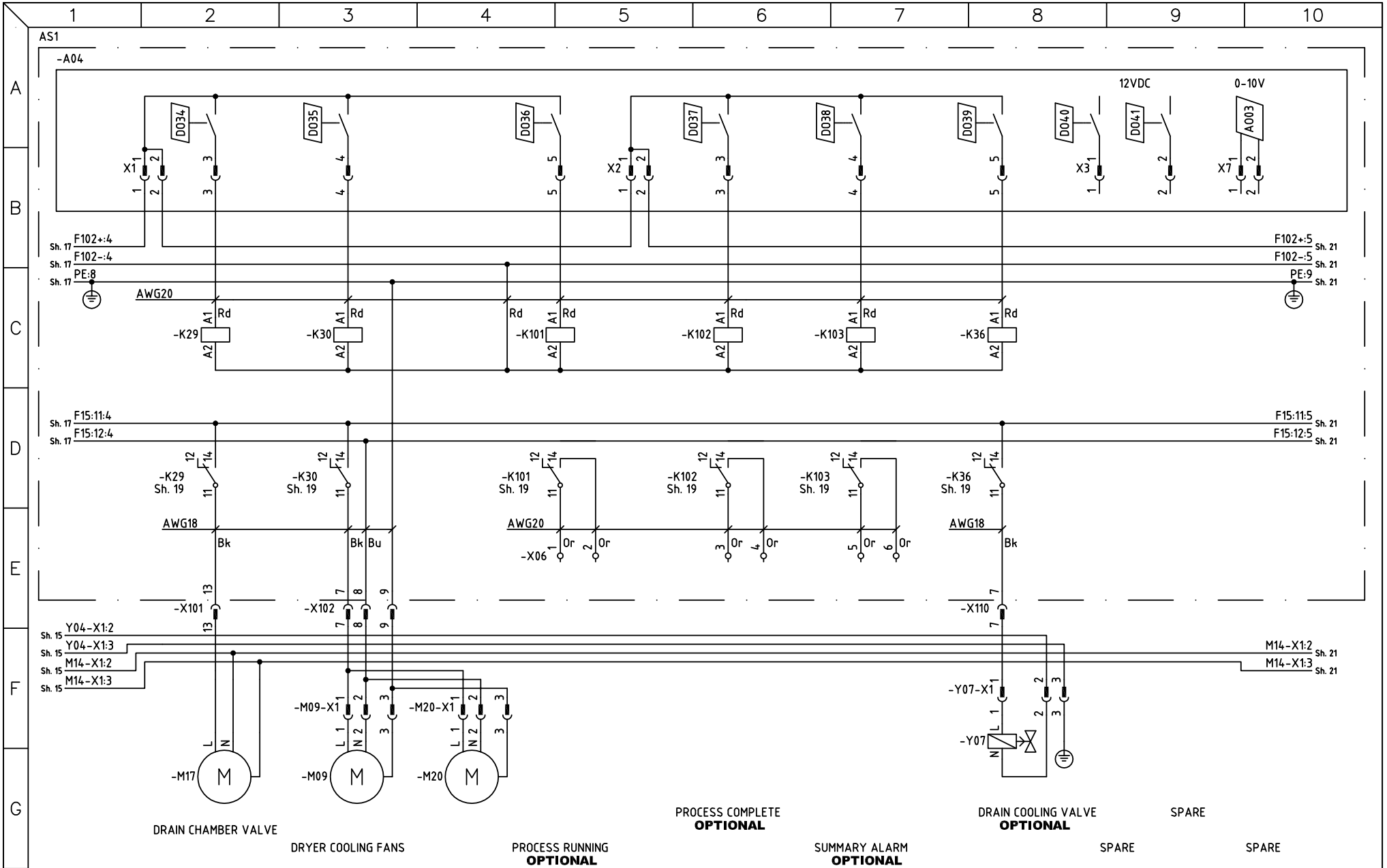

DRAWN BY	CHECKED BY (GETINGE)	APPROVAL (GETINGE)	DATE (APP.)	PROJECT NUMBER
MHn	JSn	JSn	2006-01-02	

GETINGE
GETINGE DISINFECTION
P.O. BOX 1505
SE 352 15 VAXJO
SWEDEN

UTENSIL WASHER TYPE 88-5 EL
CIRCUIT DIAGRAM
D034-D041, A003

DRAWING NUMBER	SHEET
5027555	19
DATE / REV.	NEXT SHEET
2005-05-16 / A	20

A	PU06-0122	HS	070816
REV:	NOTE:	SIGN.	DATE:

Downloaded from www.Manualslib.com manuals search engine

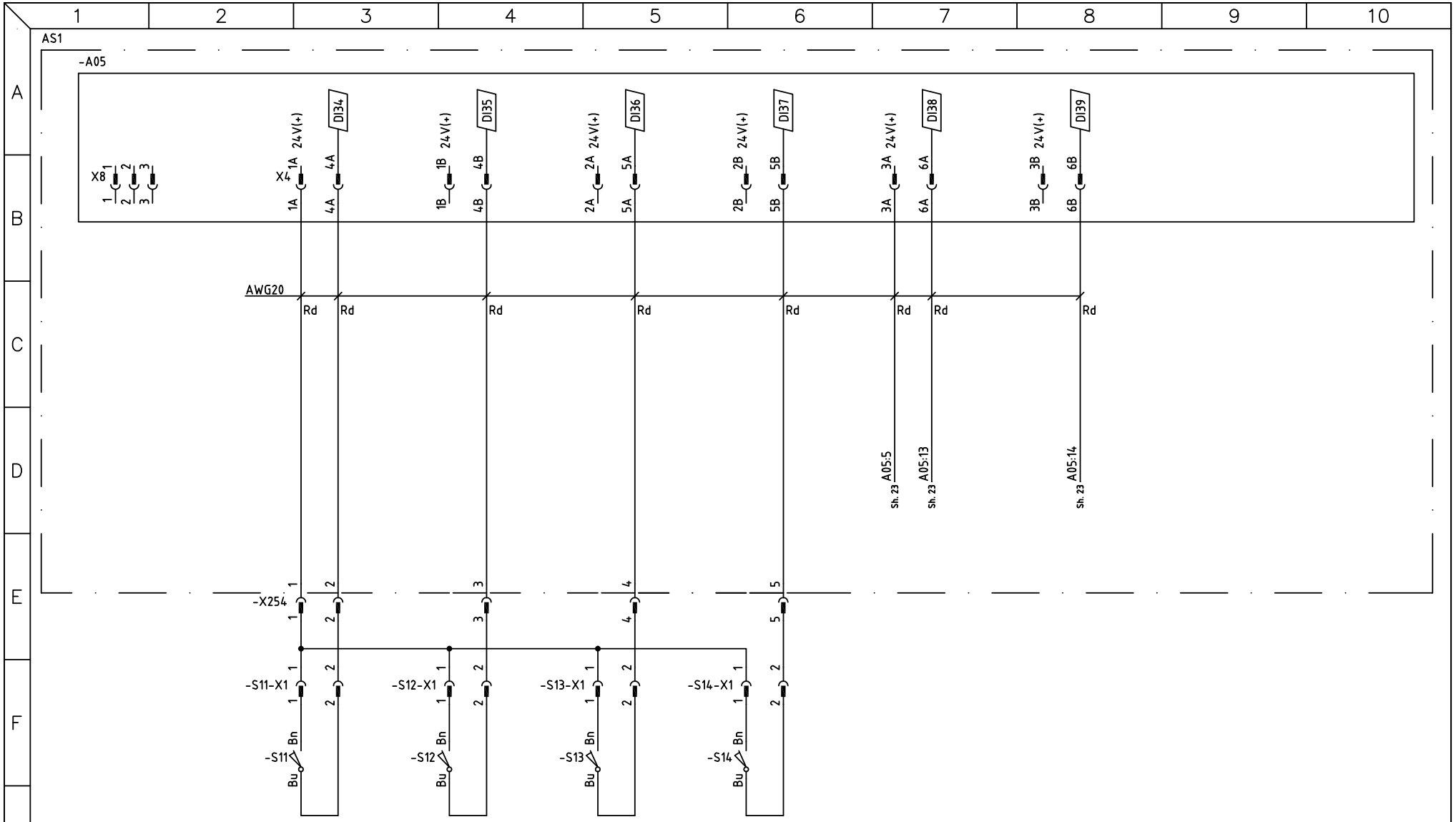

TROLLEY INDICATION #1
OPTIONAL

TROLLEY INDICATION #2
OPTIONAL

TROLLEY INDICATION #3
OPTIONAL

TROLLEY INDICATION #4
OPTIONAL

AGS INFEED READY
OPTIONAL

AGS OUTFEED READY
OPTIONAL

DRAWN BY	CHECKED BY (GETINGE)	APPROVAL (GETINGE)	DATE (APP.)	PROJECT NUMBER
MHn	JSn	JSn	2006-01-02	

GETINGE
GETINGE DISINFECTION
P.O. BOX 1505
SE 352 15 VAXJO
SWEDEN

UTENSIL WASHER TYPE 88-5 EL
CIRCUIT DIAGRAM
DI34-DI39

DRAWING NUMBER	SHEET
5027555	20
DATE / REV.	NEXT SHEET
2005-05-16 / A	21

REV:	NOTE:	SIGN.	DATE:
A	PU06-0122	HS	070816

Downloaded from www.Manualslib.com manuals search engine

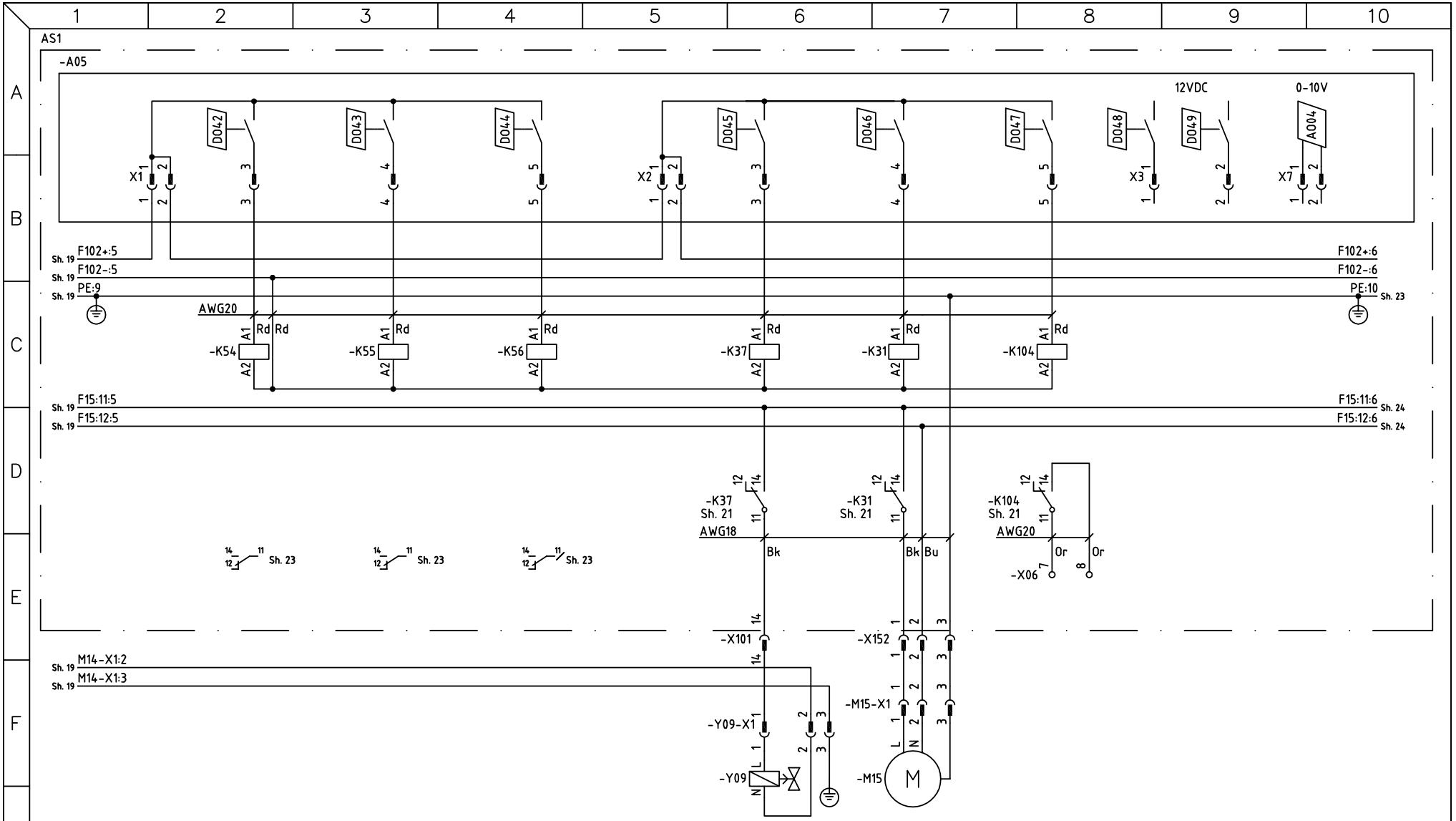

DRAWN BY	CHECKED BY (GETINGE)	APPROVAL (GETINGE)	DATE (APP.)	PROJECT NUMBER
MHn	JSn	JSn	2006-01-02	

GETINGE
GETINGE DISINFECTION
P.O. BOX 1505
SE 352 15 VÄXJÖ
SWEDEN

UTENSIL WASHER TYPE 88-5 EL
CIRCUIT DIAGRAM
D042-D049, A004

DRAWING NUMBER	SHEET
5027555	21
DATE / REV.	NEXT SHEET
2005-05-16 / A	22

REV:	NOTE:	SIGN.	DATE:
A	PU06-0122	HS	070816

Downloaded from www.Manualslib.com manuals search engine

THIS DRAWING CONTAINS CONFIDENTIAL INFORMATION AND REMAINS THE PROPERTY OF GETINGE DISINFECTION AB WITHOUT WHOSE PERMISSION IT MAY NOT BE COPIED, SHOWN OR HANDED TO A THIRD PART OR USED AT THE BASIS OF ALTERNATE DESIGNS

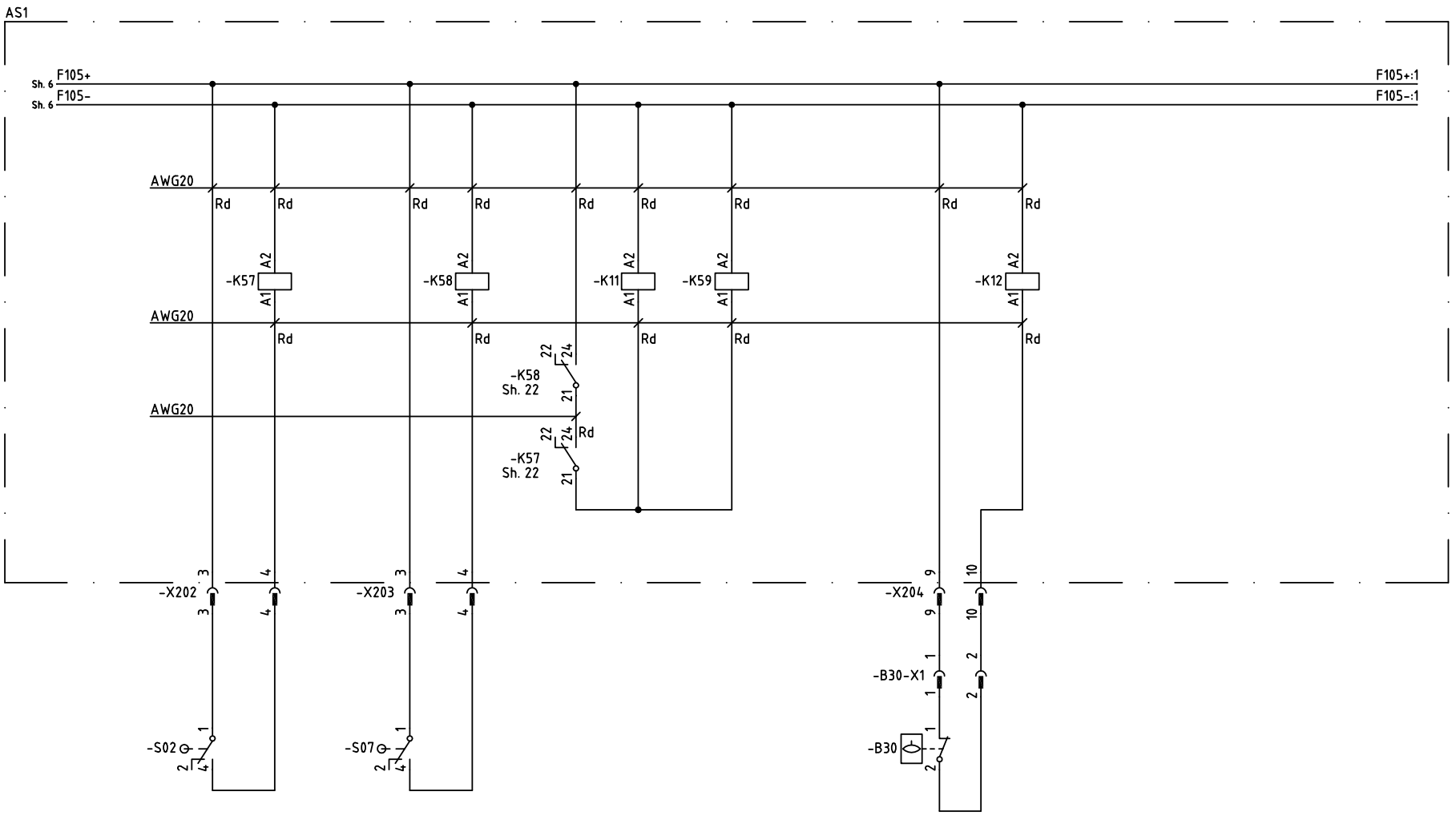

DOOR SS LOCKED

14 11 Sh. 14
24 21 Sh. 22

DOOR CS LOCKED

14 11 Sh. 16
24 21 Sh. 22

HARDWARE INTERLOCK

14 11 Sh. 15
14 11 Sh. 12

HIGH LEVEL PROCESS TANK

14 11 Sh. 15

DRAWN BY	CHECKED BY (GETINGE)	APPROVAL (GETINGE)	DATE (APP.)	PROJECT NUMBER
MHn	JSn	JSn	2006-01-02	

GETINGE
GETINGE DISINFECTION
P.O. BOX 1505
SE 352 15 VÄXJÖ
SWEDEN

UTENSIL WASHER TYPE 88-5 EL
CIRCUIT DIAGRAM
HARDWARE INTERLOCKS

DRAWING NUMBER	SHEET
5027555	22
DATE / REV.	NEXT SHEET
2005-05-16 / A	23

REV:	NOTE:	SIGN.	DATE:
A	PU06-0122	HS	070816

Downloaded from www.Manualslib.com manuals search engine

THIS DRAWING CONTAINS CONFIDENTIAL INFORMATION AND REMAINS THE PROPERTY OF GETINGE DISINFECTION AB WITHOUT WHOSE PERMISSION IT MAY NOT BE COPIED, SHOWN OR HANDED TO A THIRD PART OR USED AT THE BASIS OF ALTERNATE DESIGNS

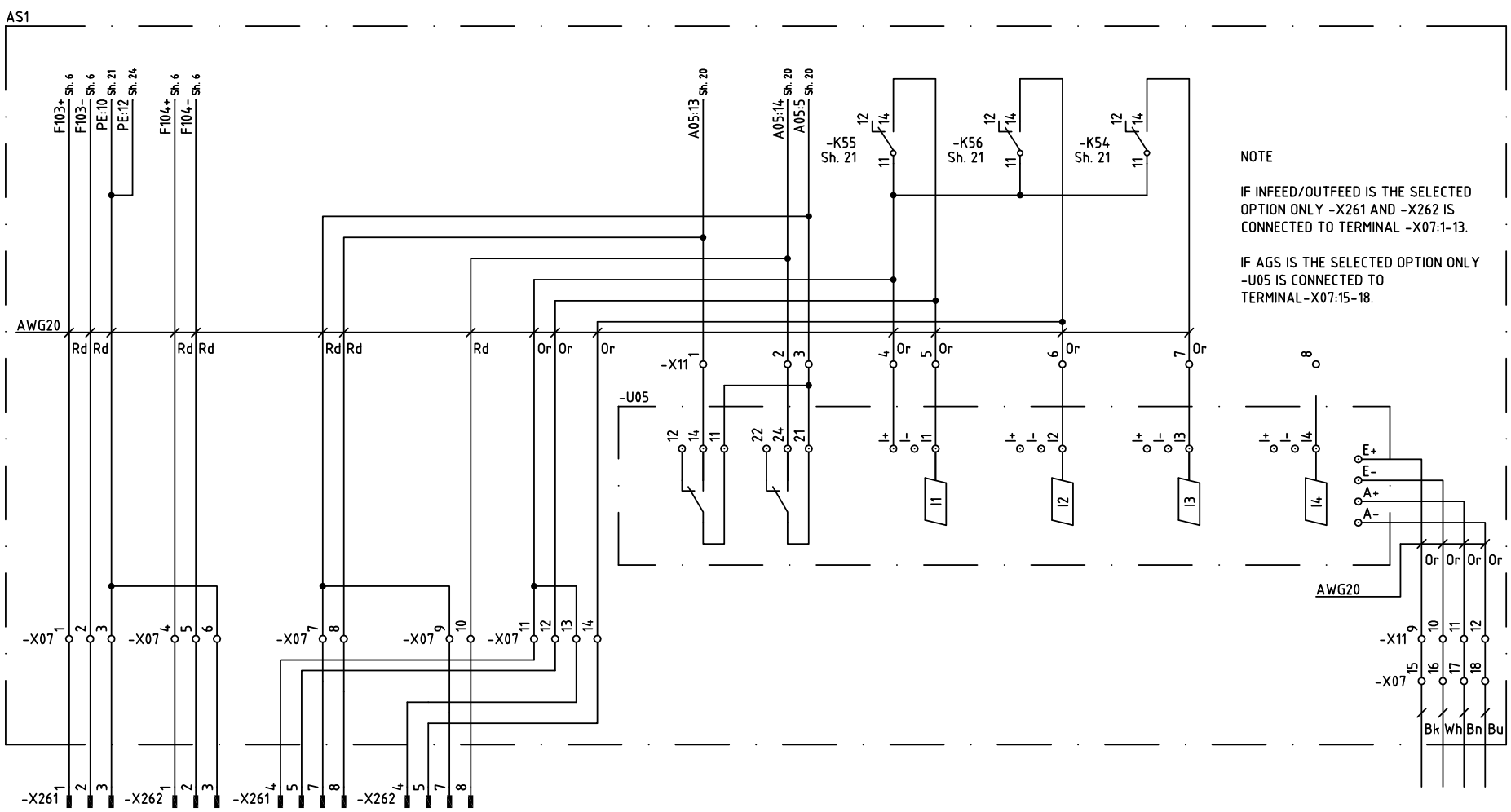

DRAWN BY	CHECKED BY (GETINGE)	APPROVAL (GETINGE)	DATE (APP.)	PROJECT NUMBER
MHn	JSn	JSn	2006-01-02	

GETINGE
GETINGE DISINFECTION
P.O. BOX 1505
SE 352 15 VAXJO
SWEDEN

UTENSIL WASHER TYPE 88-5 EL
CIRCUIT DIAGRAM
AGS SIGNALS

DRAWING NUMBER	SHEET
5027555	23
DATE / REV.	NEXT SHEET
2005-05-16 / A	24

REV:	NOTE:	SIGN.	DATE:
A	PU06-0122	HS	070816

Downloaded from www.Manualslib.com manuals search engine

THIS DRAWING CONTAINS CONFIDENTIAL INFORMATION AND REMAINS THE PROPERTY OF GETINGE DISINFECTION AB WITHOUT WHOSE PERMISSION IT MAY NOT BE COPIED, SHOWN OR HANDED TO A THIRD PART OR USED AT THE BASIS OF ALTERNATE DESIGNS

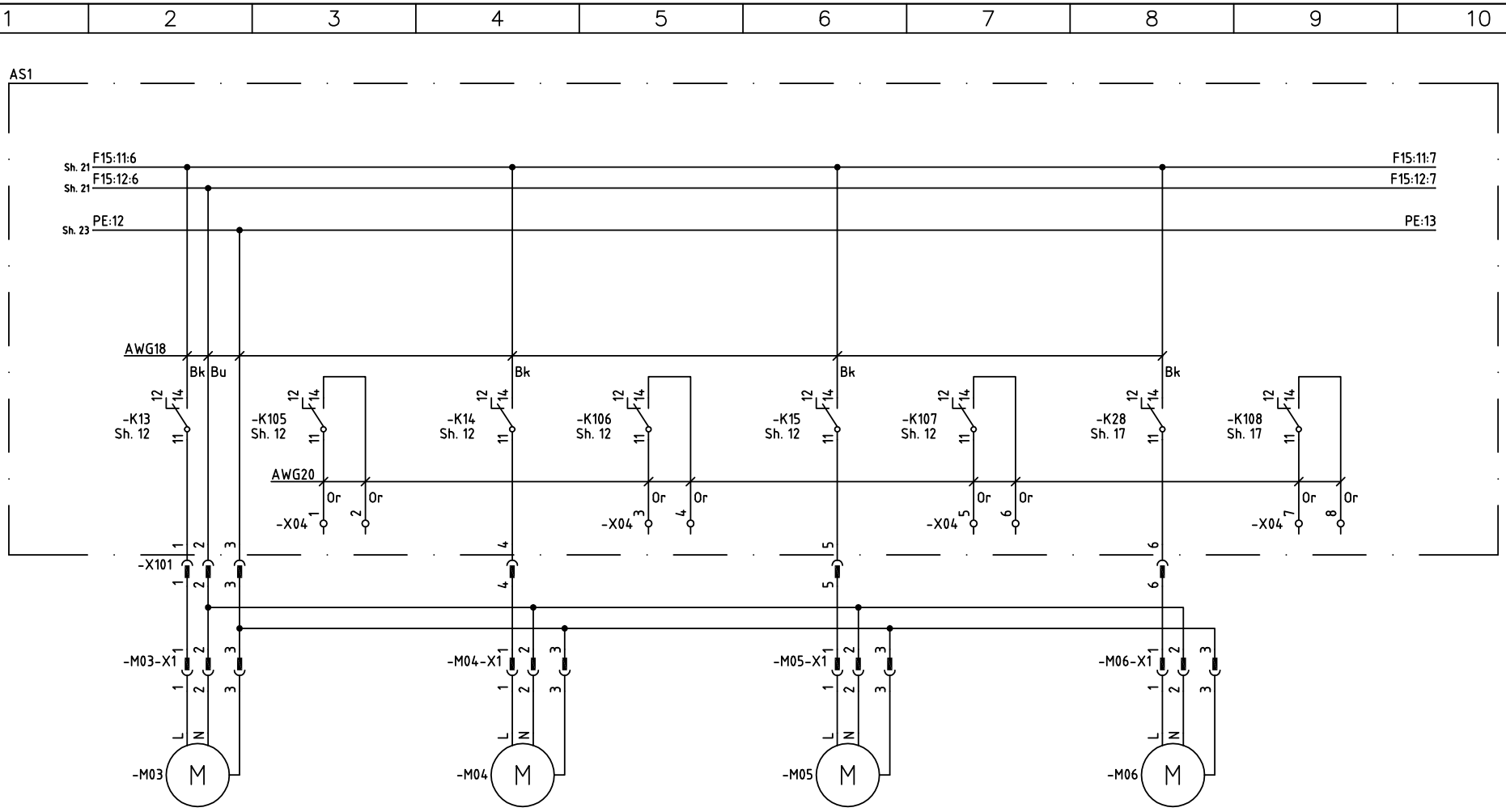

A	PU06-0122	HS	070816
REV:	NOTE:	SIGN.	DATE:

DRAWN BY	CHECKED BY (GETINGE)	APPROVAL (GETINGE)	DATE (APP.)	PROJECT NUMBER
MHn	JSn	JSn	2006-01-02	

GETINGE
GETINGE DISINFECTION
P.O. BOX 1505
SE 352 15 VÄXJÖ
SWEDEN

UTENSIL WASHER TYPE 88-5 EL
CIRCUIT DIAGRAM
DOSING PUMPS

DRAWING NUMBER		SHEET
5027555		24
DATE	REV.	NEXT SHEET
2005-05-16	A	51

Downloaded from www.Manualslib.com manuals search engine

THIS DRAWING CONTAINS CONFIDENTIAL INFORMATION AND REMAINS THE PROPERTY OF GETINGE DISINFECTION AB WITHOUT WHOSE PERMISSION IT MAY NOT BE COPIED, SHOWN OR HANDED TO A THIRD PART OR USED AT THE BASIS OF ALTERNATE DESIGNS

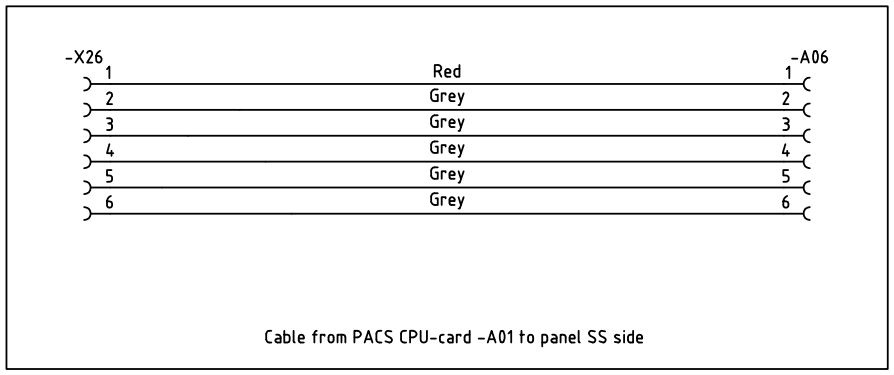

Cable from PACS CPU-card -A01 to panel SS side

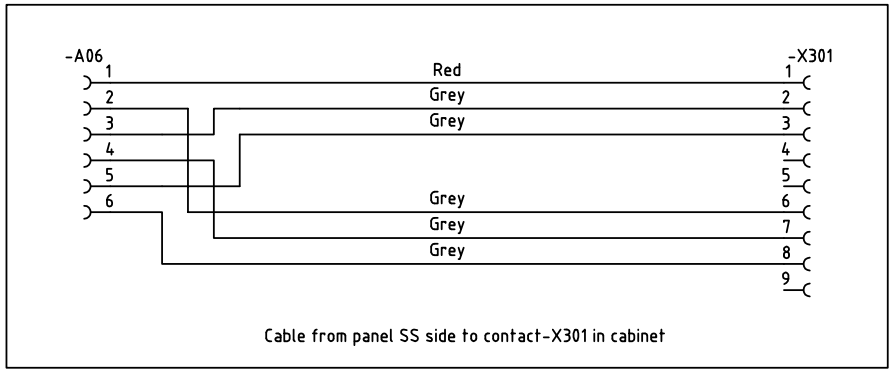

Cable from panel SS side to contact-X301 in cabinet

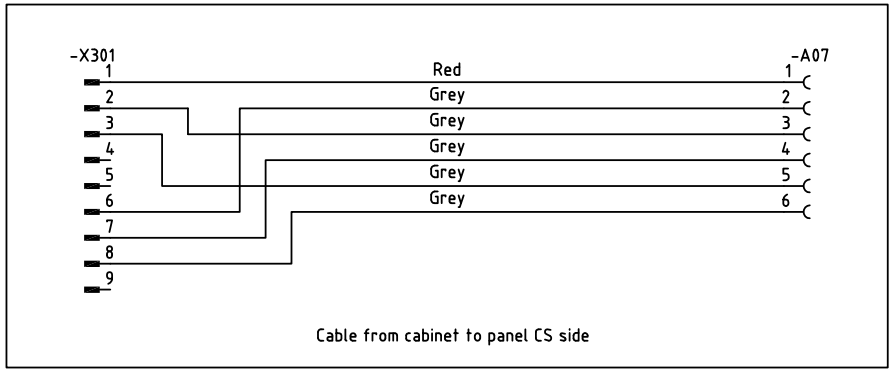

Cable from cabinet to panel CS side

DRAWN BY	CHECKED BY (GETINGE)	APPROVAL (GETINGE)	DATE (APP.)	PROJECT NUMBER
MHn	JSn	JSn	2006-01-02	

GETINGE
GETINGE DISINFECTION
P.O. BOX 1505
SE 352 15 VÄXJÖ
SWEDEN

UTENSIL WASHER TYPE 88-5 EL
CIRCUIT DIAGRAM
CABLES, PANEL CS AND SS

DRAWING NUMBER		SHEET
5027555		51
DATE	REV.	NEXT SHEET
2005-05-16	A	52

REV:	NOTE:	SIGN.	DATE:
A	PU06-0122	HS	070816

Downloaded from www.Manualslib.com manuals search engine

THIS DRAWING CONTAINS CONFIDENTIAL INFORMATION AND REMAINS THE PROPERTY OF GETINGE DISINFECTION AB WITHOUT WHOSE PERMISSION IT MAY NOT BE COPIED, SHOWN OR HANDED TO A THIRD PART OR USED AT THE BASIS OF ALTERNATE DESIGNS

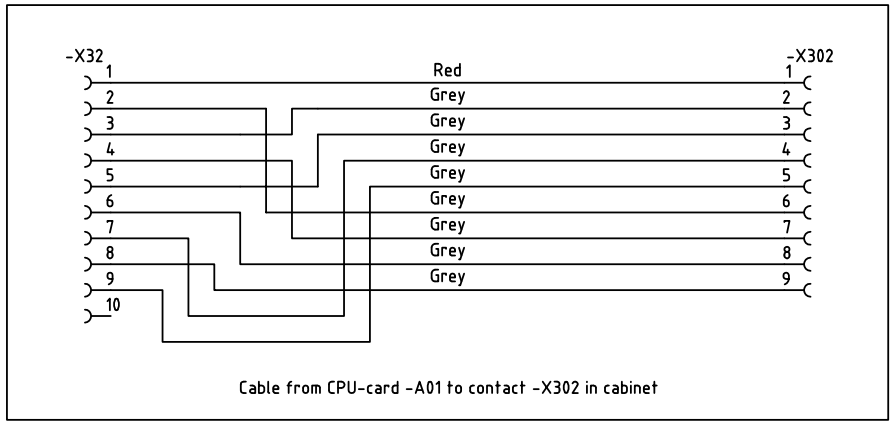

Cable from CPU-card -A01 to contact -X302 in cabinet

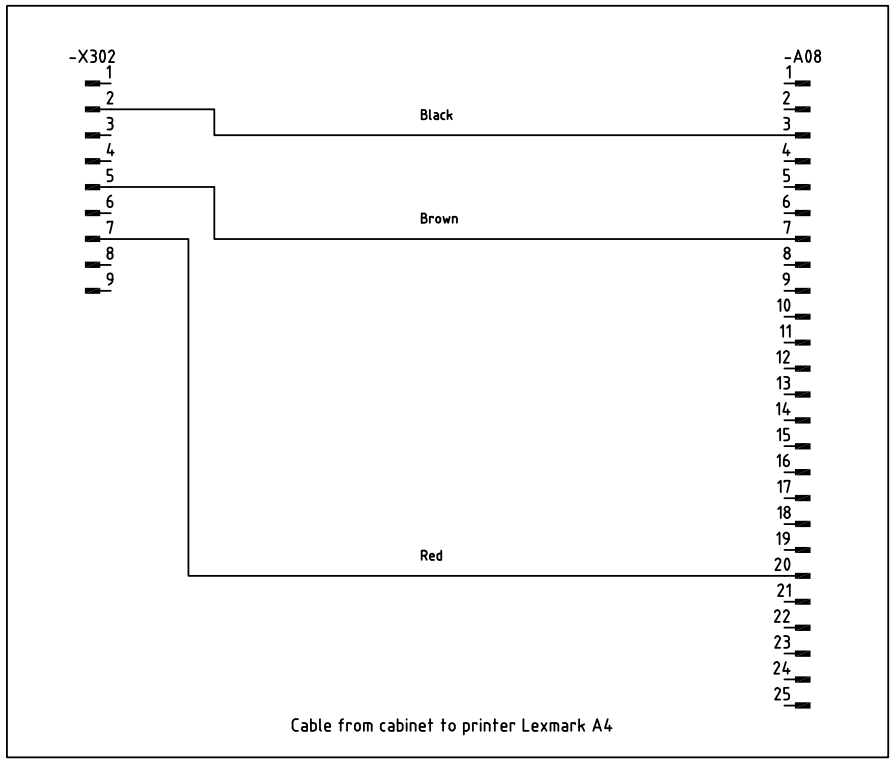

Cable from cabinet to printer Lexmark A4

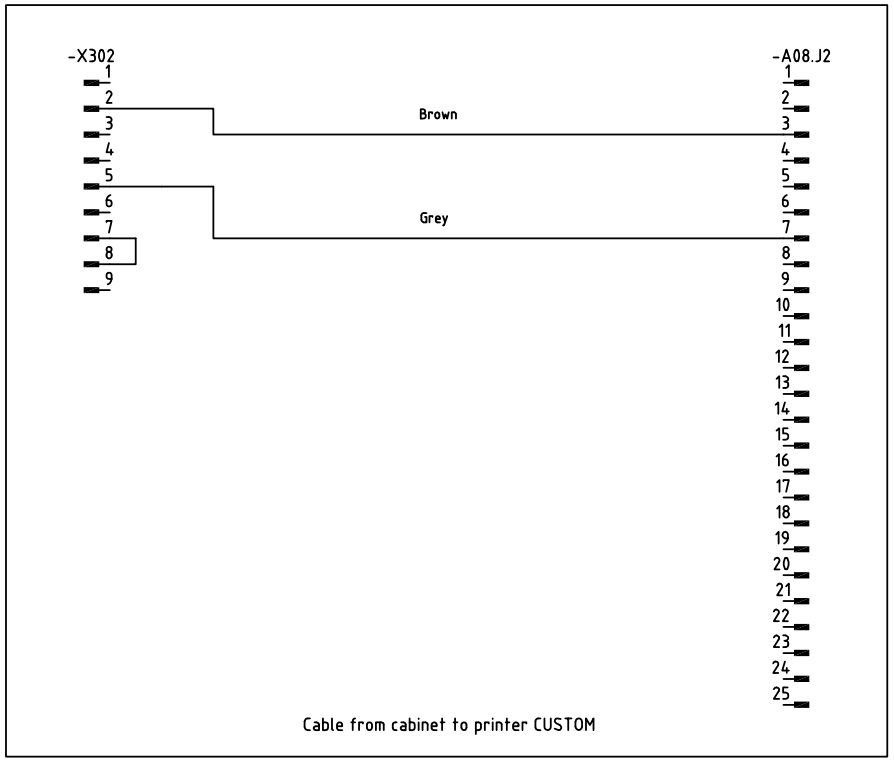

Cable from cabinet to printer CUSTOM

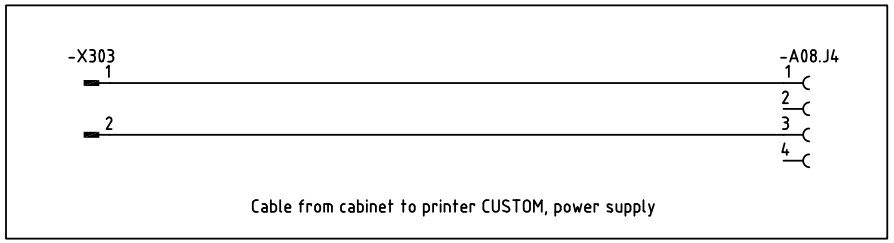

Cable from cabinet to printer CUSTOM, power supply

A	PU06-0122	HS	070816
REV:	NOTE:	SIGN.	DATE:

DRAWN BY	CHECKED BY (GETINGE)	APPROVAL (GETINGE)	DATE (APP.)
MHn	JSn	JSn	2006-01-02

GETINGE
GETINGE DISINFECTION
P.O. BOX 1505
SE 352 15 VÄXJÖ
SWEDEN

UTENSIL WASHER TYPE 88-5 EL
CIRCUIT DIAGRAM
CABLES, PRINTER

PROJECT NUMBER		
DRAWING NUMBER		SHEET
5027555		52
DATE	REV.	NEXT SHEET
2005-05-16	A	53

Downloaded from www.Manualslib.com manuals search engine

THIS DRAWING CONTAINS CONFIDENTIAL INFORMATION AND REMAINS THE PROPERTY OF GETINGE DISINFECTION AB WITHOUT WHOSE PERMISSION IT MAY NOT BE COPIED, SHOWN OR HANDED TO A THIRD PART OR USED AT THE BASIS OF ALTERNATE DESIGNS

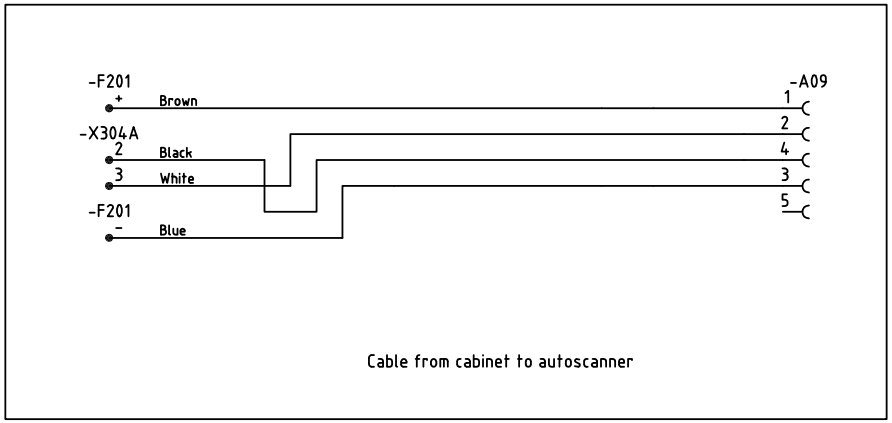

Cable from cabinet to autoscanner

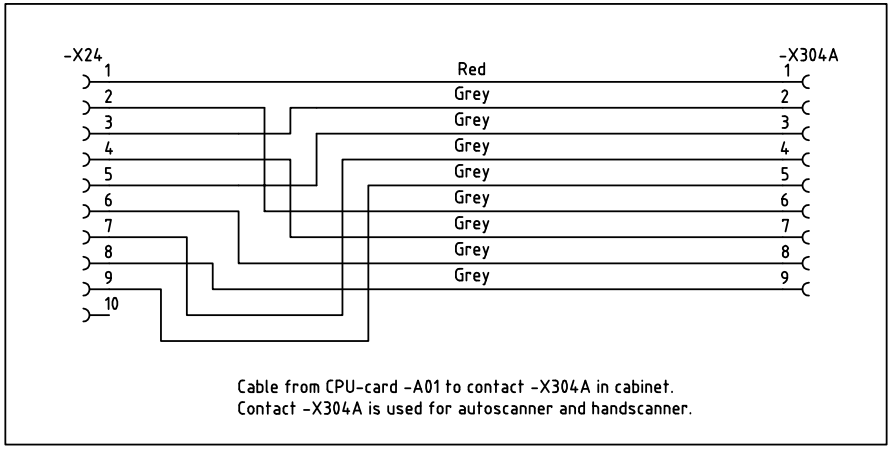

Cable from CPU-card -A01 to contact -X304A in cabinet.
Contact -X304A is used for autoscanner and handscanner.

A	PU06-0122	HS	070816
REV:	NOTE:	SIGN.	DATE:

DRAWN BY	CHECKED BY (GETINGE)	APPROVAL (GETINGE)	DATE (APP.)	PROJECT NUMBER
MHn	JSn	JSn	2006-01-02	

GETINGE
GETINGE DISINFECTION
P.O. BOX 1505
SE 352 15 VÄXJÖ
SWEDEN

UTENSIL WASHER TYPE 88-5 EL
CIRCUIT DIAGRAM
CABLES, AUTOSCANNER

DRAWING NUMBER		SHEET
5027555		53
DATE	REV.	NEXT SHEET
2005-05-16	A	54

Downloaded from www.Manualslib.com manuals search engine

THIS DRAWING CONTAINS CONFIDENTIAL INFORMATION AND REMAINS THE PROPERTY OF GETINGE DISINFECTION AB WITHOUT WHOSE PERMISSION IT MAY NOT BE COPIED, SHOWN OR HANDED TO A THIRD PART OR USED AT THE BASIS OF ALTERNATE DESIGNS

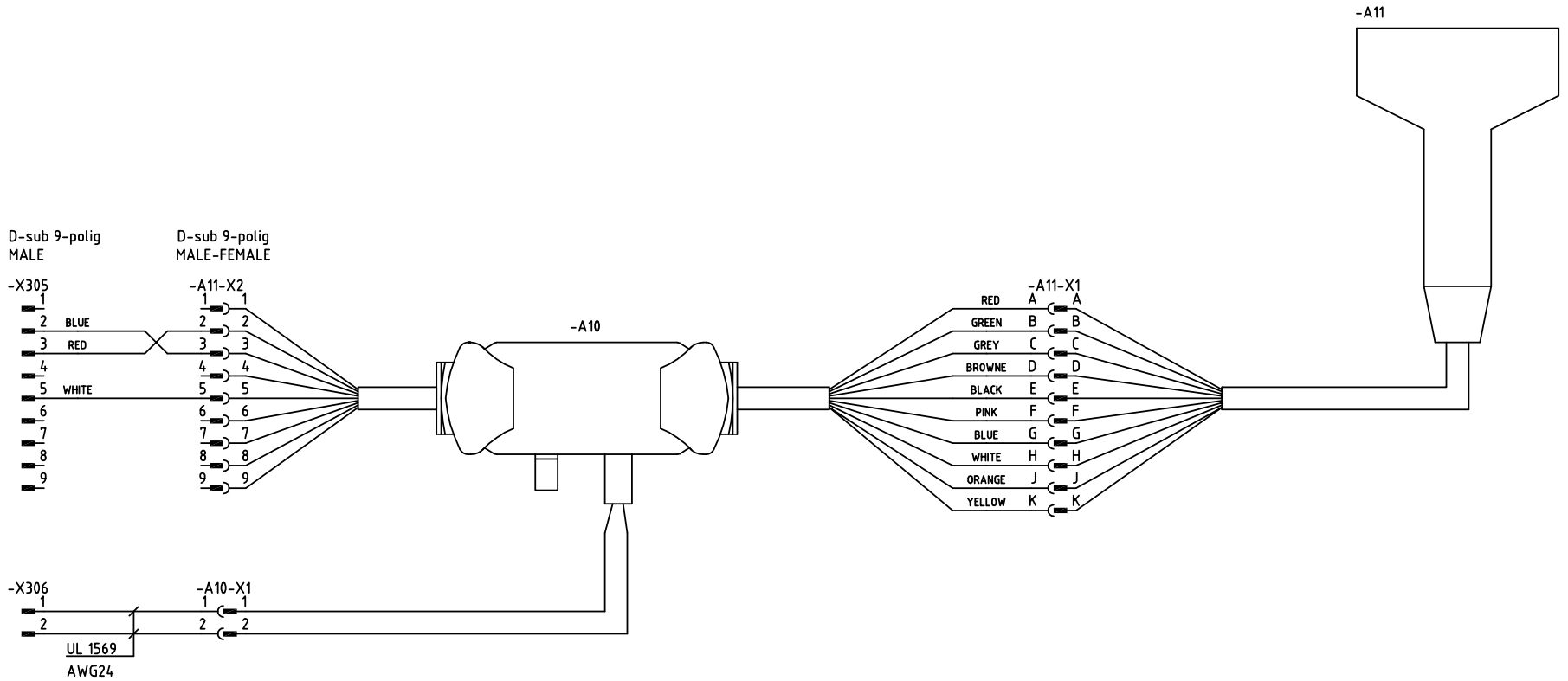

A	PU06-0122	HS	070816
REV:	NOTE:	SIGN.	DATE:

DRAWN BY	CHECKED BY (GETINGE)	APPROVAL (GETINGE)	DATE (APP.)	PROJECT NUMBER
MHn	JSn	JSn	2006-01-02	

GETINGE
GETINGE DISINFECTION
P.O. BOX 1505
SE 352 15 VAXJO
SWEDEN

UTENSIL WASHER TYPE 88-5 EL
CIRCUIT DIAGRAM
CABLE, HANDSCANNER

DRAWING NUMBER		SHEET
5027555		54
DATE	REV.	NEXT SHEET
2005-05-16	A	101

Downloaded from www.Manualslib.com manuals search engine

THIS DRAWING CONTAINS CONFIDENTIAL INFORMATION AND REMAINS THE PROPERTY OF GETINGE DISINFECTION AB WITHOUT WHOSE PERMISSION IT MAY NOT BE COPIED, SHOWN OR HANDED TO A THIRD PART OR USED AT THE BASIS OF ALTERNATE DESIGNS

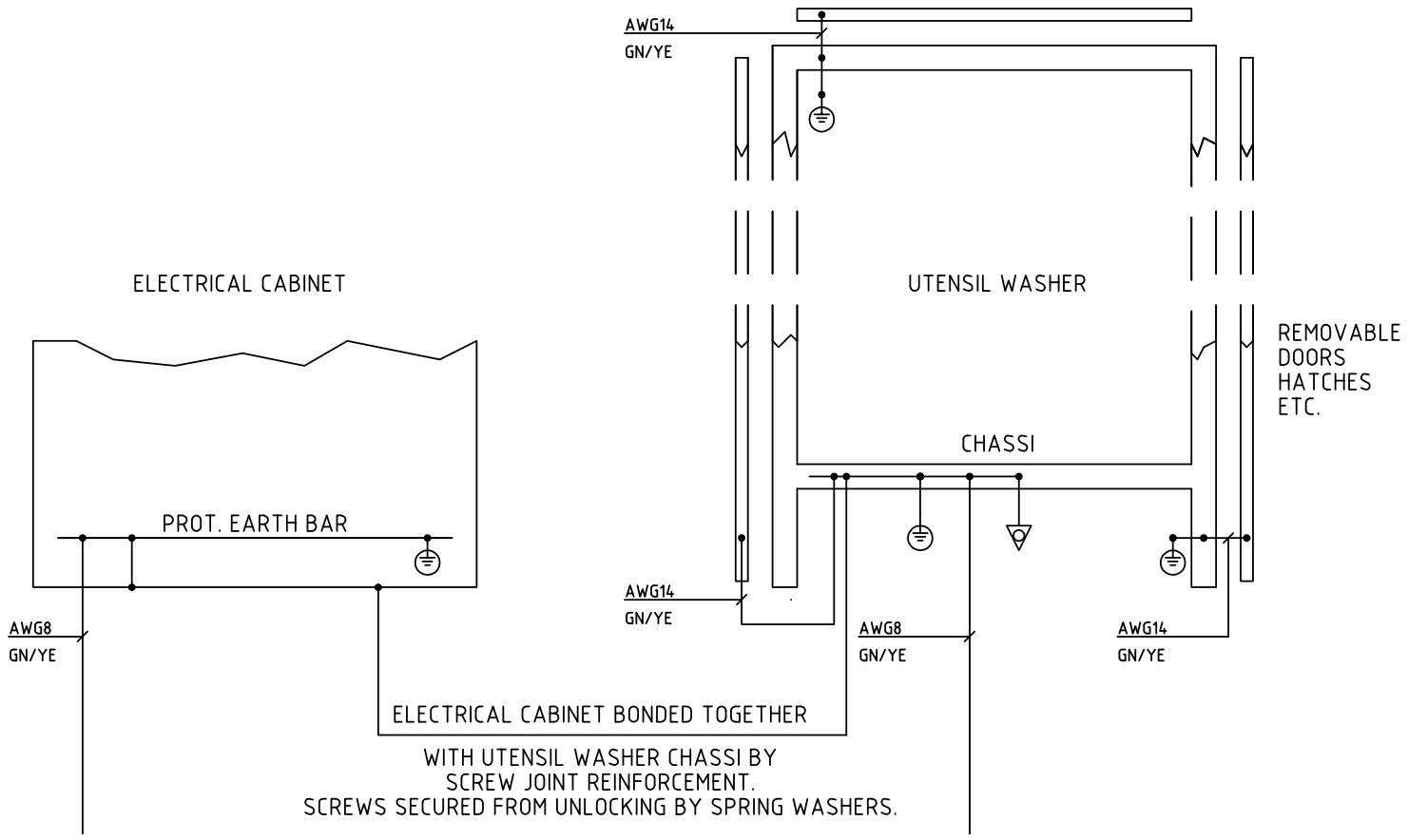

EXTERNAL PROTECTIVE EARTH CONDUCTOR
FROM POWER DISTRIBUTION

EXTERNAL EQUAL POTENTIAL BONDING CONDUCTOR
FROM EQUAL POTENTIAL BONDING BAR

ALL CONNECTIONS TO
PROTECTIVE EARTH SYSTEM
SHALL BE MARKED WITH
FOLLOWING SYMBOL

DRAWN BY	CHECKED BY (GETINGE)	APPROVAL (GETINGE)	DATE (APP.)
MHn	JSn	JSn	2006-01-02

PROJECT NUMBER

GETINGE
GETINGE DISINFECTION
P.O. BOX 1505
SE 352 15 VAXJO
SWEDEN

UTENSIL WASHER TYPE 88-5 EL
CIRCUIT DIAGRAM
PROTECTIVE BONDING CIRCUIT

DRAWING NUMBER	SHEET
5027555	101
DATE / REV.	NEXT SHEET
2005-05-16 / A	-

REV:	NOTE:	SIGN.	DATE:
A	PU06-0122	HS	060310

Downloaded from www.Manualslib.com manuals search engine

THIS DRAWING CONTAINS CONFIDENTIAL INFORMATION AND REMAINS THE PROPERTY OF GETINGE DISINFECTION AB WITHOUT WHOSE PERMISSION IT MAY NOT BE COPIED, SHOWN OR HANDED TO A THIRD PART OR USED AT THE BASIS OF ALTERNATE DESIGNS

CONTENTS OF DRAWINGS

SHEET	DESCRIPTION	REVISION	NOTE	SHEET	DESCRIPTION	REVISION	NOTE
2	ELECTRICAL CABINET LEFT SIDE	A	380-415V, 50-60Hz, 3+N+PE	28	MONITORING SYSTEM, DI08-DI15	A	
3	POWER SUPPLY, MAIN CIRCUITS	A		29	MONITORING SYSTEM, DO00-DO08	A	
4	MAIN CIRCUITS	A		30	MONITORING SYSTEM, DO09-DO17	A	
5	CONTROL VOLTAGE, 230VAC	A		51	CABLES, PANEL CS AND SS	A	
6	CONTROL VOLTAGE, 24VDC	A		52	CABLES, PRINTER	A	
7	CONTROL VOLTAGE, 5VDC	A		53	CABLES, AUTOSCANNER	A	
8	CONTROL SYSTEM, PACS300	A		54	CABLE, HANDSCANNER	A	
9	MONITORING SYSTEM, PACS300	A		55	CABLE, CPU - MON. SYS.	A	
10	MAIN BOARD, AI00-AI07	A		101	PROTECTIVE BONDING CIRCUIT	A	
11	MAIN BOARD, DI00-DI07	A					
12	MAIN BOARD, DI08-DI15	A					
13	MAIN BOARD, DO00-DO08	A					
14	MAIN BOARD, DO09-DO17	A					
15	EXPANSION CARD #1, DI16-DI21	A					
16	EXPANSION CARD #1, DO18-DO25, AO01	A					
17	EXPANSION CARD #2, DI22-DI27	A					
18	EXPANSION CARD #2, DO26-DO33, AO02	A					
19	EXPANSION CARD #3, DI28-DI33	A					
20	EXPANSION CARD #3, DO34-DO41, AO03	A					
21	EXPANSION CARD #4, DI34-DI39	A					
22	EXPANSION CARD #4, DO42-DO49, AO04	A					
23	HARDWARE INTERLOCKS	A					
24	AGS SIGNALS	A					
25	DOSING PUMPS	A					
26	MONITORING SYSTEM, AI00-AI07	A					
27	MONITORING SYSTEM, DI00-DI07	A					

DRAWN BY	CHECKED BY (GETINGE)	APPROVAL (GETINGE)	DATE (APP.)	PROJECT NUMBER
MHn	JSn	JSn	2006-01-02	

GETINGE
GETINGE DISINFECTION
P.O. BOX 1505
SE 352 15 VAXJO
SWEDEN

UTENSIL WASHER TYPE 88-5 EL
CIRCUIT DIAGRAM, MON. SYSTEM
CONTENTS OF DRAWINGS

DRAWING NUMBER	SHEET
5027556	1
DATE / REV.	NEXT SHEET
2005-05-16 / A	2

REV:	NOTE:	SIGN.	DATE:
A	PU06-0122	HS	070816

Downloaded from www.Manualslib.com manuals search engine

THIS DRAWING CONTAINS CONFIDENTIAL INFORMATION AND REMAINS THE PROPERTY OF GETINGE DISINFECTION AB WITHOUT WHOSE PERMISSION IT MAY NOT BE COPIED, SHOWN OR HANDED TO A THIRD PART OR USED AT THE BASIS OF ALTERNATE DESIGNS

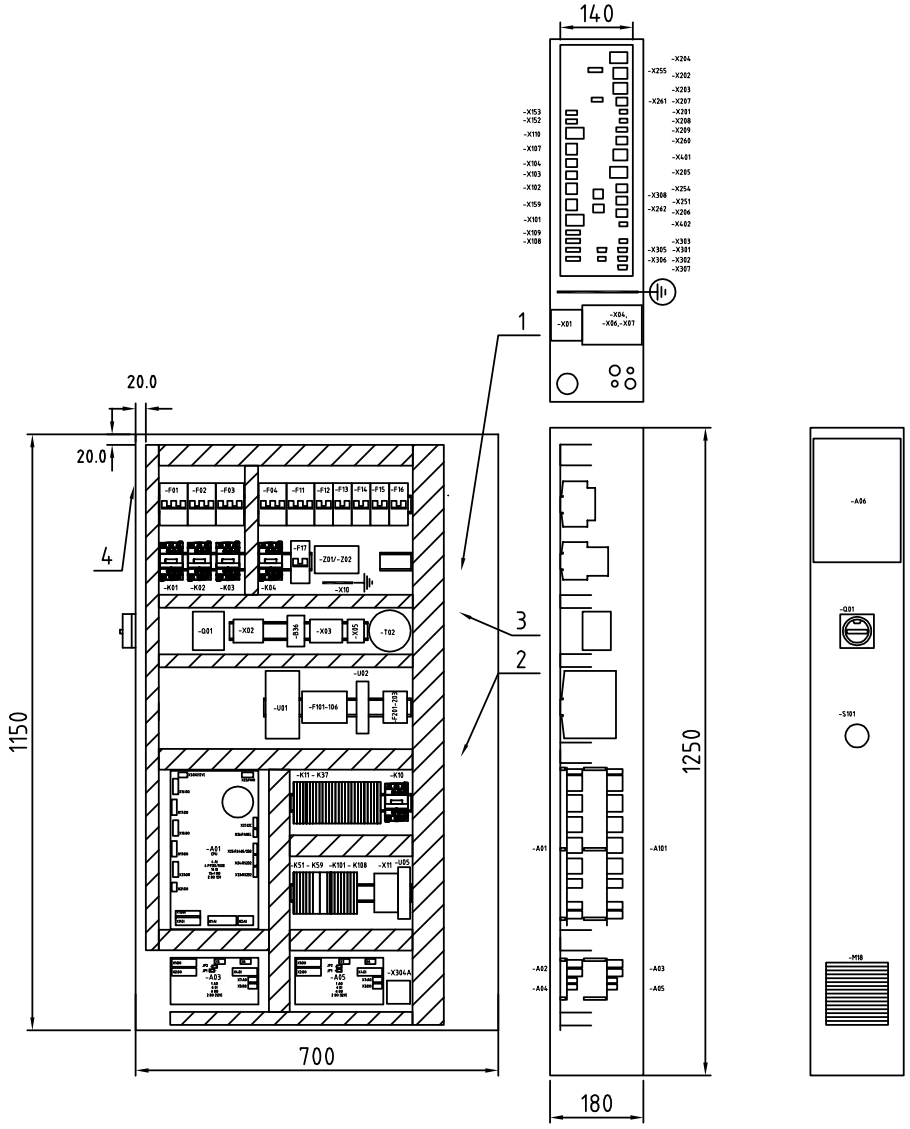

FOLLOWING COMPONENTS ARE OPTIONS:

-U02
-U05

WIRES USED IN MACHINE:

ACCORDING TO UL STYLE 1015, 600V 105C.
IF OTHER TYPE OF WIRE IS USED THIS IS SPECIFIED IN THE WIRING DIAGRAMS.

1) Connection point for power circuit.

2) Connection point for control voltage.

3) Label with fuse terminal description (5024156-00).

4) Label with manufacturers approval of electrical cabinet.

DRAWN BY	CHECKED BY (GETINGE)	APPROVAL (GETINGE)	DATE (APP.)	PROJECT NUMBER
MHn	JSn	JSn	2006-01-02	

GETINGE
GETINGE DISINFECTION
P.O. BOX 1505
SE 352 15 VAXJO
SWEDEN

UTENSIL WASHER TYPE 88-5 EL
ELECTRICAL CABINET LEFT SIDE
STEAM HEATED

DRAWING NUMBER	SHEET
5027556	2
DATE / REV.	NEXT SHEET
2005-05-16 / A	3

REV:	NOTE:	SIGN.	DATE:
A	PU06-0122	HS	070816

Downloaded from www.Manualslib.com manuals search engine

THIS DRAWING CONTAINS CONFIDENTIAL INFORMATION AND REMAINS THE PROPERTY OF GETINGE DISINFECTION AB WITHOUT WHOSE PERMISSION IT MAY NOT BE COPIED, SHOWN OR HANDED TO A THIRD PART OR USED AT THE BASIS OF ALTERNATE DESIGNS

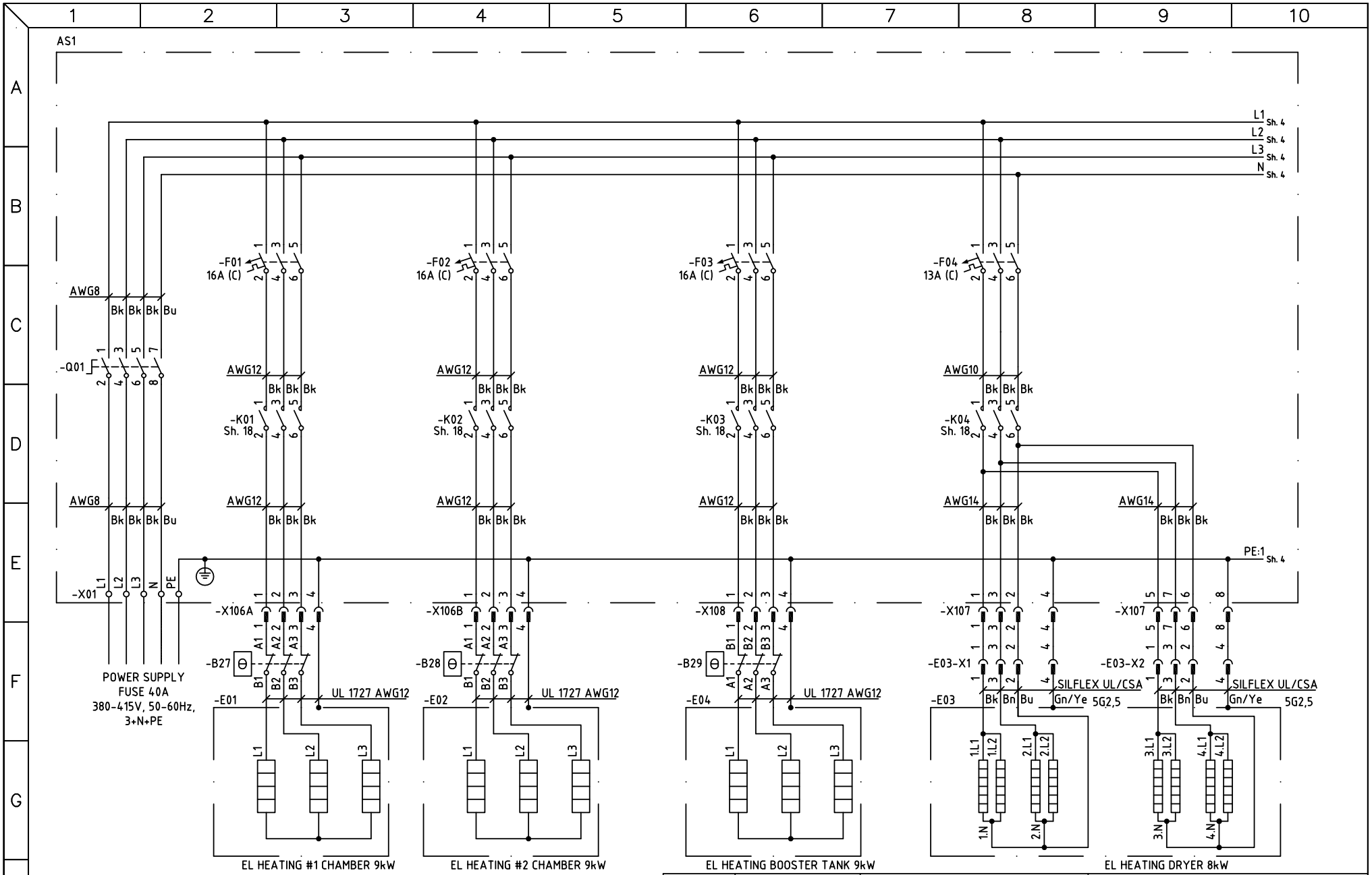

DRAWN BY	CHECKED BY (GETINGE)	APPROVAL (GETINGE)	DATE (APP.)	PROJECT NUMBER
MHn	JSn	JSn	2006-01-02	

GETINGE
GETINGE DISINFECTION
P.O. BOX 1505
SE 352 15 VÄXJÖ
SWEDEN

UTENSIL WASHER TYPE 88-5 EL
CIRCUIT DIAGRAM, MON. SYSTEM
MAIN CIRCUIT

DRAWING NUMBER	SHEET
5027556	3
DATE / REV.	NEXT SHEET
2005-05-16 / A	4

REV:	NOTE:	SIGN.	DATE:
A	PU06-0122	HS	070816

Downloaded from www.Manualslib.com manuals search engine

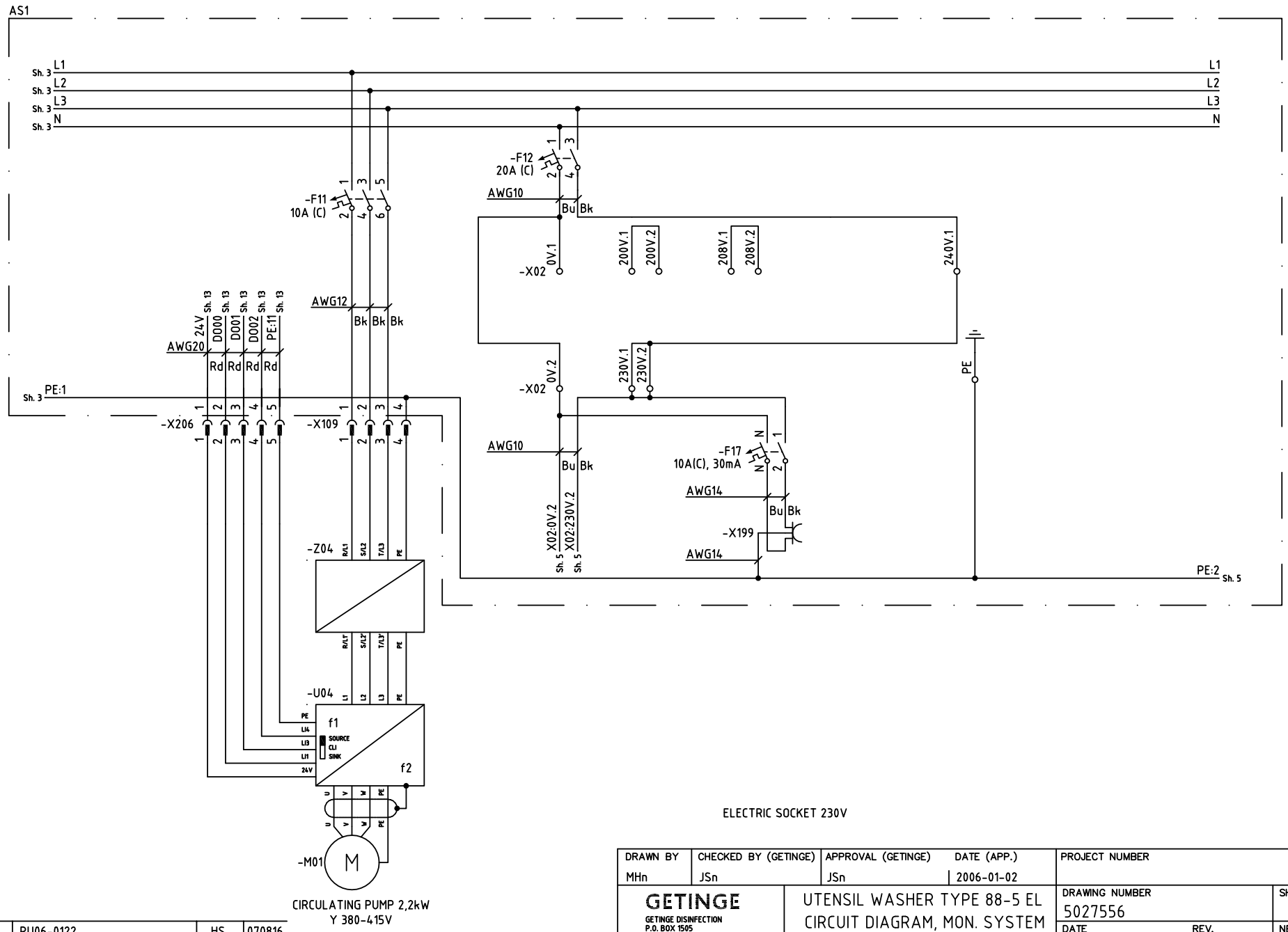

DRAWN BY	CHECKED BY (GETINGE)	APPROVAL (GETINGE)	DATE (APP.)	PROJECT NUMBER
MHn	JSn	JSn	2006-01-02	

GETINGE
GETINGE DISINFECTION
P.O. BOX 1505
SE 352 15 VAXJO
SWEDEN

UTENSIL WASHER TYPE 88-5 EL
CIRCUIT DIAGRAM, MON. SYSTEM
MAIN CIRCUIT

DRAWING NUMBER	SHEET
5027556	4
DATE / REV.	NEXT SHEET
2005-05-16 / A	5

REV:	NOTE:	SIGN.	DATE:
A	PU06-0122	HS	070816

Downloaded from www.Manualslib.com manuals search engine

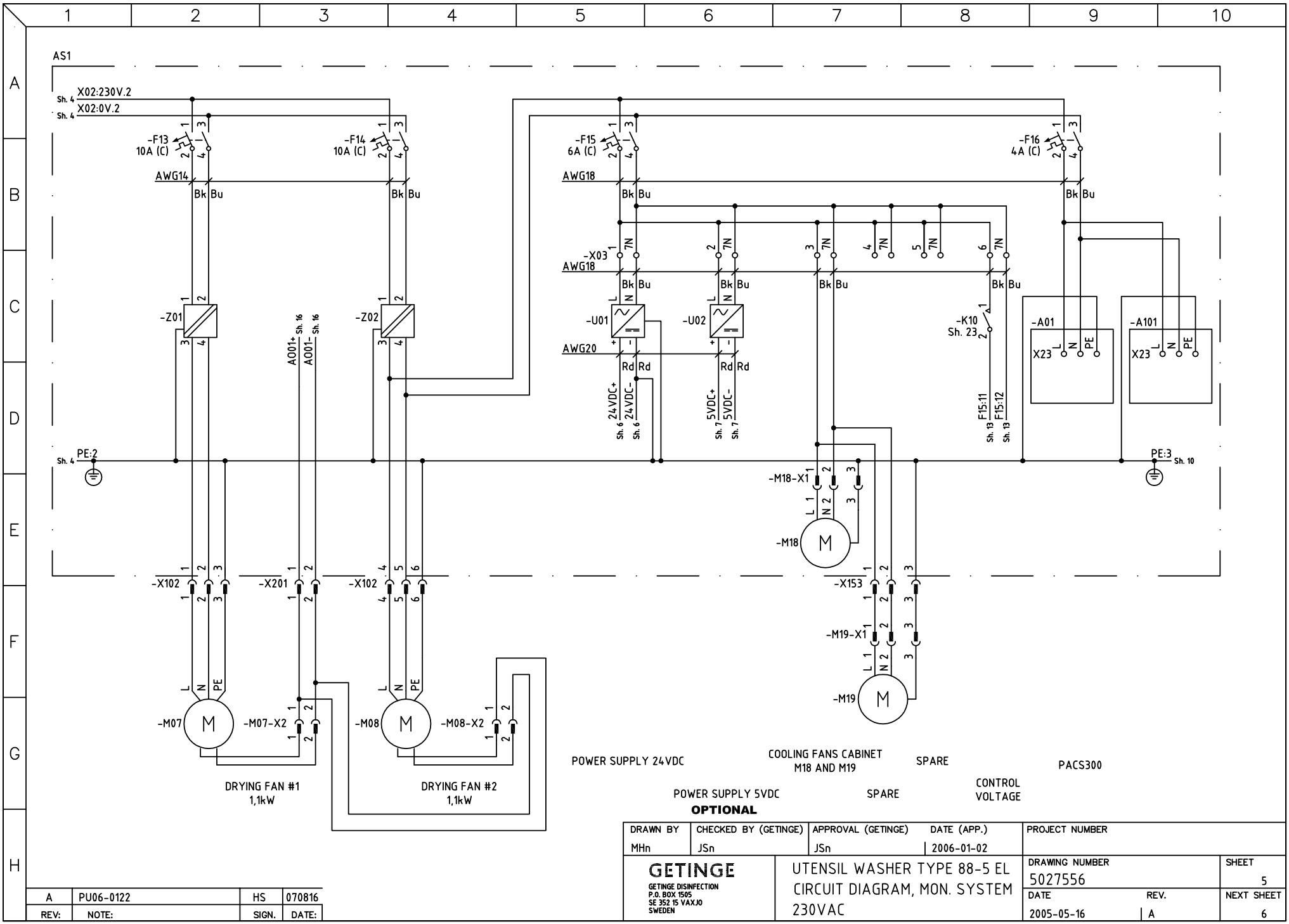

DRAWN BY	CHECKED BY (GETINGE)	APPROVAL (GETINGE)	DATE (APP.)	PROJECT NUMBER
MHn	JSn	JSn	2006-01-02	

GETINGE
GETINGE DISINFECTION
P.O. BOX 1505
SE 352 15 VAXJO
SWEDEN

UTENSIL WASHER TYPE 88-5 EL
CIRCUIT DIAGRAM, MON. SYSTEM
230VAC

DRAWING NUMBER	SHEET
5027556	5
DATE / REV.	NEXT SHEET
2005-05-16 / A	6

REV:	NOTE:	SIGN.	DATE:
A	PU06-0122	HS	070816

Downloaded from www.Manualslib.com manuals search engine

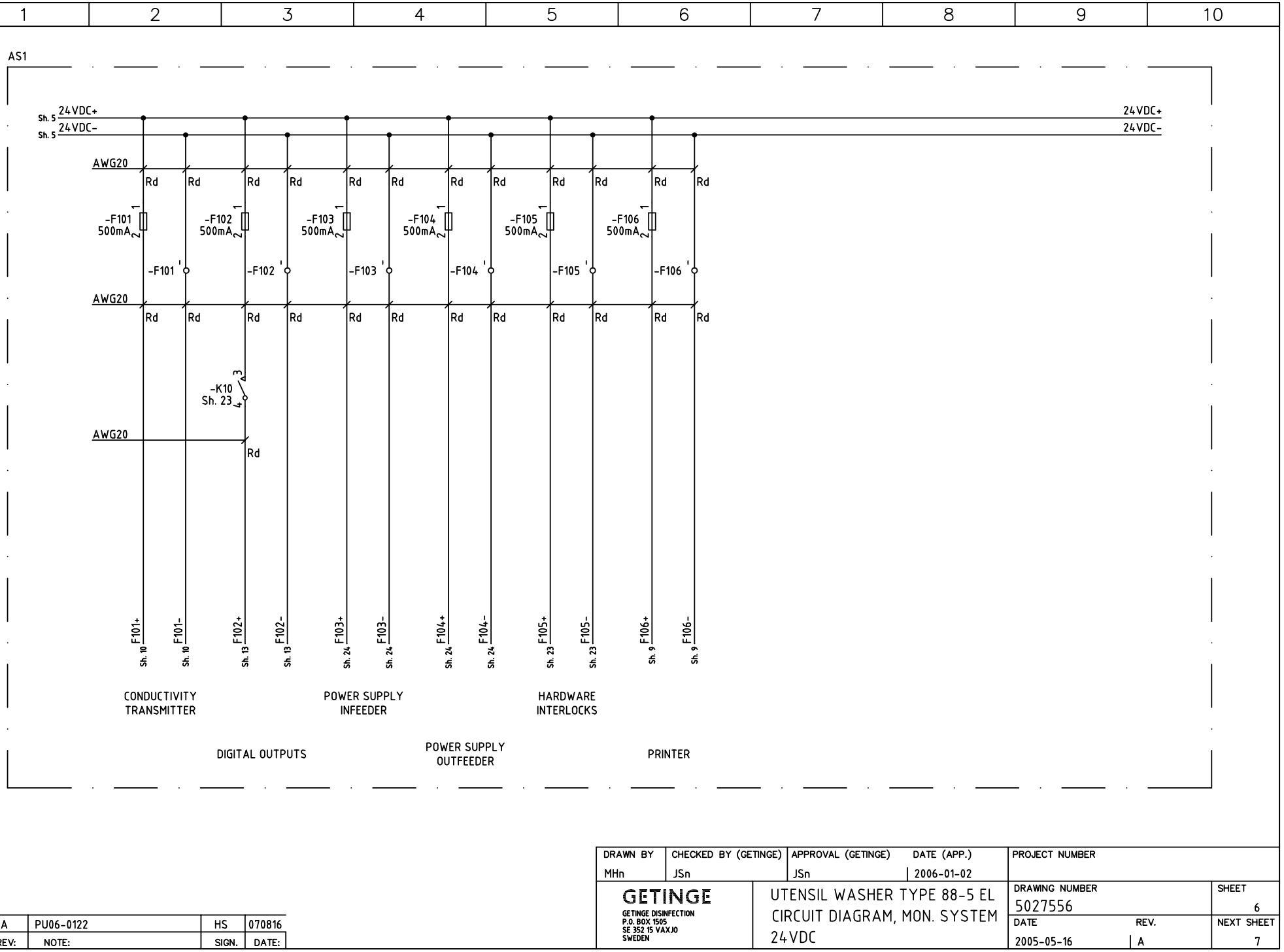

A	PU06-0122	HS	070816
REV:	NOTE:	SIGN.	DATE:

DRAWN BY	CHECKED BY (GETINGE)	APPROVAL (GETINGE)	DATE (APP.)	PROJECT NUMBER
MHn	JSn	JSn	2006-01-02	

GETINGE
GETINGE DISINFECTION
P.O. BOX 1505
SE 352 15 VAXJO
SWEDEN

UTENSIL WASHER TYPE 88-5 EL
CIRCUIT DIAGRAM, MON. SYSTEM
24VDC

DRAWING NUMBER	SHEET
5027556	6
DATE / REV.	NEXT SHEET
2005-05-16 / A	7

Downloaded from www.Manualslib.com manuals search engine

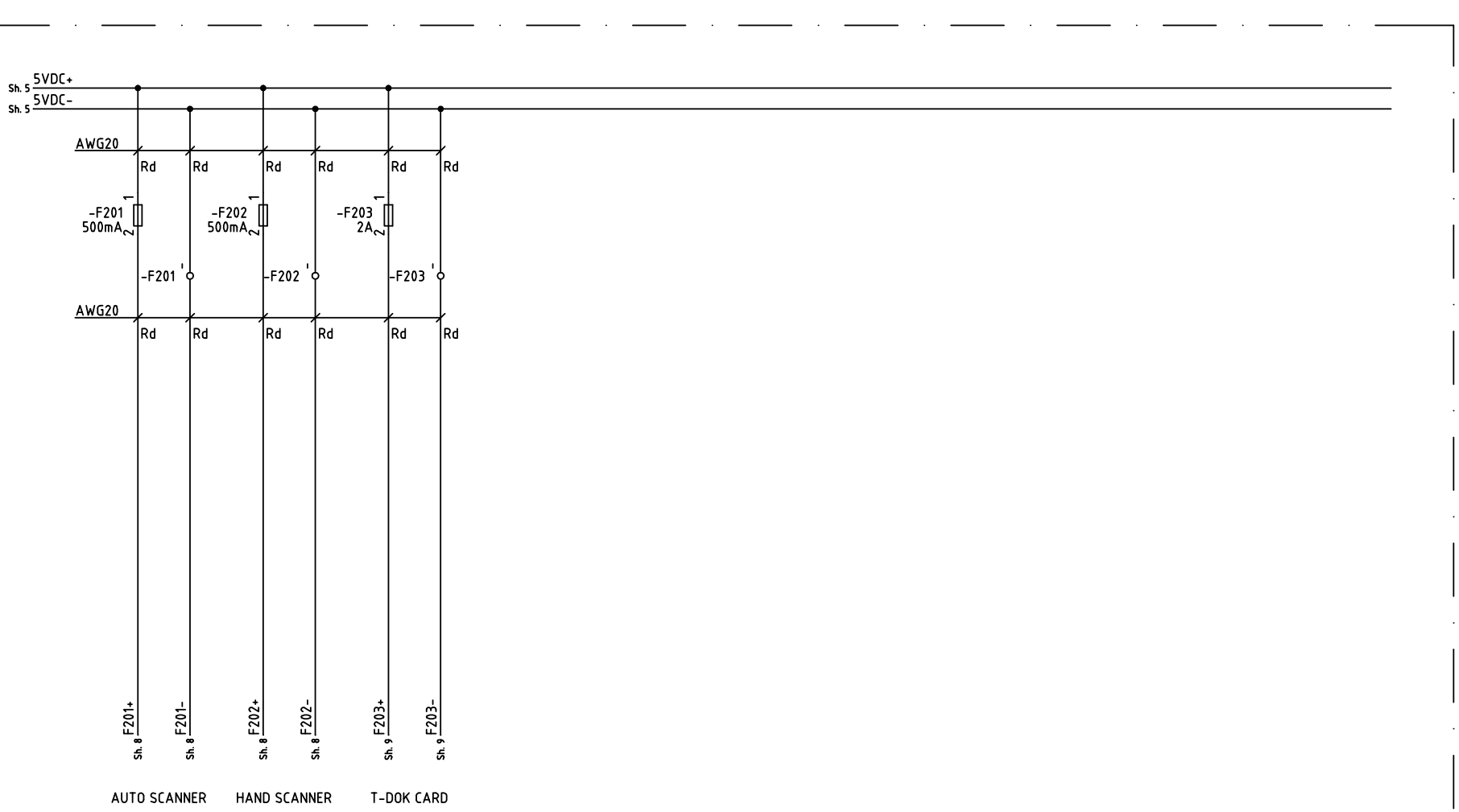

DRAWN BY	CHECKED BY (GETINGE)	APPROVAL (GETINGE)	DATE (APP.)	PROJECT NUMBER
MHn	JSn	JSn	2006-01-02	

GETINGE
GETINGE DISINFECTION
P.O. BOX 1505
SE 352 15 VAXJO
SWEDEN

UTENSIL WASHER TYPE 88-5 EL
CIRCUIT DIAGRAM, MON. SYSTEM
5VDC

DRAWING NUMBER	SHEET
5027556	7
DATE / REV.	NEXT SHEET
2005-05-16 / A	8

REV:	NOTE:	SIGN.	DATE:
A	PU06-0122	HS	070816

Downloaded from www.Manualslib.com manuals search engine

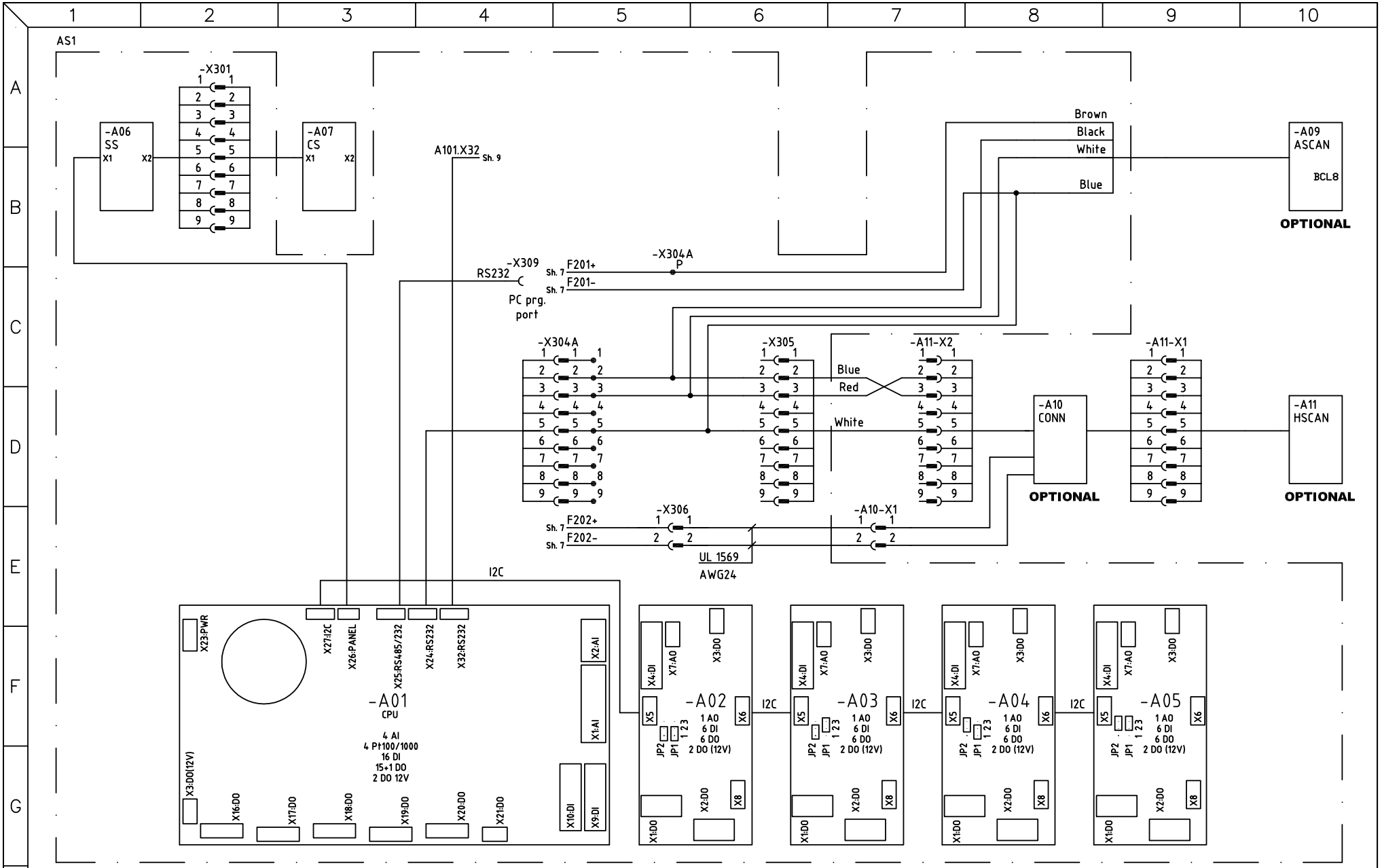

DRAWN BY	CHECKED BY (GETINGE)	APPROVAL (GETINGE)	DATE (APP.)	PROJECT NUMBER
MHn	JSn	JSn	2006-01-02	

GETINGE
GETINGE DISINFECTION
P.O. BOX 1505
SE 352 15 VAXJO
SWEDEN

UTENSIL WASHER TYPE 88-5 EL
CIRCUIT DIAGRAM, MON. SYSTEM
PACS300

DRAWING NUMBER	SHEET
5027556	8
DATE / REV.	NEXT SHEET
2005-05-16 / A	9

A	PU06-0122	HS	070816
REV:	NOTE:	SIGN.	DATE:

Downloaded from www.Manualslib.com manuals search engine

THIS DRAWING CONTAINS CONFIDENTIAL INFORMATION AND REMAINS THE PROPERTY OF GETINGE DISINFECTION AB WITHOUT WHOSE PERMISSION IT MAY NOT BE COPIED, SHOWN OR HANDED TO A THIRD PART OR USED AT THE BASIS OF ALTERNATE DESIGNS

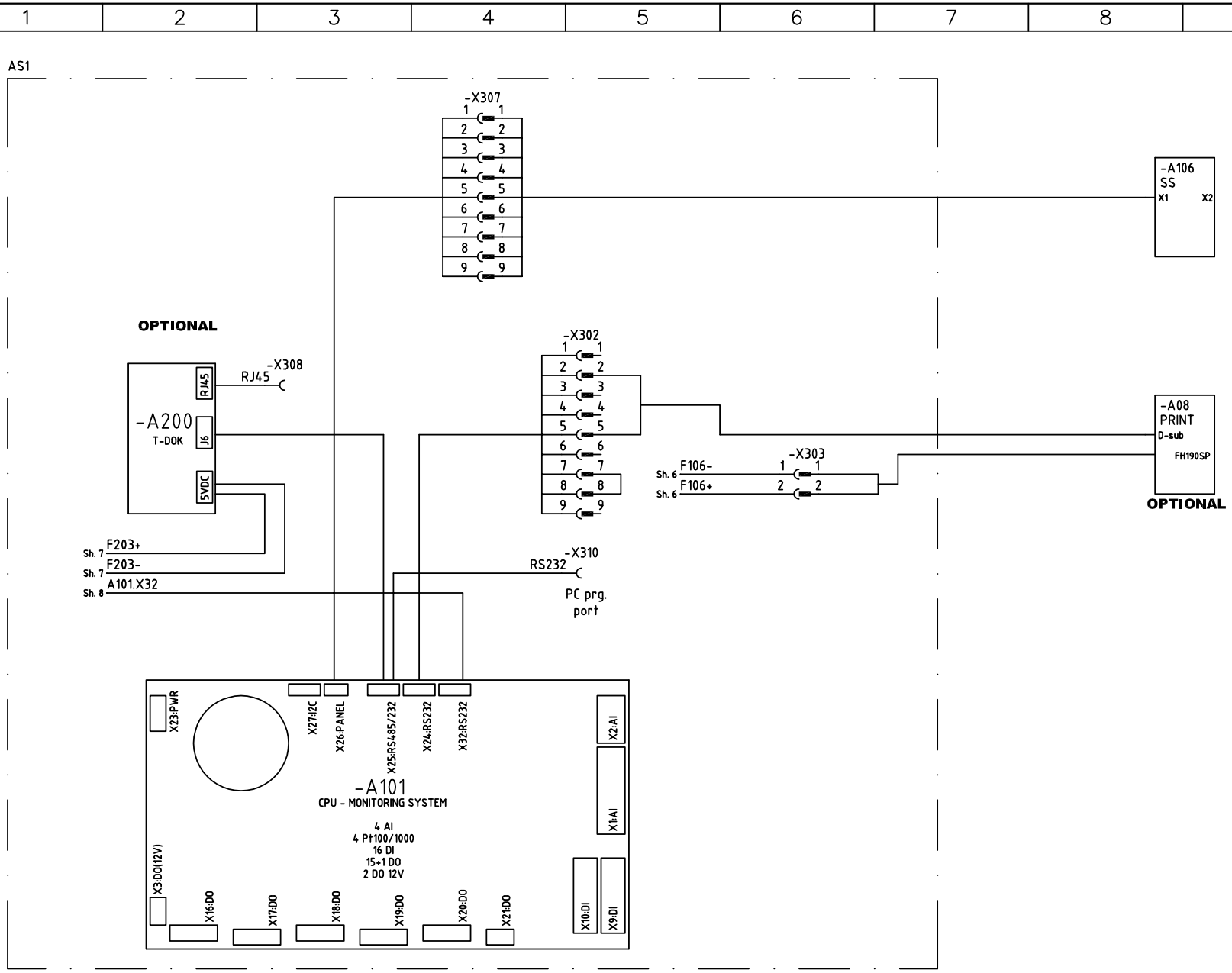

DRAWN BY	CHECKED BY (GETINGE)	APPROVAL (GETINGE)	DATE (APP.)	PROJECT NUMBER
MHn	JSn	JSn	2006-01-02	

GETINGE
GETINGE DISINFECTION
P.O. BOX 1505
SE 352 15 VÄXJÖ
SWEDEN

UTENSIL WASHER TYPE 88-5 EL
CIRCUIT DIAGRAM, MON. SYSTEM
PACS300

DRAWING NUMBER	SHEET
5027556	9
DATE / REV.	NEXT SHEET
2005-05-16 / A	10

REV:	NOTE:	SIGN.	DATE:
A	PU06-0122	HS	070816

Downloaded from www.Manualslib.com manuals search engine

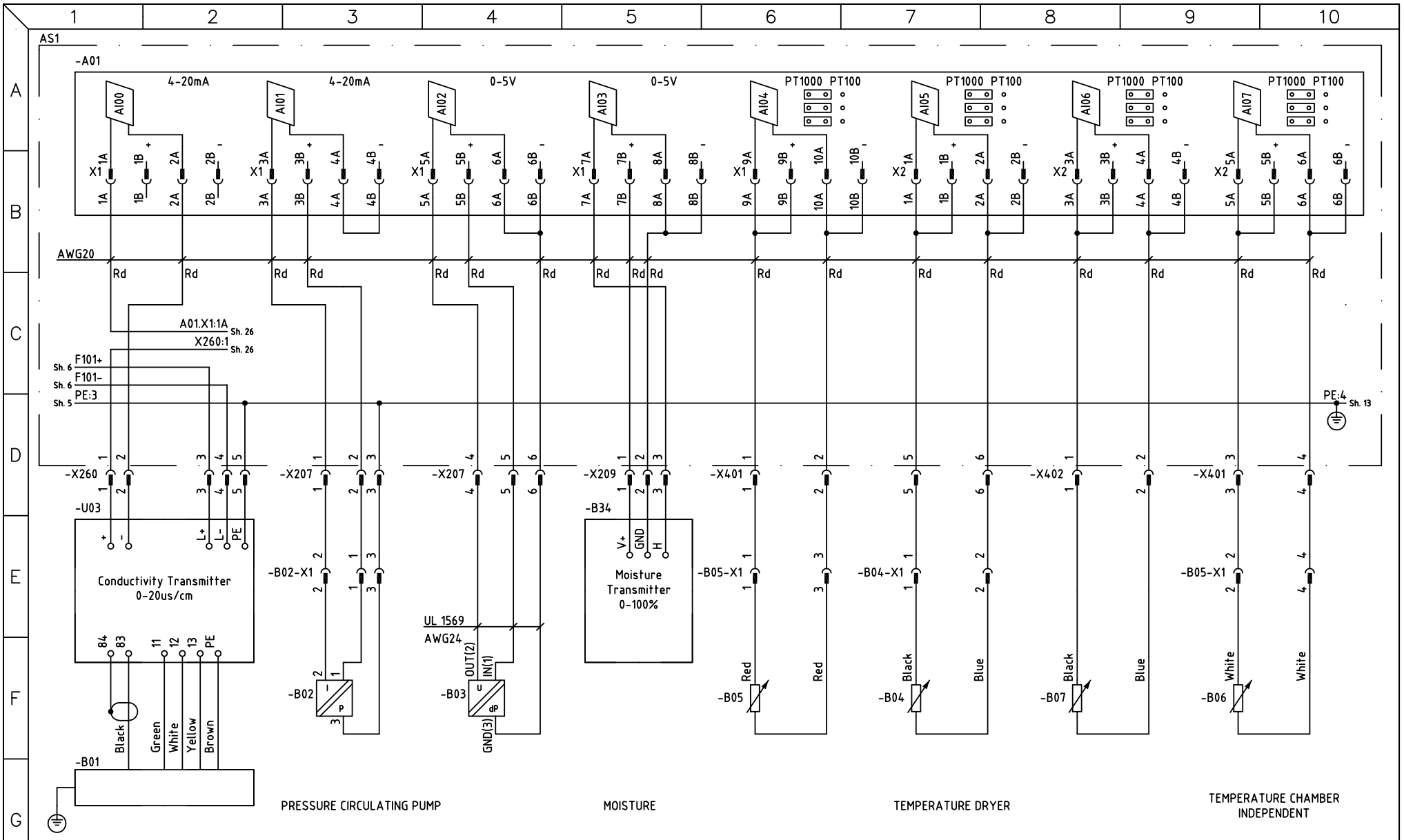

DRAWN BY	CHECKED BY (GETINGE)	APPROVAL (GETINGE)	DATE (APP.)	PROJECT NUMBER
MHn	JSn	JSn	2006-01-02	

GETINGE
GETINGE DISINFECTION
P.O. BOX 1505
SE 352 15 VAXJO
SWEDEN

UTENSIL WASHER TYPE 88-5 EL
CIRCUIT DIAGRAM, MON. SYSTEM
AI00-AI07

DRAWING NUMBER	SHEET
5027556	10
DATE / REV.	NEXT SHEET
2005-05-16 / A	11

A	PU06-0122	HS	070816
REV:	NOTE:	SIGN.	DATE:

Downloaded from www.Manualslib.com manuals search engine

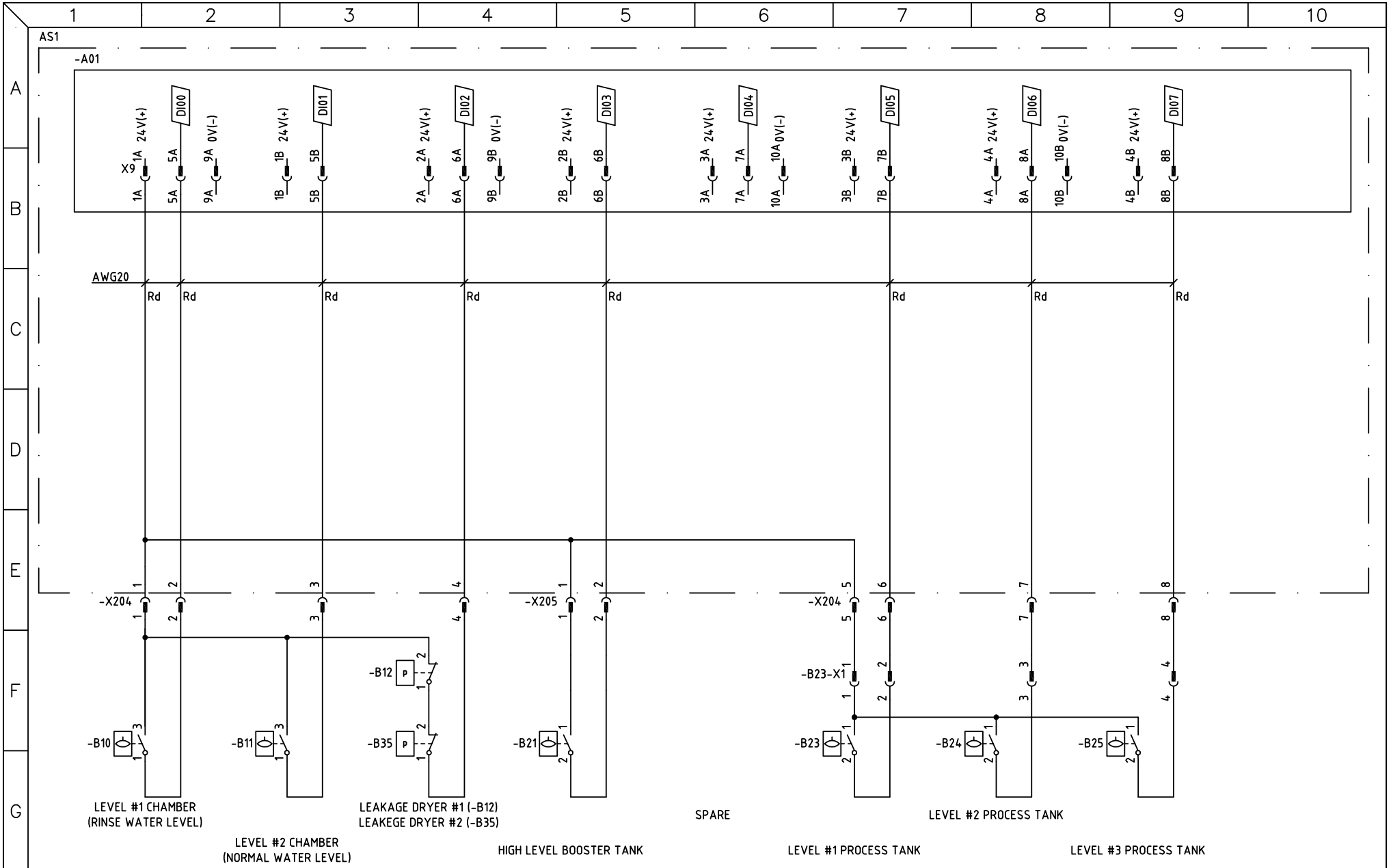

DRAWN BY	CHECKED BY (GETINGE)	APPROVAL (GETINGE)	DATE (APP.)	PROJECT NUMBER
MHn	JSn	JSn	2006-01-02	

GETINGE
GETINGE DISINFECTION
P.O. BOX 1505
SE 352 15 VAXJO
SWEDEN

UTENSIL WASHER TYPE 88-5 EL
CIRCUIT DIAGRAM, MON. SYSTEM
DI00-DI07

DRAWING NUMBER	SHEET
5027556	11
DATE / REV.	NEXT SHEET
2005-05-16 / A	12

REV:	NOTE:	SIGN.	DATE:
A	PU06-0122	HS	070816

Downloaded from www.Manualslib.com manuals search engine

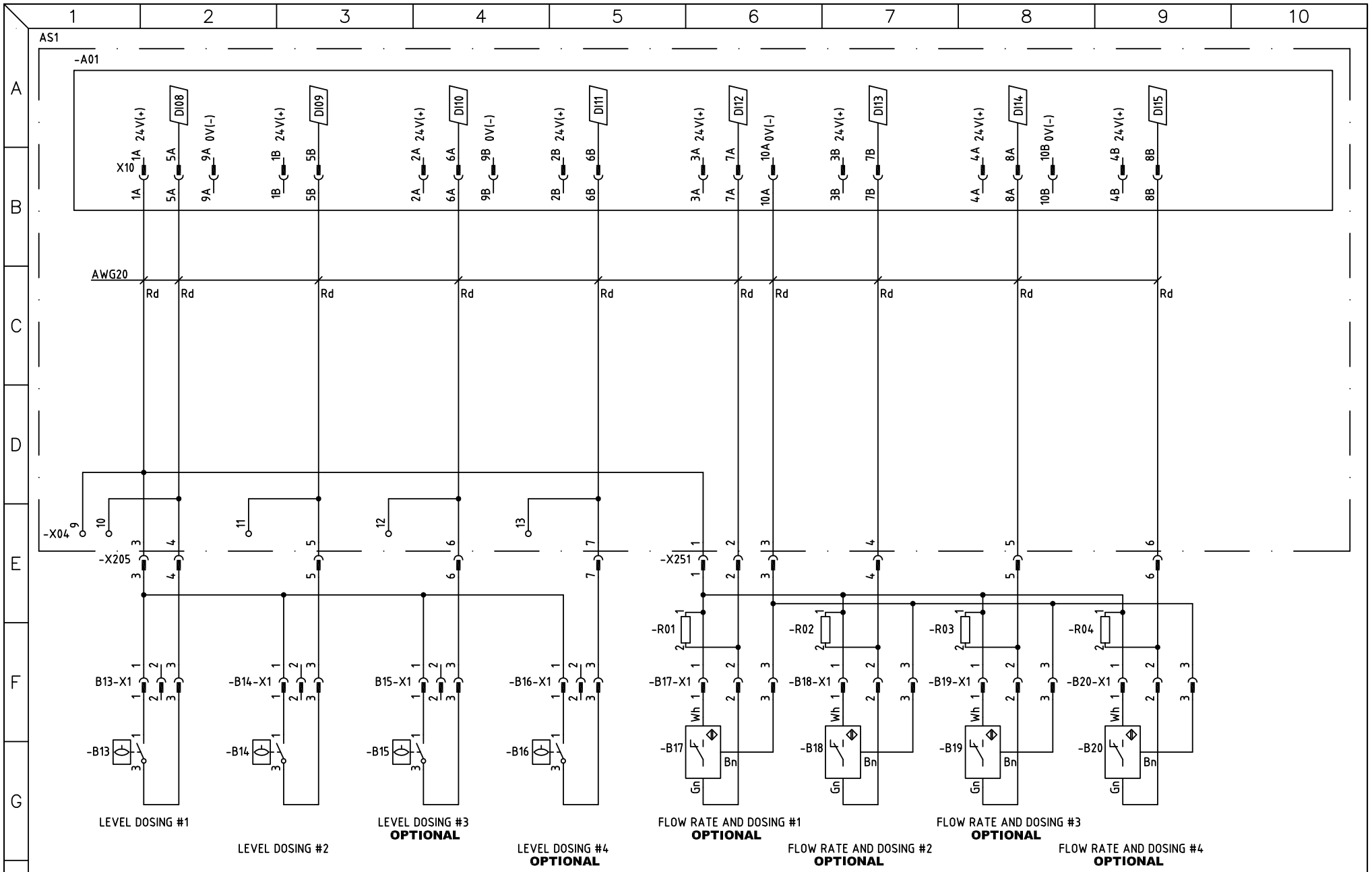

DRAWN BY	CHECKED BY (GETINGE)	APPROVAL (GETINGE)	DATE (APP.)	PROJECT NUMBER
MHn	JSn	JSn	2006-01-02	

GETINGE
GETINGE DISINFECTION
P.O. BOX 1505
SE 352 15 VAXJO
SWEDEN

UTENSIL WASHER TYPE 88-5 EL
CIRCUIT DIAGRAM, MON. SYSTEM
DI08-DI15

DRAWING NUMBER	SHEET
5027556	12
DATE / REV.	NEXT SHEET
2005-05-16 / A	13

A	PU06-0122	HS	070816
REV:	NOTE:	SIGN.	DATE:

Downloaded from www.Manualslib.com manuals search engine

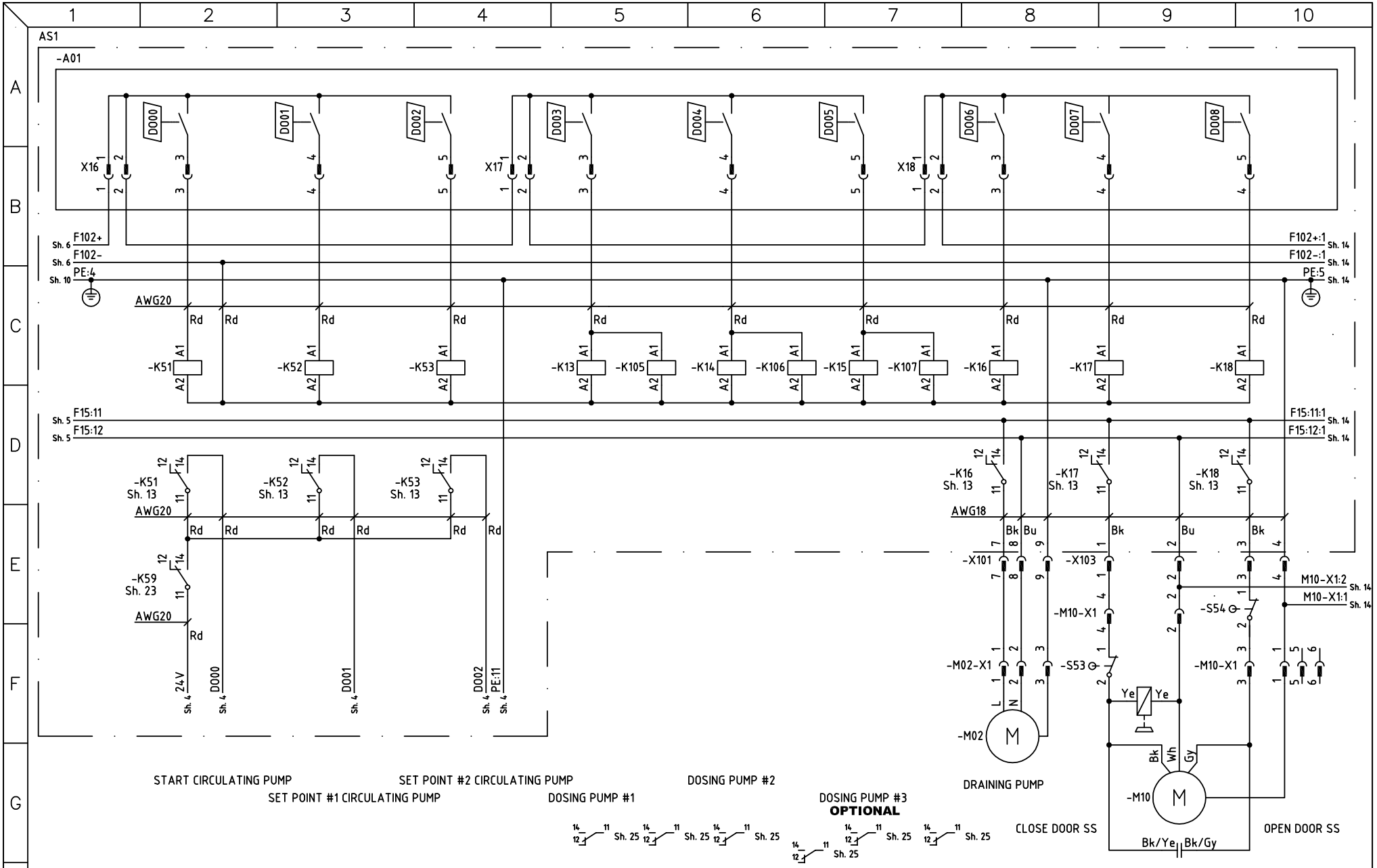

DRAWN BY	CHECKED BY (GETINGE)	APPROVAL (GETINGE)	DATE (APP.)	PROJECT NUMBER
MHn	JSn	JSn	2006-01-02	

GETINGE
GETINGE DISINFECTION
P.O. BOX 1505
SE 352 15 VAXJO
SWEDEN

UTENSIL WASHER TYPE 88-5 EL
CIRCUIT DIAGRAM, MON. SYSTEM
DO00-DO08

DRAWING NUMBER	SHEET
5027556	13
DATE / REV.	NEXT SHEET
2005-05-16 / A	14

A	PU06-0122	HS	070816
REV:	NOTE:	SIGN.	DATE:

Downloaded from www.Manualslib.com manuals search engine

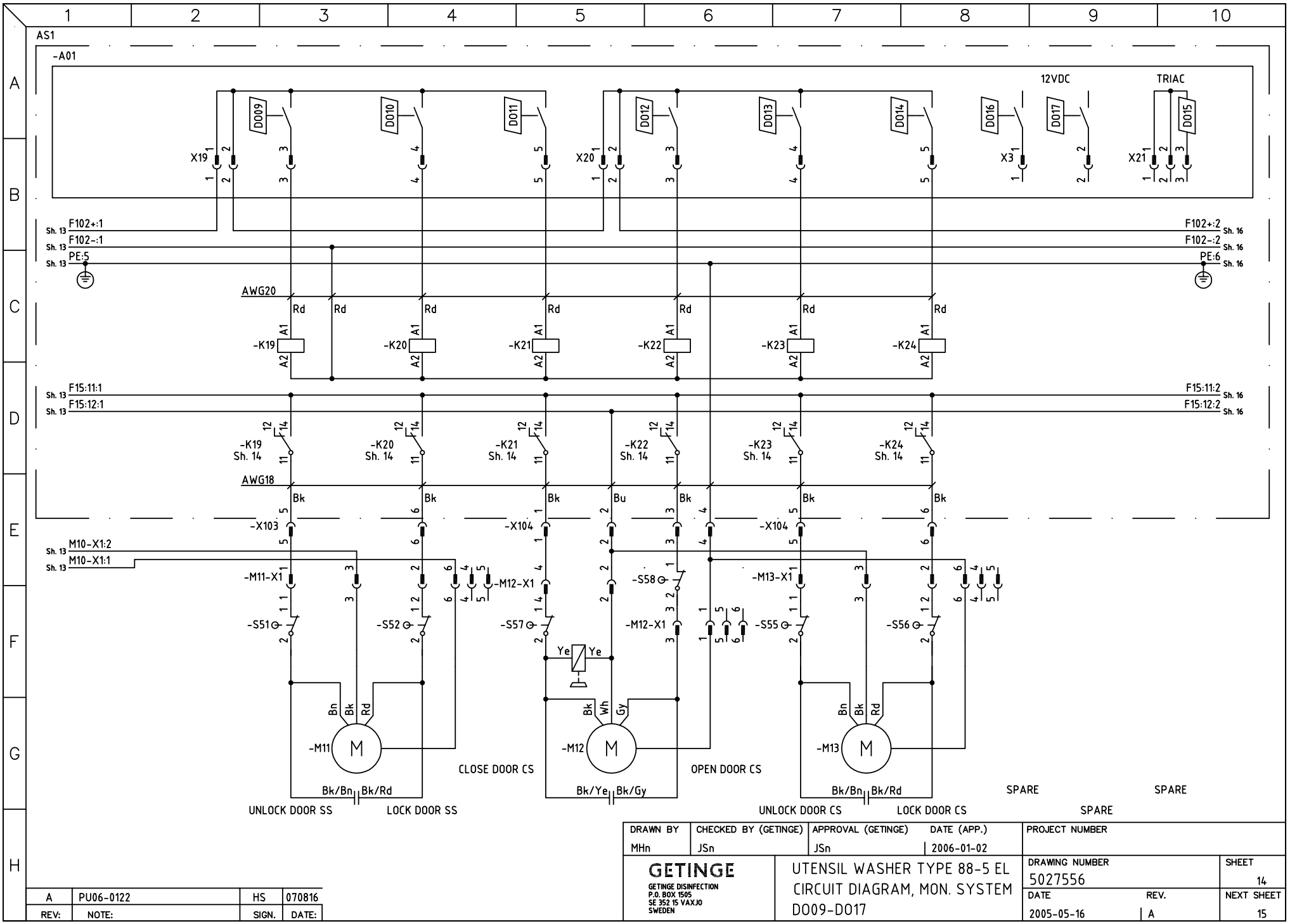

DRAWN BY	CHECKED BY (GETINGE)	APPROVAL (GETINGE)	DATE (APP.)	PROJECT NUMBER
MHn	JSn	JSn	2006-01-02	

GETINGE
GETINGE DISINFECTION
P.O. BOX 1505
SE 352 15 VAXJO
SWEDEN

UTENSIL WASHER TYPE 88-5 EL
CIRCUIT DIAGRAM, MON. SYSTEM
D009-D017

DRAWING NUMBER	SHEET
5027556	14
DATE / REV.	NEXT SHEET
2005-05-16 / A	15

A	PU06-0122	HS	070816
REV:	NOTE:	SIGN.	DATE:

Downloaded from www.Manualslib.com manuals search engine

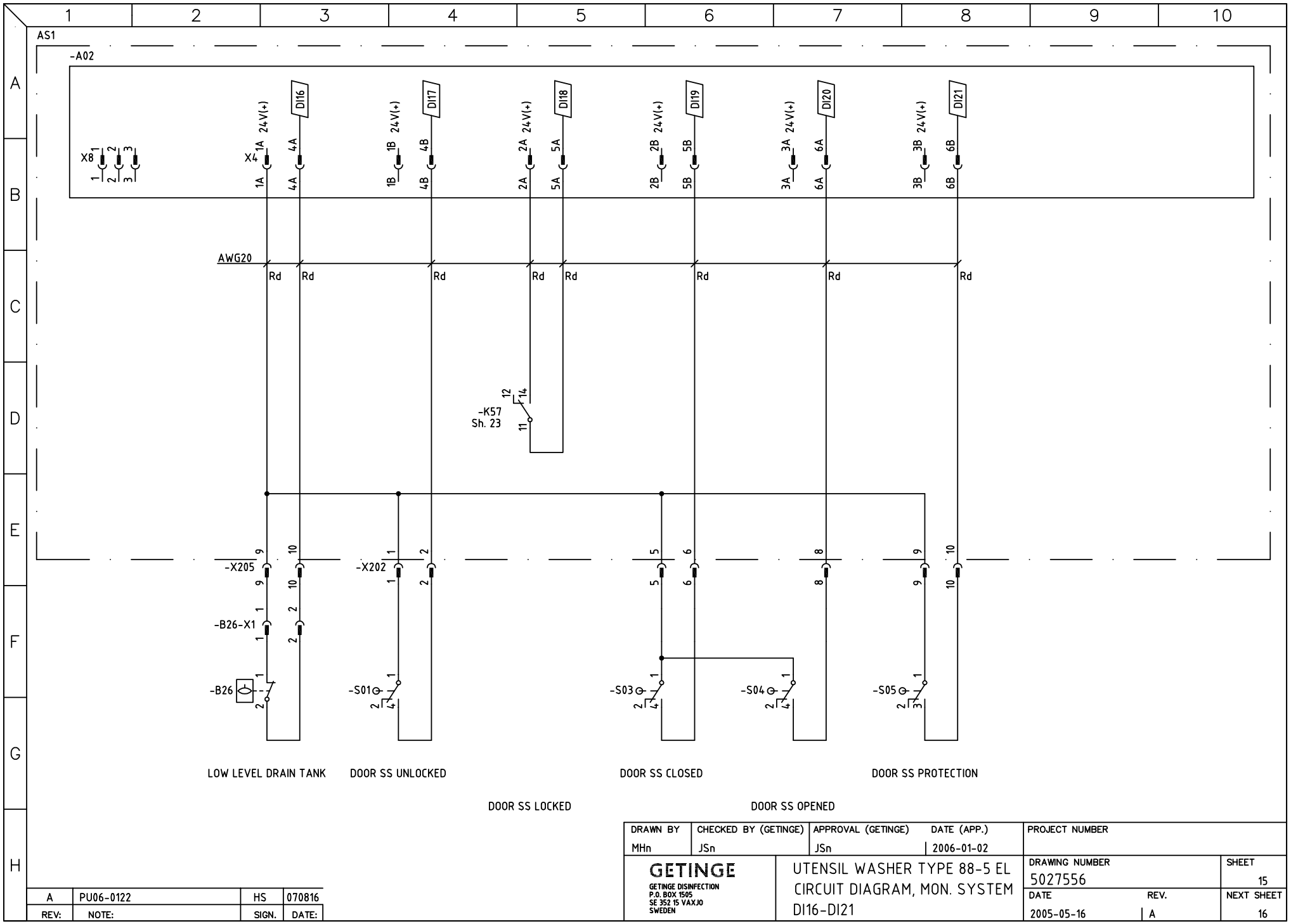

DRAWN BY	CHECKED BY (GETINGE)	APPROVAL (GETINGE)	DATE (APP.)	PROJECT NUMBER
MHn	JSn	JSn	2006-01-02	

GETINGE
GETINGE DISINFECTION
P.O. BOX 1505
SE 352 15 VAXJO
SWEDEN

UTENSIL WASHER TYPE 88-5 EL
CIRCUIT DIAGRAM, MON. SYSTEM
DI16-DI21

DRAWING NUMBER	SHEET
5027556	15
DATE / REV.	NEXT SHEET
2005-05-16 / A	16

REV:	NOTE:	SIGN.	DATE:
A	PU06-0122	HS	070816

Downloaded from www.Manualslib.com manuals search engine

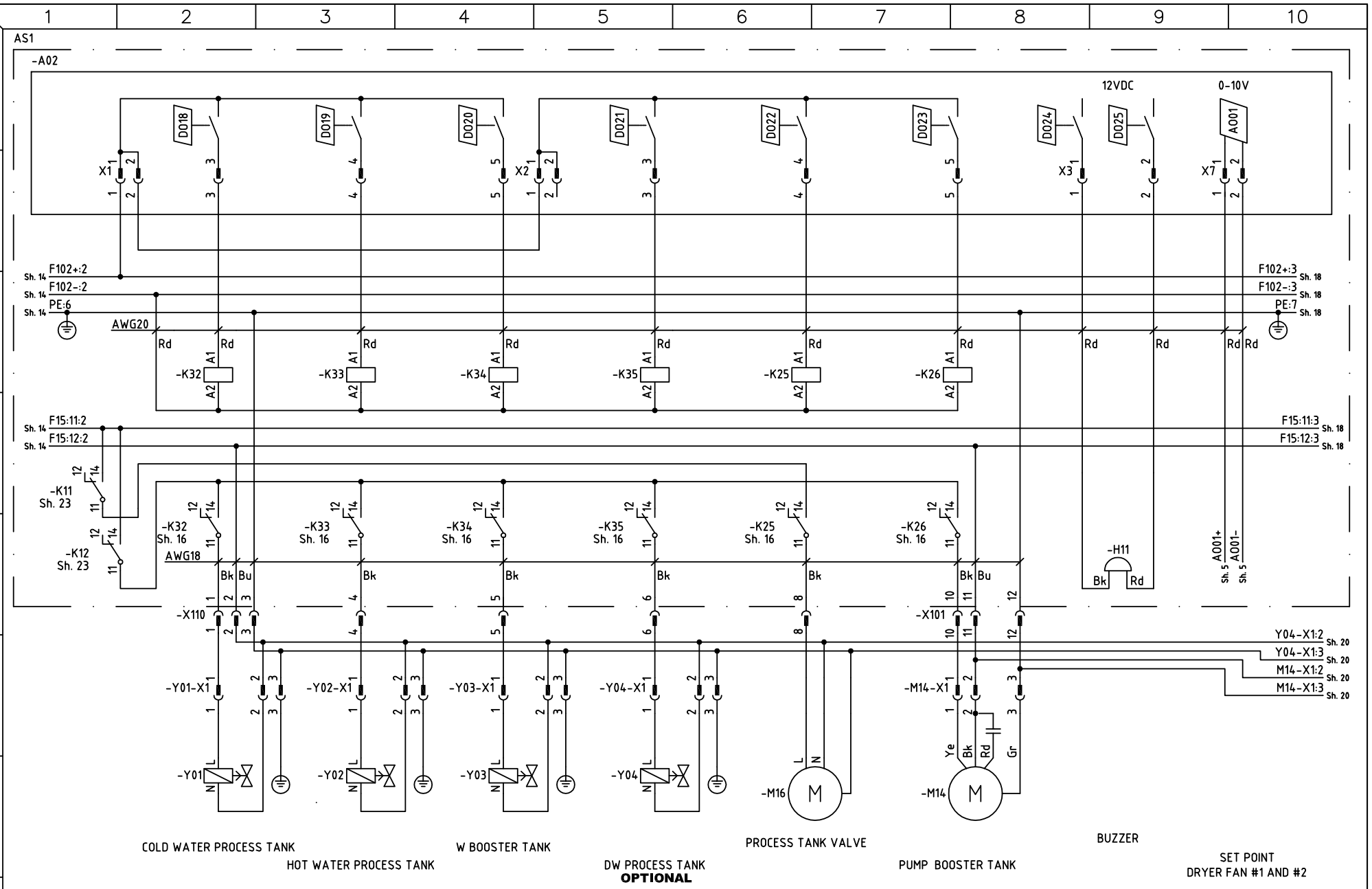

DRAWN BY	CHECKED BY (GETINGE)	APPROVAL (GETINGE)	DATE (APP.)	PROJECT NUMBER
MHn	JSn	JSn	2006-01-02	

GETINGE
GETINGE DISINFECTION
P.O. BOX 1505
SE 352 15 VAXJO
SWEDEN

UTENSIL WASHER TYPE 88-5 EL
CIRCUIT DIAGRAM, MON. SYSTEM
D018-D025, A001

DRAWING NUMBER	SHEET
5027556	16
DATE / REV.	NEXT SHEET
2005-05-16 / A	17

A	PU06-0122	HS	070816
REV:	NOTE:	SIGN.	DATE:

Downloaded from www.Manualslib.com manuals search engine

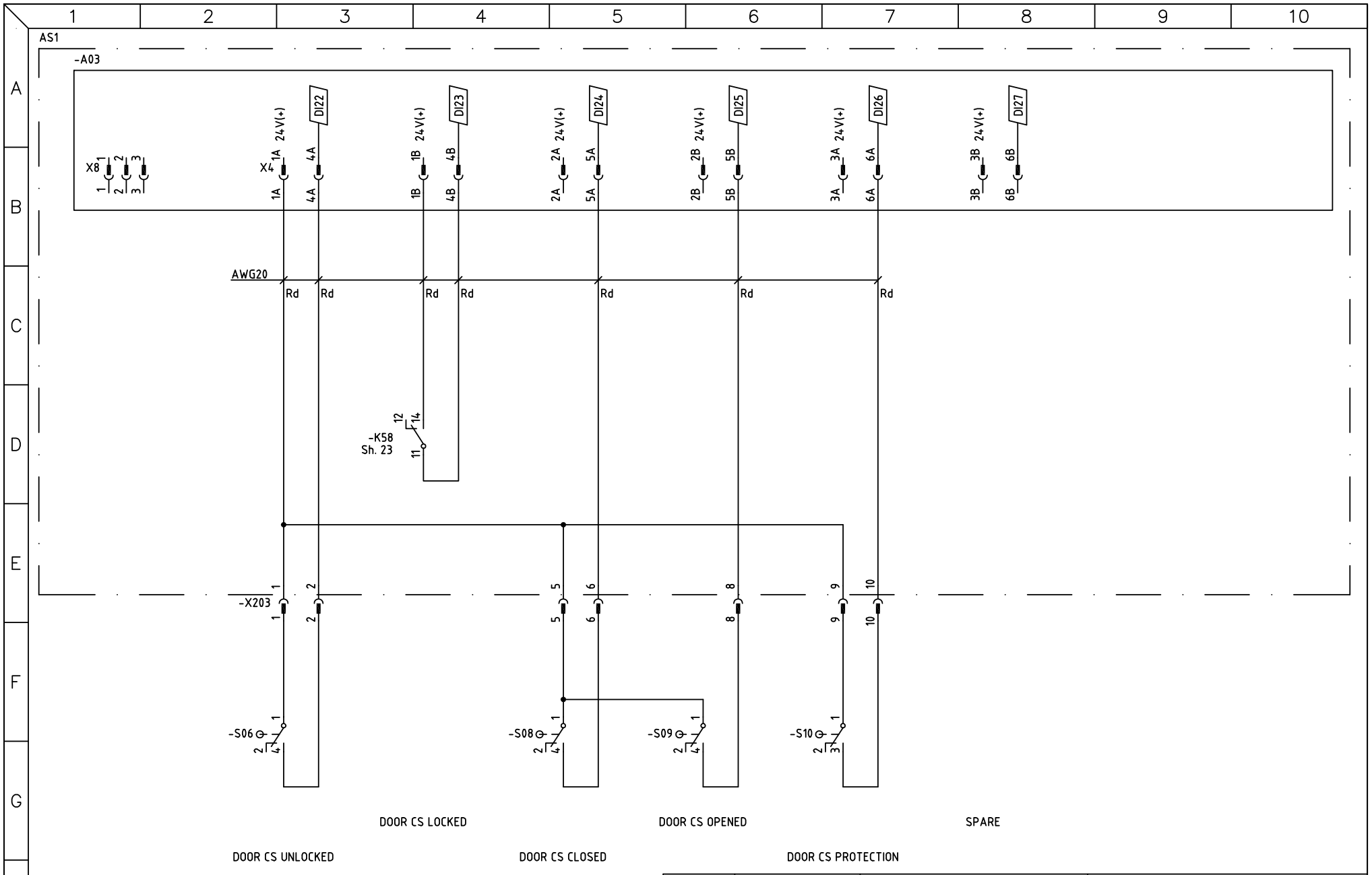

A	PU06-0122	HS	070816
REV:	NOTE:	SIGN.	DATE:

DRAWN BY	CHECKED BY (GETINGE)	APPROVAL (GETINGE)	DATE (APP.)	PROJECT NUMBER
MHn	JSn	JSn	2006-01-02	

GETINGE
GETINGE DISINFECTION
P.O. BOX 1505
SE 352 15 VAXJO
SWEDEN

UTENSIL WASHER TYPE 88-5 EL
CIRCUIT DIAGRAM, MON. SYSTEM
DI22-DI27

DRAWING NUMBER		SHEET
5027556		17
DATE	REV.	NEXT SHEET
2005-05-16	A	18

Downloaded from www.Manualslib.com manuals search engine

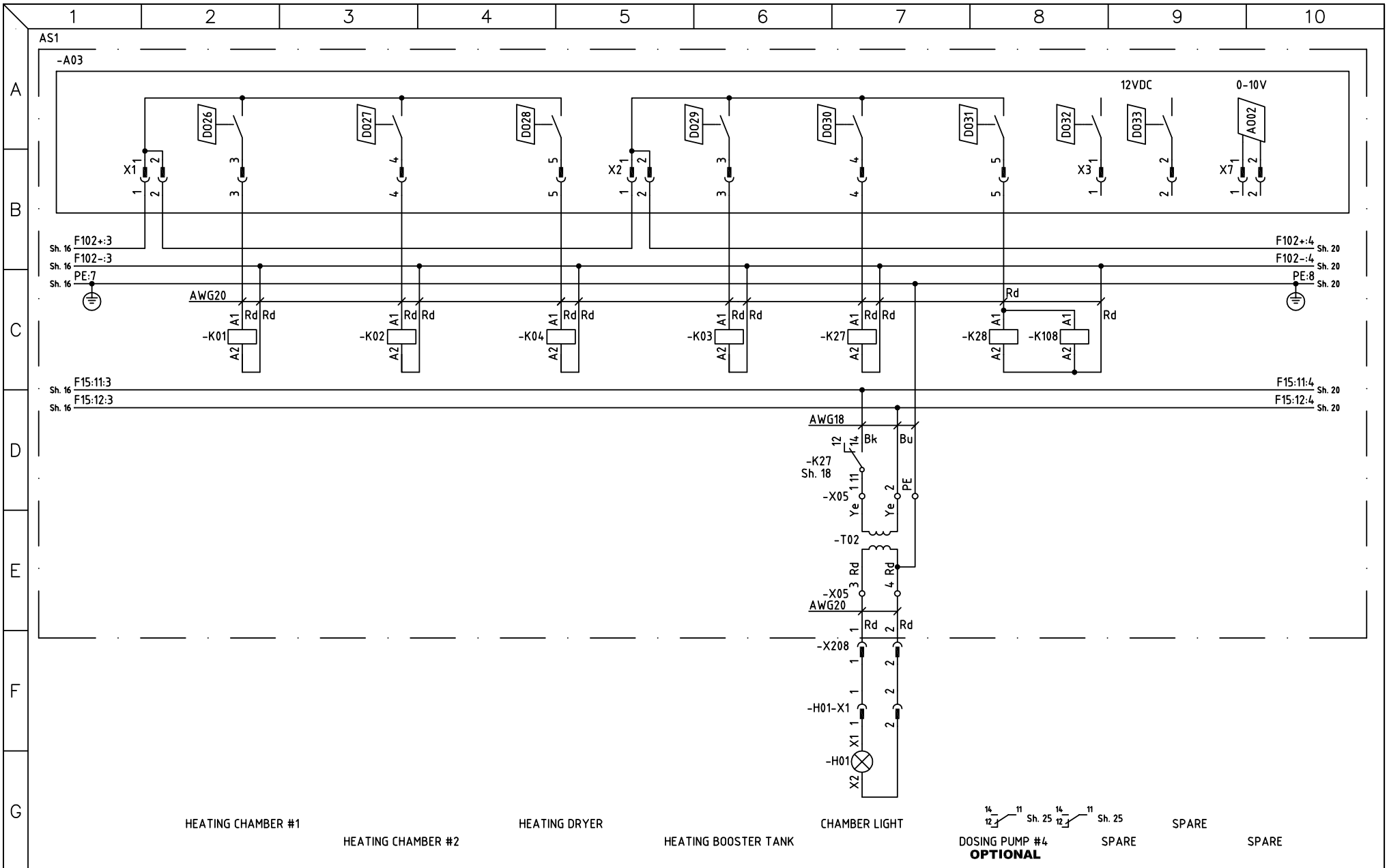

DRAWN BY	CHECKED BY (GETINGE)	APPROVAL (GETINGE)	DATE (APP.)	PROJECT NUMBER
MHn	JSn	JSn	2006-01-02	

GETINGE
GETINGE DISINFECTION
P.O. BOX 1505
SE 352 15 VAXJO
SWEDEN

UTENSIL WASHER TYPE 88-5 EL
CIRCUIT DIAGRAM, MON. SYSTEM
D026-D033, A002

DRAWING NUMBER	SHEET
5027556	18
DATE / REV.	NEXT SHEET
2005-05-16 / A	19

REV:	NOTE:	SIGN.	DATE:
A	PU06-0122	HS	070816

Downloaded from www.Manualslib.com manuals search engine

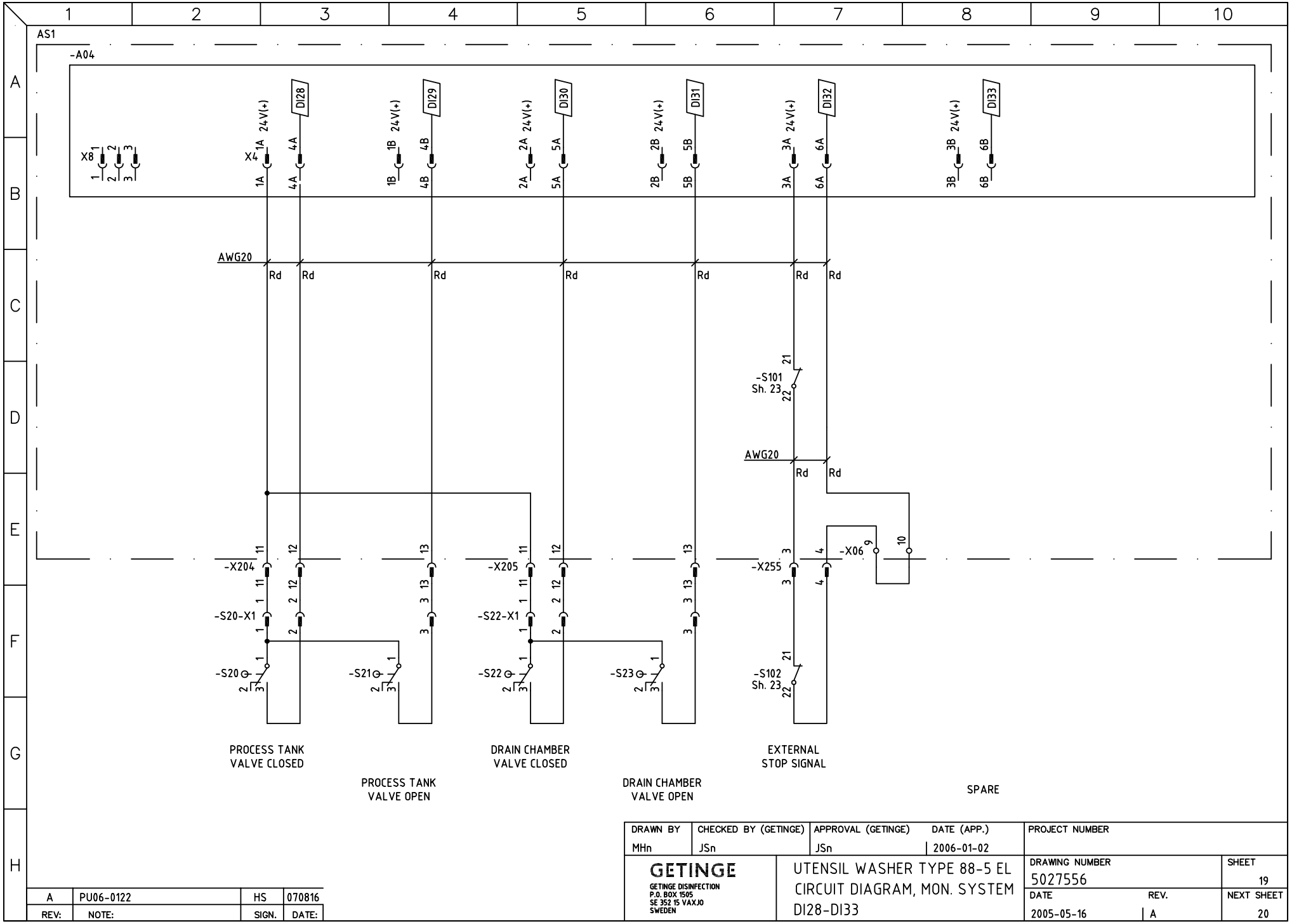

DRAWN BY	CHECKED BY (GETINGE)	APPROVAL (GETINGE)	DATE (APP.)	PROJECT NUMBER
MHn	JSn	JSn	2006-01-02	

GETINGE
GETINGE DISINFECTION
P.O. BOX 1505
SE 352 15 VAXJO
SWEDEN

UTENSIL WASHER TYPE 88-5 EL
CIRCUIT DIAGRAM, MON. SYSTEM
DI28-DI33

DRAWING NUMBER	SHEET
5027556	19
DATE / REV.	NEXT SHEET
2005-05-16 / A	20

A	PU06-0122	HS	070816
REV:	NOTE:	SIGN.	DATE:

Downloaded from www.Manualslib.com manuals search engine

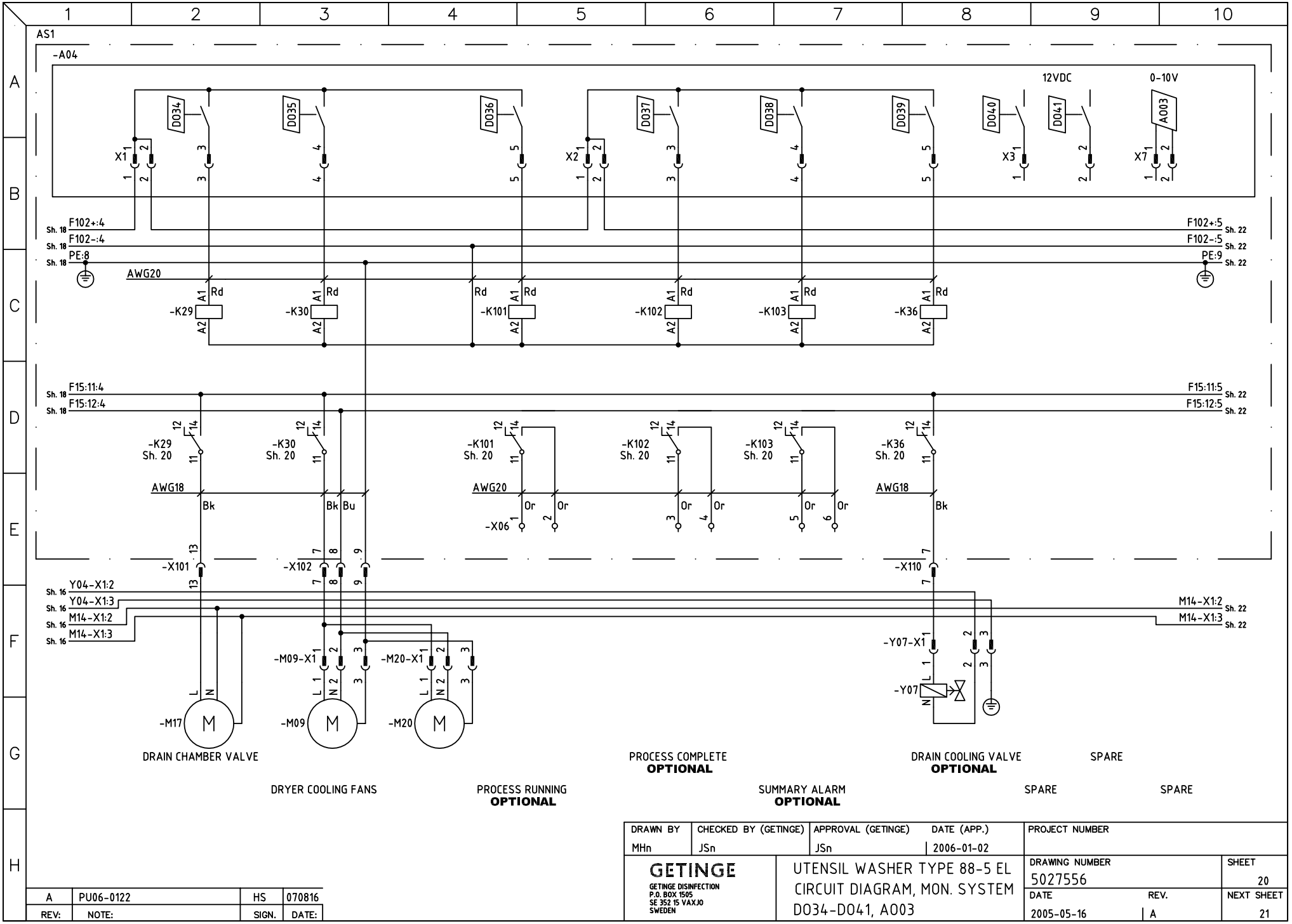

DRAWN BY	CHECKED BY (GETINGE)	APPROVAL (GETINGE)	DATE (APP.)	PROJECT NUMBER
MHn	JSn	JSn	2006-01-02	

GETINGE
GETINGE DISINFECTION
P.O. BOX 1505
SE 352 15 VAXJO
SWEDEN

UTENSIL WASHER TYPE 88-5 EL
CIRCUIT DIAGRAM, MON. SYSTEM
D034-D041, A003

DRAWING NUMBER	SHEET
5027556	20
DATE / REV.	NEXT SHEET
2005-05-16 / A	21

REV:	NOTE:	SIGN.	DATE:
A	PU06-0122	HS	070816

Downloaded from www.Manualslib.com manuals search engine

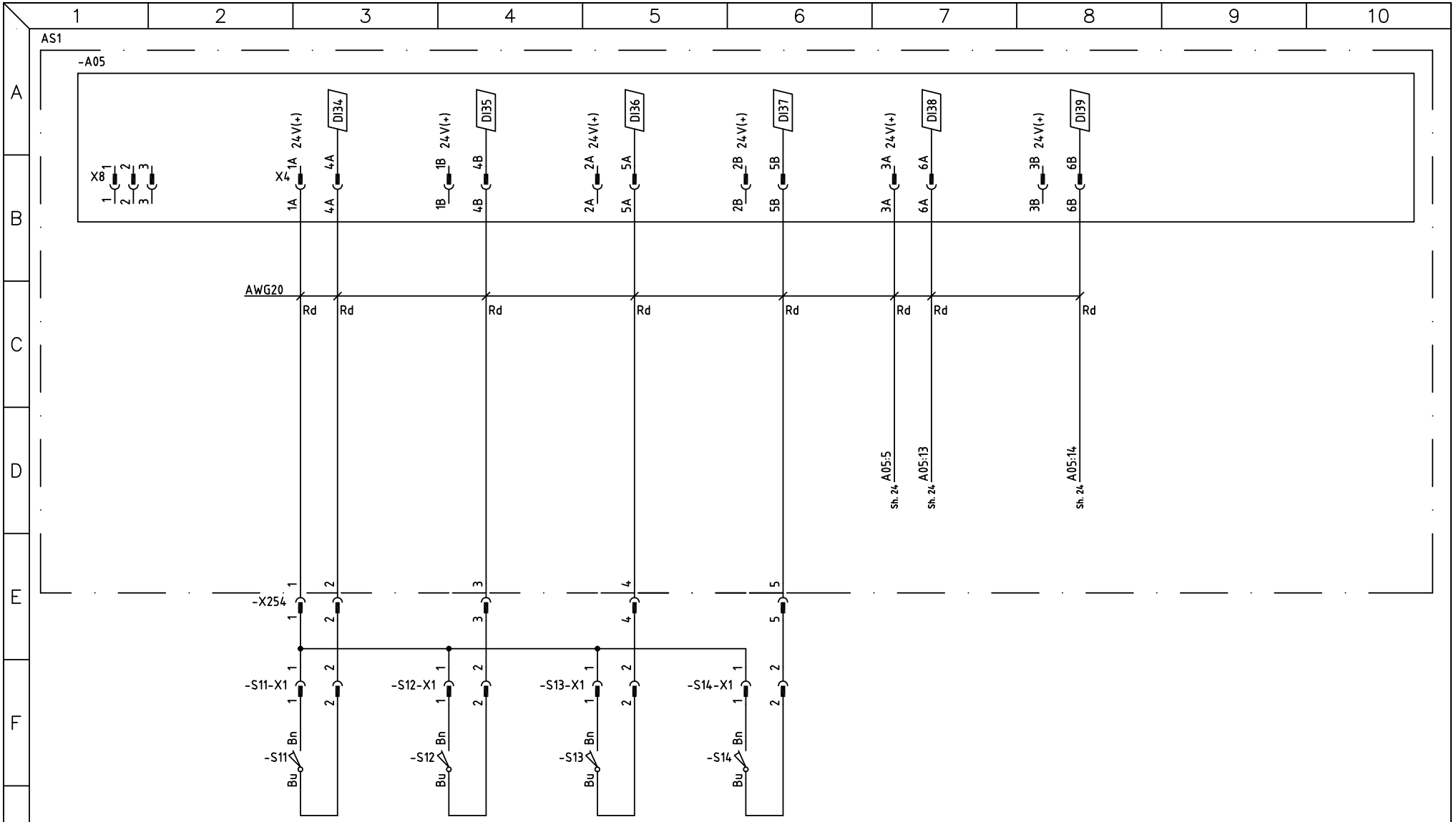

TROLLEY INDICATION #1
OPTIONAL

TROLLEY INDICATION #2
OPTIONAL

TROLLEY INDICATION #3
OPTIONAL

TROLLEY INDICATION #4
OPTIONAL

AGS INFEED READY
OPTIONAL

AGS OUTFEED READY
OPTIONAL

DRAWN BY	CHECKED BY (GETINGE)	APPROVAL (GETINGE)	DATE (APP.)	PROJECT NUMBER
MHn	JSn	JSn	2006-01-02	

GETINGE
GETINGE DISINFECTION
P.O. BOX 1505
SE 352 15 VAXJO
SWEDEN

UTENSIL WASHER TYPE 88-5 EL
CIRCUIT DIAGRAM, MON. SYSTEM
DI34-DI39

DRAWING NUMBER	SHEET
5027556	21
DATE / REV.	NEXT SHEET
2005-05-16 / A	22

REV:	NOTE:	SIGN.	DATE:
A	PU06-0122	HS	070816

Downloaded from www.Manualslib.com manuals search engine

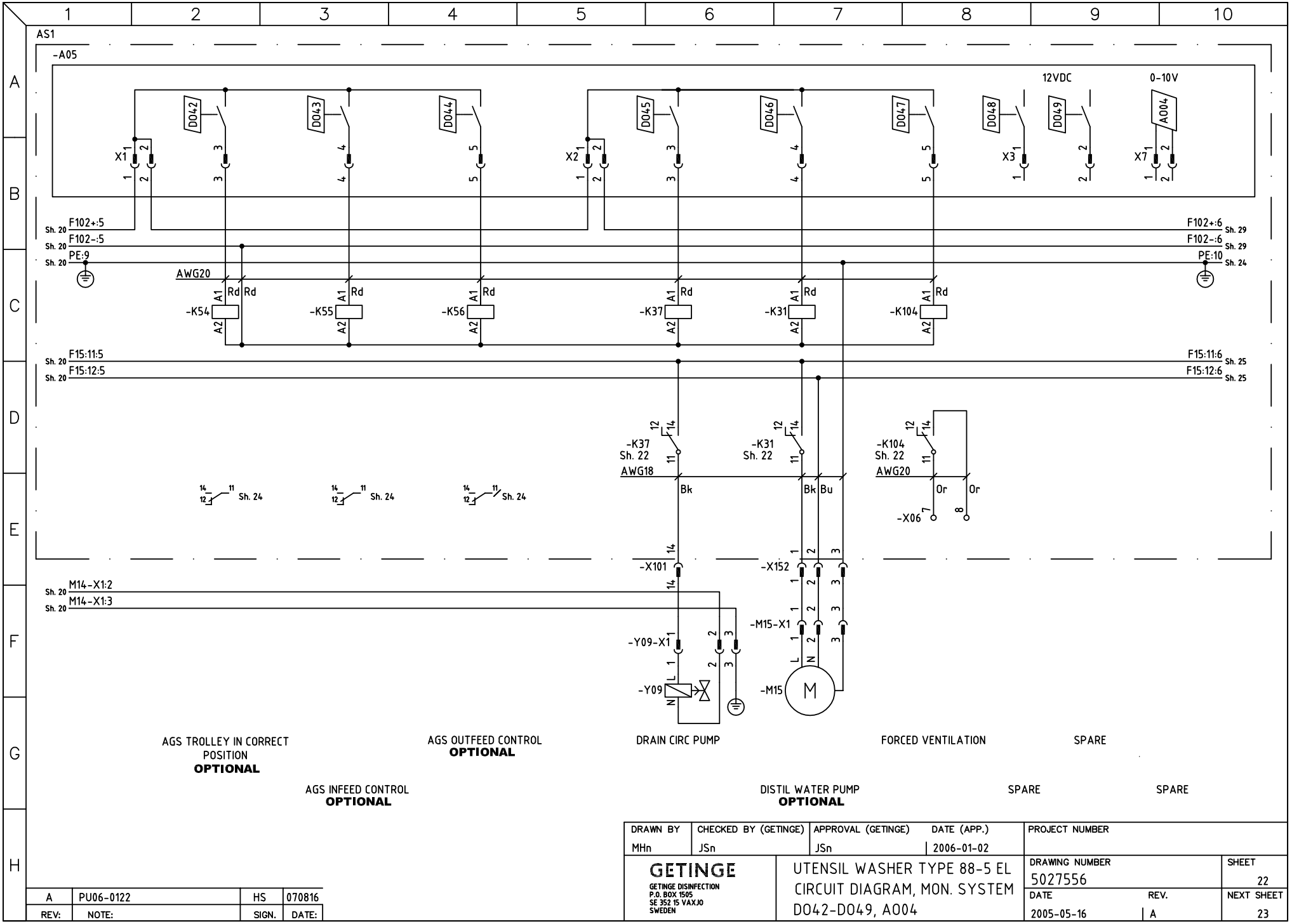

DRAWN BY	CHECKED BY (GETINGE)	APPROVAL (GETINGE)	DATE (APP.)	PROJECT NUMBER
MHn	JSn	JSn	2006-01-02	

GETINGE
GETINGE DISINFECTION
P.O. BOX 1505
SE 352 15 VAXJO
SWEDEN

UTENSIL WASHER TYPE 88-5 EL
CIRCUIT DIAGRAM, MON. SYSTEM
D042-D049, A004

DRAWING NUMBER	SHEET
5027556	22
DATE / REV.	NEXT SHEET
2005-05-16 / A	23

REV:	NOTE:	SIGN.	DATE:
A	PU06-0122	HS	070816

Downloaded from www.Manualslib.com manuals search engine

THIS DRAWING CONTAINS CONFIDENTIAL INFORMATION AND REMAINS THE PROPERTY OF GETINGE DISINFECTION AB WITHOUT WHOSE PERMISSION IT MAY NOT BE COPIED, SHOWN OR HANDED TO A THIRD PART OR USED AT THE BASIS OF ALTERNATE DESIGNS

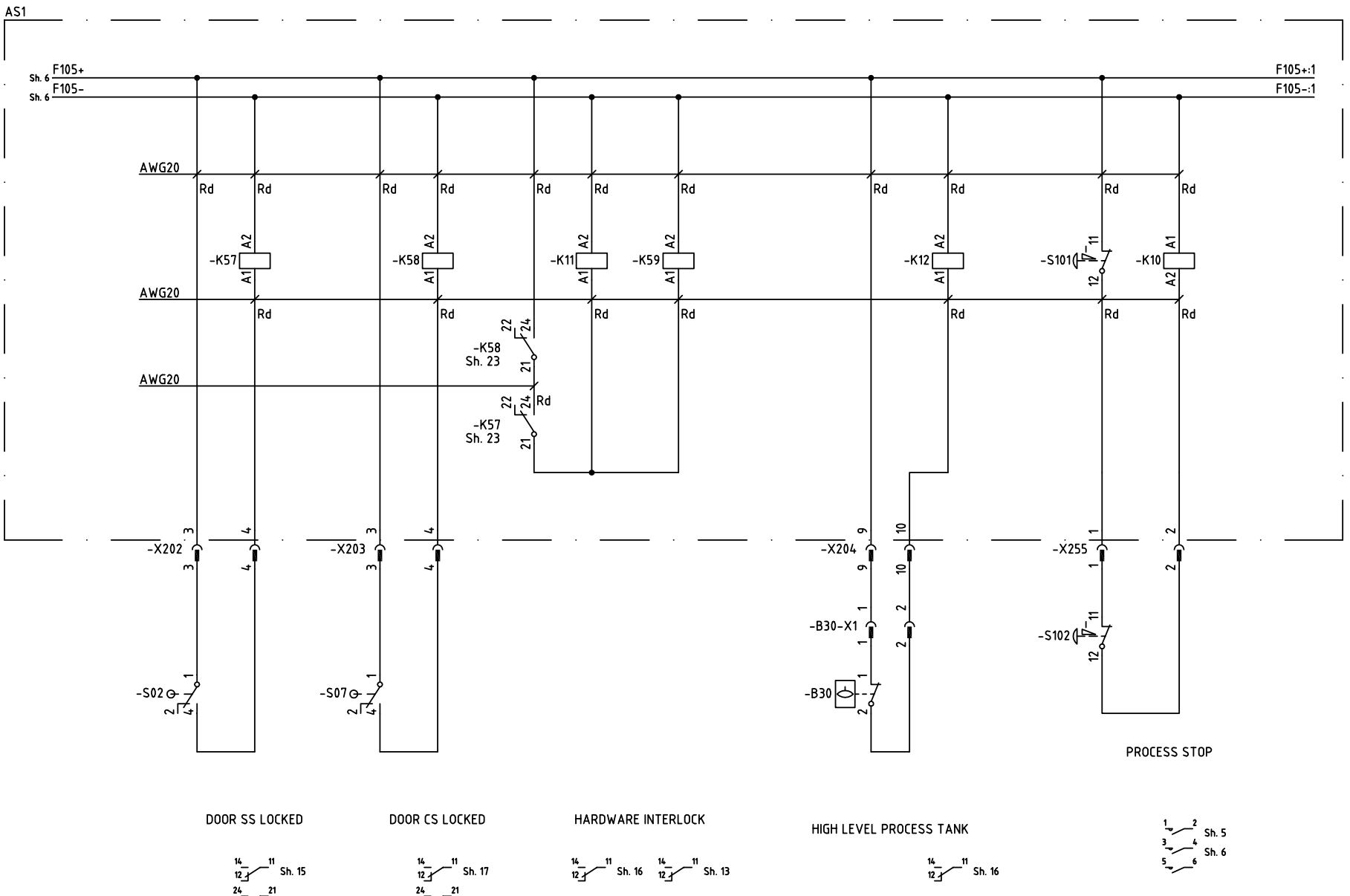

DRAWN BY	CHECKED BY (GETINGE)	APPROVAL (GETINGE)	DATE (APP.)	PROJECT NUMBER
MHn	JSn	JSn	2006-01-02	

GETINGE
GETINGE DISINFECTION
P.O. BOX 1505
SE 352 15 VÄXJÖ
SWEDEN

UTENSIL WASHER TYPE 88-5 EL
CIRCUIT DIAGRAM, MON. SYSTEM
HARDWARE INTERLOCKS

DRAWING NUMBER	SHEET
5027556	23
DATE / REV.	NEXT SHEET
2005-05-16 / A	24

REV:	NOTE:	SIGN.	DATE:
A	PU06-0122	HS	070816

Downloaded from www.Manualslib.com manuals search engine

THIS DRAWING CONTAINS CONFIDENTIAL INFORMATION AND REMAINS THE PROPERTY OF GETINGE DISINFECTION AB WITHOUT WHOSE PERMISSION IT MAY NOT BE COPIED, SHOWN OR HANDED TO A THIRD PART OR USED AT THE BASIS OF ALTERNATE DESIGNS

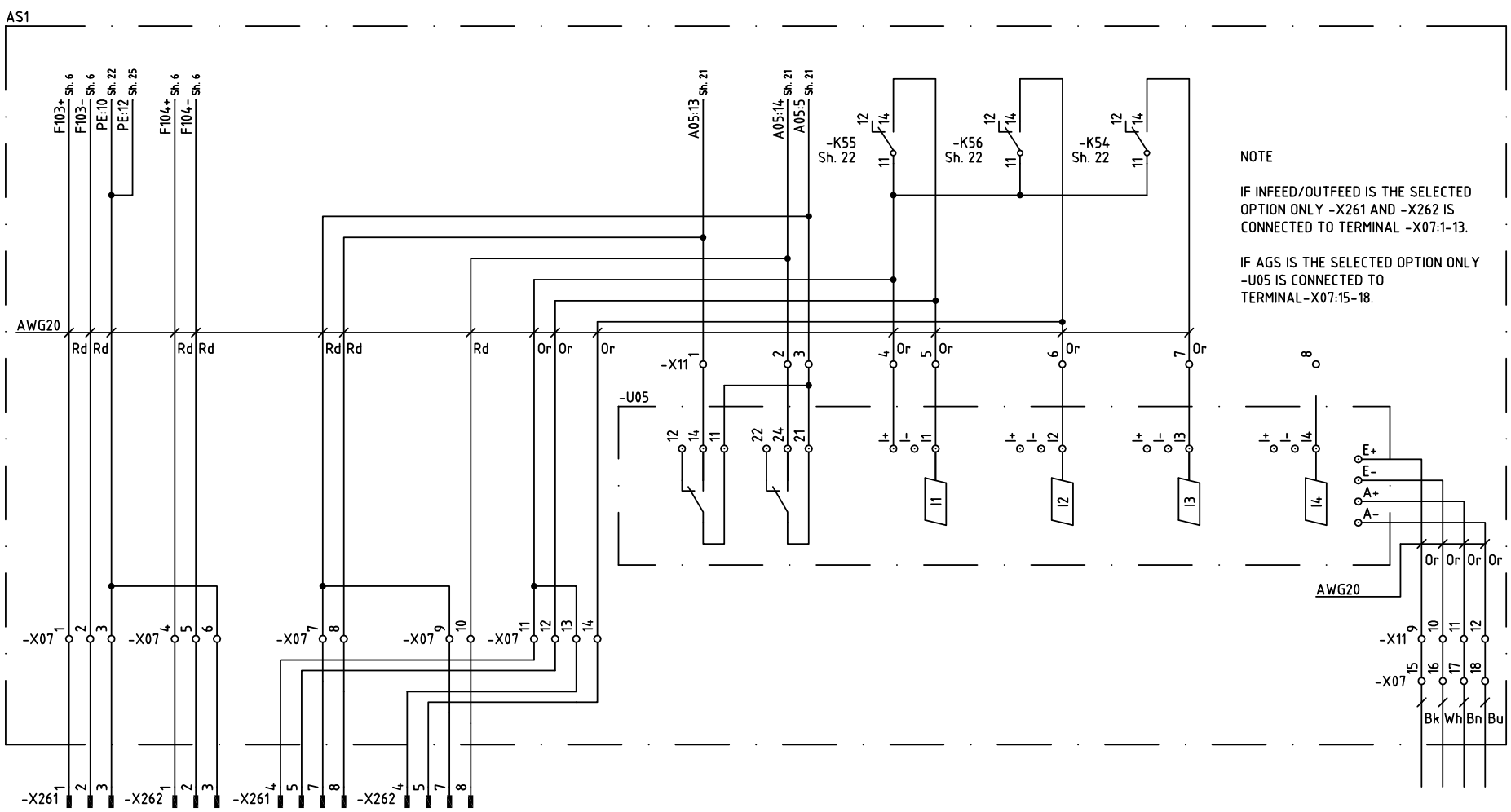

A	PU06-0122	HS	070816
REV:	NOTE:	SIGN.	DATE:

DRAWN BY	CHECKED BY (GETINGE)	APPROVAL (GETINGE)	DATE (APP.)
MHn	JSn	JSn	2006-01-02

GETINGE
GETINGE DISINFECTION
P.O. BOX 1505
SE 352 15 VÄXJÖ
SWEDEN

UTENSIL WASHER TYPE 88-5 EL
CIRCUIT DIAGRAM, MON. SYSTEM
AGS SIGNALS

PROJECT NUMBER		
DRAWING NUMBER		SHEET
5027556		24
DATE	REV.	NEXT SHEET
2005-05-16	A	25

Downloaded from www.Manualslib.com manuals search engine

THIS DRAWING CONTAINS CONFIDENTIAL INFORMATION AND REMAINS THE PROPERTY OF GETINGE DISINFECTION AB WITHOUT WHOSE PERMISSION IT MAY NOT BE COPIED, SHOWN OR HANDED TO A THIRD PART OR USED AT THE BASIS OF ALTERNATE DESIGNS

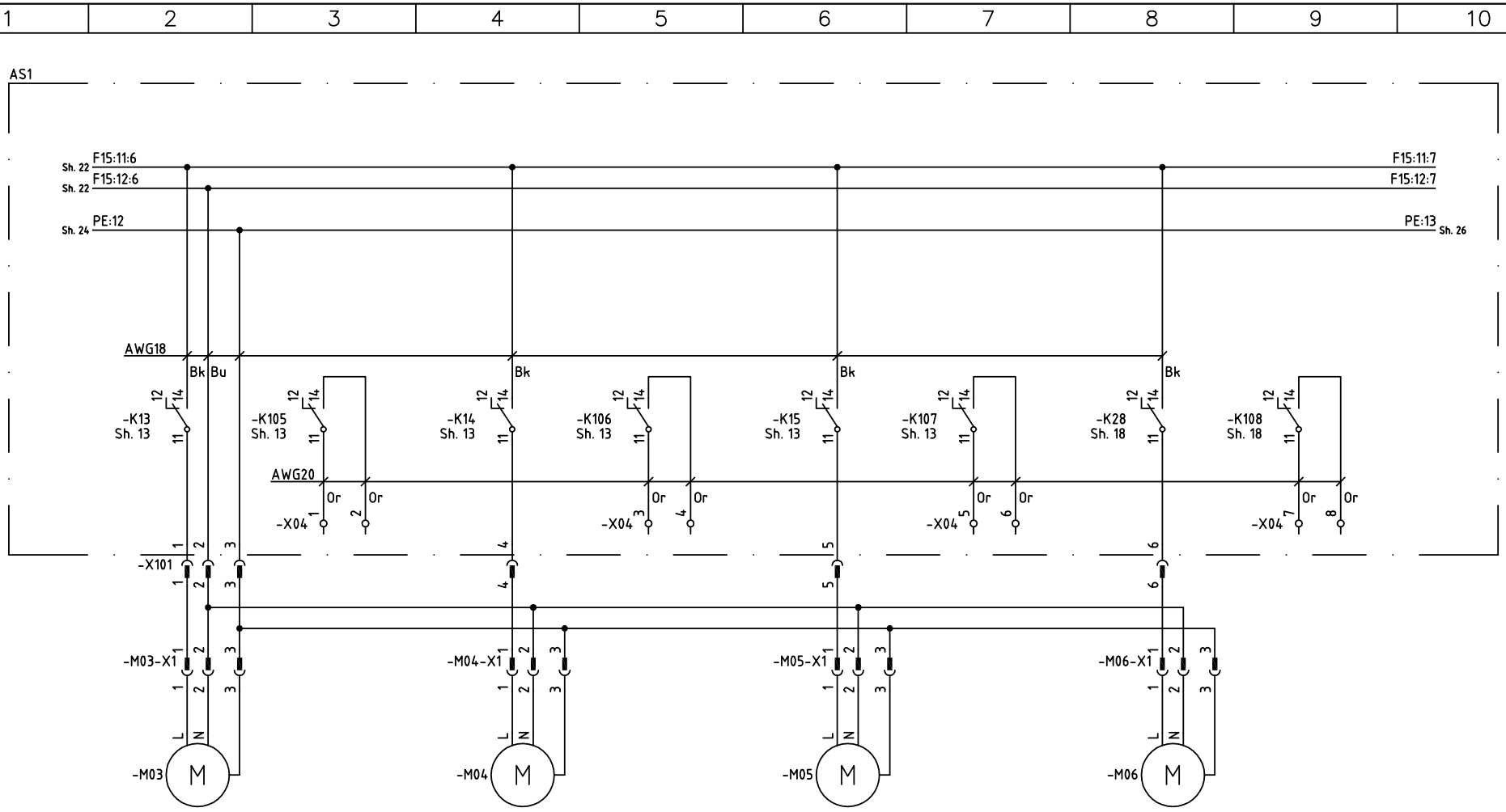

DRAWN BY	CHECKED BY (GETINGE)	APPROVAL (GETINGE)	DATE (APP.)	PROJECT NUMBER
MHn	JSn	JSn	2006-01-02	

GETINGE
GETINGE DISINFECTION
P.O. BOX 1505
SE 352 15 VÄXJÖ
SWEDEN

UTENSIL WASHER TYPE 88-5 EL
CIRCUIT DIAGRAM, MON. SYSTEM
DOSING PUMPS

DRAWING NUMBER	SHEET
5027556	25
DATE / REV.	NEXT SHEET
2005-05-16 / A	26

REV:	NOTE:	SIGN.	DATE:
A	PU06-0122	HS	070816

Downloaded from www.Manualslib.com manuals search engine

THIS DRAWING CONTAINS CONFIDENTIAL INFORMATION AND REMAINS THE PROPERTY OF GETINGE DISINFECTION AB WITHOUT WHOSE PERMISSION IT MAY NOT BE COPIED, SHOWN OR HANDED TO A THIRD PART OR USED AT THE BASIS OF ALTERNATE DESIGNS

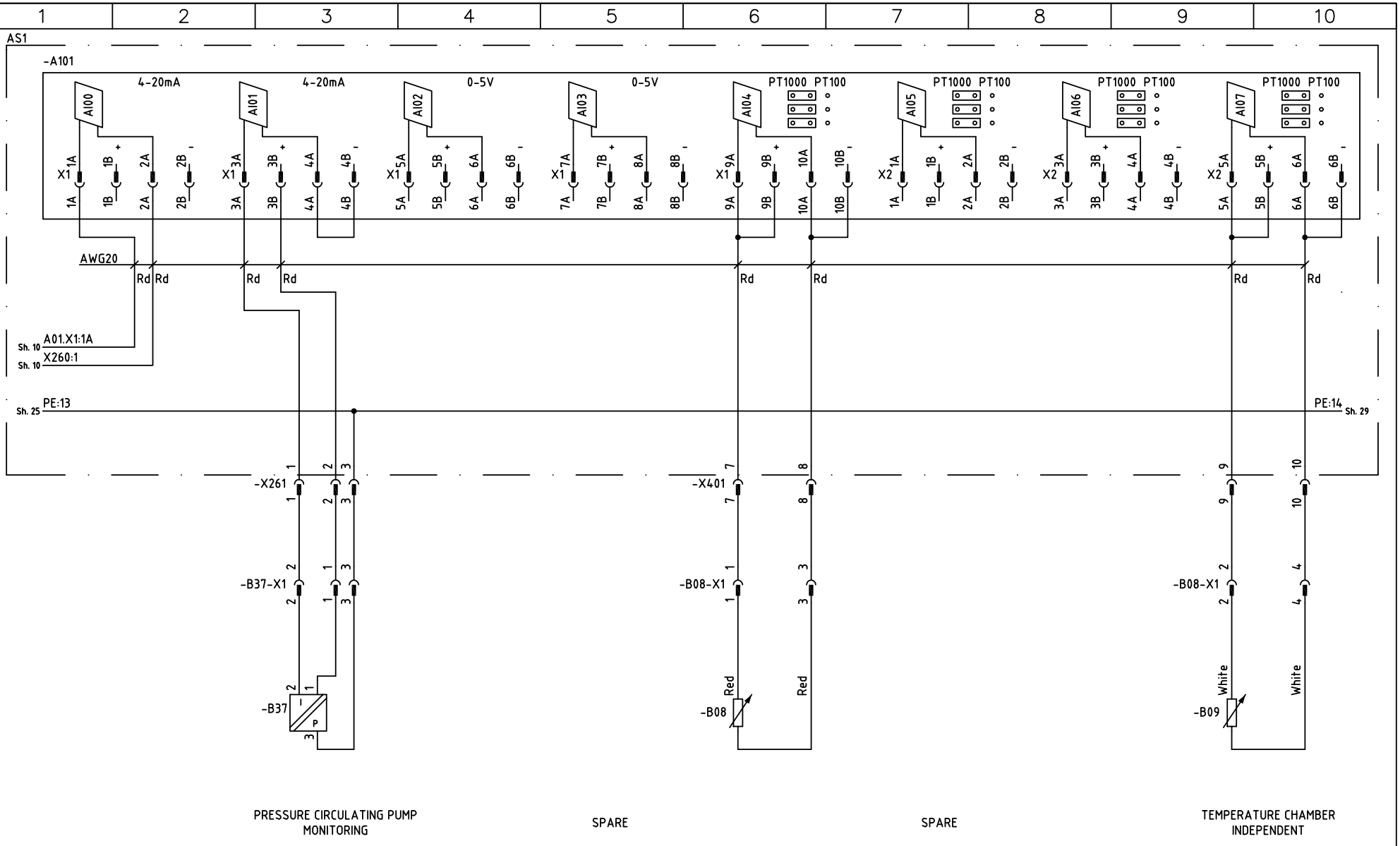

DRAWN BY	CHECKED BY (GETINGE)	APPROVAL (GETINGE)	DATE (APP.)	PROJECT NUMBER
MHn	JSn	JSn	2006-01-02	

GETINGE
GETINGE DISINFECTION
P.O. BOX 1505
SE 352 15 VÄXJÖ
SWEDEN

UTENSIL WASHER TYPE 88-5 EL
CIRCUIT DIAGRAM, MON. SYSTEM
MONITORING SYSTEM AI00- AI07

DRAWING NUMBER	SHEET
5027556	26
DATE / REV.	NEXT SHEET
2005-05-16 / A	27

REV:	NOTE:	SIGN.	DATE:
A	PU06-0122	HS	070816

Downloaded from www.Manualslib.com manuals search engine

THIS DRAWING CONTAINS CONFIDENTIAL INFORMATION AND REMAINS THE PROPERTY OF GETINGE DISINFECTION AB WITHOUT WHOSE PERMISSION IT MAY NOT BE COPIED, SHOWN OR HANDED TO A THIRD PART OR USED AT THE BASIS OF ALTERNATE DESIGNS

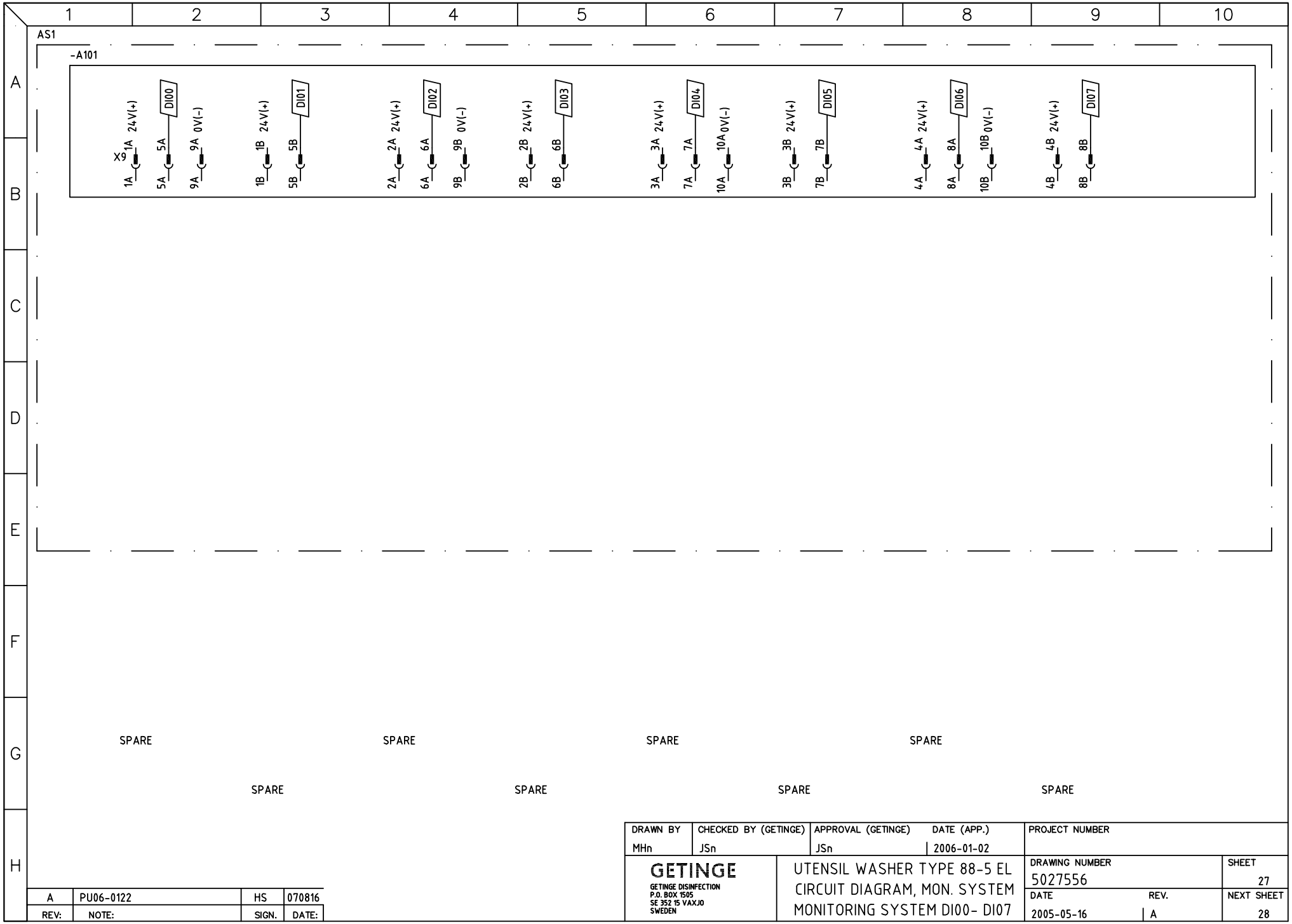

DRAWN BY	CHECKED BY (GETINGE)	APPROVAL (GETINGE)	DATE (APP.)	PROJECT NUMBER
MHn	JSn	JSn	2006-01-02	

GETINGE
GETINGE DISINFECTION
P.O. BOX 1505
SE 352 15 VÄXJÖ
SWEDEN

UTENSIL WASHER TYPE 88-5 EL
CIRCUIT DIAGRAM, MON. SYSTEM
MONITORING SYSTEM DI00- DI07

DRAWING NUMBER		SHEET
5027556		27
DATE	REV.	NEXT SHEET
2005-05-16	A	28

REV:	NOTE:	SIGN.	DATE:
A	PU06-0122	HS	070816

Downloaded from www.Manualslib.com manuals search engine

THIS DRAWING CONTAINS CONFIDENTIAL INFORMATION AND REMAINS THE PROPERTY OF GETINGE DISINFECTION AB WITHOUT WHOSE PERMISSION IT MAY NOT BE COPIED, SHOWN OR HANDED TO A THIRD PART OR USED AT THE BASIS OF ALTERNATE DESIGNS

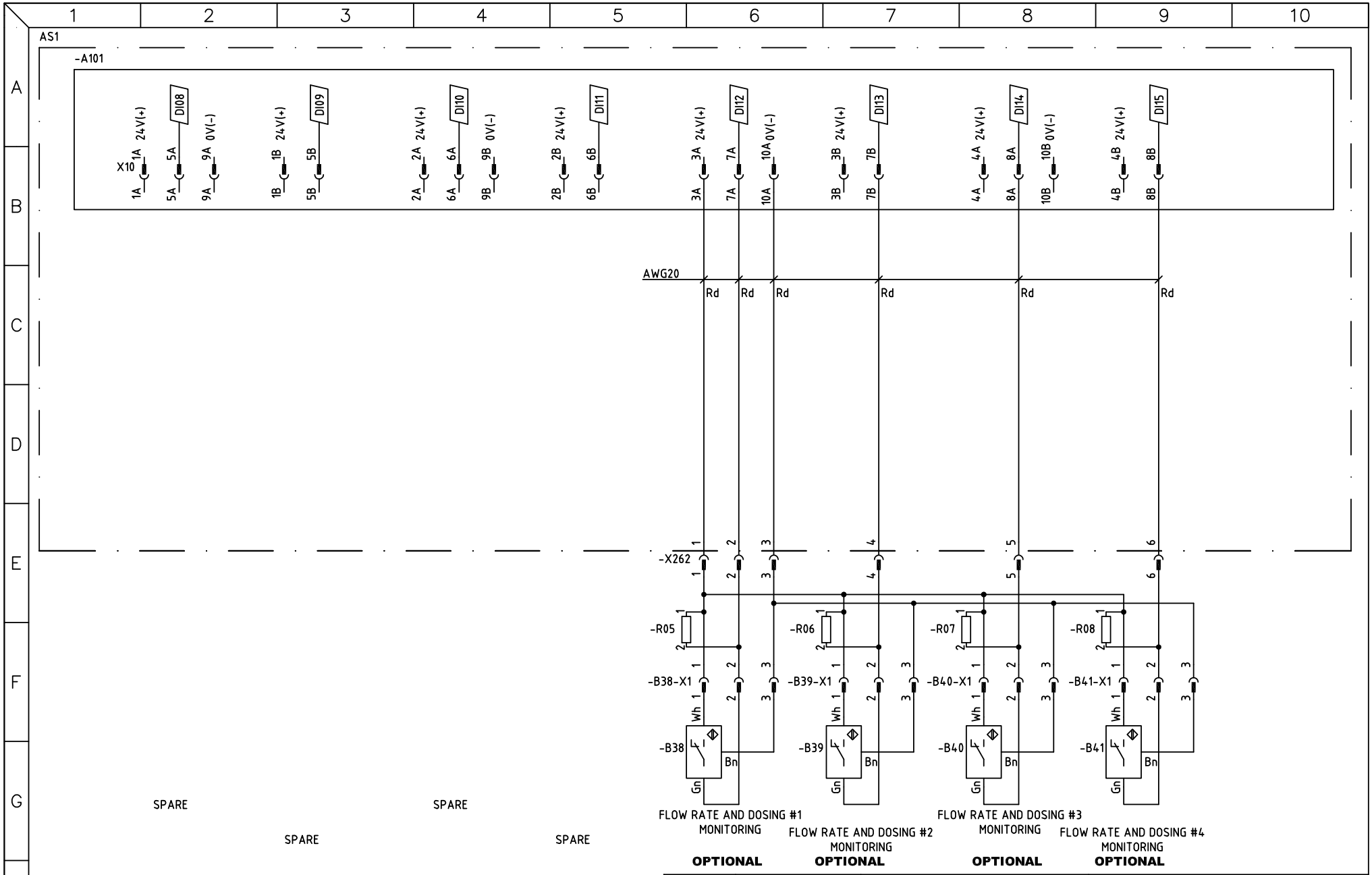

DRAWN BY	CHECKED BY (GETINGE)	APPROVAL (GETINGE)	DATE (APP.)	PROJECT NUMBER
MHn	JSn	JSn	2006-01-02	

GETINGE
GETINGE DISINFECTION
P.O. BOX 1505
SE 352 15 VÄXJÖ
SWEDEN

UTENSIL WASHER TYPE 88-5 EL
CIRCUIT DIAGRAM, MON. SYSTEM
MONITORING SYSTEM DI08- DI15

DRAWING NUMBER		SHEET
5027556		28
DATE	REV.	NEXT SHEET
2005-05-16	A	29

REV:	NOTE:	SIGN.	DATE:
A	PU06-0122	HS	070816

Downloaded from www.Manualslib.com manuals search engine

THIS DRAWING CONTAINS CONFIDENTIAL INFORMATION AND REMAINS THE PROPERTY OF GETINGE DISINFECTION AB WITHOUT WHOSE PERMISSION IT MAY NOT BE COPIED, SHOWN OR HANDED TO A THIRD PART OR USED AT THE BASIS OF ALTERNATE DESIGNS

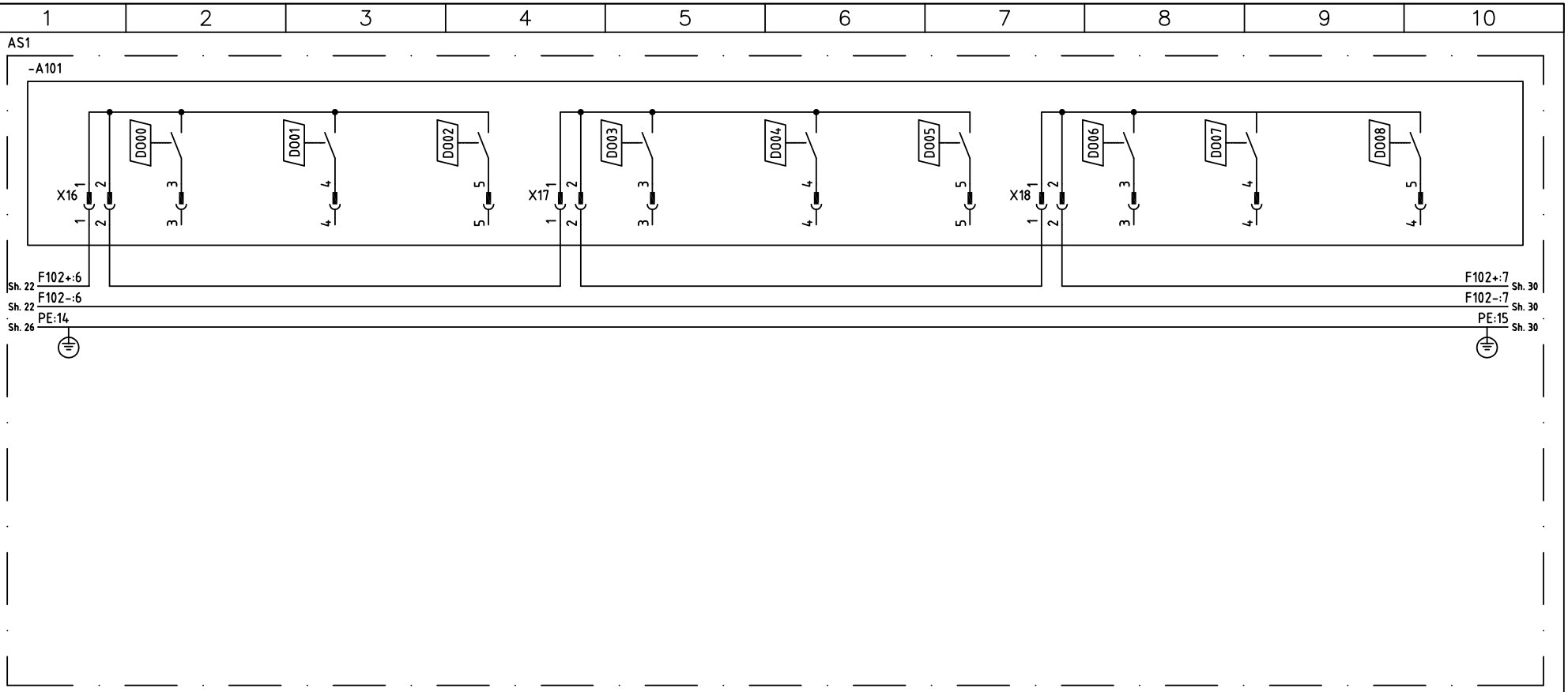

DRAWN BY	CHECKED BY (GETINGE)	APPROVAL (GETINGE)	DATE (APP.)	PROJECT NUMBER
MHn	JSn	JSn	2006-01-02	

GETINGE
GETINGE DISINFECTION
P.O. BOX 1505
SE 352 15 VÄXJÖ
SWEDEN

UTENSIL WASHER TYPE 88-5 EL
CIRCUIT DIAGRAM, MON. SYSTEM
MONITORING SYSTEM D000- D008

DRAWING NUMBER	SHEET
5027556	29
DATE / REV.	NEXT SHEET
2005-05-16 / A	30

REV:	NOTE:	SIGN.	DATE:
A	PU06-0122	HS	070816

Downloaded from www.Manualslib.com manuals search engine

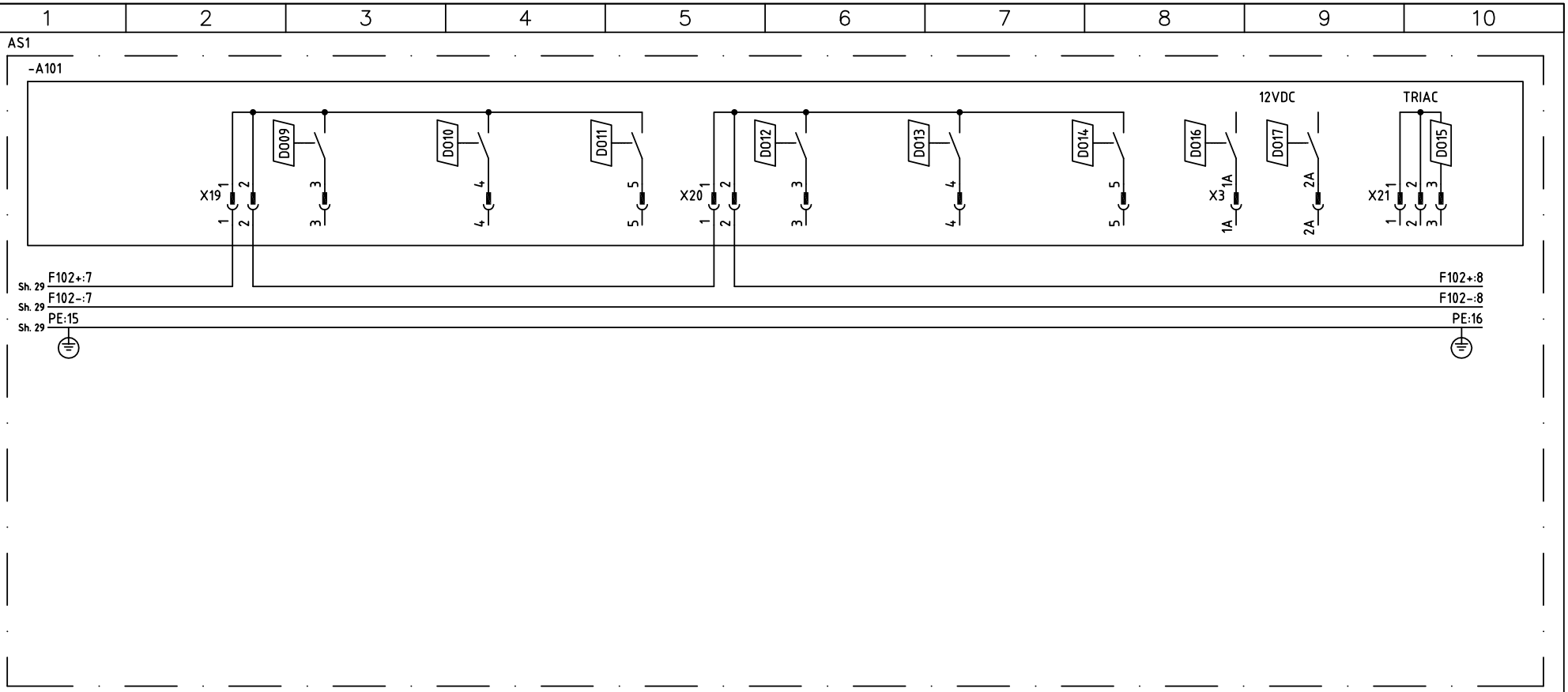

THIS DRAWING CONTAINS CONFIDENTIAL INFORMATION AND REMAINS THE PROPERTY OF GETINGE DISINFECTION AB WITHOUT WHOSE PERMISSION IT MAY NOT BE COPIED, SHOWN OR HANDED TO A THIRD PART OR USED AT THE BASIS OF ALTERNATE DESIGNS

REV:	NOTE:	SIGN.	DATE:
A	PU06-0122	HS	070816

DRAWN BY	CHECKED BY (GETINGE)	APPROVAL (GETINGE)	DATE (APP.)
MHn	JSn	JSn	2006-01-02

GETINGE
GETINGE DISINFECTION
P.O. BOX 1505
SE 352 15 VÄXJÖ
SWEDEN

UTENSIL WASHER TYPE 88-5 EL
CIRCUIT DIAGRAM, MON. SYSTEM
MONITORING SYSTEM D009- D017

PROJECT NUMBER		
DRAWING NUMBER		SHEET
5027556		30
DATE	REV.	NEXT SHEET
2005-05-16	A	51

Downloaded from www.Manualslib.com manuals search engine

THIS DRAWING CONTAINS CONFIDENTIAL INFORMATION AND REMAINS THE PROPERTY OF GETINGE DISINFECTION AB WITHOUT WHOSE PERMISSION IT MAY NOT BE COPIED, SHOWN OR HANDED TO A THIRD PART OR USED AT THE BASIS OF ALTERNATE DESIGNS

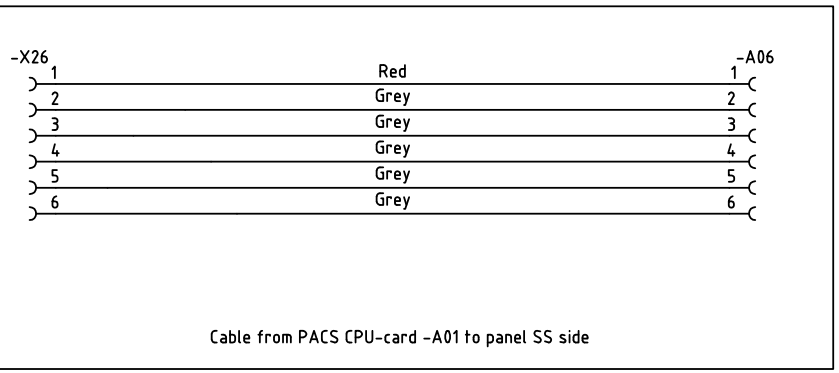

Cable from PACS CPU-card -A01 to panel SS side

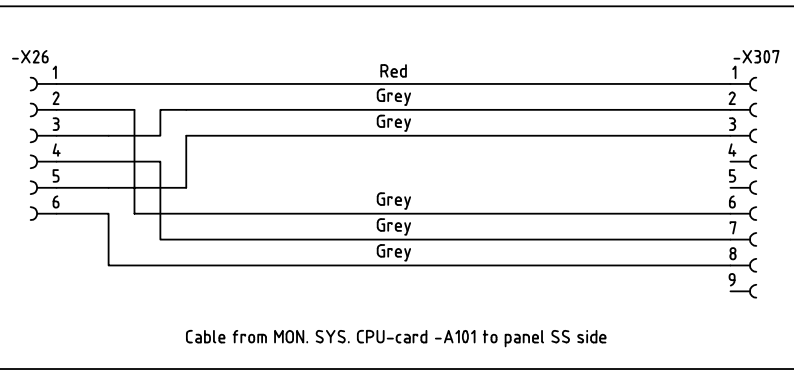

Cable from MON. SYS. CPU-card -A101 to panel SS side

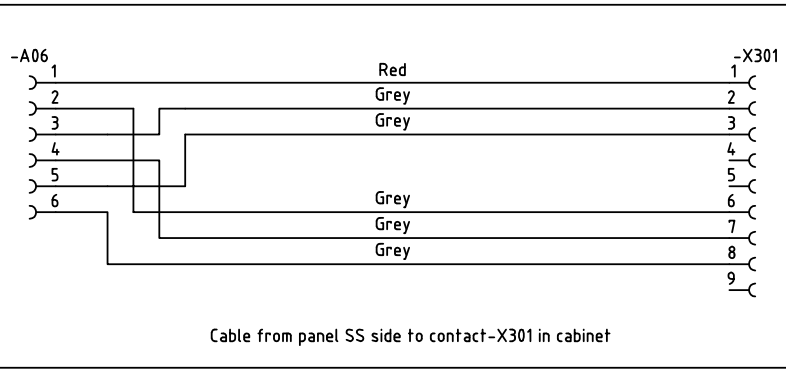

Cable from panel SS side to contact-X301 in cabinet

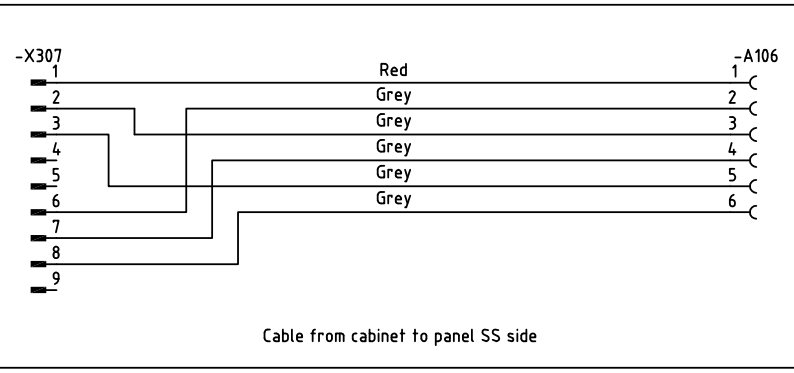

Cable from cabinet to panel SS side

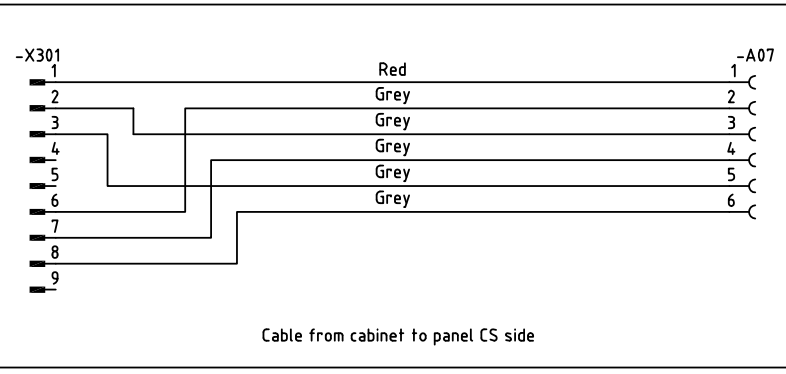

Cable from cabinet to panel CS side

A	PU06-0122	HS	070816
REV:	NOTE:	SIGN.	DATE:

DRAWN BY	CHECKED BY (GETINGE)	APPROVAL (GETINGE)	DATE (APP.)	PROJECT NUMBER	
MHn	JSn	JSn	2006-01-02		

GETINGE
GETINGE DISINFECTION
P.O. BOX 1505
SE 352 15 VÄXJÖ
SWEDEN

UTENSIL WASHER TYPE 88-5 EL
CIRCUIT DIAGRAM, MON. SYSTEM
CABLES, PANEL CS AND SS

DRAWING NUMBER		SHEET
5027556		51
DATE	REV.	NEXT SHEET
2005-05-16	A	52

Downloaded from www.Manualslib.com manuals search engine

THIS DRAWING CONTAINS CONFIDENTIAL INFORMATION AND REMAINS THE PROPERTY OF GETINGE DISINFECTION AB WITHOUT WHOSE PERMISSION IT MAY NOT BE COPIED, SHOWN OR HANDED TO A THIRD PART OR USED AT THE BASIS OF ALTERNATE DESIGNS

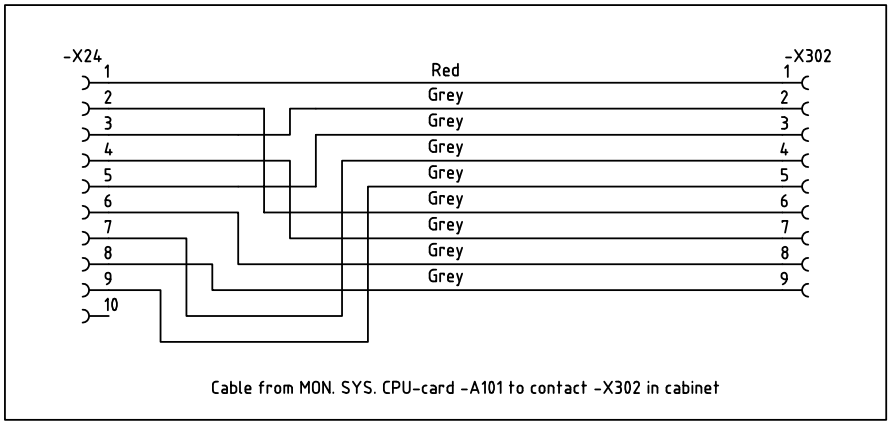

Cable from MON. SYS. CPU-card -A101 to contact -X302 in cabinet

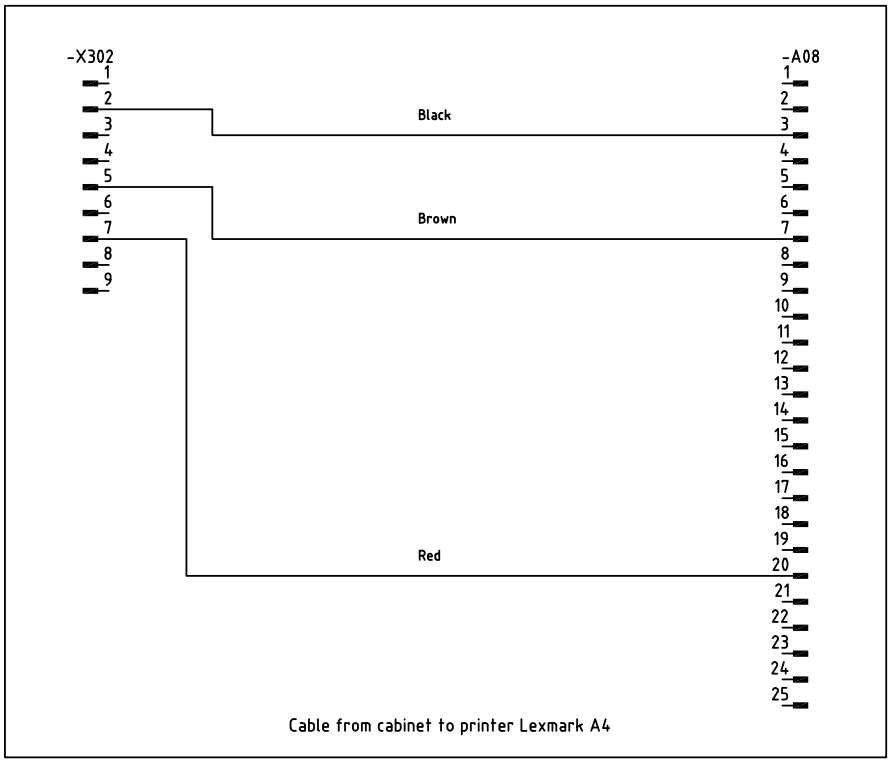

Cable from cabinet to printer Lexmark A4

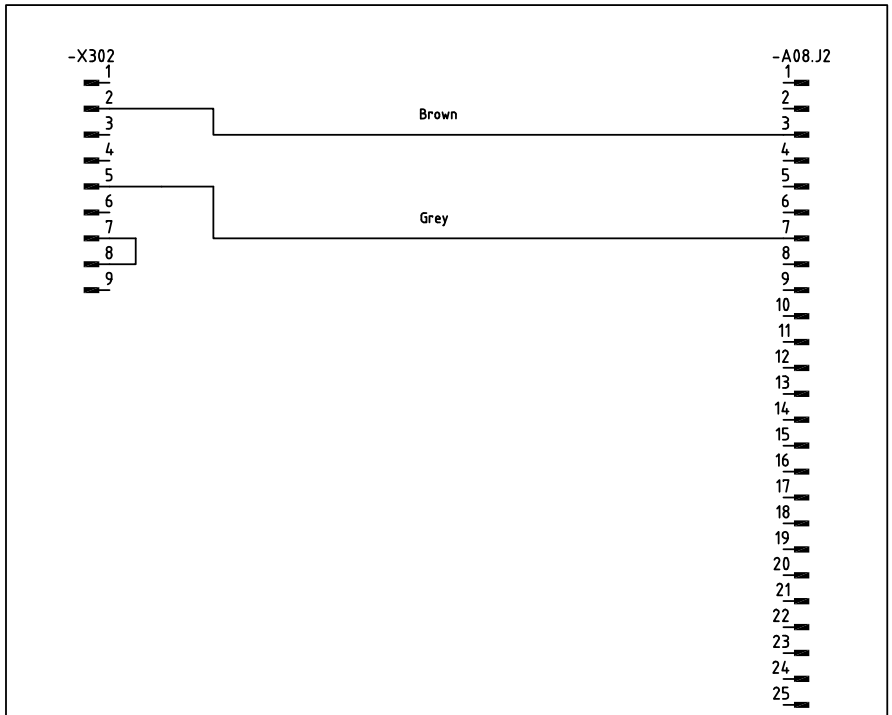

Cable from cabinet to printer CUSTOM

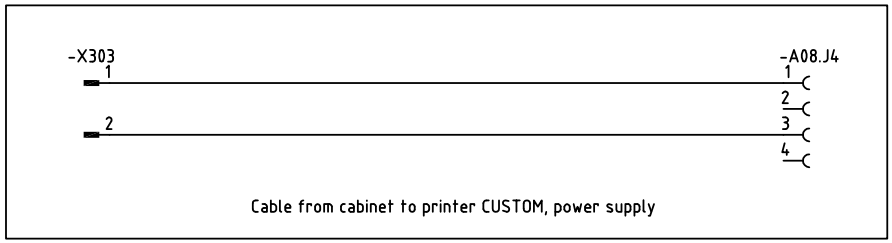

Cable from cabinet to printer CUSTOM, power supply

A	PU06-0122	HS	070816
REV:	NOTE:	SIGN.	DATE:

DRAWN BY	CHECKED BY (GETINGE)	APPROVAL (GETINGE)	DATE (APP.)
MHn	JSn	JSn	2006-01-02

PROJECT NUMBER

GETINGE
GETINGE DISINFECTION
P.O. BOX 1505
SE 352 15 VÄXJÖ
SWEDEN

UTENSIL WASHER TYPE 88-5 EL
CIRCUIT DIAGRAM, MON. SYSTEM
CABLES, PRINTER

DRAWING NUMBER		SHEET
5027556		52
DATE	REV.	NEXT SHEET
2005-05-16	A	53

Downloaded from www.Manualslib.com manuals search engine

THIS DRAWING CONTAINS CONFIDENTIAL INFORMATION AND REMAINS THE PROPERTY OF GETINGE DISINFECTION AB WITHOUT WHOSE PERMISSION IT MAY NOT BE COPIED, SHOWN OR HANDED TO A THIRD PART OR USED AT THE BASIS OF ALTERNATE DESIGNS

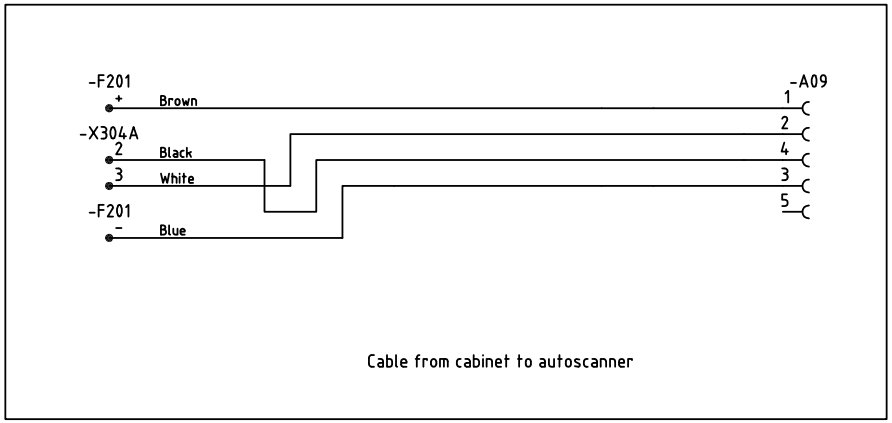

Cable from cabinet to autoscanner

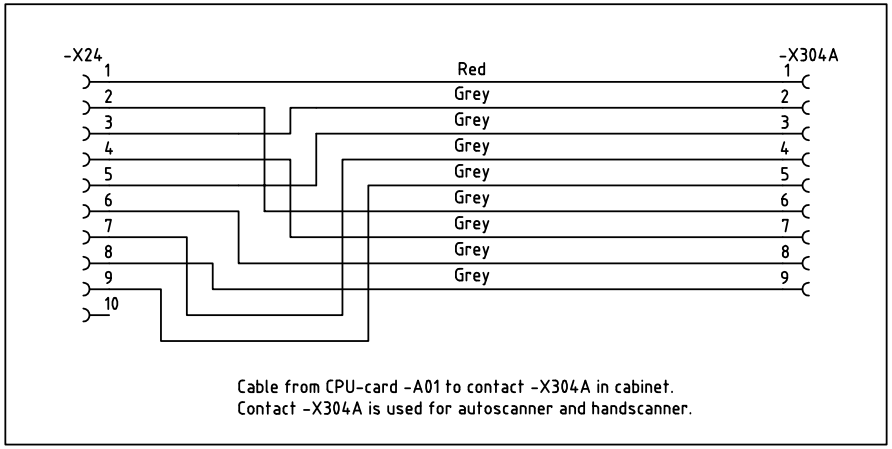

Cable from CPU-card -A01 to contact -X304A in cabinet.
Contact -X304A is used for autoscanner and handscanner.

DRAWN BY	CHECKED BY (GETINGE)	APPROVAL (GETINGE)	DATE (APP.)	PROJECT NUMBER
MHn	JSn	JSn	2006-01-02	

GETINGE
GETINGE DISINFECTION
P.O. BOX 1505
SE 352 15 VÄXJÖ
SWEDEN

UTENSIL WASHER TYPE 88-5 EL
CIRCUIT DIAGRAM, MON. SYSTEM
CABLES, AUTOSCANNER

DRAWING NUMBER		SHEET
5027556		53
DATE	REV.	NEXT SHEET
2005-05-16	A	54

A	PU06-0122	HS	070816
REV:	NOTE:	SIGN.	DATE:

Downloaded from www.Manualslib.com manuals search engine

THIS DRAWING CONTAINS CONFIDENTIAL INFORMATION AND REMAINS THE PROPERTY OF GETINGE DISINFECTION AB WITHOUT WHOSE PERMISSION IT MAY NOT BE COPIED, SHOWN OR HANDED TO A THIRD PART OR USED AT THE BASIS OF ALTERNATE DESIGNS

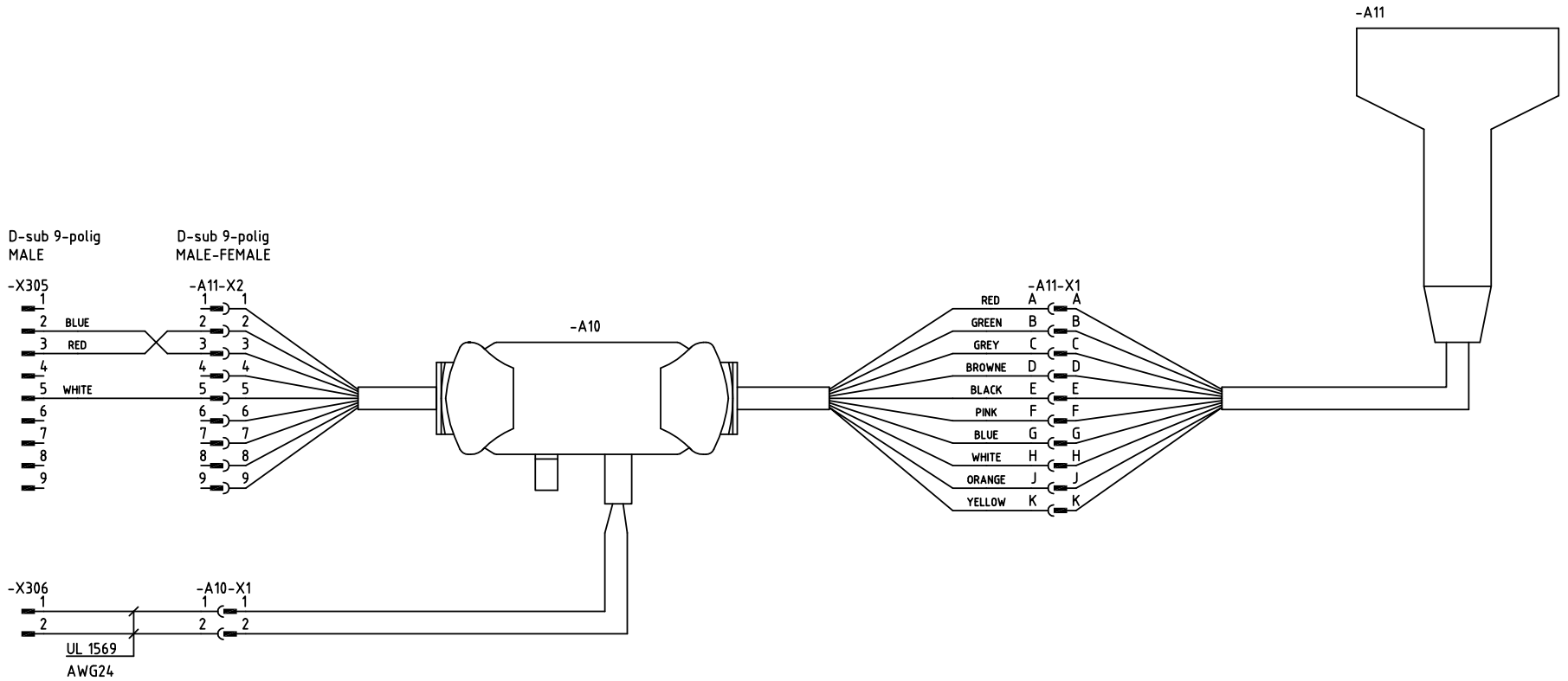

A	PU06-0122	HS	070816
REV:	NOTE:	SIGN.	DATE:

DRAWN BY	CHECKED BY (GETINGE)	APPROVAL (GETINGE)	DATE (APP.)	PROJECT NUMBER
MHn	JSn	JSn	2006-01-02	

GETINGE
GETINGE DISINFECTION
P.O. BOX 1505
SE 352 15 VÄXJÖ
SWEDEN

UTENSIL WASHER TYPE 88-5 EL
CIRCUIT DIAGRAM, MON. SYSTEM
CABLE, HANDSCANNER

DRAWING NUMBER		SHEET
5027556		54
DATE	REV.	NEXT SHEET
2005-05-16	A	55

Downloaded from www.Manualslib.com manuals search engine

THIS DRAWING CONTAINS CONFIDENTIAL INFORMATION AND REMAINS THE PROPERTY OF GETINGE DISINFECTION AB WITHOUT WHOSE PERMISSION IT MAY NOT BE COPIED, SHOWN OR HANDED TO A THIRD PART OR USED AT THE BASIS OF ALTERNATE DESIGNS

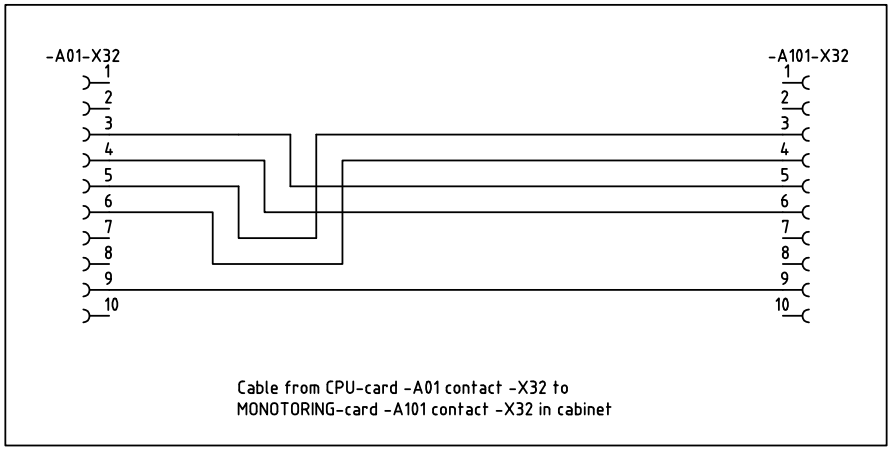

Cable from CPU-card -A01 contact -X32 to
MONOTORING-card -A101 contact -X32 in cabinet

A	PU06-0122	HS	070816
REV:	NOTE:	SIGN.	DATE:

DRAWN BY	CHECKED BY (GETINGE)	APPROVAL (GETINGE)	DATE (APP.)	PROJECT NUMBER
MHn	JSn	JSn	2006-01-02	

GETINGE
GETINGE DISINFECTION
P.O. BOX 1505
SE 352 15 VÄXJÖ
SWEDEN

UTENSIL WASHER TYPE 88-5 EL
CIRCUIT DIAGRAM, MON. SYSTEM
COMMUNICATION PACS MON. SYS

DRAWING NUMBER		SHEET
5027556		55
DATE	REV.	NEXT SHEET
2005-05-16	A	101

Downloaded from www.Manualslib.com manuals search engine

THIS DRAWING CONTAINS CONFIDENTIAL INFORMATION AND REMAINS THE PROPERTY OF GETINGE DISINFECTION AB WITHOUT WHOSE PERMISSION IT MAY NOT BE COPIED, SHOWN OR HANDED TO A THIRD PART OR USED AT THE BASIS OF ALTERNATE DESIGNS

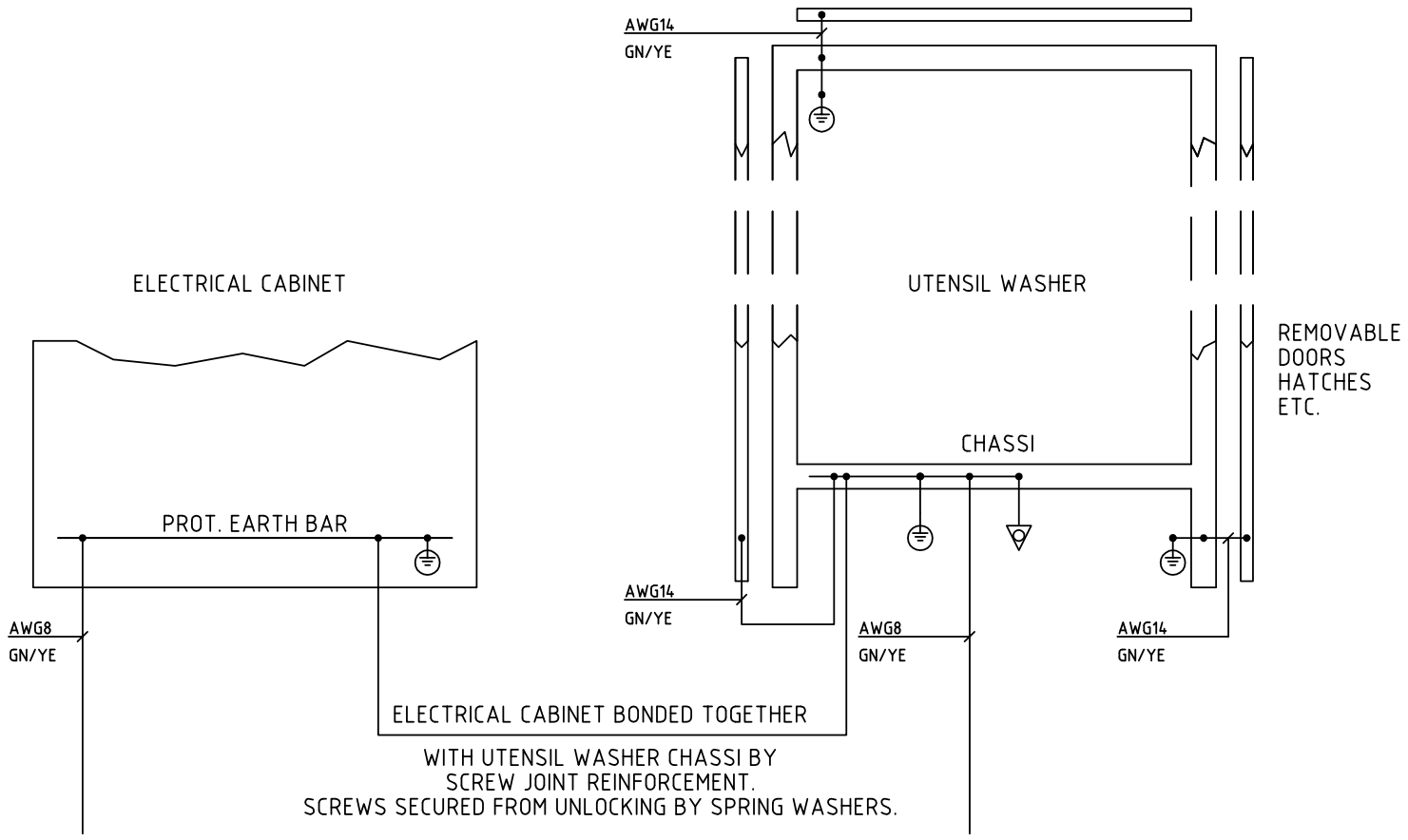

EXTERNAL PROTECTIVE EARTH CONDUCTOR
FROM POWER DISTRIBUTION

EXTERNAL EQUAL POTENTIAL BONDING CONDUCTOR
FROM EQUAL POTENTIAL BONDING BAR

ALL CONNECTIONS TO
PROTECTIVE EARTH SYSTEM
SHALL BE MARKED WITH
FOLLOWING SYMBOL

DRAWN BY	CHECKED BY (GETINGE)	APPROVAL (GETINGE)	DATE (APP.)
MHn	JSn	JSn	2006-01-02

PROJECT NUMBER

GETINGE
GETINGE DISINFECTION
P.O. BOX 1505
SE 352 15 VÄXJÖ
SWEDEN

UTENSIL WASHER TYPE 88-5 EL
CIRCUIT DIAGRAM, MON. SYSTEM
PROTECTIVE BONDING CIRCUIT

DRAWING NUMBER		SHEET
5027556		101
DATE	REV.	NEXT SHEET
2005-05-16	A	-

A	PU06-0122	HS	070816
REV:	NOTE:	SIGN.	DATE:

Downloaded from www.Manualslib.com manuals search engine

THIS DRAWING CONTAINS CONFIDENTIAL INFORMATION AND REMAINS THE PROPERTY OF GETINGE DISINFECTION AB WITHOUT WHOSE PERMISSION IT MAY NOT BE COPIED, SHOWN OR HANDED TO A THIRD PART OR USED AT THE BASIS OF ALTERNATE DESIGNS

CONTENTS OF DRAWINGS

SHEET	DESCRIPTION	REVISION	NOTE	SHEET	DESCRIPTION	REVISION	NOTE
2	ELECTRICAL CABINET LEFT SIDE	A	380-415V, 50-60Hz, 3+N+PE	54	CABLE, HANDSCANNER	A	
3	POWER SUPPLY, MAIN CIRCUITS	A		101	PROTECTIVE BONDING CIRCUIT	A	
4	MAIN CIRCUITS	A					
5	CONTROL VOLTAGE, 230VAC	A					
6	CONTROL VOLTAGE, 24VDC	A					
7	CONTROL VOLTAGE, 5VDC	A					
8	CONTROL SYSTEM, PACS300	A					
9	MAIN BOARD, AI00-AI07	A					
10	MAIN BOARD, DI00-DI07	A					
11	MAIN BOARD, DI08-DI15	A					
12	MAIN BOARD, DO00-DO08	A					
13	MAIN BOARD, DO09-DO17	A					
14	EXPANSION CARD #1, DI16-DI21	A					
15	EXPANSION CARD #1, DO18-DO25, AO01	A					
16	EXPANSION CARD #2, DI22-DI27	A					
17	EXPANSION CARD #2, DO26-DO33, AO02	A					
18	EXPANSION CARD #3, DI28-DI33	A					
19	EXPANSION CARD #3, DO34-DO41, AO03	A					
20	EXPANSION CARD #4, DI34-DI39	A					
21	EXPANSION CARD #4, DO42-DO49, AO04	A					
22	HARDWARE INTERLOCKS	A					
23	AGS SIGNALS	A					
24	DOSING PUMPS	A					
51	CABLES, PANEL CS AND SS	A					
52	CABLES, PRINTER	A					
53	CABLES, AUTOSCANNER	A					

DRAWN BY	CHECKED BY (GETINGE)	APPROVAL (GETINGE)	DATE (APP.)	PROJECT NUMBER
MHn	JSn	JSn	2006-01-02	

GETINGE
GETINGE DISINFECTION
P.O. BOX 1505
SE 352 15 VAXJO
SWEDEN

UTENSIL WASHER TYPE 88-5 ST
CIRCUIT DIAGRAM
CONTENTS OF DRAWINGS

DRAWING NUMBER	SHEET
5027557	1
DATE / REV.	NEXT SHEET
2005-05-16 / A	2

REV:	NOTE:	SIGN.	DATE:
A	PU06-0122	HS	070816

Downloaded from www.Manualslib.com manuals search engine

THIS DRAWING CONTAINS CONFIDENTIAL INFORMATION AND REMAINS THE PROPERTY OF GETINGE DISINFECTION AB WITHOUT WHOSE PERMISSION IT MAY NOT BE COPIED, SHOWN OR HANDED TO A THIRD PART OR USED AT THE BASIS OF ALTERNATE DESIGNS

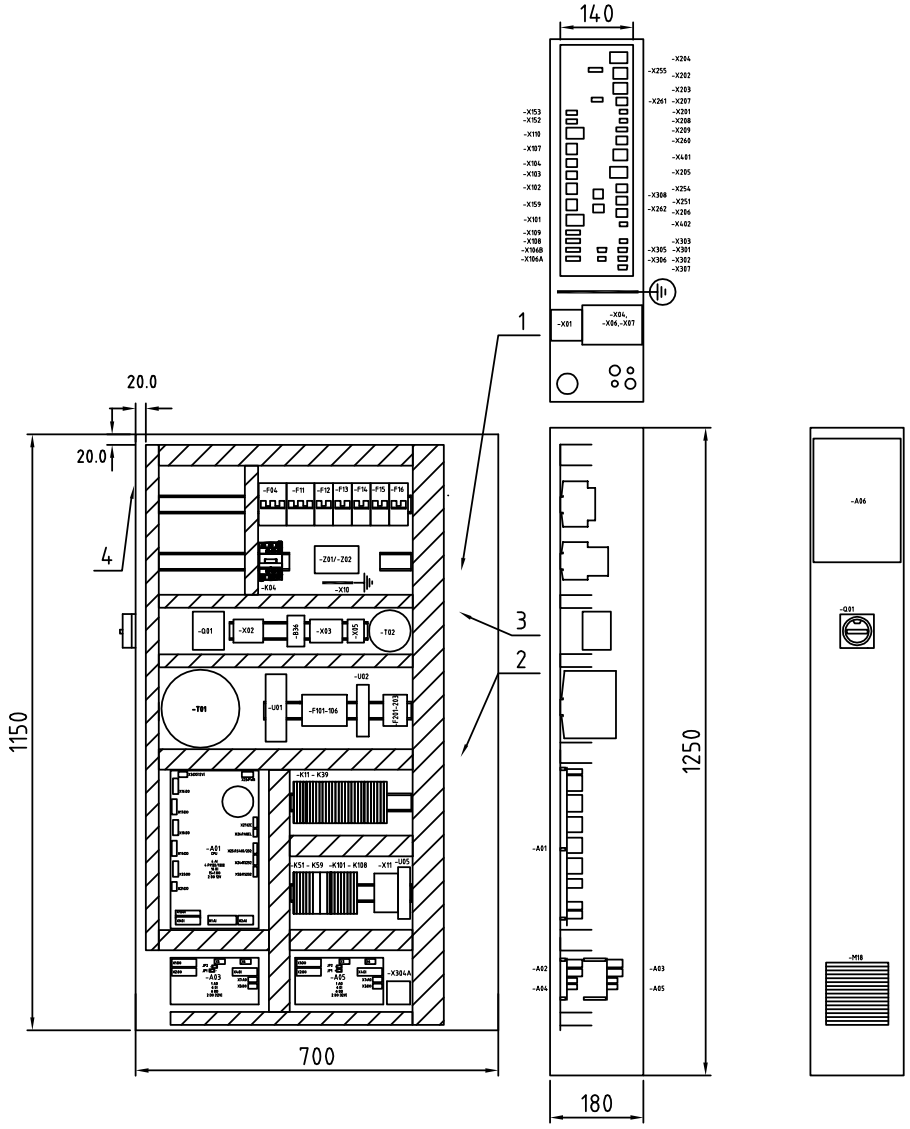

FOLLOWING COMPONENTS ARE OPTIONS:

-T01
-U02
-U05

WIRES USED IN MACHINE:

ACCORDING TO UL STYLE 1015, 600V 105C.
IF OTHER TYPE OF WIRE IS USED THIS IS SPECIFIED IN THE WIRING DIAGRAMS.

1) Connection point for power circuit.

2) Connection point for control voltage.

3) Label with fuse terminal description (5024156-00).

4) Label with manufacturers approval of electrical cabinet.

DRAWN BY	CHECKED BY (GETINGE)	APPROVAL (GETINGE)	DATE (APP.)	PROJECT NUMBER
MHn	JSn	JSn	2006-01-02	

GETINGE
GETINGE DISINFECTION
P.O. BOX 1505
SE 352 15 VAXJO
SWEDEN

UTENSIL WASHER TYPE 88-5 ST
ELECTRICAL CABINET LEFT SIDE
STEAM HEATED

DRAWING NUMBER	SHEET
5027557	2
DATE / REV.	NEXT SHEET
2005-05-16 / A	3

REV:	NOTE:	SIGN.	DATE:
A	PU06-0122	HS	070816

Downloaded from www.Manualslib.com manuals search engine

THIS DRAWING CONTAINS CONFIDENTIAL INFORMATION AND REMAINS THE PROPERTY OF GETINGE DISINFECTION AB WITHOUT WHOSE PERMISSION IT MAY NOT BE COPIED, SHOWN OR HANDED TO A THIRD PART OR USED AT THE BASIS OF ALTERNATE DESIGNS

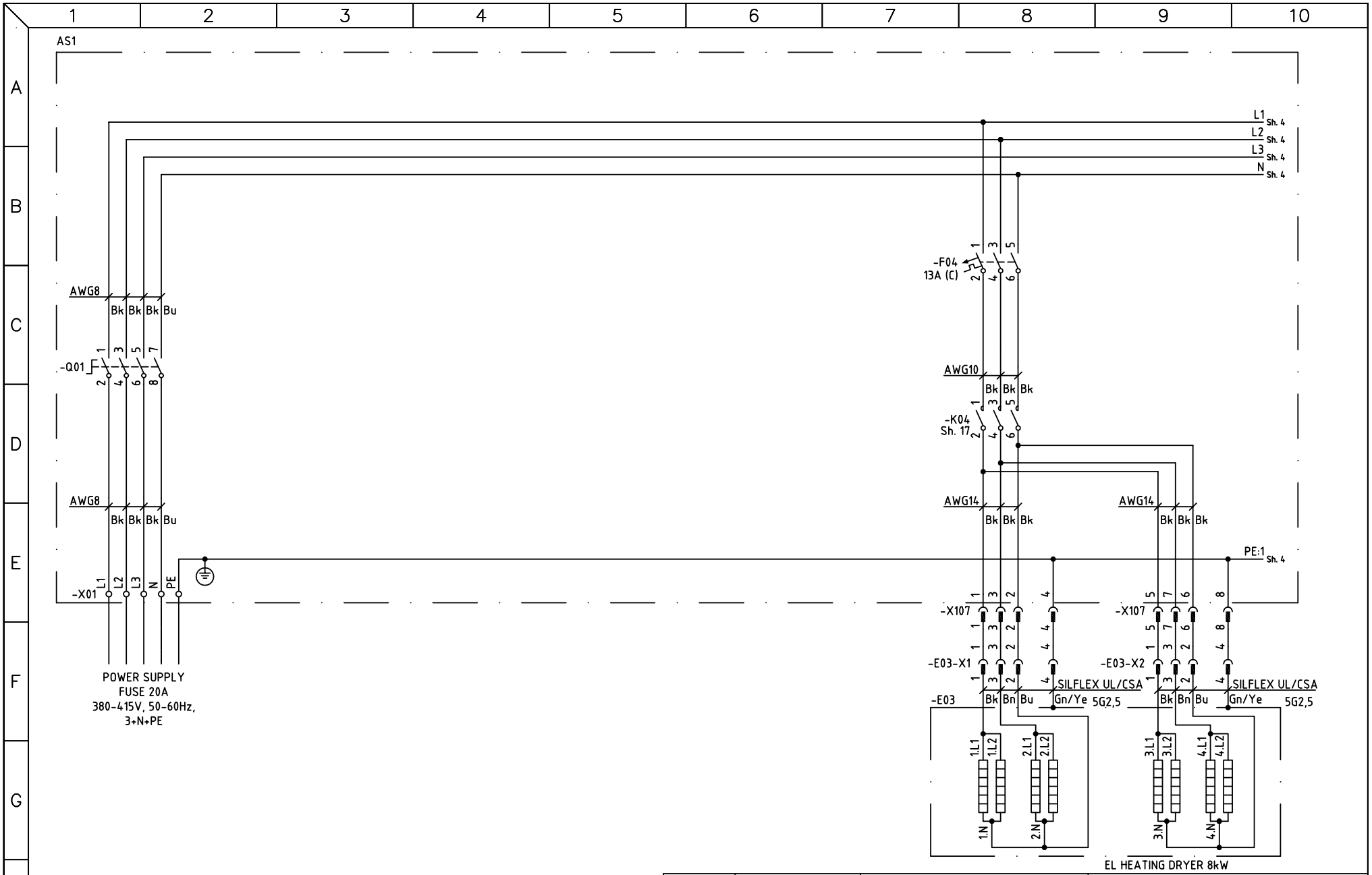

DRAWN BY	CHECKED BY (GETINGE)	APPROVAL (GETINGE)	DATE (APP.)	PROJECT NUMBER
MHn	JSn	JSn	2006-01-02	

GETINGE
GETINGE DISINFECTION
P.O. BOX 1505
SE 352 15 VAXJO
SWEDEN

UTENSIL WASHER TYPE 88-5 ST
CIRCUIT DIAGRAM
MAIN CIRCUIT

DRAWING NUMBER	SHEET
5027557	3
DATE / REV.	NEXT SHEET
2005-05-16 / A	4

REV:	NOTE:	SIGN.	DATE:
A	PU06-0122	HS	070816

Downloaded from www.Manualslib.com manuals search engine

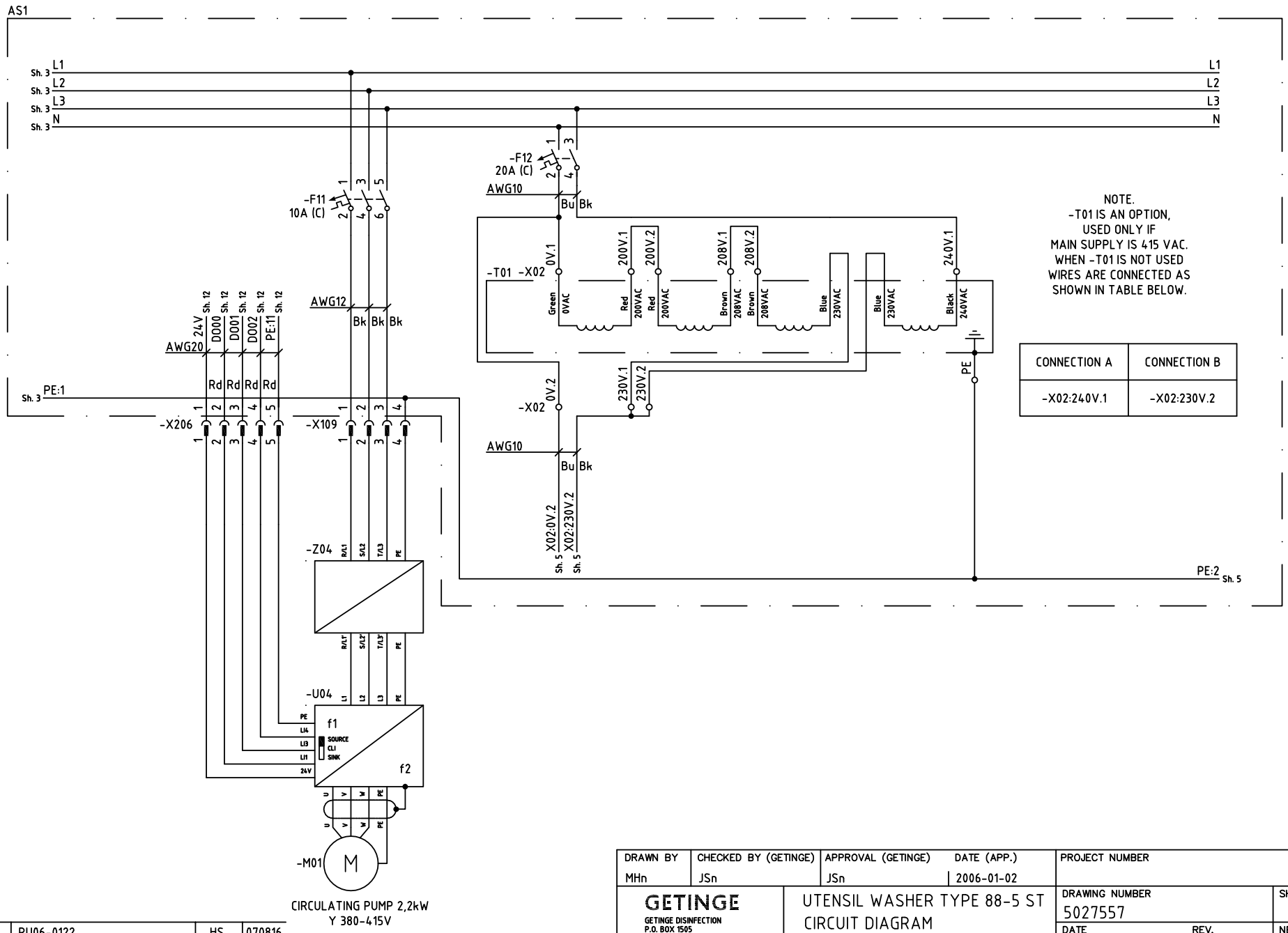

NOTE.
-T01 IS AN OPTION,
USED ONLY IF
MAIN SUPPLY IS 415 VAC.
WHEN -T01 IS NOT USED
WIRES ARE CONNECTED AS
SHOWN IN TABLE BELOW.

CONNECTION A	CONNECTION B
-X02:240V.1	-X02:230V.2

A	PU06-0122	HS	070816
REV:	NOTE:	SIGN.	DATE:

DRAWN BY	CHECKED BY (GETINGE)	APPROVAL (GETINGE)	DATE (APP.)	PROJECT NUMBER
MHn	JSn	JSn	2006-01-02	

GETINGE
GETINGE DISINFECTION
P.O. BOX 1505
SE 352 15 VAXJO
SWEDEN

UTENSIL WASHER TYPE 88-5 ST
CIRCUIT DIAGRAM
MAIN CIRCUIT

DRAWING NUMBER	SHEET
5027557	4
DATE / REV.	NEXT SHEET
2005-05-16 / A	5

Downloaded from www.Manualslib.com manuals search engine

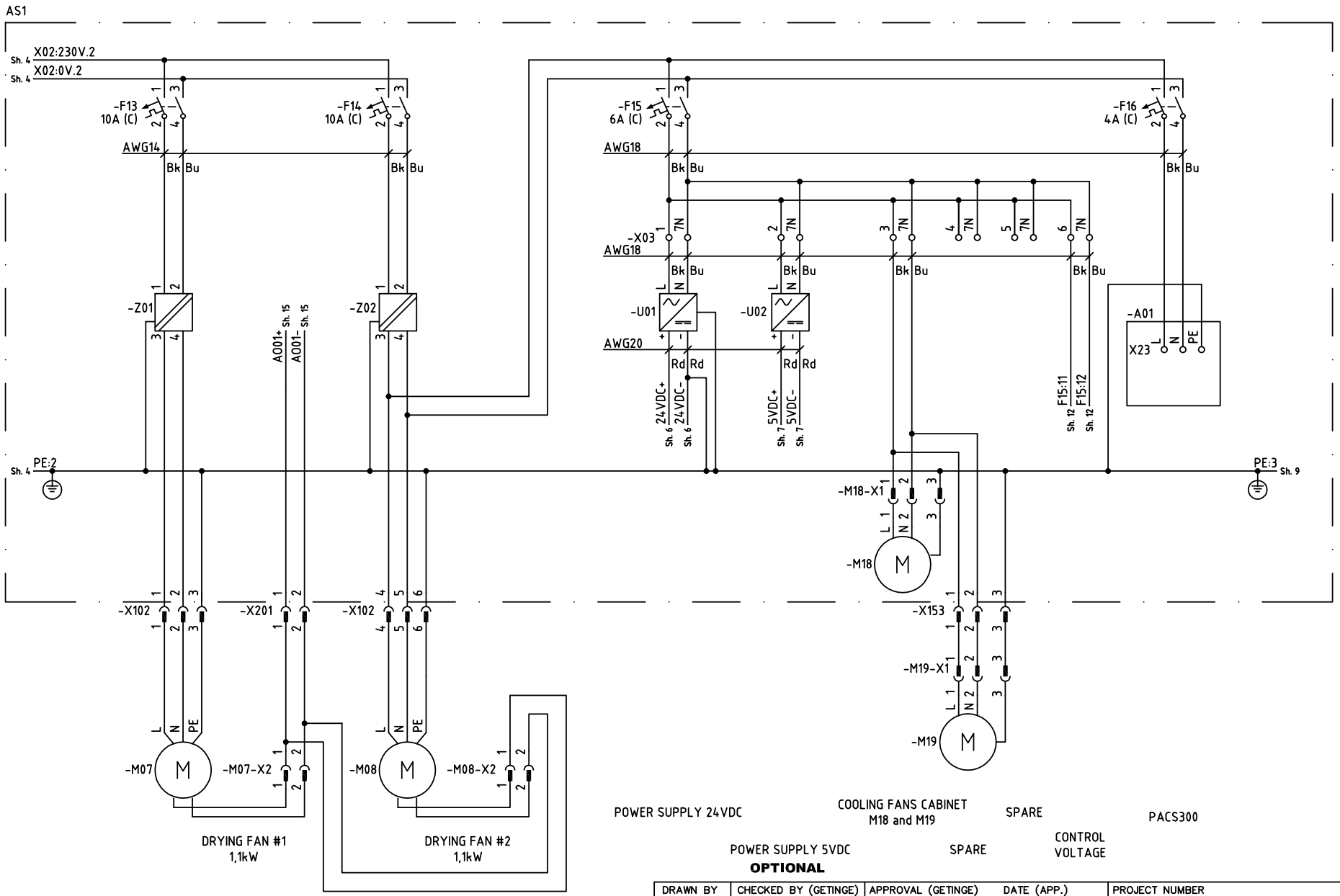

DRAWN BY	CHECKED BY (GETINGE)	APPROVAL (GETINGE)	DATE (APP.)	PROJECT NUMBER
MHn	JSn	JSn	2006-01-02	

GETINGE
GETINGE DISINFECTION
P.O. BOX 1505
SE 352 15 VAXJO
SWEDEN

UTENSIL WASHER TYPE 88-5 ST
CIRCUIT DIAGRAM
230VAC

DRAWING NUMBER	SHEET
5027557	5
DATE / REV.	NEXT SHEET
2005-05-16 / A	6

REV:	NOTE:	SIGN.	DATE:
A	PU06-0122	HS	070816

Downloaded from www.Manualslib.com manuals search engine

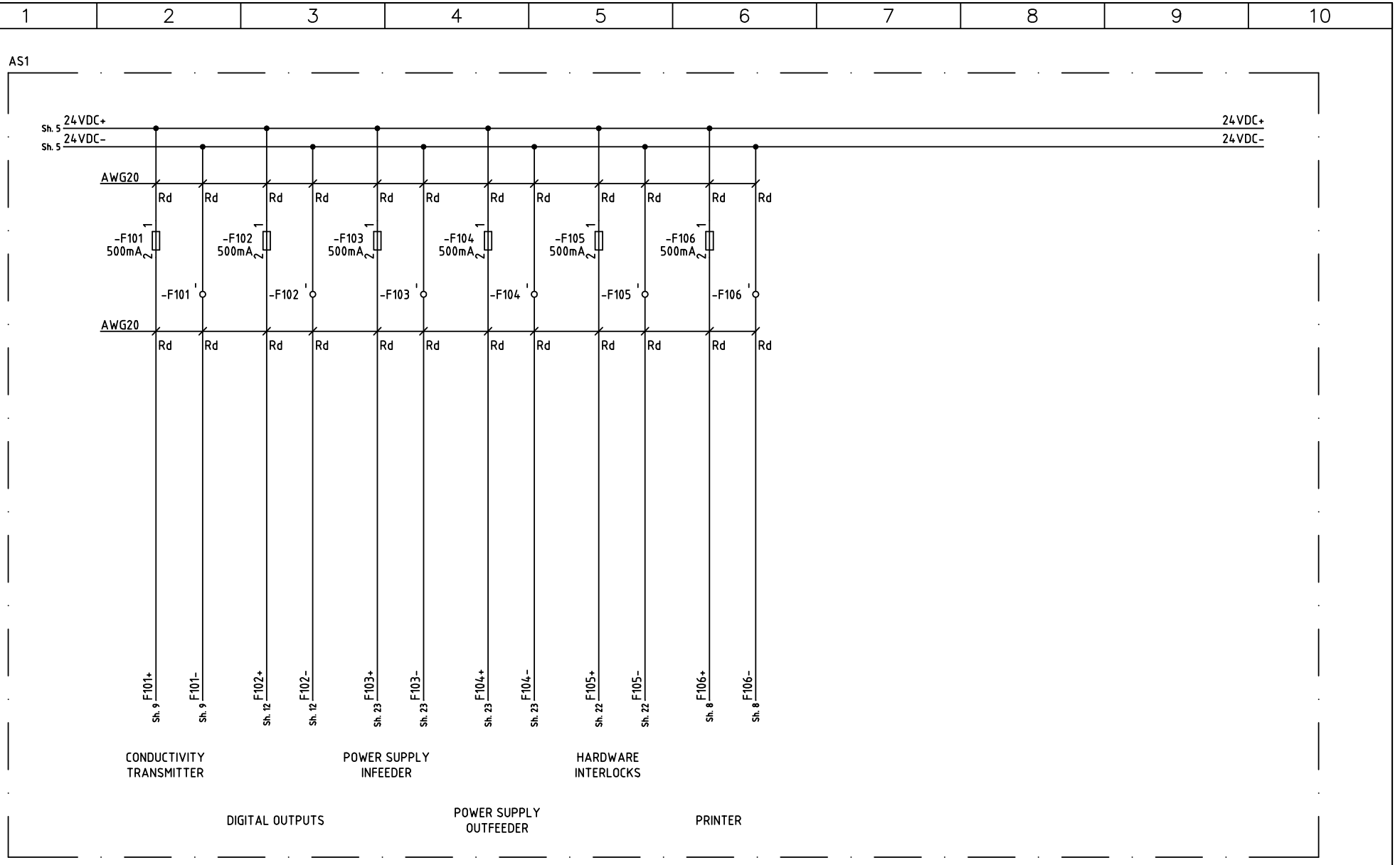

DRAWN BY	CHECKED BY (GETINGE)	APPROVAL (GETINGE)	DATE (APP.)	PROJECT NUMBER
MHn	JSn	JSn	2006-01-02	

GETINGE
GETINGE DISINFECTION
P.O. BOX 1505
SE 352 15 VAXJO
SWEDEN

UTENSIL WASHER TYPE 88-5 ST
CIRCUIT DIAGRAM
24VDC

DRAWING NUMBER	SHEET
5027557	6
DATE / REV.	NEXT SHEET
2005-05-16 / A	7

A	PU06-0122	HS	070816
REV:	NOTE:	SIGN.	DATE:

Downloaded from www.Manualslib.com manuals search engine

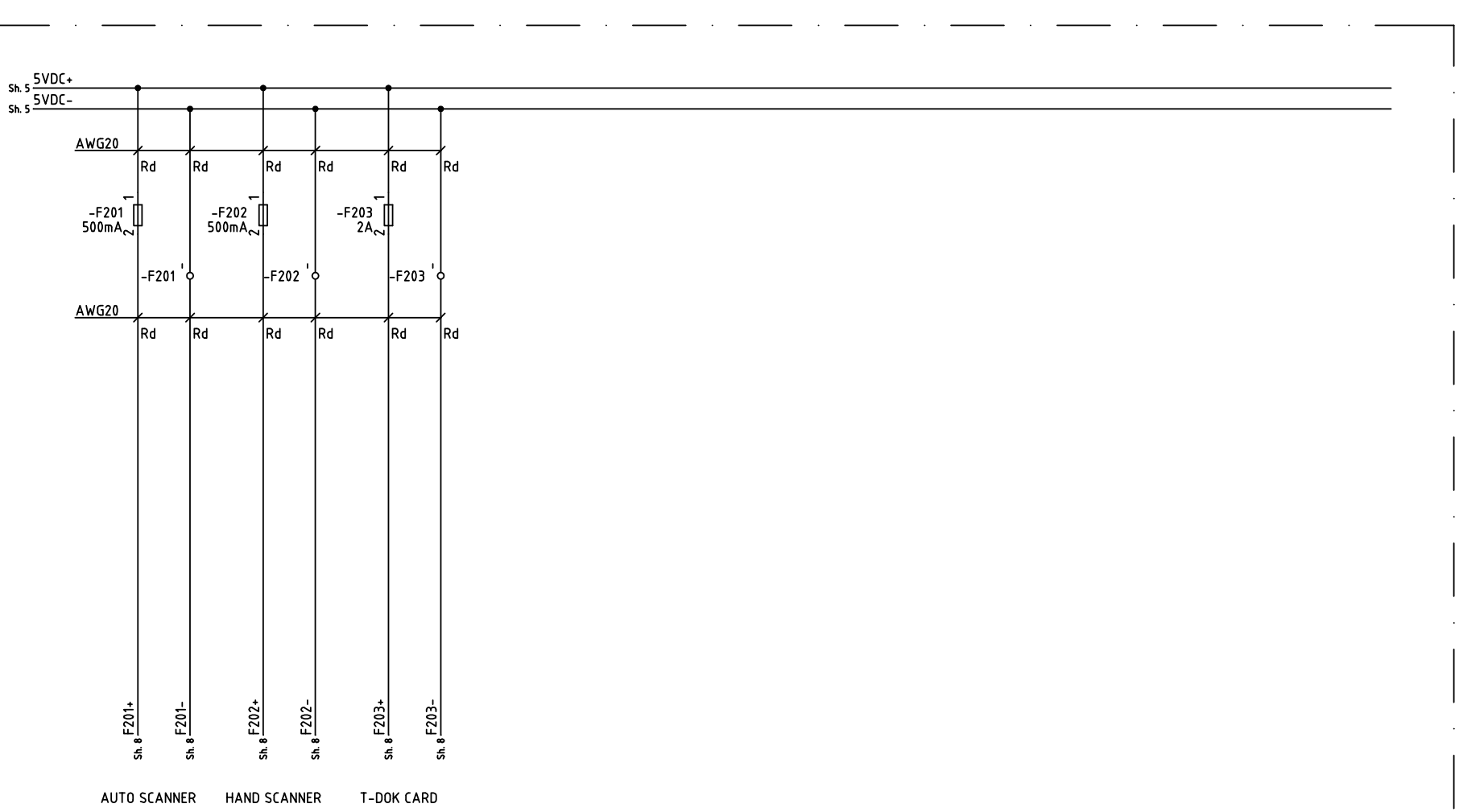

DRAWN BY	CHECKED BY (GETINGE)	APPROVAL (GETINGE)	DATE (APP.)	PROJECT NUMBER
MHn	JSn	JSn	2006-01-02	

GETINGE
GETINGE DISINFECTION
P.O. BOX 1505
SE 352 15 VAXJO
SWEDEN

UTENSIL WASHER TYPE 88-5 ST
CIRCUIT DIAGRAM
5VDC

DRAWING NUMBER	SHEET
5027557	7
DATE / REV.	NEXT SHEET
2005-05-16 / A	8

REV:	NOTE:	SIGN.	DATE:
A	PU06-0122	HS	070816

Downloaded from www.Manualslib.com manuals search engine

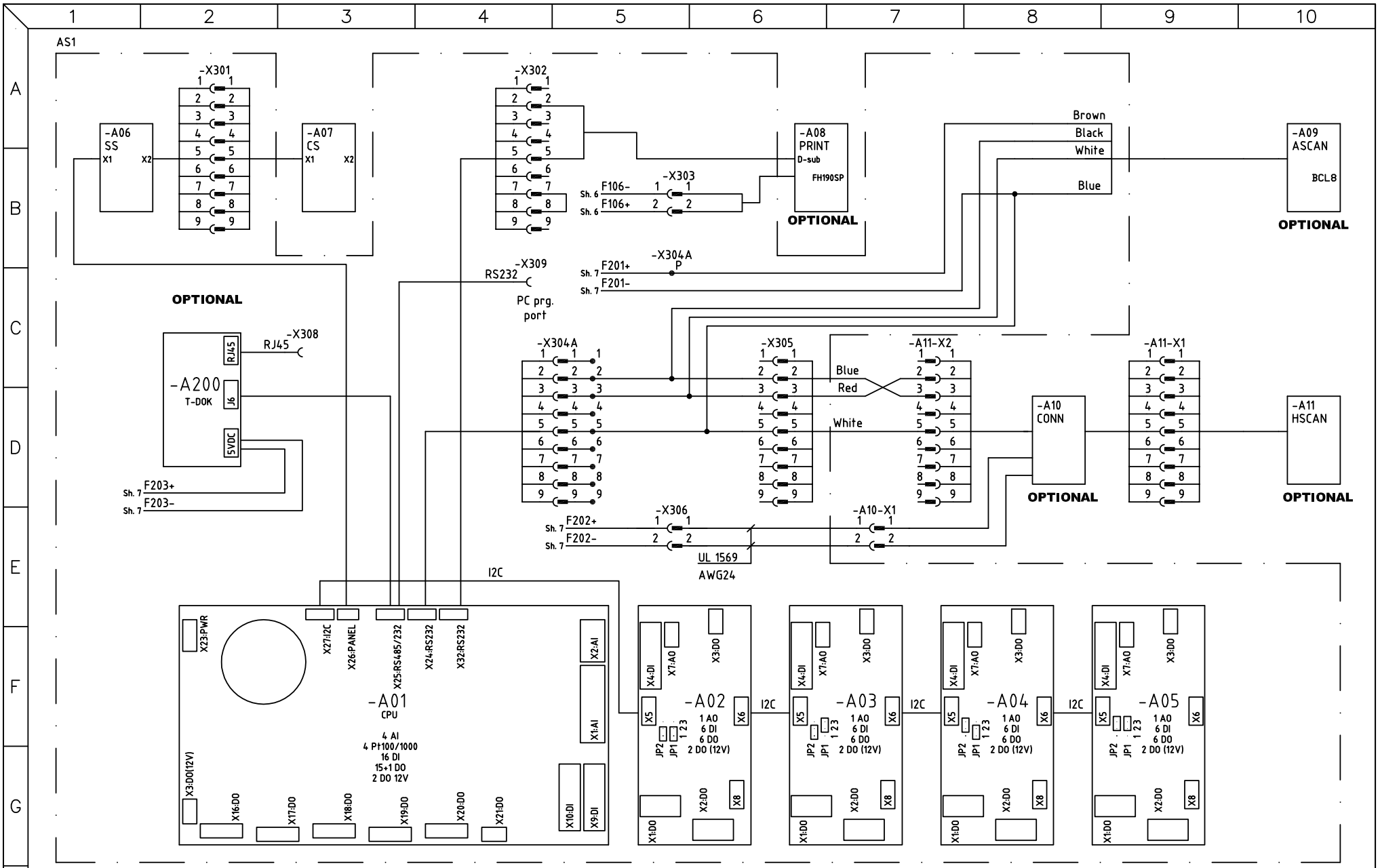

DRAWN BY	CHECKED BY (GETINGE)	APPROVAL (GETINGE)	DATE (APP.)	PROJECT NUMBER
MHn	JSn	JSn	2006-01-02	

GETINGE
GETINGE DISINFECTION
P.O. BOX 1505
SE 352 15 VAXJO
SWEDEN

UTENSIL WASHER TYPE 88-5 ST
CIRCUIT DIAGRAM
PACS300

DRAWING NUMBER	SHEET
5027557	8
DATE / REV.	NEXT SHEET
2005-05-16 / A	9

A	PU06-0122	HS	070816
REV:	NOTE:	SIGN.	DATE:

Downloaded from www.Manualslib.com manuals search engine

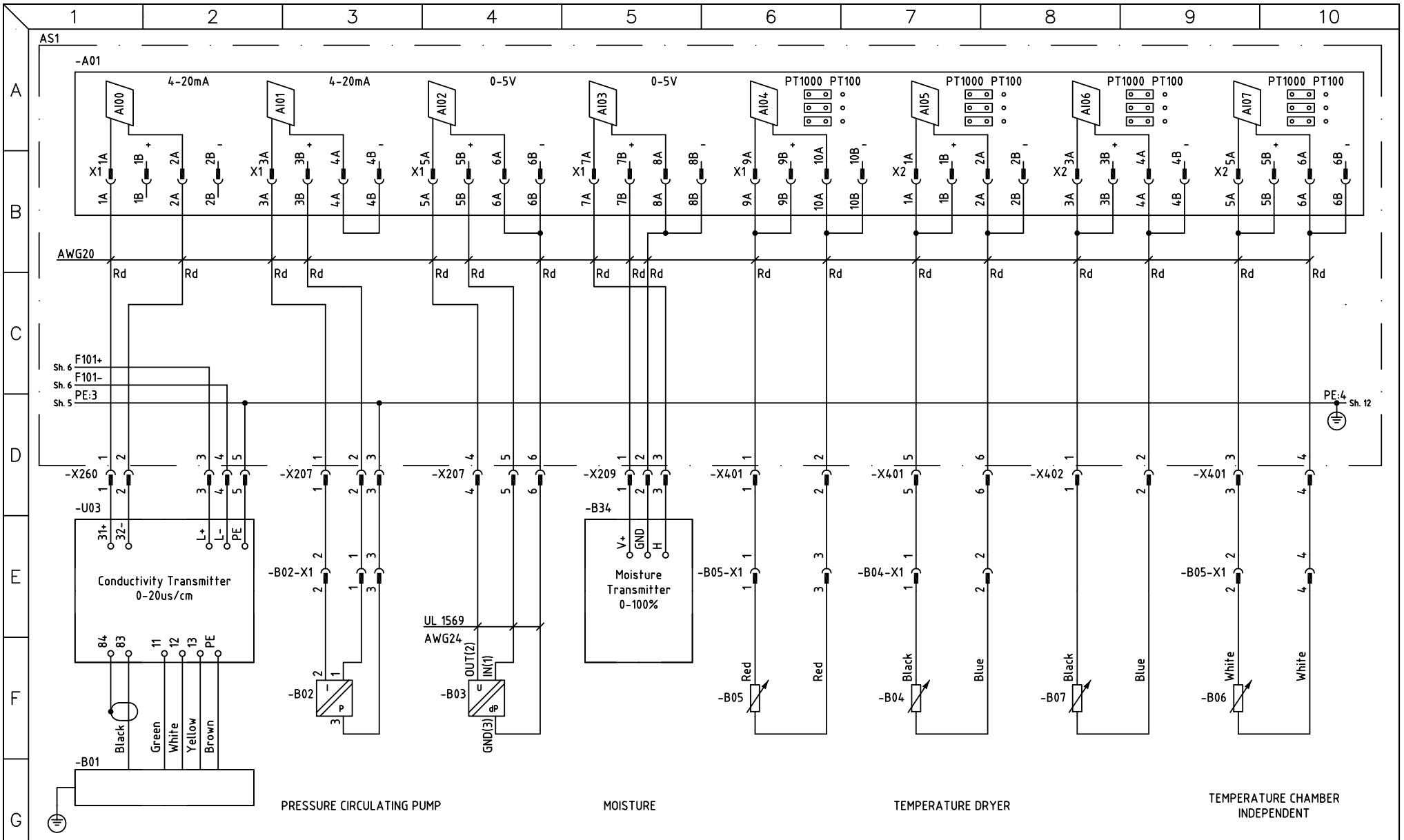

DRAWN BY	CHECKED BY (GETINGE)	APPROVAL (GETINGE)	DATE (APP.)	PROJECT NUMBER
MHn	JSn	JSn	2006-01-02	

GETINGE
GETINGE DISINFECTION
P.O. BOX 1505
SE 352 15 VAXJO
SWEDEN

UTENSIL WASHER TYPE 88-5 ST
CIRCUIT DIAGRAM
AI00-AI07

DRAWING NUMBER	SHEET
5027557	9
DATE / REV.	NEXT SHEET
2005-05-16 / A	10

A	PU06-0122	HS	070816
REV:	NOTE:	SIGN.	DATE:

Downloaded from www.Manualslib.com manuals search engine

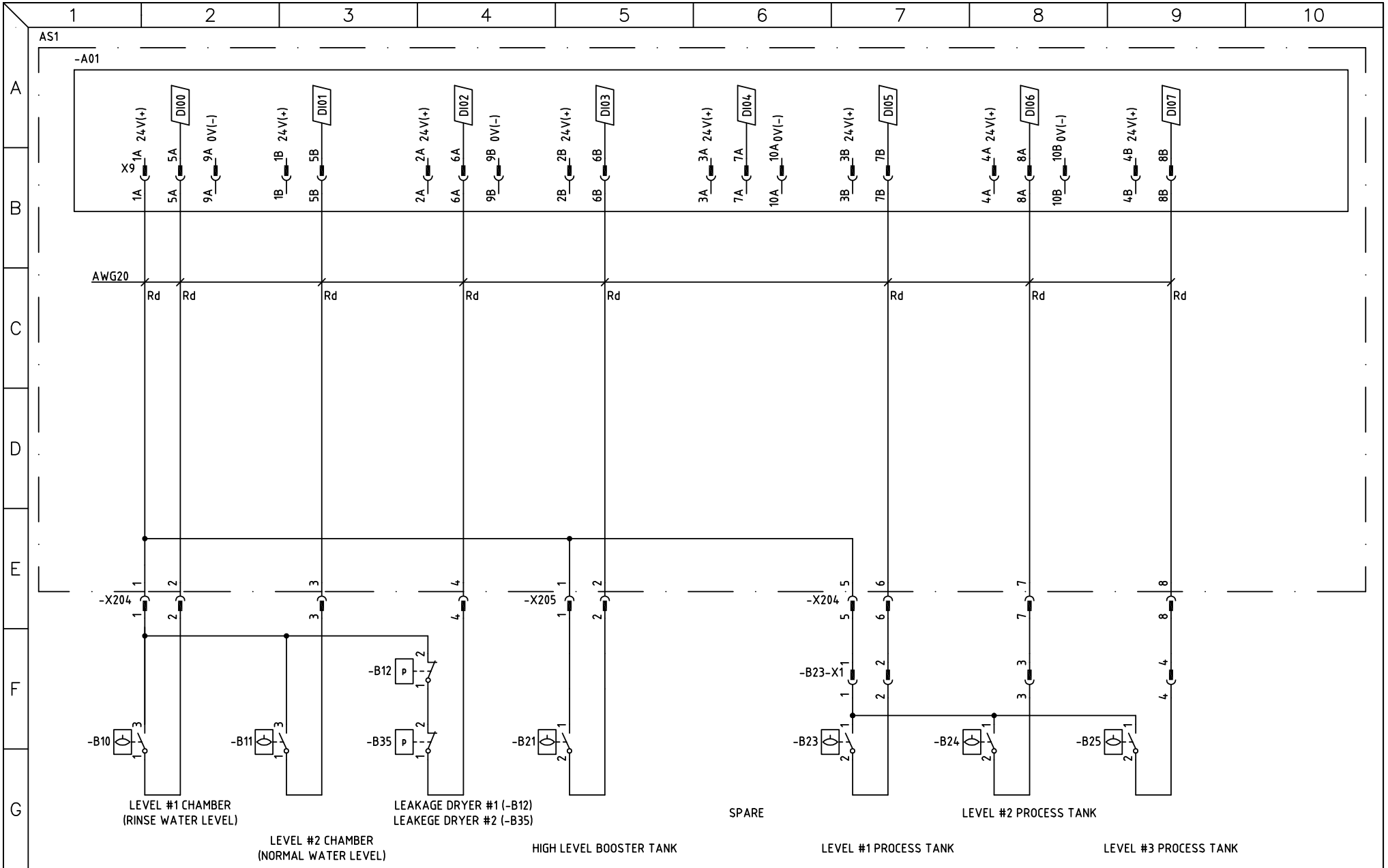

DRAWN BY	CHECKED BY (GETINGE)	APPROVAL (GETINGE)	DATE (APP.)	PROJECT NUMBER
MHn	JSn	JSn	2006-01-02	

GETINGE
GETINGE DISINFECTION
P.O. BOX 1505
SE 352 15 VAXJO
SWEDEN

UTENSIL WASHER TYPE 88-5 ST
CIRCUIT DIAGRAM
DI00-DI07

DRAWING NUMBER	SHEET
5027557	10
DATE / REV.	NEXT SHEET
2005-05-16 / A	11

A	PU06-0122	HS	070816
REV:	NOTE:	SIGN.	DATE:

Downloaded from www.Manualslib.com manuals search engine

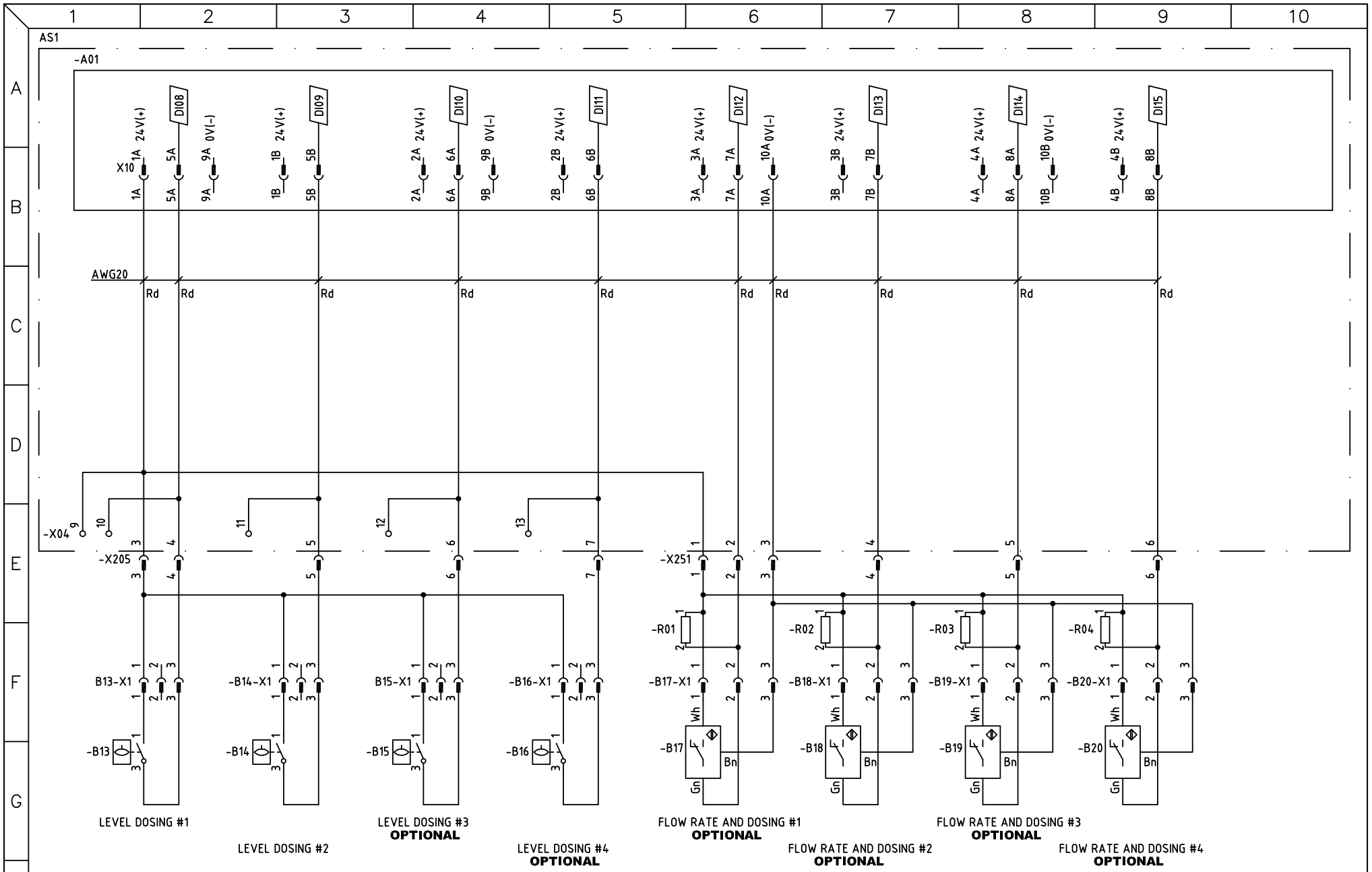

DRAWN BY	CHECKED BY (GETINGE)	APPROVAL (GETINGE)	DATE (APP.)	PROJECT NUMBER
MHn	JSn	JSn	2006-01-02	

GETINGE
GETINGE DISINFECTION
P.O. BOX 1505
SE 352 15 VAXJO
SWEDEN

UTENSIL WASHER TYPE 88-5 ST
CIRCUIT DIAGRAM
DI08-DI15

DRAWING NUMBER	SHEET
5027557	11
DATE / REV.	NEXT SHEET
2005-05-16 / A	12

A	PU06-0122	HS	070816
REV:	NOTE:	SIGN.	DATE:

Downloaded from www.Manualslib.com manuals search engine

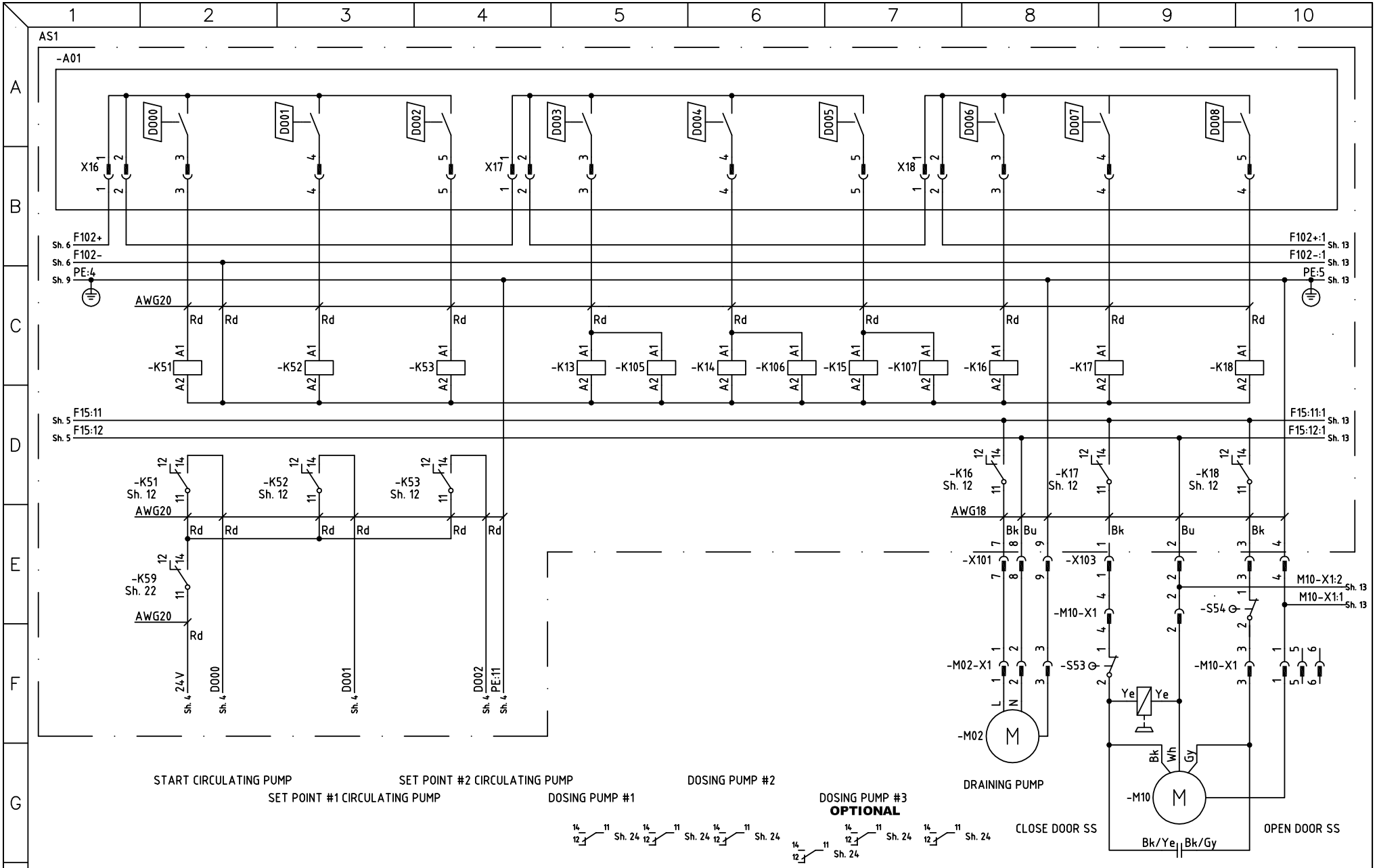

DRAWN BY	CHECKED BY (GETINGE)	APPROVAL (GETINGE)	DATE (APP.)	PROJECT NUMBER
MHn	JSn	JSn	2006-01-02	

GETINGE
GETINGE DISINFECTION
P.O. BOX 1505
SE 352 15 VAXJO
SWEDEN

UTENSIL WASHER TYPE 88-5 ST
CIRCUIT DIAGRAM
D000-D008

DRAWING NUMBER	SHEET
5027557	12
DATE / REV.	NEXT SHEET
2005-05-16 / A	13

A	PU06-0122	HS	070816
REV:	NOTE:	SIGN.	DATE:

Downloaded from www.Manualslib.com manuals search engine

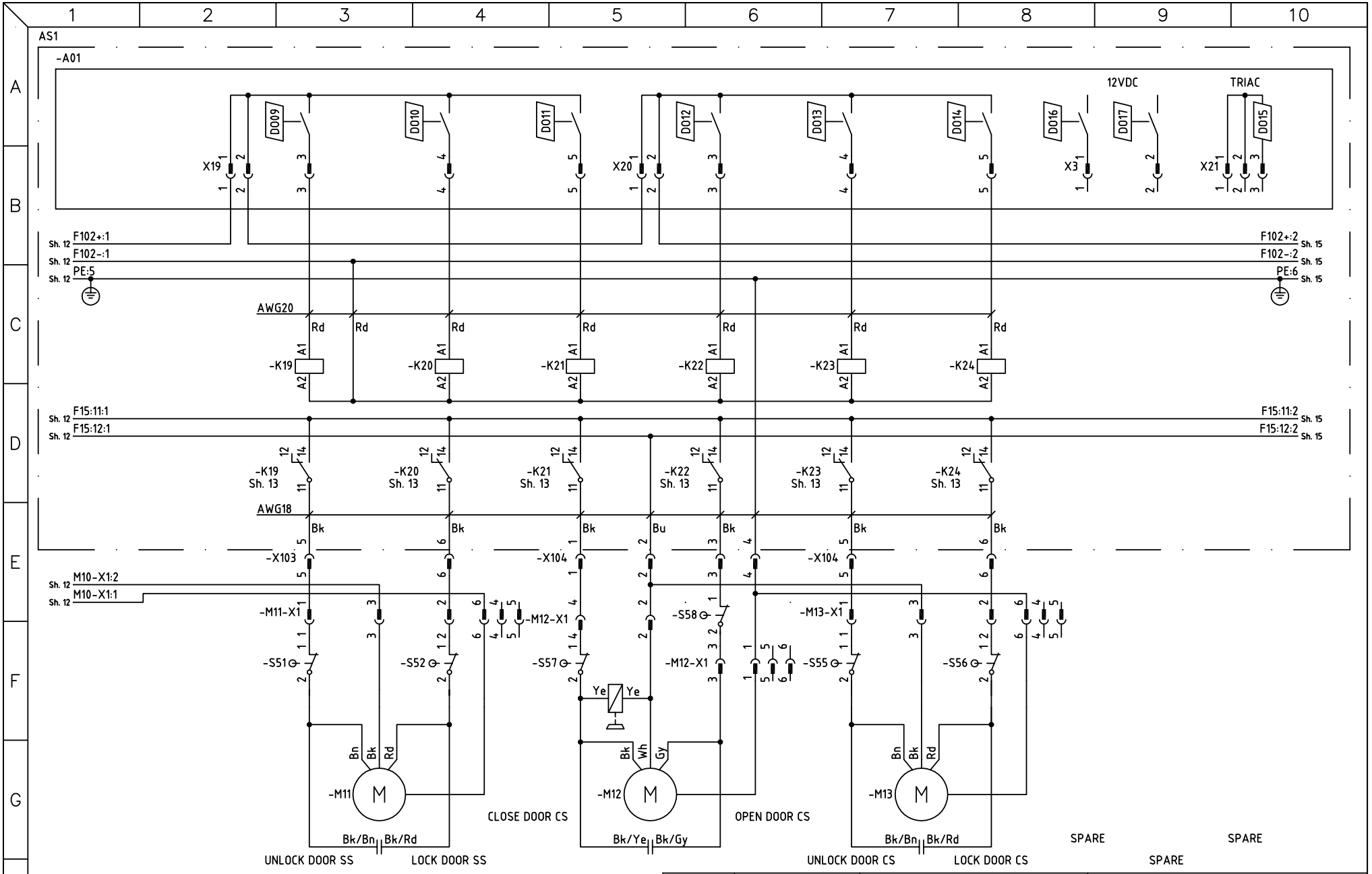

DRAWN BY	CHECKED BY (GETINGE)	APPROVAL (GETINGE)	DATE (APP.)	PROJECT NUMBER
MHn	JSn	JSn	2006-01-02	

GETINGE
GETINGE DISINFECTION
P.O. BOX 1505
SE 352 15 VAXJO
SWEDEN

UTENSIL WASHER TYPE 88-5 ST
CIRCUIT DIAGRAM
D009-D017

DRAWING NUMBER	SHEET
5027557	13
DATE / REV.	NEXT SHEET
2005-05-16 / A	14

A	PU06-0122	HS	070816
REV:	NOTE:	SIGN.	DATE:

Downloaded from www.Manualslib.com manuals search engine

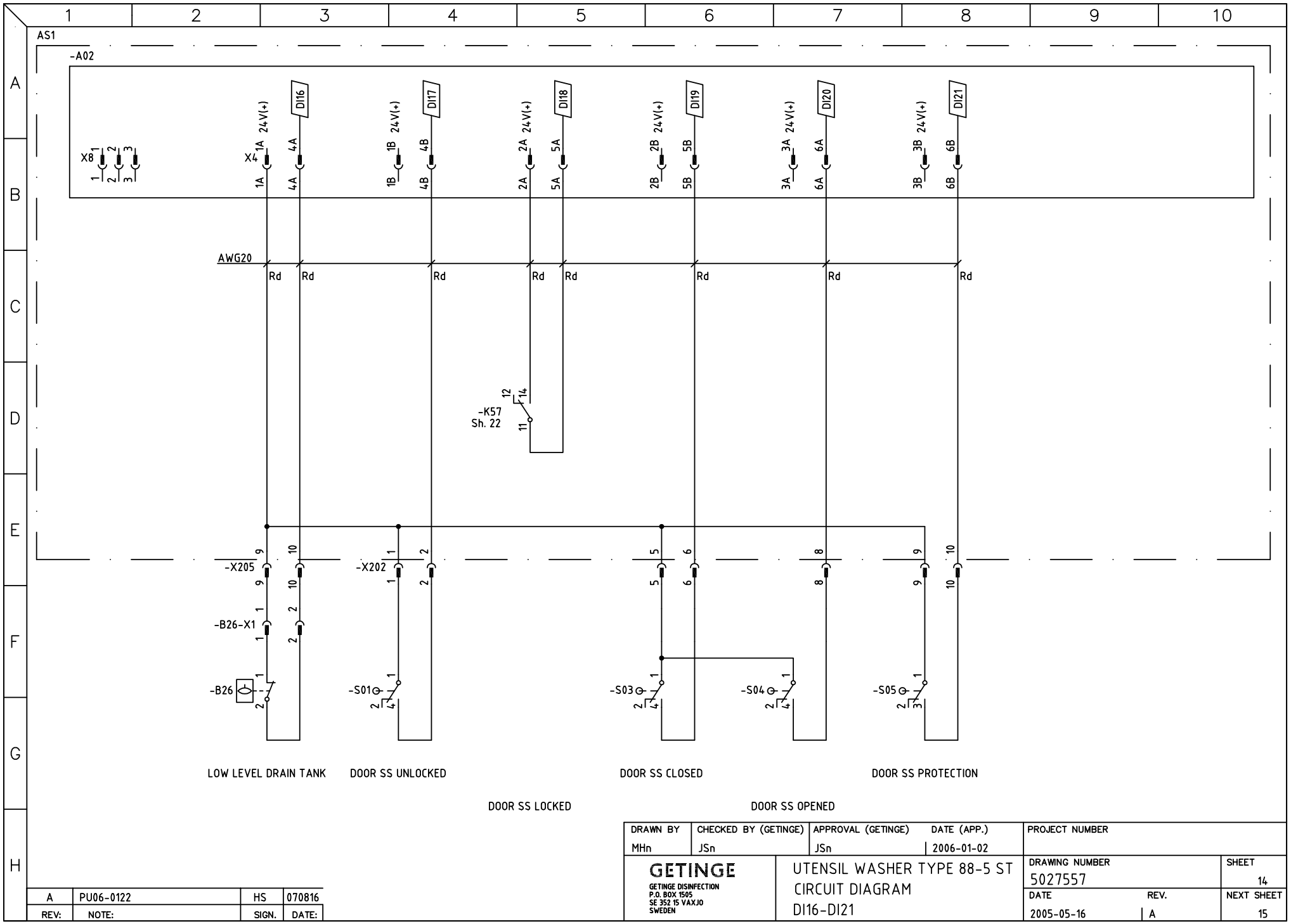

DRAWN BY	CHECKED BY (GETINGE)	APPROVAL (GETINGE)	DATE (APP.)	PROJECT NUMBER
MHn	JSn	JSn	2006-01-02	

GETINGE
GETINGE DISINFECTION
P.O. BOX 1505
SE 352 15 VAXJO
SWEDEN

UTENSIL WASHER TYPE 88-5 ST
CIRCUIT DIAGRAM
DI16-DI21

DRAWING NUMBER	SHEET
5027557	14
DATE / REV.	NEXT SHEET
2005-05-16 / A	15

REV:	NOTE:	SIGN.	DATE:
A	PU06-0122	HS	070816

Downloaded from www.Manualslib.com manuals search engine

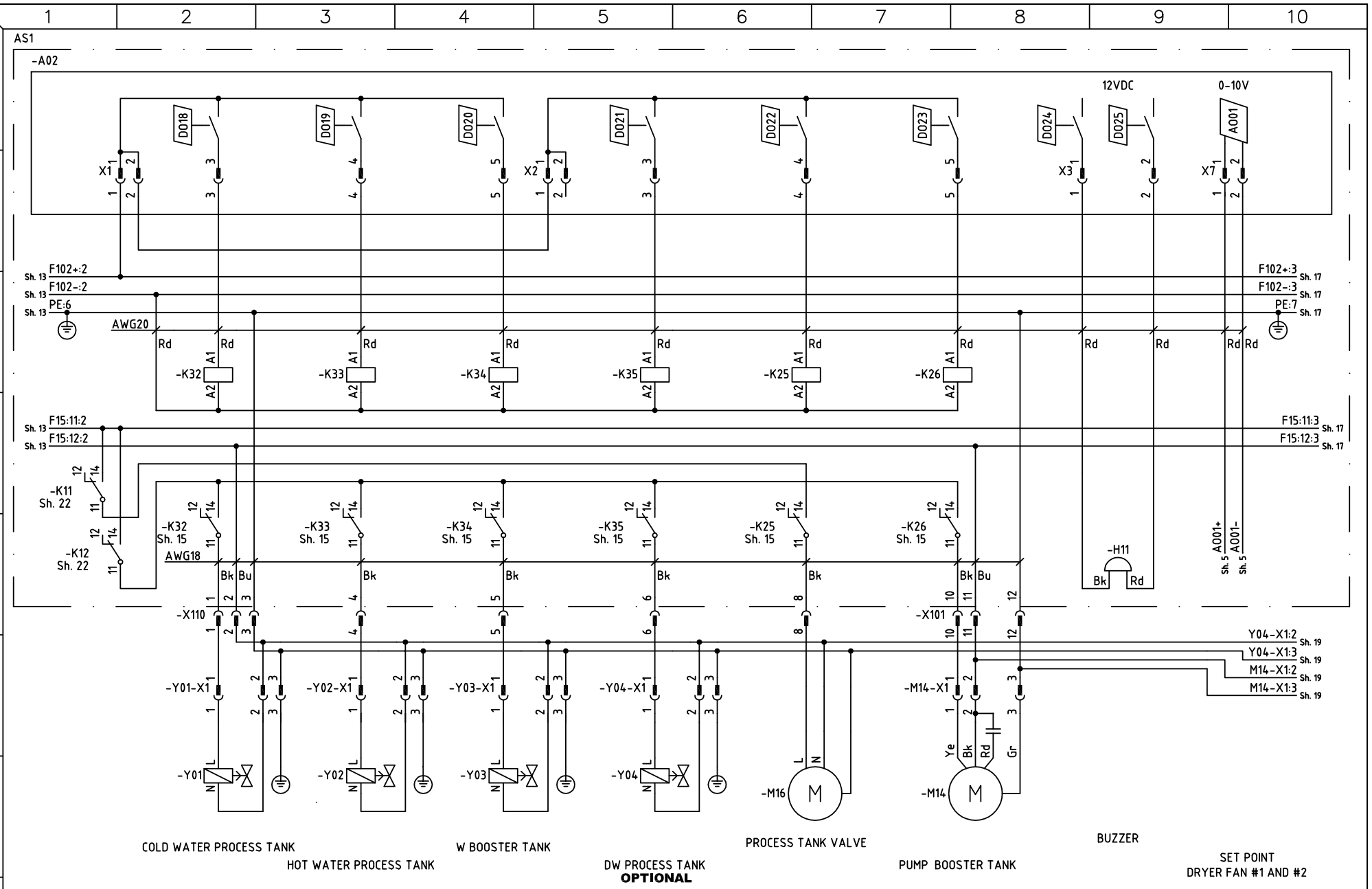

A	PU06-0122	HS	070816
REV:	NOTE:	SIGN.	DATE:

DRAWN BY	CHECKED BY (GETINGE)	APPROVAL (GETINGE)	DATE (APP.)	PROJECT NUMBER	
MHn	JSn	JSn	2006-01-02		

GETINGE
GETINGE DISINFECTION
P.O. BOX 1505
SE 352 15 VAXJO
SWEDEN

UTENSIL WASHER TYPE 88-5 ST
CIRCUIT DIAGRAM
D018-D025, A001

DRAWING NUMBER		SHEET
5027557		15
DATE	REV.	NEXT SHEET
2005-05-16	A	16

Downloaded from www.Manualslib.com manuals search engine

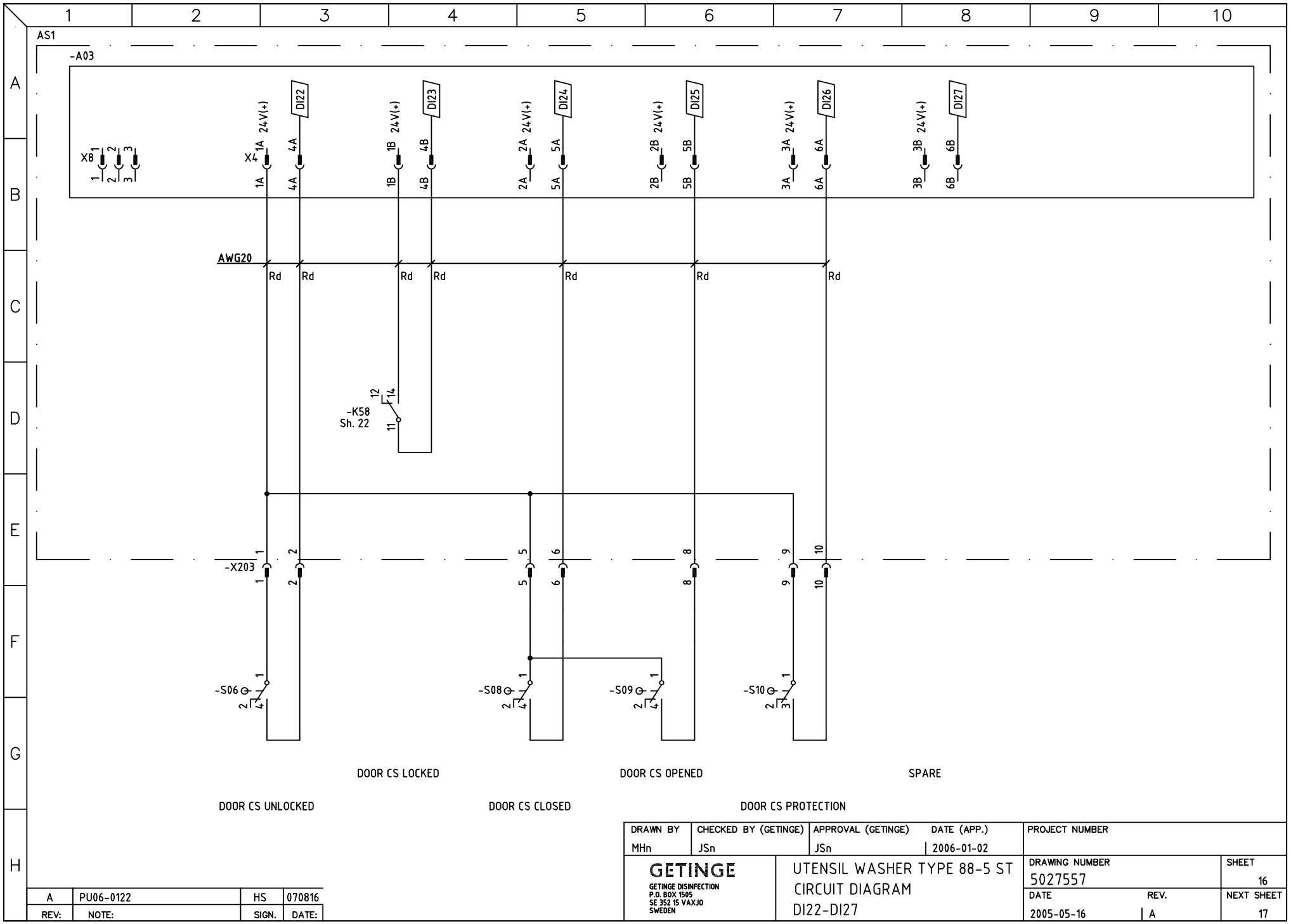

DRAWN BY	CHECKED BY (GETINGE)	APPROVAL (GETINGE)	DATE (APP.)	PROJECT NUMBER
MHn	JSn	JSn	2006-01-02	

GETINGE
GETINGE DISINFECTION
P.O. BOX 1505
SE 352 15 VAXJO
SWEDEN

UTENSIL WASHER TYPE 88-5 ST
CIRCUIT DIAGRAM
DI22-DI27

DRAWING NUMBER	SHEET
5027557	16
DATE / REV.	NEXT SHEET
2005-05-16 / A	17

REV:	NOTE:	SIGN.	DATE:
A	PU06-0122	HS	070816

Downloaded from www.Manualslib.com manuals search engine

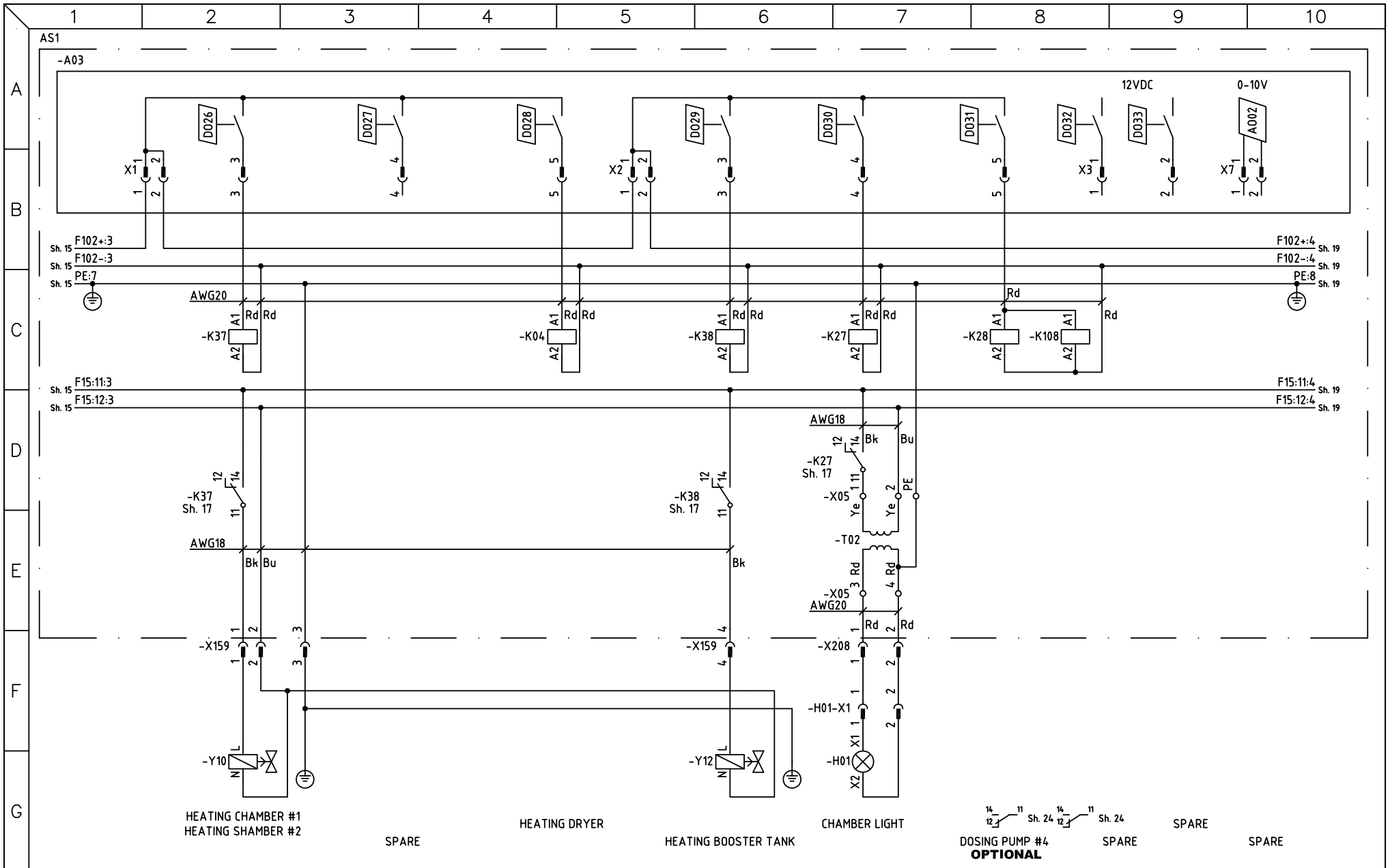

DRAWN BY	CHECKED BY (GETINGE)	APPROVAL (GETINGE)	DATE (APP.)	PROJECT NUMBER
MHn	JSn	JSn	2006-01-02	

GETINGE
GETINGE DISINFECTION
P.O. BOX 1505
SE 352 15 VAXJO
SWEDEN

UTENSIL WASHER TYPE 88-5 ST
CIRCUIT DIAGRAM
D026-D033, A002

DRAWING NUMBER	SHEET
5027557	17
DATE / REV.	NEXT SHEET
2005-05-16 / A	18

A	PU06-0122	HS	070816
REV:	NOTE:	SIGN.	DATE:

Downloaded from www.Manualslib.com manuals search engine

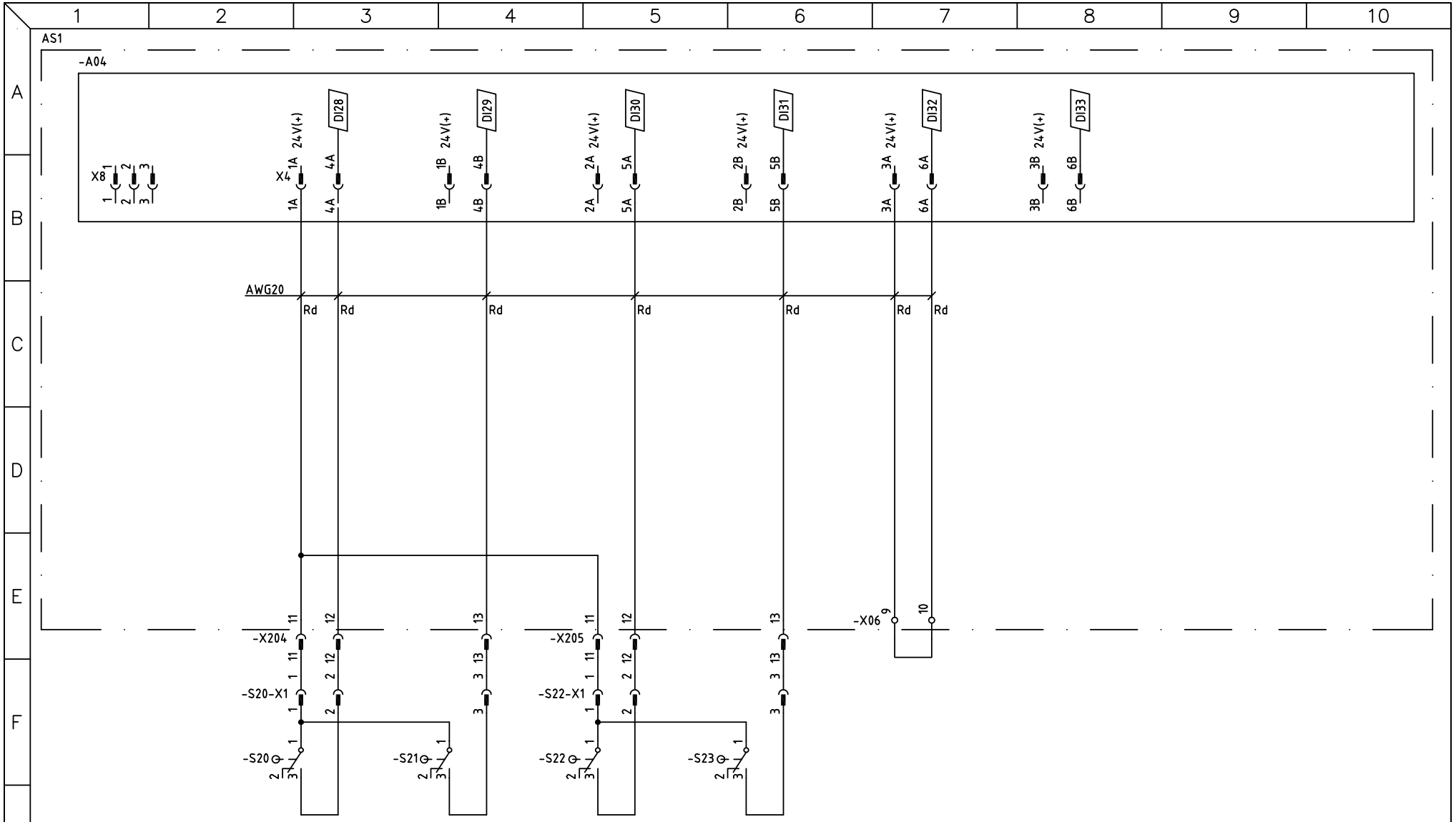

DRAWN BY	CHECKED BY (GETINGE)	APPROVAL (GETINGE)	DATE (APP.)	PROJECT NUMBER
MHn	JSn	JSn	2006-01-02	

GETINGE
GETINGE DISINFECTION
P.O. BOX 1505
SE 352 15 VAXJO
SWEDEN

UTENSIL WASHER TYPE 88-5 ST
CIRCUIT DIAGRAM
DI28-DI33

DRAWING NUMBER	SHEET
5027557	18
DATE / REV.	NEXT SHEET
2005-05-16 / A	19

REV:	NOTE:	SIGN.	DATE:
A	PU06-0122	HS	070816

Downloaded from www.Manualslib.com manuals search engine

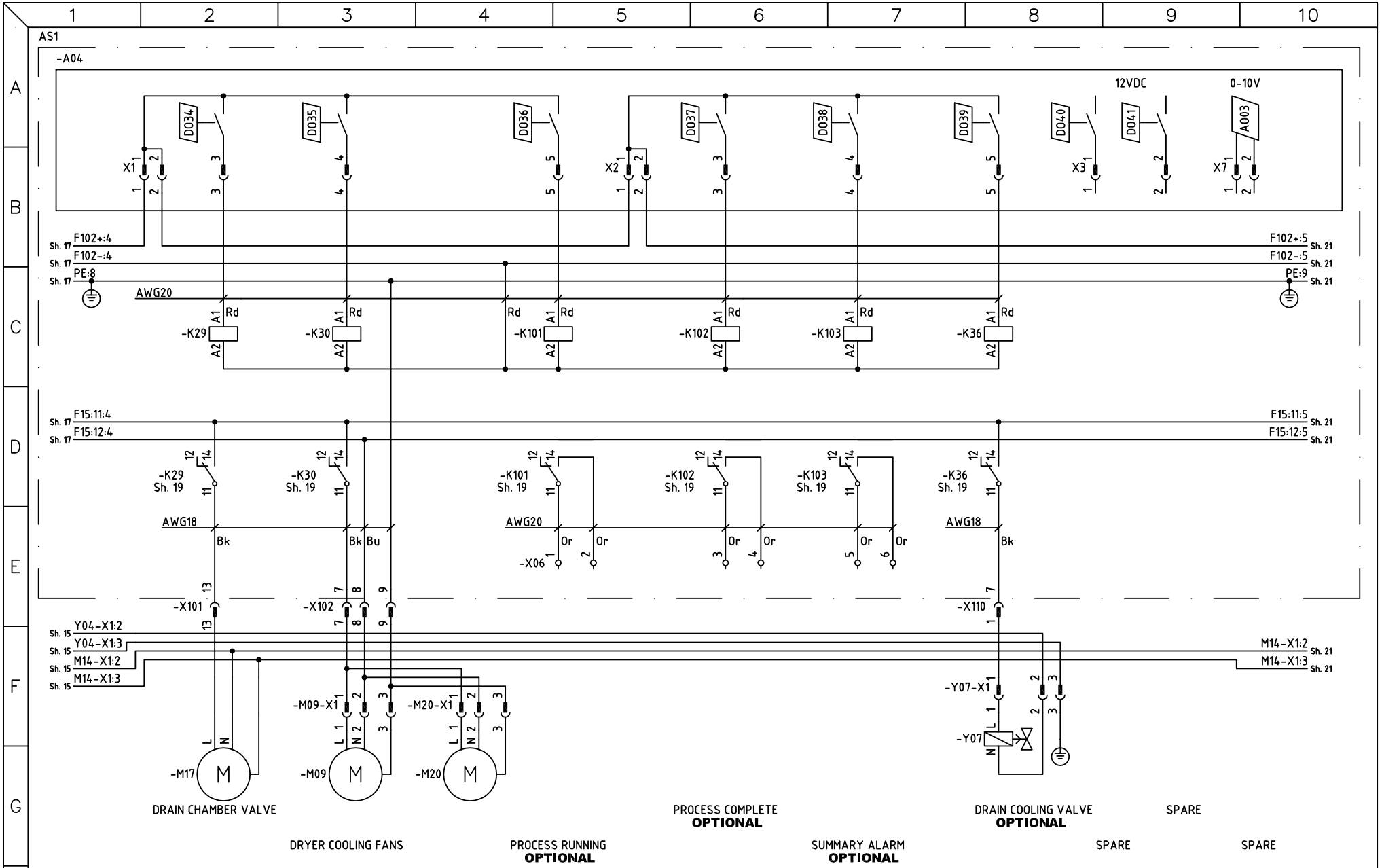

DRAWN BY	CHECKED BY (GETINGE)	APPROVAL (GETINGE)	DATE (APP.)	PROJECT NUMBER
MHn	JSn	JSn	2006-01-02	

GETINGE
GETINGE DISINFECTION
P.O. BOX 1505
SE 352 15 VAXJO
SWEDEN

UTENSIL WASHER TYPE 88-5 ST
CIRCUIT DIAGRAM
D034-D041, A003

DRAWING NUMBER	SHEET
5027557	19
DATE / REV.	NEXT SHEET
2005-05-16 / A	20

REV:	NOTE:	SIGN.	DATE:
A	PU06-0122	HS	070816

Downloaded from www.Manualslib.com manuals search engine

DRAWN BY	CHECKED BY (GETINGE)	APPROVAL (GETINGE)	DATE (APP.)	PROJECT NUMBER
MHn	JSn	JSn	2006-01-02	

GETINGE
GETINGE DISINFECTION
P.O. BOX 1505
SE 352 15 VAXJO
SWEDEN

UTENSIL WASHER TYPE 88-5 ST
CIRCUIT DIAGRAM
DI34-DI39

DRAWING NUMBER	SHEET
5027557	20
DATE / REV.	NEXT SHEET
2005-05-16 / A	21

REV:	NOTE:	SIGN.	DATE:
A	PU06-0122	HS	070816

Downloaded from www.Manualslib.com manuals search engine

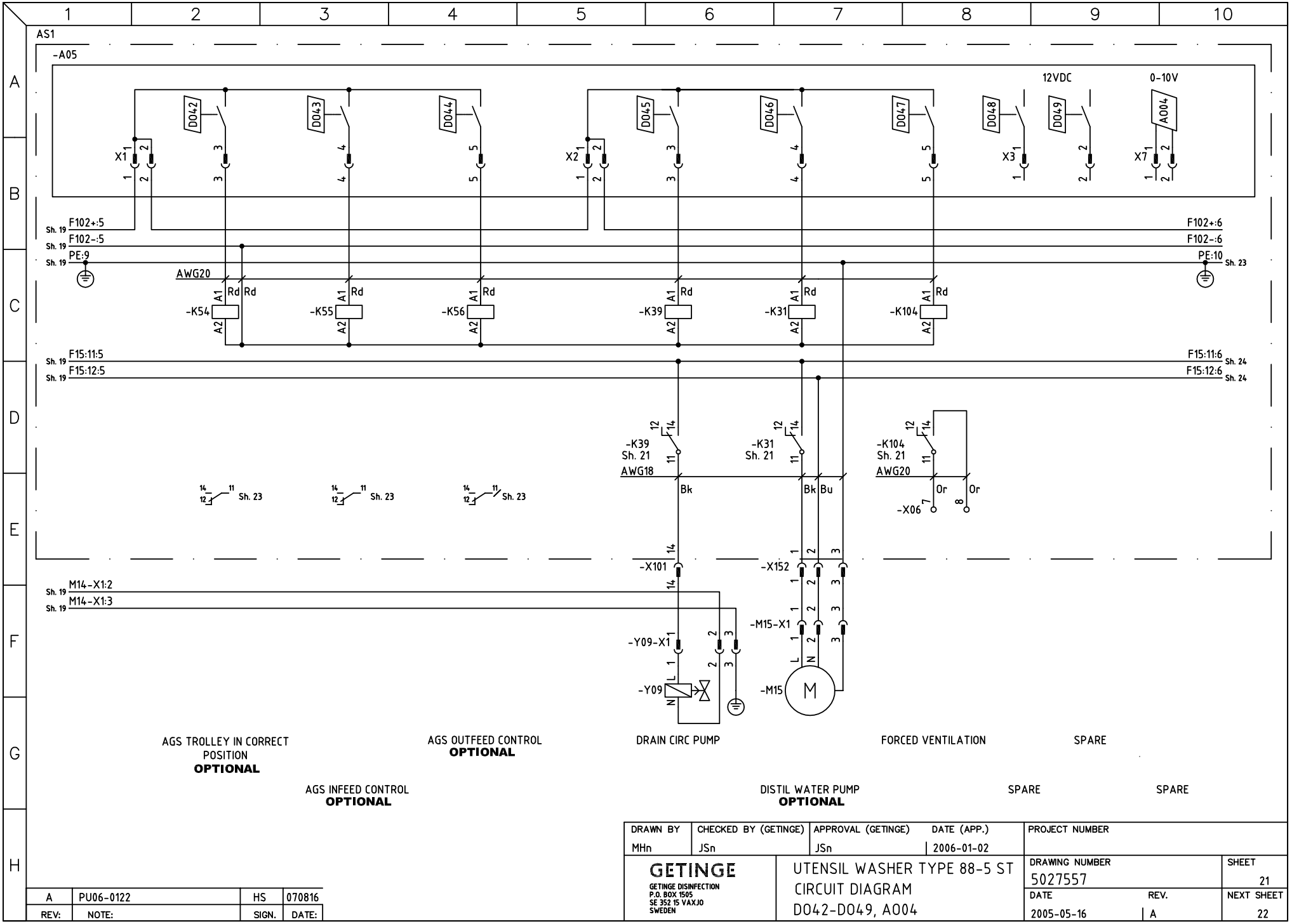

DRAWN BY	CHECKED BY (GETINGE)	APPROVAL (GETINGE)	DATE (APP.)	PROJECT NUMBER
MHn	JSn	JSn	2006-01-02	

GETINGE
GETINGE DISINFECTION
P.O. BOX 1505
SE 352 15 VAXJO
SWEDEN

UTENSIL WASHER TYPE 88-5 ST
CIRCUIT DIAGRAM
D042-D049, A004

DRAWING NUMBER	SHEET
5027557	21
DATE / REV.	NEXT SHEET
2005-05-16 / A	22

REV:	NOTE:	SIGN.	DATE:
A	PU06-0122	HS	070816

Downloaded from www.Manualslib.com manuals search engine

THIS DRAWING CONTAINS CONFIDENTIAL INFORMATION AND REMAINS THE PROPERTY OF GETINGE DISINFECTION AB WITHOUT WHOSE PERMISSION IT MAY NOT BE COPIED, SHOWN OR HANDED TO A THIRD PART OR USED AT THE BASIS OF ALTERNATE DESIGNS

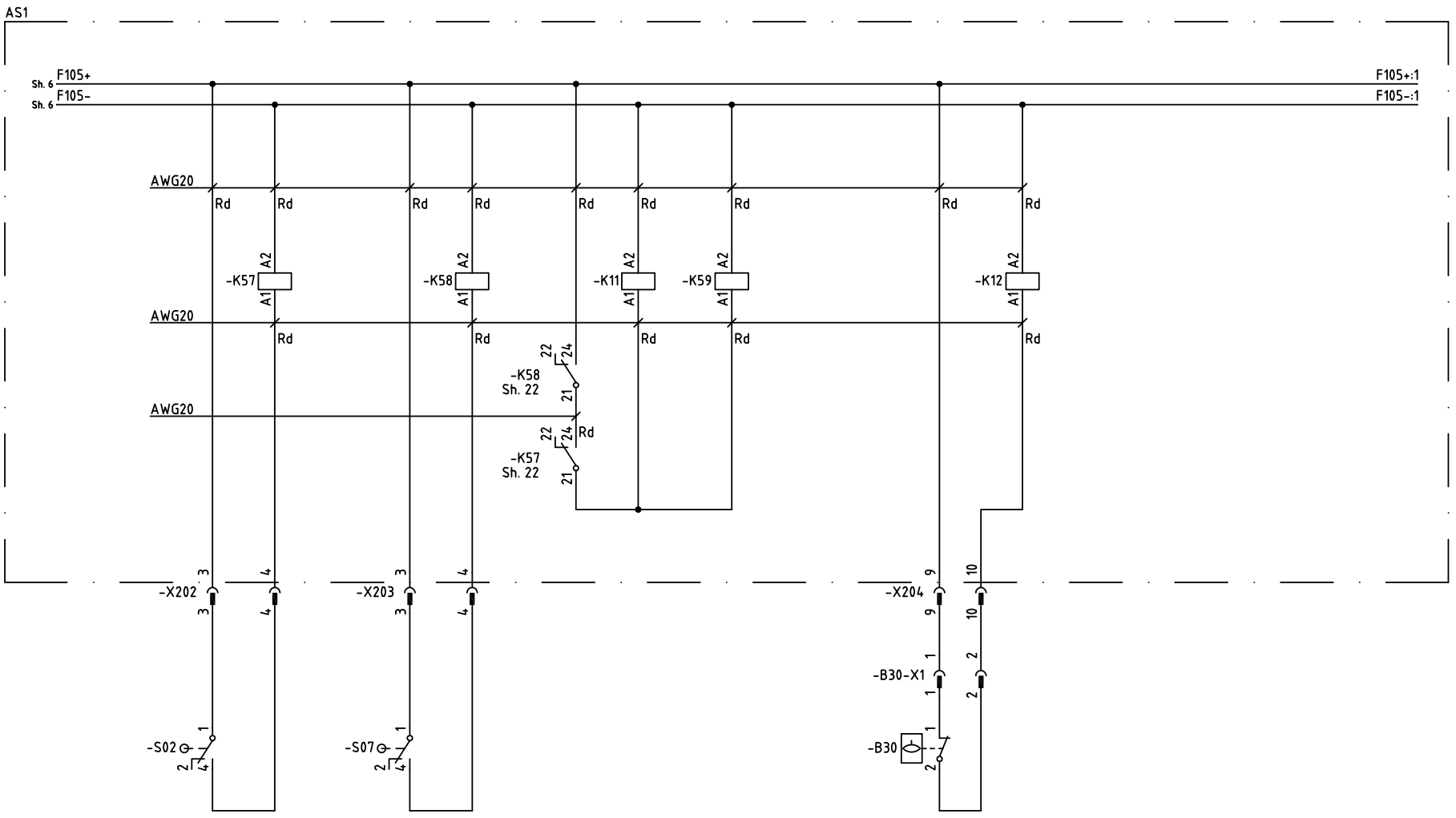

DOOR SS LOCKED

14 11 Sh. 14
24 21 Sh. 22

DOOR CS LOCKED

14 11 Sh. 16
24 21 Sh. 22

HARDWARE INTERLOCK

14 11 Sh. 15
14 11 Sh. 12

HIGH LEVEL PROCESS TANK

14 11 Sh. 15

DRAWN BY	CHECKED BY (GETINGE)	APPROVAL (GETINGE)	DATE (APP.)	PROJECT NUMBER
MHn	JSn	JSn	2006-01-02	

GETINGE
GETINGE DISINFECTION
P.O. BOX 1505
SE 352 15 VÄXJÖ
SWEDEN

UTENSIL WASHER TYPE 88-5 ST
CIRCUIT DIAGRAM
HARDWARE INTERLOCKS

DRAWING NUMBER	SHEET
5027557	22
DATE / REV.	NEXT SHEET
2005-05-16 / A	23

REV:	NOTE:	SIGN.	DATE:
A	PU06-0122	HS	070816

Downloaded from www.Manualslib.com manuals search engine

THIS DRAWING CONTAINS CONFIDENTIAL INFORMATION AND REMAINS THE PROPERTY OF GETINGE DISINFECTION AB WITHOUT WHOSE PERMISSION IT MAY NOT BE COPIED, SHOWN OR HANDED TO A THIRD PART OR USED AT THE BASIS OF ALTERNATE DESIGNS

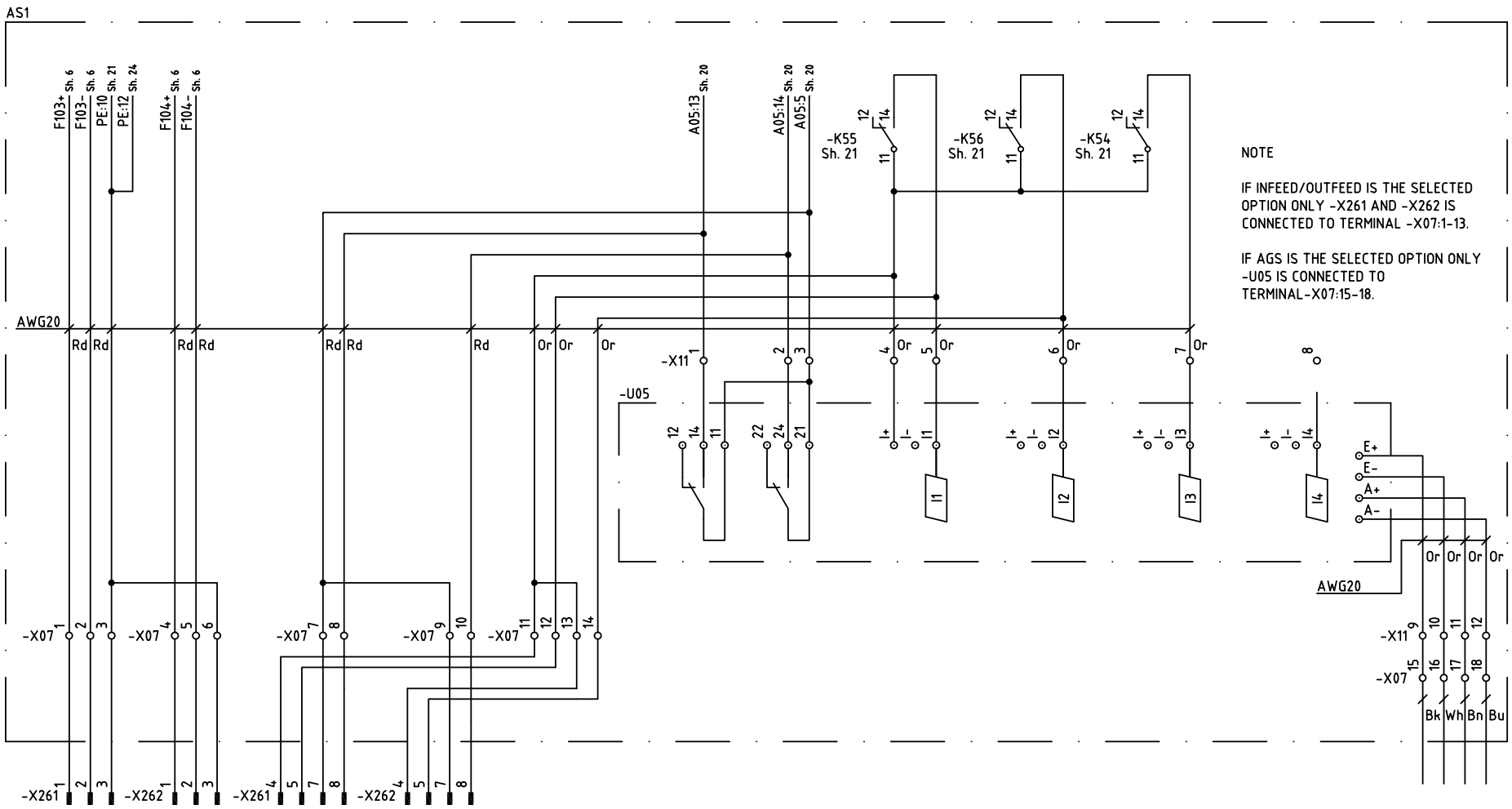

DRAWN BY	CHECKED BY (GETINGE)	APPROVAL (GETINGE)	DATE (APP.)	PROJECT NUMBER
MHn	JSn	JSn	2006-01-02	

GETINGE
GETINGE DISINFECTION
P.O. BOX 1505
SE 352 15 VAXJO
SWEDEN

UTENSIL WASHER TYPE 88-5 ST
CIRCUIT DIAGRAM
AGS SIGNALS

DRAWING NUMBER	SHEET
5027557	23
DATE / REV.	NEXT SHEET
2005-05-16 / A	24

REV:	NOTE:	SIGN.	DATE:
A	PU06-0122	HS	070816

Downloaded from www.Manualslib.com manuals search engine

THIS DRAWING CONTAINS CONFIDENTIAL INFORMATION AND REMAINS THE PROPERTY OF GETINGE DISINFECTION AB WITHOUT WHOSE PERMISSION IT MAY NOT BE COPIED, SHOWN OR HANDED TO A THIRD PART OR USED AT THE BASIS OF ALTERNATE DESIGNS

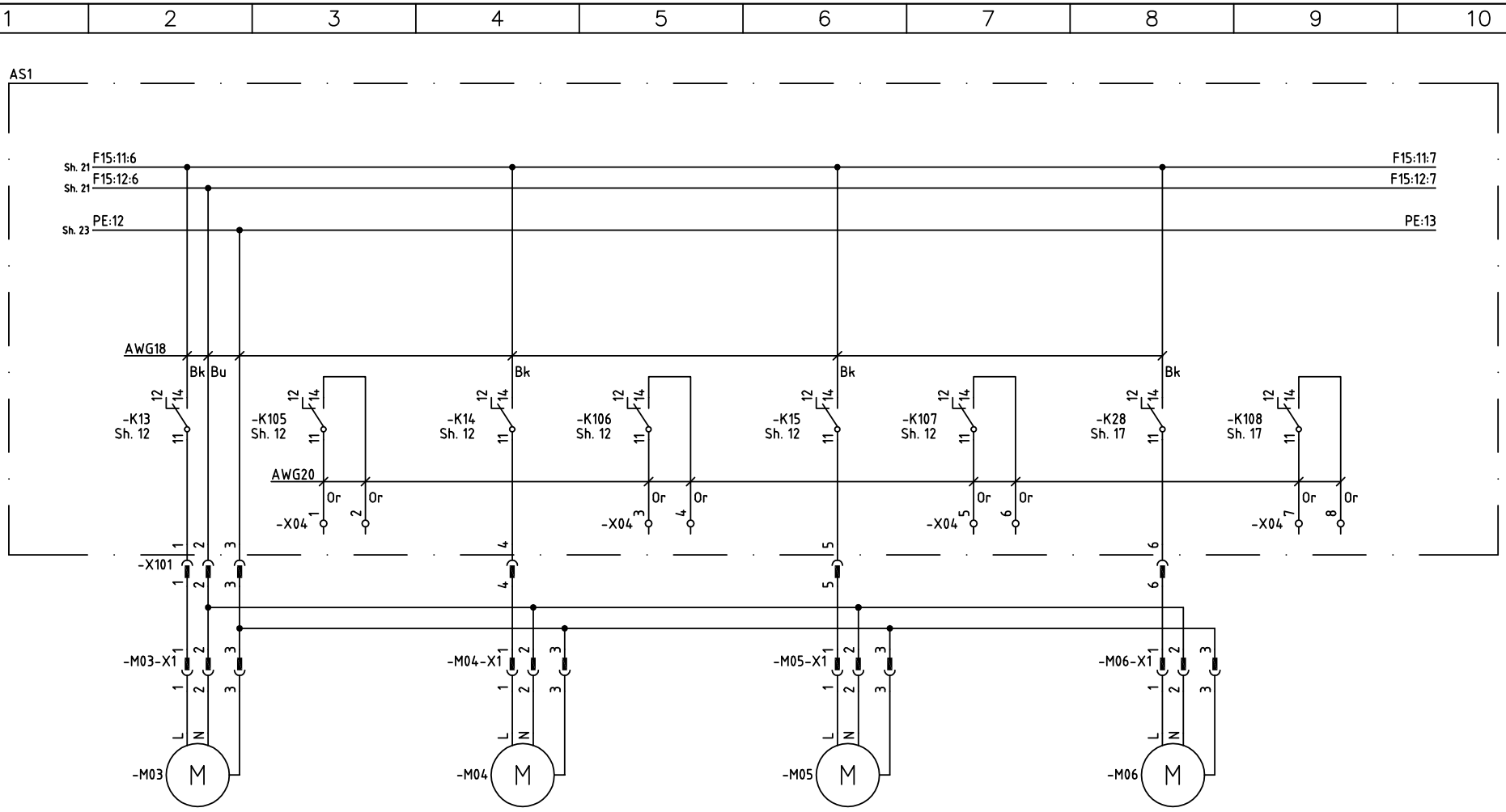

DRAWN BY	CHECKED BY (GETINGE)	APPROVAL (GETINGE)	DATE (APP.)	PROJECT NUMBER
MHn	JSn	JSn	2006-01-02	

GETINGE
GETINGE DISINFECTION
P.O. BOX 1505
SE 352 15 VÄXJÖ
SWEDEN

UTENSIL WASHER TYPE 88-5 ST
CIRCUIT DIAGRAM
DOSING PUMPS

DRAWING NUMBER	SHEET
5027557	24
DATE / REV.	NEXT SHEET
2005-05-16 / A	51

REV:	NOTE:	SIGN.	DATE:
A	PU06-0122	HS	070816

Downloaded from www.Manualslib.com manuals search engine

THIS DRAWING CONTAINS CONFIDENTIAL INFORMATION AND REMAINS THE PROPERTY OF GETINGE DISINFECTION AB WITHOUT WHOSE PERMISSION IT MAY NOT BE COPIED, SHOWN OR HANDED TO A THIRD PART OR USED AT THE BASIS OF ALTERNATE DESIGNS

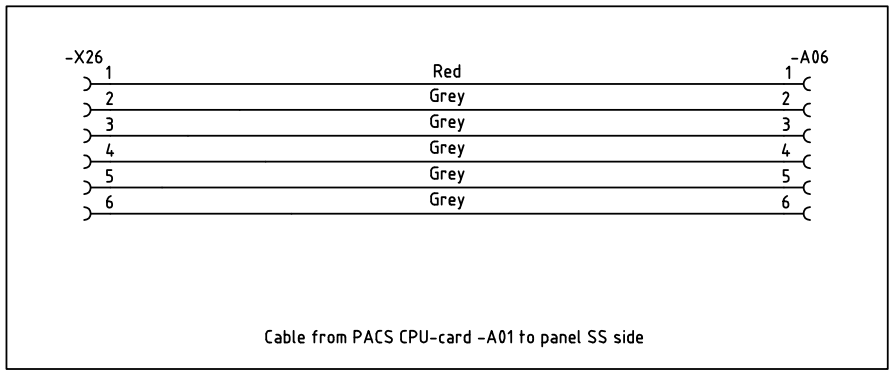

Cable from PACS CPU-card -A01 to panel SS side

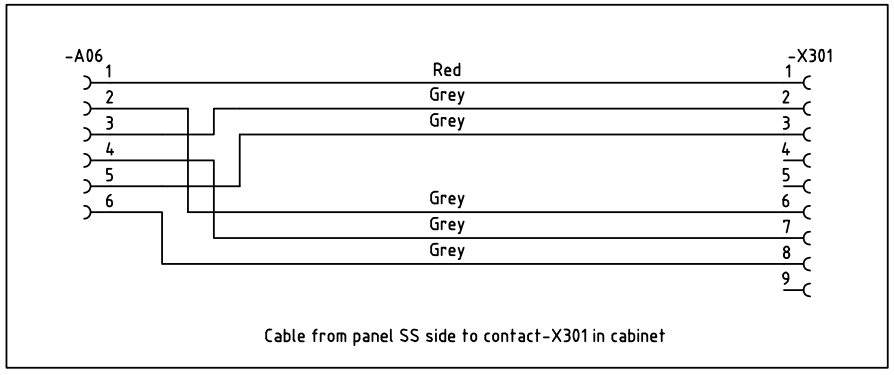

Cable from panel SS side to contact-X301 in cabinet

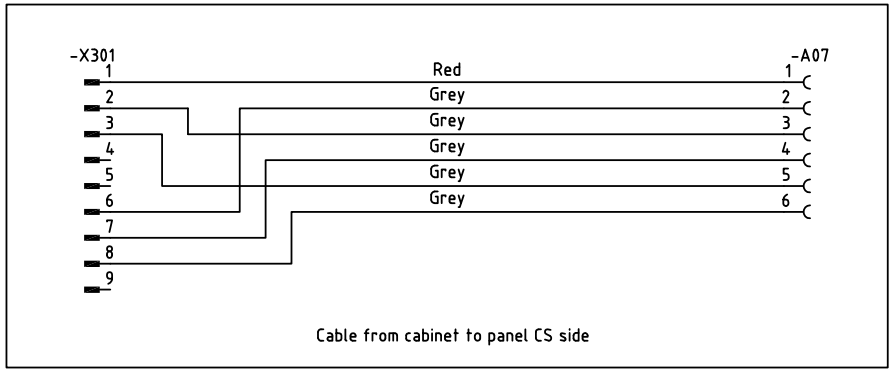

Cable from cabinet to panel CS side

DRAWN BY	CHECKED BY (GETINGE)	APPROVAL (GETINGE)	DATE (APP.)	PROJECT NUMBER
MHn	JSn	JSn	2006-01-02	

GETINGE
GETINGE DISINFECTION
P.O. BOX 1505
SE 352 15 VÄXJÖ
SWEDEN

UTENSIL WASHER TYPE 88-5 ST
CIRCUIT DIAGRAM
CABLES, PANEL CS AND SS

DRAWING NUMBER		SHEET
5027557		51
DATE	REV.	NEXT SHEET
2005-05-16	A	52

A	PU06-0122	HS	070816
REV:	NOTE:	SIGN.	DATE:

Downloaded from www.Manualslib.com manuals search engine

THIS DRAWING CONTAINS CONFIDENTIAL INFORMATION AND REMAINS THE PROPERTY OF GETINGE DISINFECTION AB WITHOUT WHOSE PERMISSION IT MAY NOT BE COPIED, SHOWN OR HANDED TO A THIRD PART OR USED AT THE BASIS OF ALTERNATE DESIGNS

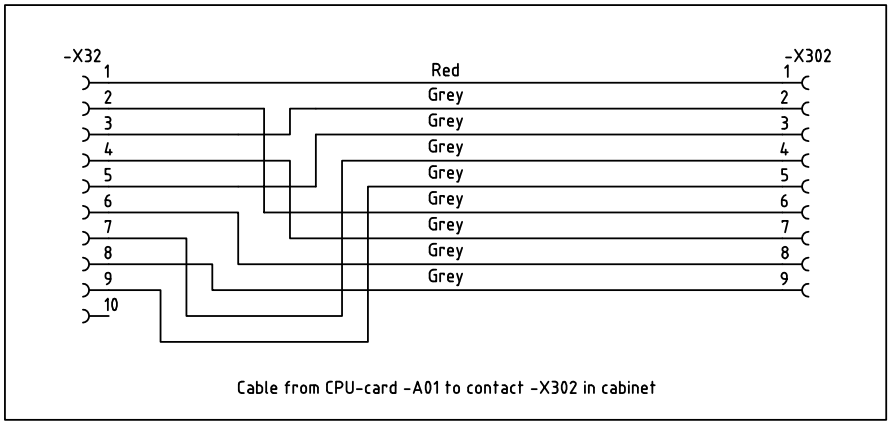

Cable from CPU-card -A01 to contact -X302 in cabinet

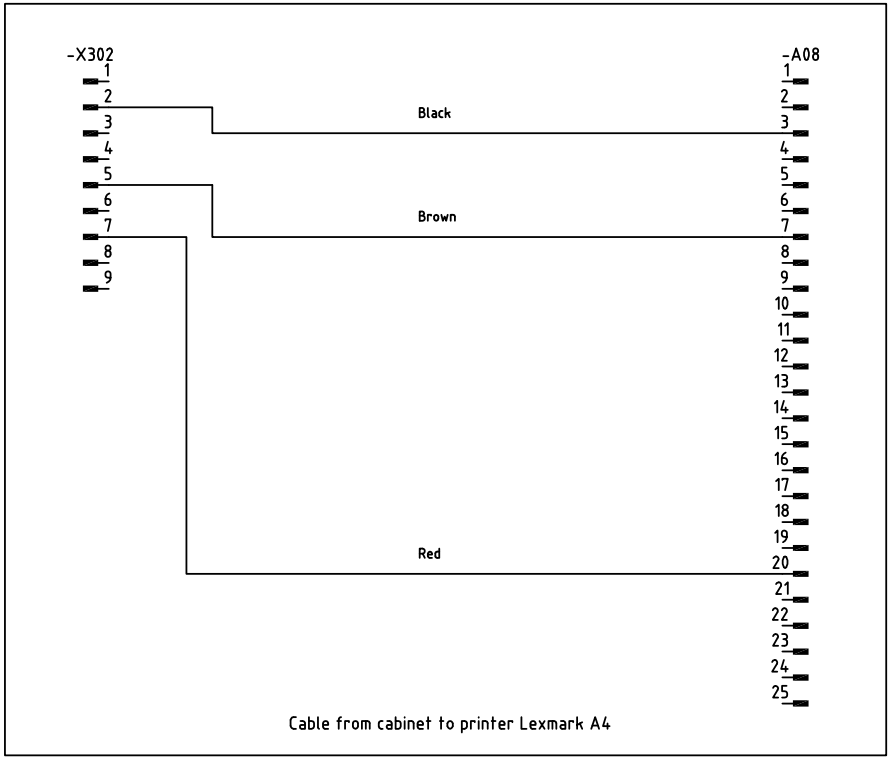

Cable from cabinet to printer Lexmark A4

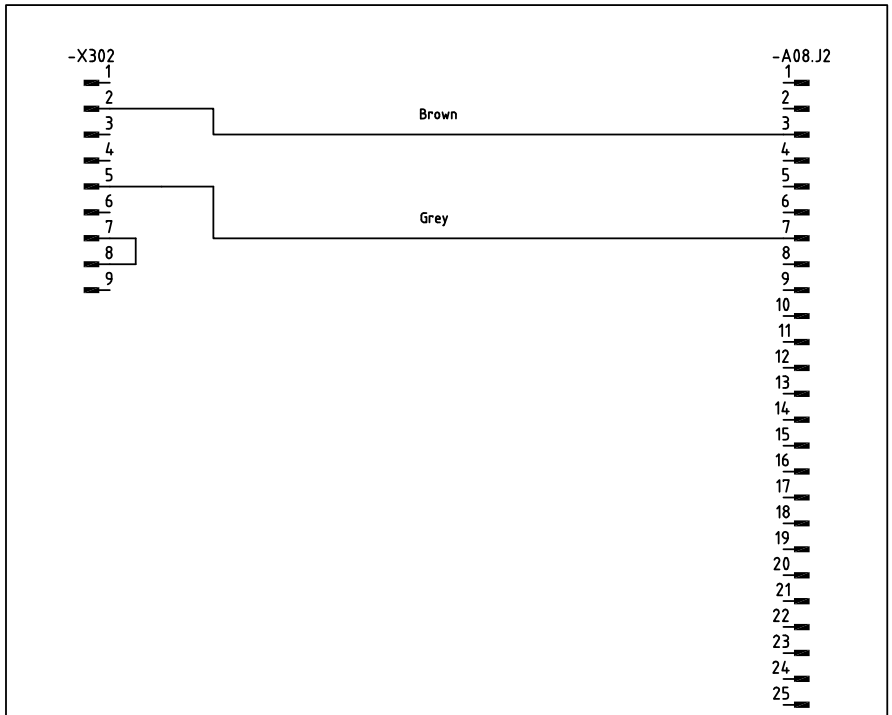

Cable from cabinet to printer CUSTOM

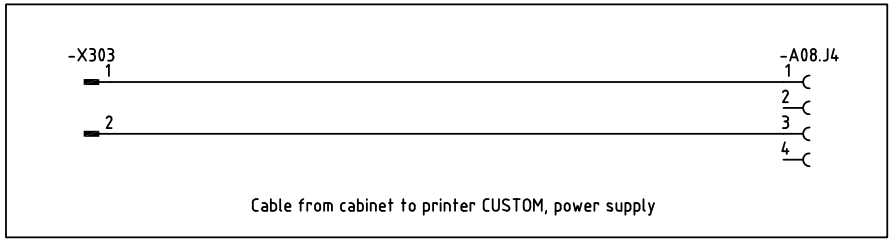

Cable from cabinet to printer CUSTOM, power supply

A	PU06-0122	HS	070816
REV:	NOTE:	SIGN.	DATE:

DRAWN BY	CHECKED BY (GETINGE)	APPROVAL (GETINGE)	DATE (APP.)
MHn	JSn	JSn	2006-01-02

PROJECT NUMBER

GETINGE
GETINGE DISINFECTION
P.O. BOX 1505
SE 352 15 VÄXJÖ
SWEDEN

UTENSIL WASHER TYPE 88-5 ST
CIRCUIT DIAGRAM
CABLES, PRINTER

DRAWING NUMBER		SHEET
5027557		52
DATE	REV.	NEXT SHEET
2005-05-16	A	53

Downloaded from www.Manualslib.com manuals search engine

THIS DRAWING CONTAINS CONFIDENTIAL INFORMATION AND REMAINS THE PROPERTY OF GETINGE DISINFECTION AB WITHOUT WHOSE PERMISSION IT MAY NOT BE COPIED, SHOWN OR HANDED TO A THIRD PART OR USED AT THE BASIS OF ALTERNATE DESIGNS

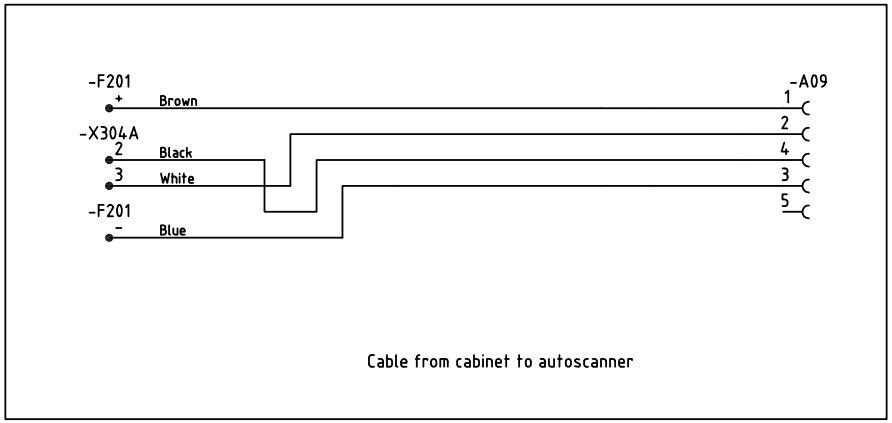

Cable from cabinet to autoscanner

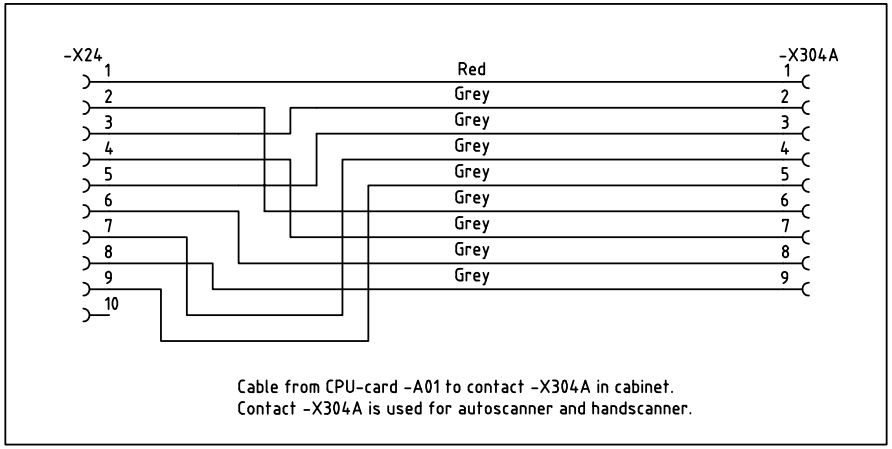

Cable from CPU-card -A01 to contact -X304A in cabinet.
Contact -X304A is used for autoscanner and handscanner.

A	PU06-0122	HS	070816
REV:	NOTE:	SIGN.	DATE:

DRAWN BY	CHECKED BY (GETINGE)	APPROVAL (GETINGE)	DATE (APP.)	PROJECT NUMBER
MHn	JSn	JSn	2006-01-02	

GETINGE
GETINGE DISINFECTION
P.O. BOX 1505
SE 352 15 VÄXJÖ
SWEDEN

UTENSIL WASHER TYPE 88-5 ST
CIRCUIT DIAGRAM
CABLES, AUTOSCANNER

DRAWING NUMBER		SHEET
5027557		53
DATE	REV.	NEXT SHEET
2005-05-16	A	54

Downloaded from www.Manualslib.com manuals search engine

THIS DRAWING CONTAINS CONFIDENTIAL INFORMATION AND REMAINS THE PROPERTY OF GETINGE DISINFECTION AB WITHOUT WHOSE PERMISSION IT MAY NOT BE COPIED, SHOWN OR HANDED TO A THIRD PART OR USED AT THE BASIS OF ALTERNATE DESIGNS

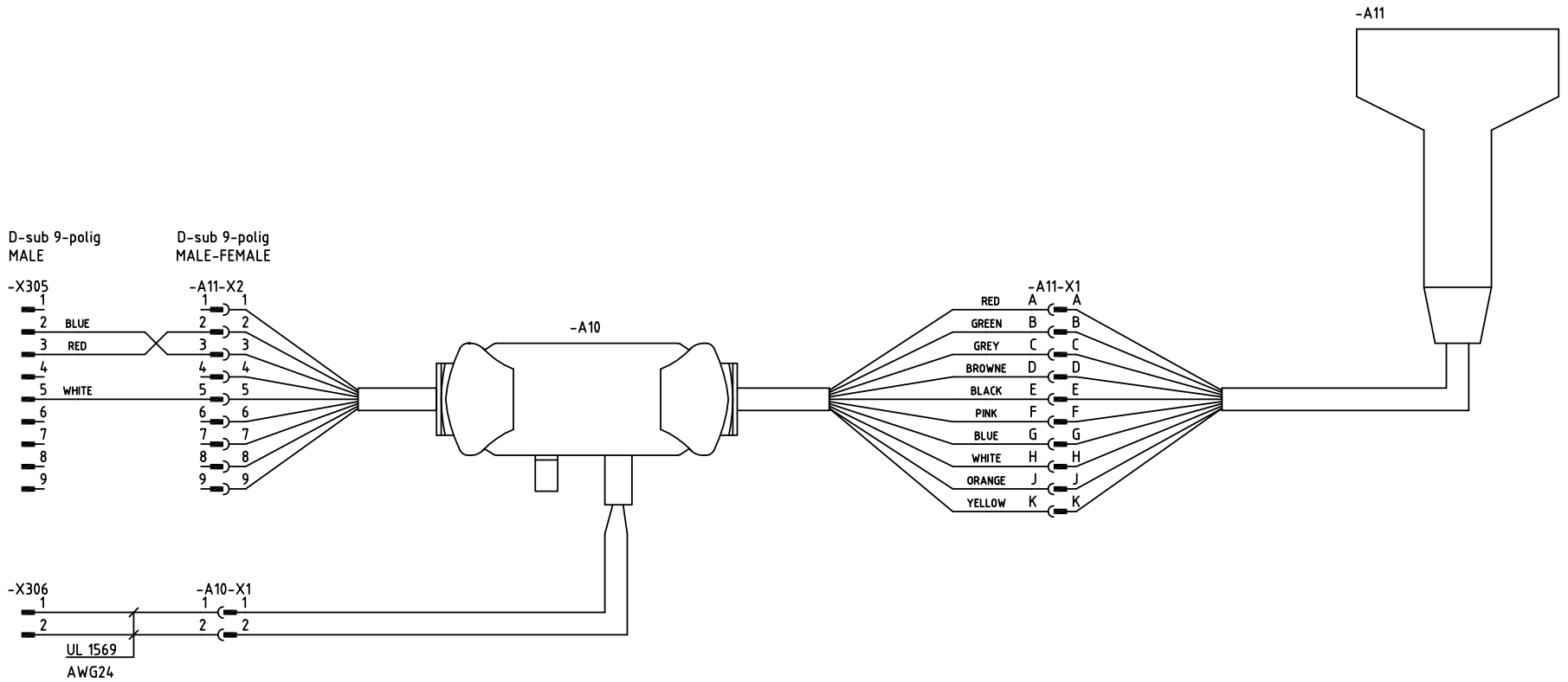

DRAWN BY	CHECKED BY (GETINGE)	APPROVAL (GETINGE) DATE (APP.)	PROJECT NUMBER
MHn	JSn	JSn 2006-01-02	

GETINGE
GETINGE DISINFECTION
P.O. BOX 1505
SE 352 15 VAXJO
SWEDEN

UTENSIL WASHER TYPE 88-5 ST
CIRCUIT DIAGRAM
CABLE, HANDSCANNER

DRAWING NUMBER	SHEET
5027557	54
DATE / REV.	NEXT SHEET
2005-05-16 / A	101

REV:	NOTE:	SIGN.	DATE:
A	PU06-0122	HS	070816

Downloaded from www.Manualslib.com manuals search engine

THIS DRAWING CONTAINS CONFIDENTIAL INFORMATION AND REMAINS THE PROPERTY OF GETINGE DISINFECTION AB WITHOUT WHOSE PERMISSION IT MAY NOT BE COPIED, SHOWN OR HANDED TO A THIRD PART OR USED AT THE BASIS OF ALTERNATE DESIGNS

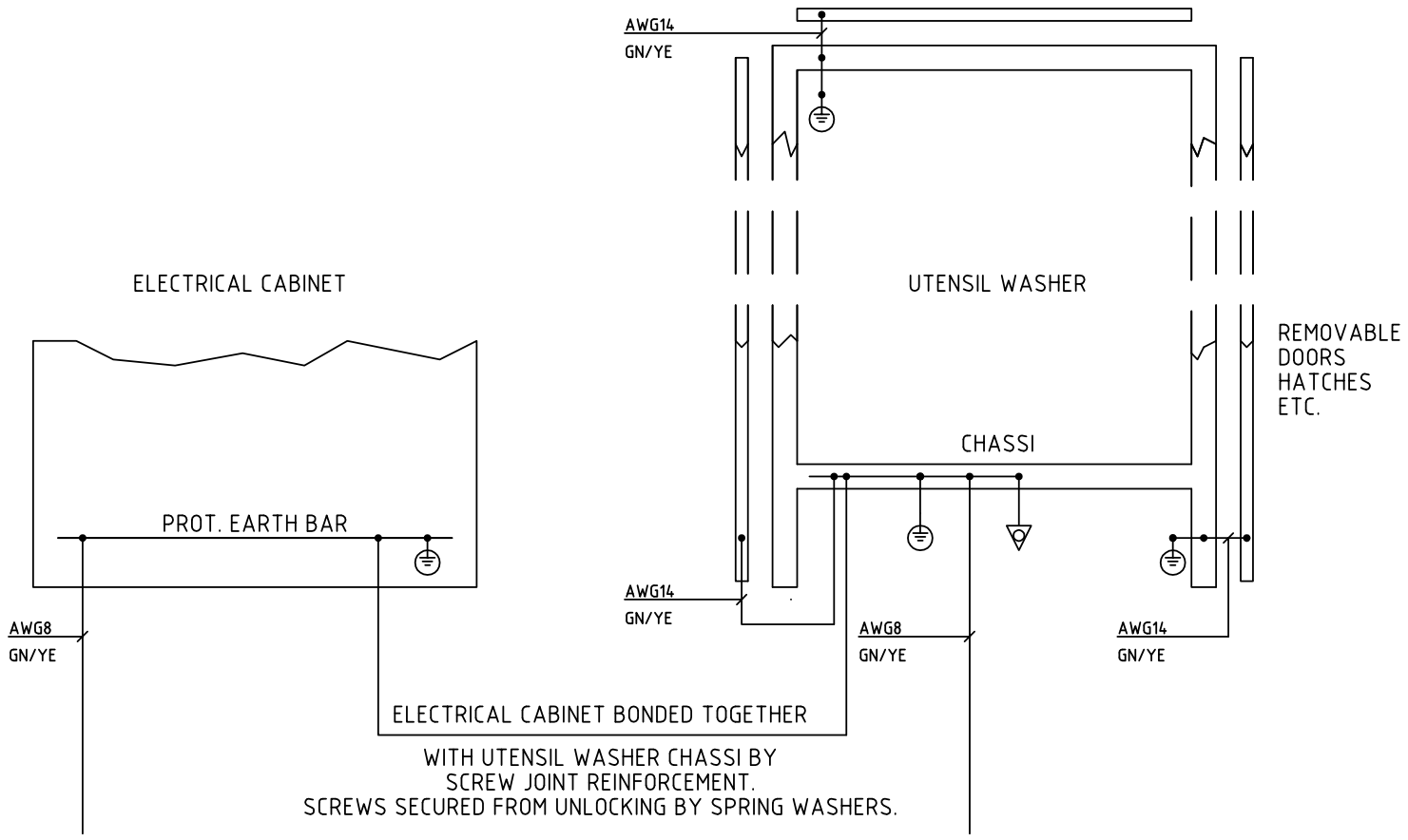

EXTERNAL PROTECTIVE EARTH CONDUCTOR
FROM POWER DISTRIBUTION

EXTERNAL EQUAL POTENTIAL BONDING CONDUCTOR
FROM POWER DISTRIBUTION

ALL CONNECTIONS TO
PROTECTIVE EARTH SYSTEM
SHALL BE MARKED WITH
FOLLOWING SYMBOL

DRAWN BY	CHECKED BY (GETINGE)	APPROVAL (GETINGE)	DATE (APP.)
MHn	JSn	JSn	2006-01-02

PROJECT NUMBER

GETINGE
GETINGE DISINFECTION
P.O. BOX 1505
SE 352 15 VÄXJÖ
SWEDEN

UTENSIL WASHER TYPE 88-5 ST
CIRCUIT DIAGRAM
PROTECTIVE BONDING CIRCUIT

DRAWING NUMBER		SHEET
5027557		101
DATE	REV.	NEXT SHEET
2005-05-16	A	-

REV:	NOTE:	SIGN.	DATE:
A	PU06-0122	HS	070816

Downloaded from www.Manualslib.com manuals search engine

THIS DRAWING CONTAINS CONFIDENTIAL INFORMATION AND REMAINS THE PROPERTY OF GETINGE DISINFECTION AB WITHOUT WHOSE PERMISSION IT MAY NOT BE COPIED, SHOWN OR HANDED TO A THIRD PART OR USED AT THE BASIS OF ALTERNATE DESIGNS

CONTENTS OF DRAWINGS

SHEET	DESCRIPTION	REVISION	NOTE	SHEET	DESCRIPTION	REVISION	NOTE
2	ELECTRICAL CABINET LEFT SIDE	A	230-240V, 50-60Hz, 3+PE	54	CABLE, HANDSCANNER	A	
3	POWER SUPPLY, MAIN CIRCUITS	A		101	PROTECTIVE BONDING CIRCUIT	A	
4	MAIN CIRCUITS	A					
5	CONTROL VOLTAGE, 230VAC	A					
6	CONTROL VOLTAGE, 24VDC	A					
7	CONTROL VOLTAGE, 5VDC	A					
8	CONTROL SYSTEM, PACS300	A					
9	MAIN BOARD, AI00-AI07	A					
10	MAIN BOARD, DI00-DI07	A					
11	MAIN BOARD, DI08-DI15	A					
12	MAIN BOARD, DO00-DO08	A					
13	MAIN BOARD, DO09-DO17	A					
14	EXPANSION CARD #1, DI16-DI21	A					
15	EXPANSION CARD #1, DO18-DO25, AO01	A					
16	EXPANSION CARD #2, DI22-DI27	A					
17	EXPANSION CARD #2, DO26-DO33, AO02	A					
18	EXPANSION CARD #3, DI28-DI33	A					
19	EXPANSION CARD #3, DO34-DO41, AO03	A					
20	EXPANSION CARD #4, DI34-DI39	A					
21	EXPANSION CARD #4, DO42-DO49, AO04	A					
22	HARDWARE INTERLOCKS	A					
23	AGS SIGNALS	A					
24	DOSING PUMPS	A					
51	CABLES, PANEL CS AND SS	A					
52	CABLES, PRINTER	A					
53	CABLES, AUTOSCANNER	A					

DRAWN BY	CHECKED BY (GETINGE)	APPROVAL (GETINGE)	DATE (APP.)	PROJECT NUMBER
MHn	JSn	JSn	2006-01-02	

GETINGE
GETINGE DISINFECTION
P.O. BOX 1505
SE 352 15 VAXJO
SWEDEN

UTENSIL WASHER TYPE 88-5 ST
CIRCUIT DIAGRAM
CONTENTS OF DRAWINGS

DRAWING NUMBER	SHEET
5027558	1
DATE / REV.	NEXT SHEET
2005-05-16 / A	2

REV:	NOTE:	SIGN.	DATE:
A	PU06-0122	HS	070816

Downloaded from www.Manualslib.com manuals search engine

THIS DRAWING CONTAINS CONFIDENTIAL INFORMATION AND REMAINS THE PROPERTY OF GETINGE DISINFECTION AB WITHOUT WHOSE PERMISSION IT MAY NOT BE COPIED, SHOWN OR HANDED TO A THIRD PART OR USED AT THE BASIS OF ALTERNATE DESIGNS

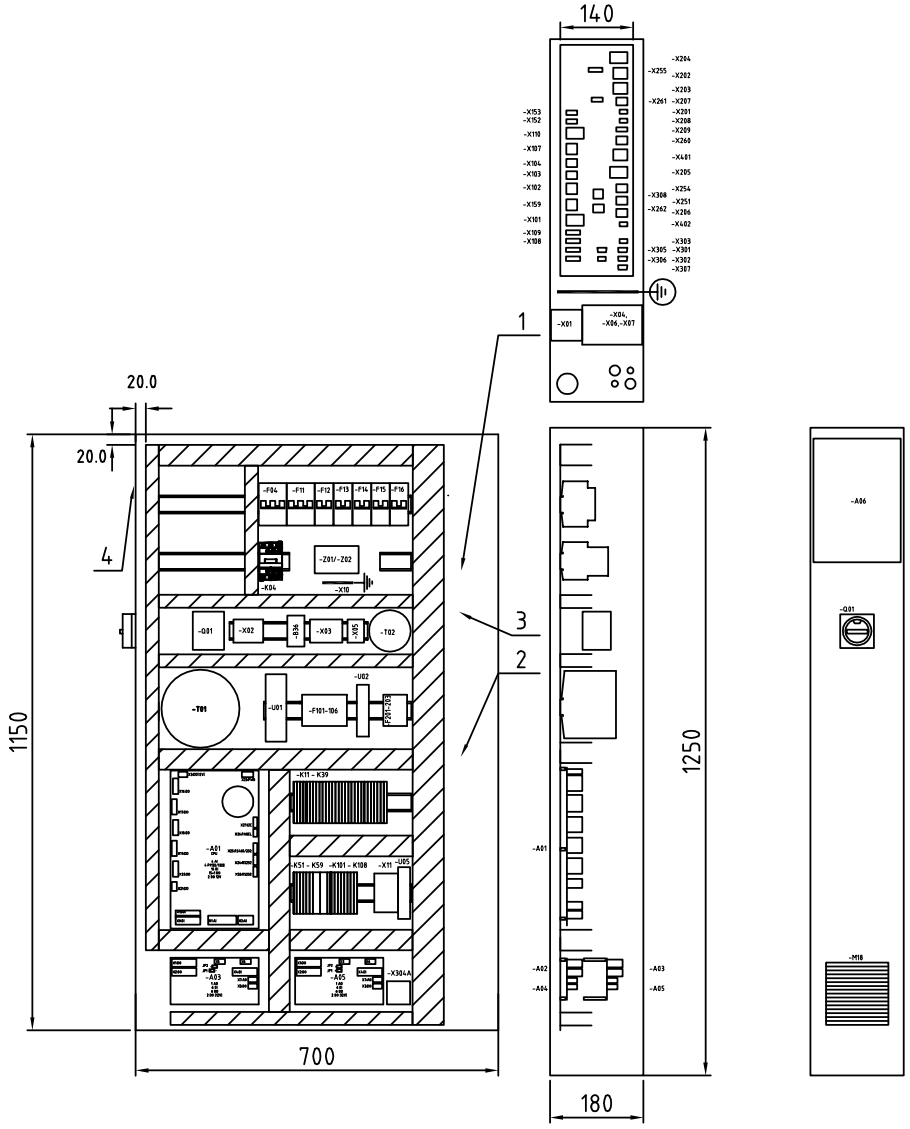

FOLLOWING COMPONENTS ARE OPTIONS:

-T01
-U02
-U05

WIRES USED IN MACHINE:

ACCORDING TO UL STYLE 1015, 600V 105C.
IF OTHER TYPE OF WIRE IS USED THIS IS SPECIFIED IN THE WIRING DIAGRAMS.

1) Connection point for power circuit.

2) Connection point for control voltage.

3) Label with fuse terminal description (5024156-00).

4) Label with manufacturers approval of electrical cabinet.

DRAWN BY	CHECKED BY (GETINGE)	APPROVAL (GETINGE)	DATE (APP.)	PROJECT NUMBER
MHn	JSn	JSn	2006-01-02	

GETINGE
GETINGE DISINFECTION
P.O. BOX 1505
SE 352 15 VAXJO
SWEDEN

UTENSIL WASHER TYPE 88-5 ST
ELECTRICAL CABINET LEFT SIDE
STEAM HEATED

DRAWING NUMBER	SHEET
5027558	2
DATE / REV.	NEXT SHEET
2005-05-16 / A	3

REV:	NOTE:	SIGN.	DATE:
A	PU06-0122	HS	070816

Downloaded from www.Manualslib.com manuals search engine

THIS DRAWING CONTAINS CONFIDENTIAL INFORMATION AND REMAINS THE PROPERTY OF GETINGE DISINFECTION AB WITHOUT WHOSE PERMISSION IT MAY NOT BE COPIED, SHOWN OR HANDED TO A THIRD PART OR USED AT THE BASIS OF ALTERNATE DESIGNS

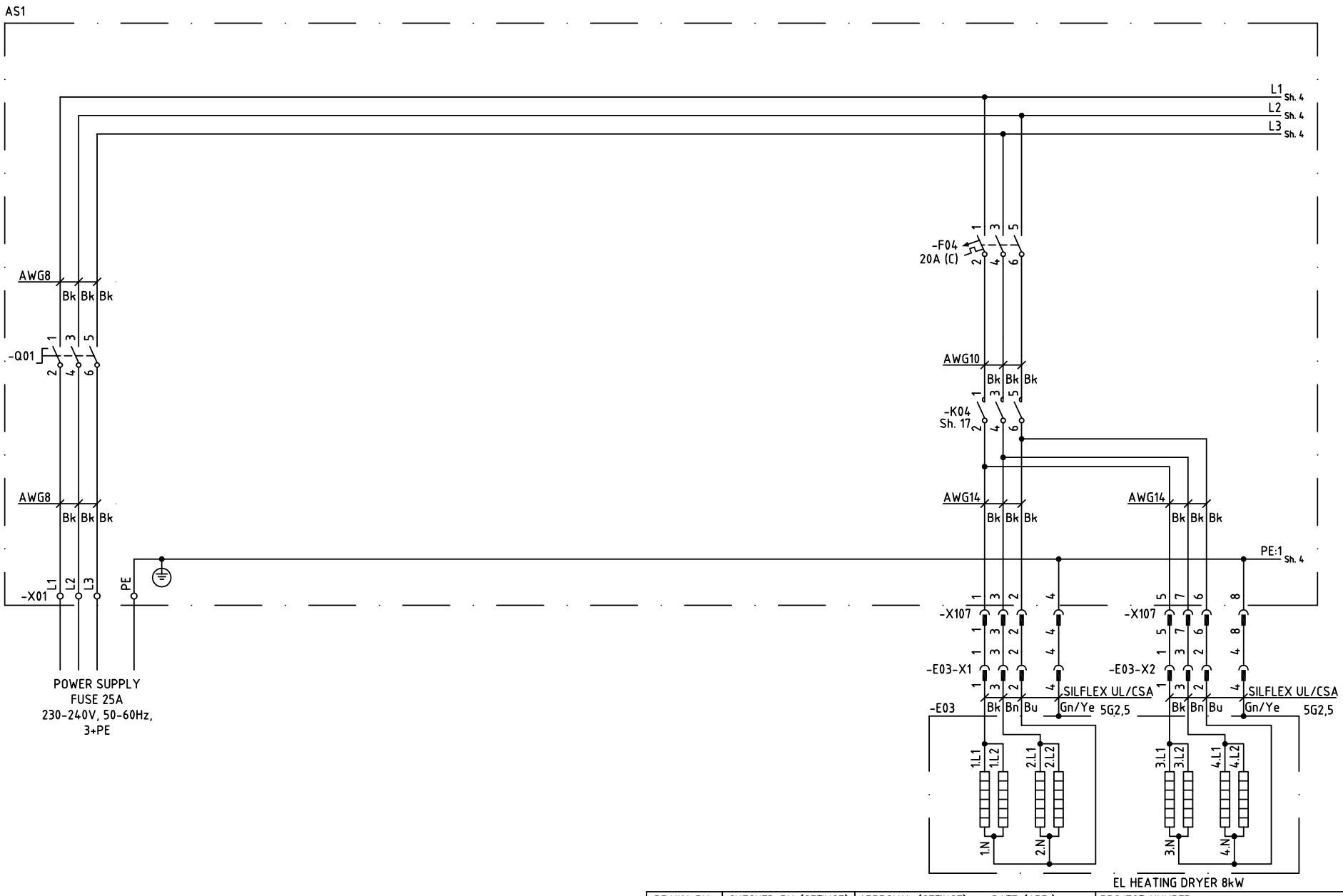

DRAWN BY	CHECKED BY (GETINGE)	APPROVAL (GETINGE)	DATE (APP.)	PROJECT NUMBER
MHn	JSn	JSn	2006-01-02	

GETINGE
GETINGE DISINFECTION
P.O. BOX 1505
SE 352 15 VAXJO
SWEDEN

UTENSIL WASHER TYPE 88-5 ST
CIRCUIT DIAGRAM
MAIN CIRCUIT

DRAWING NUMBER	SHEET
5027558	3
DATE / REV.	NEXT SHEET
2005-05-16 / A	4

REV:	NOTE:	SIGN.	DATE:
A	PU06-0122	HS	070816

Downloaded from www.Manualslib.com manuals search engine

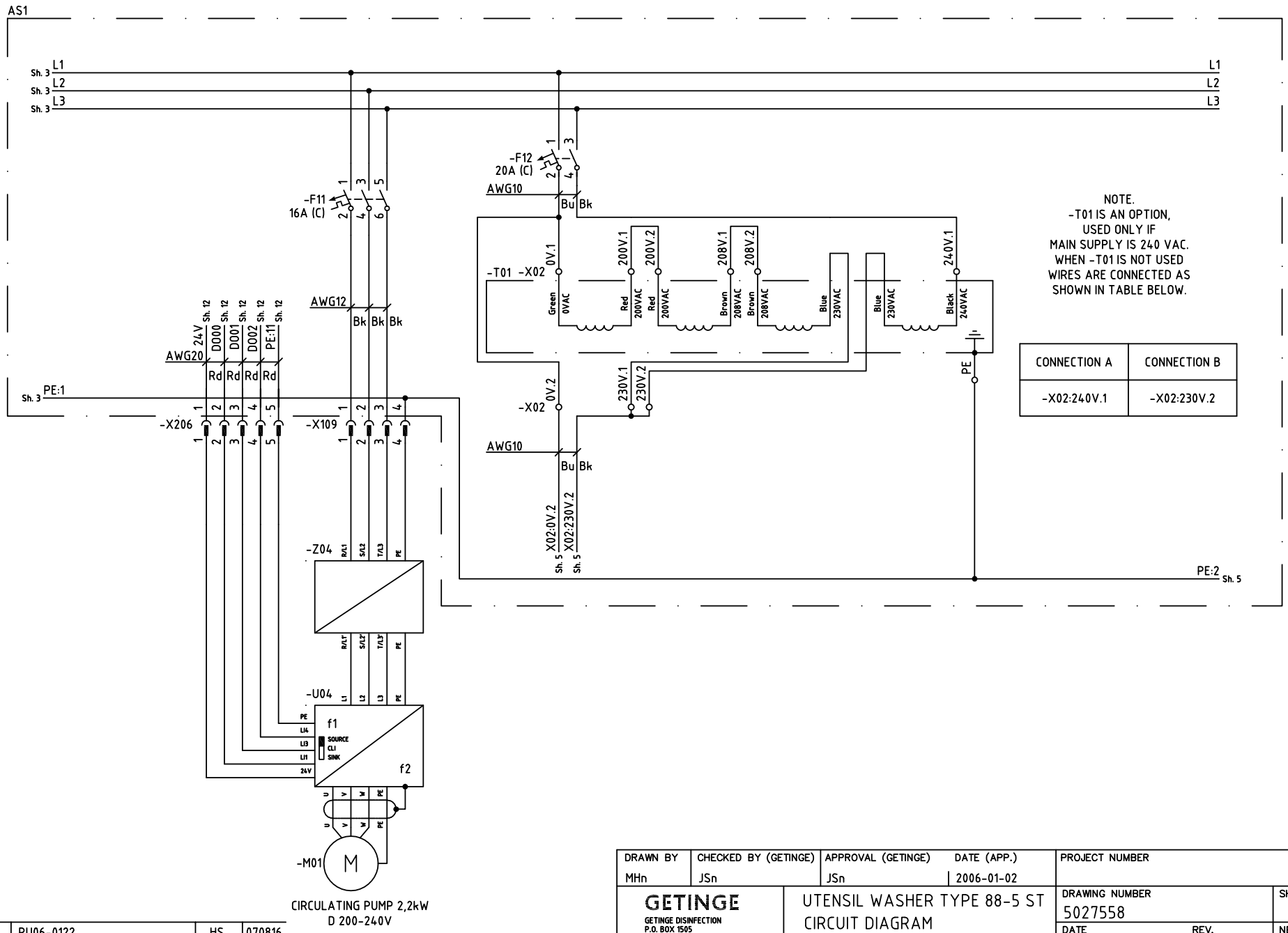

A	PU06-0122	HS	070816
REV:	NOTE:	SIGN.	DATE:

DRAWN BY	CHECKED BY (GETINGE)	APPROVAL (GETINGE)	DATE (APP.)	PROJECT NUMBER
MHn	JSn	JSn	2006-01-02	

GETINGE
GETINGE DISINFECTION
P.O. BOX 1505
SE 352 15 VAXJO
SWEDEN

UTENSIL WASHER TYPE 88-5 ST
CIRCUIT DIAGRAM
MAIN CIRCUIT

DRAWING NUMBER	SHEET
5027558	4
DATE / REV.	NEXT SHEET
2005-05-16 / A	5

Downloaded from www.Manualslib.com manuals search engine

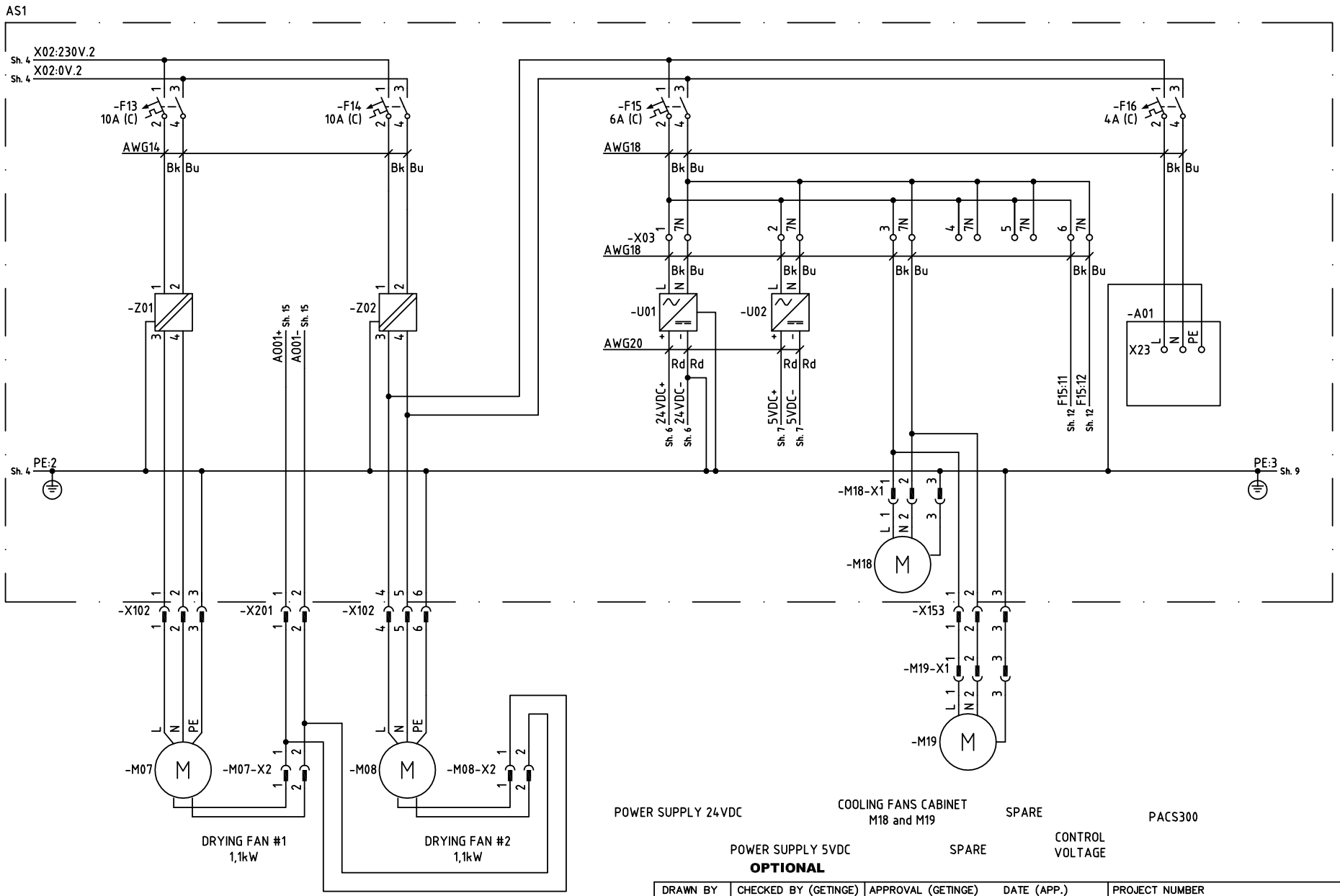

DRAWN BY	CHECKED BY (GETINGE)	APPROVAL (GETINGE)	DATE (APP.)	PROJECT NUMBER
MHn	JSn	JSn	2006-01-02	

GETINGE
GETINGE DISINFECTION
P.O. BOX 1505
SE 352 15 VAXJO
SWEDEN

UTENSIL WASHER TYPE 88-5 ST
CIRCUIT DIAGRAM
230VAC

DRAWING NUMBER	SHEET
5027558	5
DATE / REV.	NEXT SHEET
2005-05-16 / A	6

REV:	NOTE:	SIGN.	DATE:
A	PU06-0122	HS	070816

Downloaded from www.Manualslib.com manuals search engine

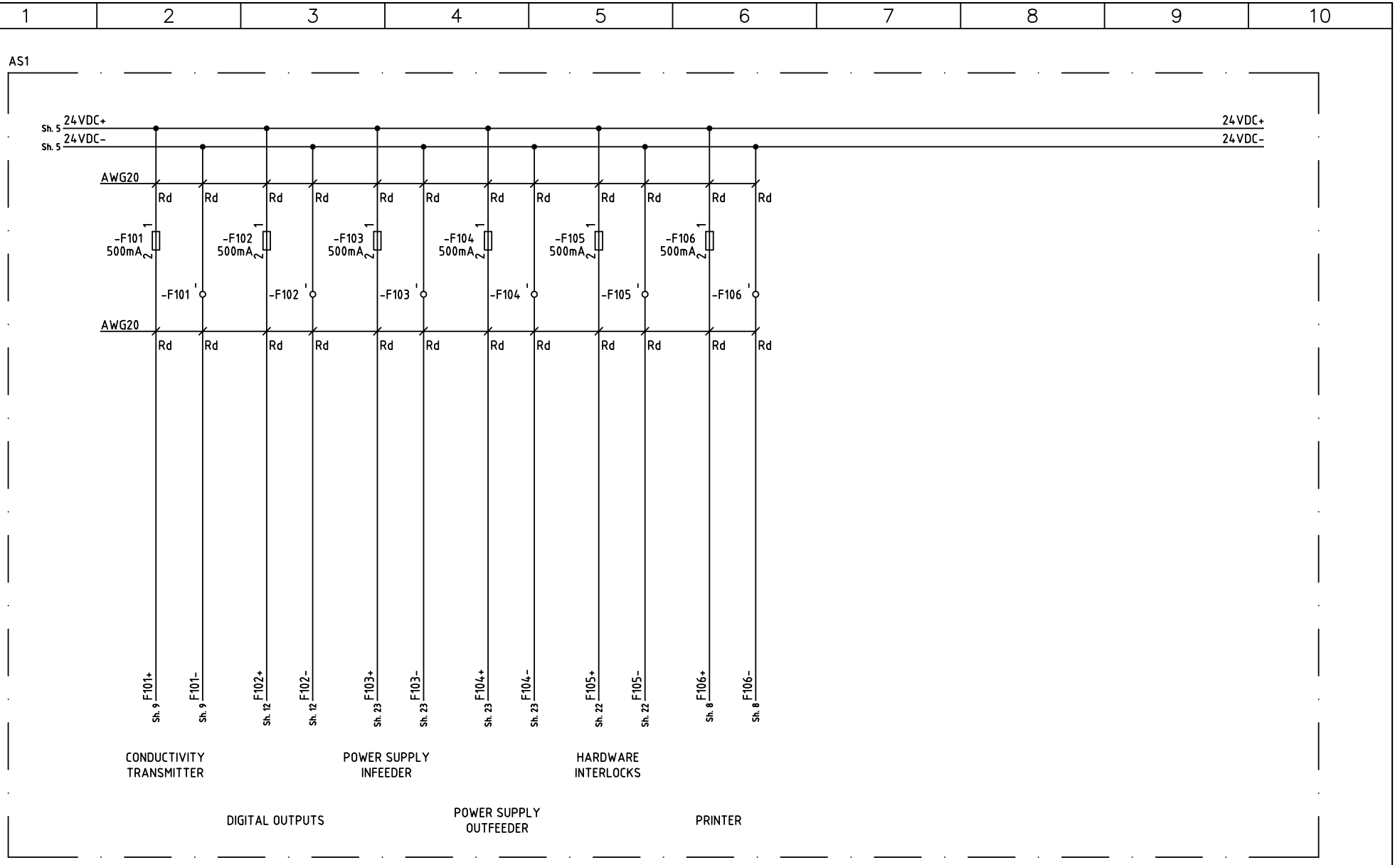

A	PU06-0122	HS	070816
REV:	NOTE:	SIGN.	DATE:

DRAWN BY	CHECKED BY (GETINGE)	APPROVAL (GETINGE)	DATE (APP.)	PROJECT NUMBER
MHn	JSn	JSn	2006-01-02	

GETINGE
GETINGE DISINFECTION
P.O. BOX 1505
SE 352 15 VAXJO
SWEDEN

UTENSIL WASHER TYPE 88-5 ST
CIRCUIT DIAGRAM
24VDC

DRAWING NUMBER	SHEET
5027558	6
DATE / REV.	NEXT SHEET
2005-05-16 / A	7

Downloaded from www.Manualslib.com manuals search engine

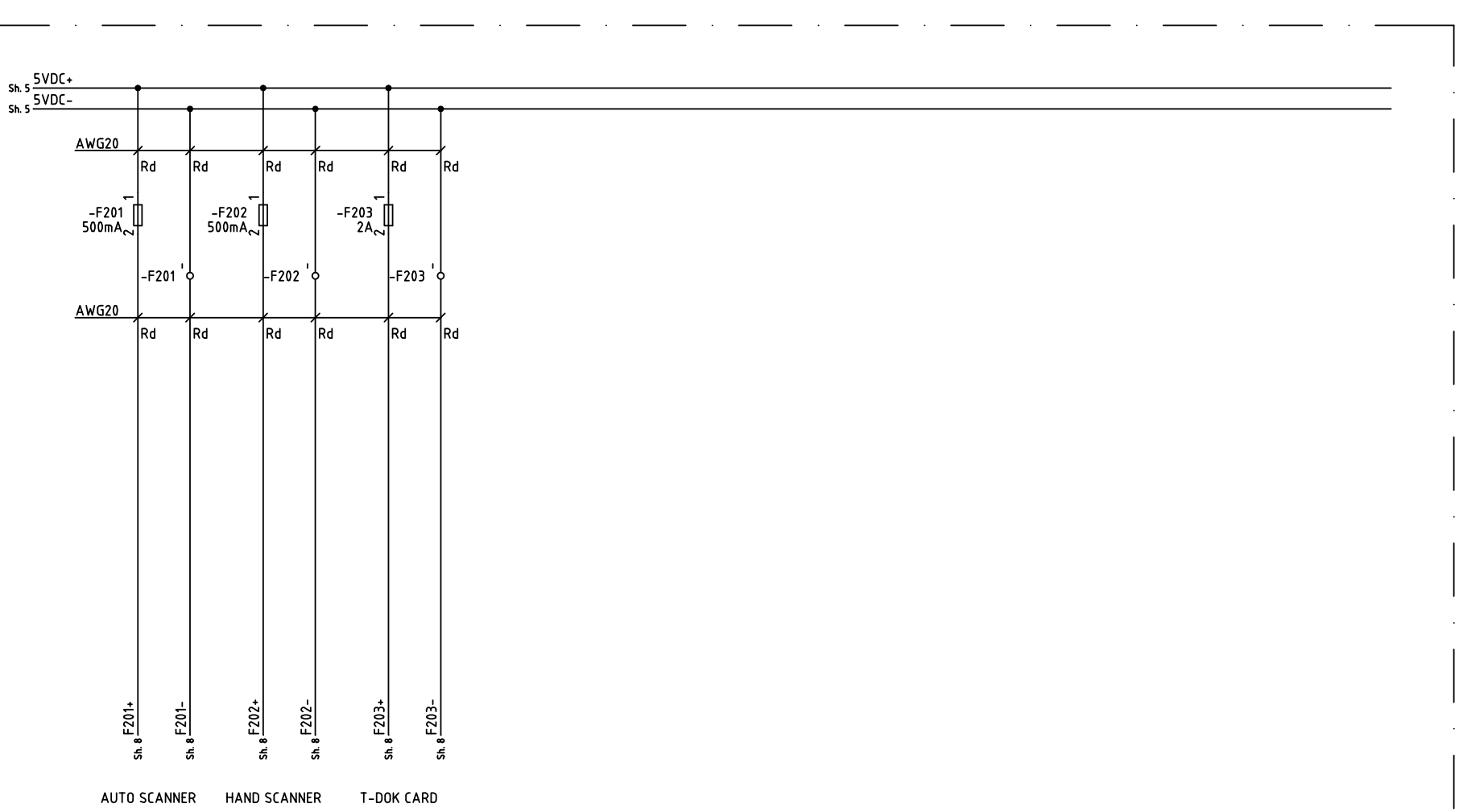

DRAWN BY	CHECKED BY (GETINGE)	APPROVAL (GETINGE)	DATE (APP.)	PROJECT NUMBER
MHn	JSn	JSn	2006-01-02	

GETINGE
GETINGE DISINFECTION
P.O. BOX 1505
SE 352 15 VAXJO
SWEDEN

UTENSIL WASHER TYPE 88-5 ST
CIRCUIT DIAGRAM
5VDC

DRAWING NUMBER	SHEET
5027558	7
DATE / REV.	NEXT SHEET
2005-05-16 / A	8

REV:	NOTE:	SIGN.	DATE:
A	PU06-0122	HS	070816

Downloaded from www.Manualslib.com manuals search engine

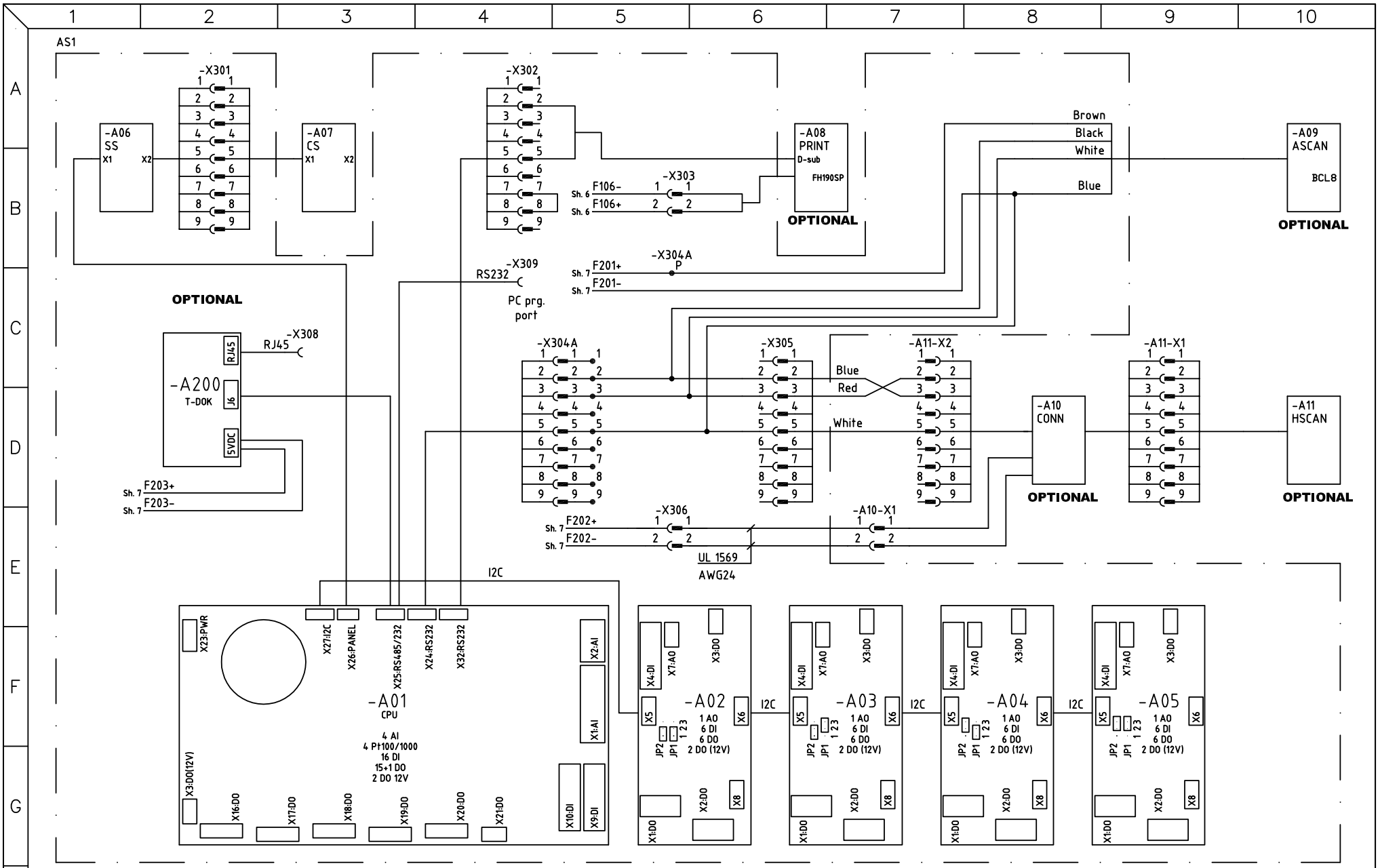

DRAWN BY	CHECKED BY (GETINGE)	APPROVAL (GETINGE)	DATE (APP.)	PROJECT NUMBER
MHn	JSn	JSn	2006-01-02	

GETINGE
GETINGE DISINFECTION
P.O. BOX 1505
SE 352 15 VAXJO
SWEDEN

UTENSIL WASHER TYPE 88-5 ST
CIRCUIT DIAGRAM
PACS300

DRAWING NUMBER	SHEET
5027558	8
DATE / REV.	NEXT SHEET
2005-05-16 / A	9

A	PU06-0122	HS	070816
REV:	NOTE:	SIGN.	DATE:

Downloaded from www.Manualslib.com manuals search engine

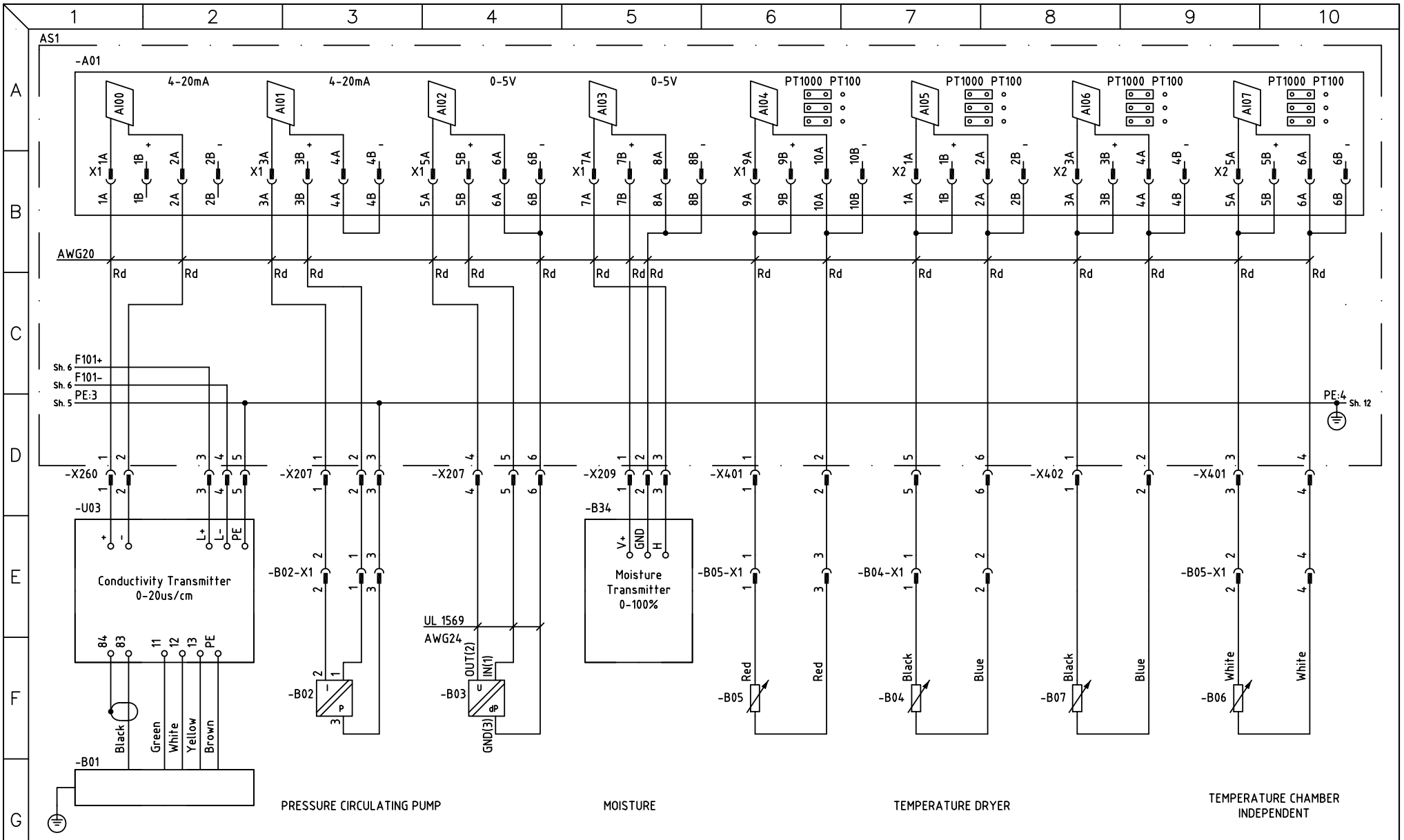

DRAWN BY	CHECKED BY (GETINGE)	APPROVAL (GETINGE)	DATE (APP.)	PROJECT NUMBER
MHn	JSn	JSn	2006-01-02	

GETINGE
GETINGE DISINFECTION
P.O. BOX 1505
SE 352 15 VAXJO
SWEDEN

UTENSIL WASHER TYPE 88-5 ST
CIRCUIT DIAGRAM
AI00-AI07

DRAWING NUMBER	SHEET
5027558	9
DATE / REV.	NEXT SHEET
2005-05-16 / A	10

A	PU06-0122	HS	070816
REV:	NOTE:	SIGN.	DATE:

Downloaded from www.Manualslib.com manuals search engine

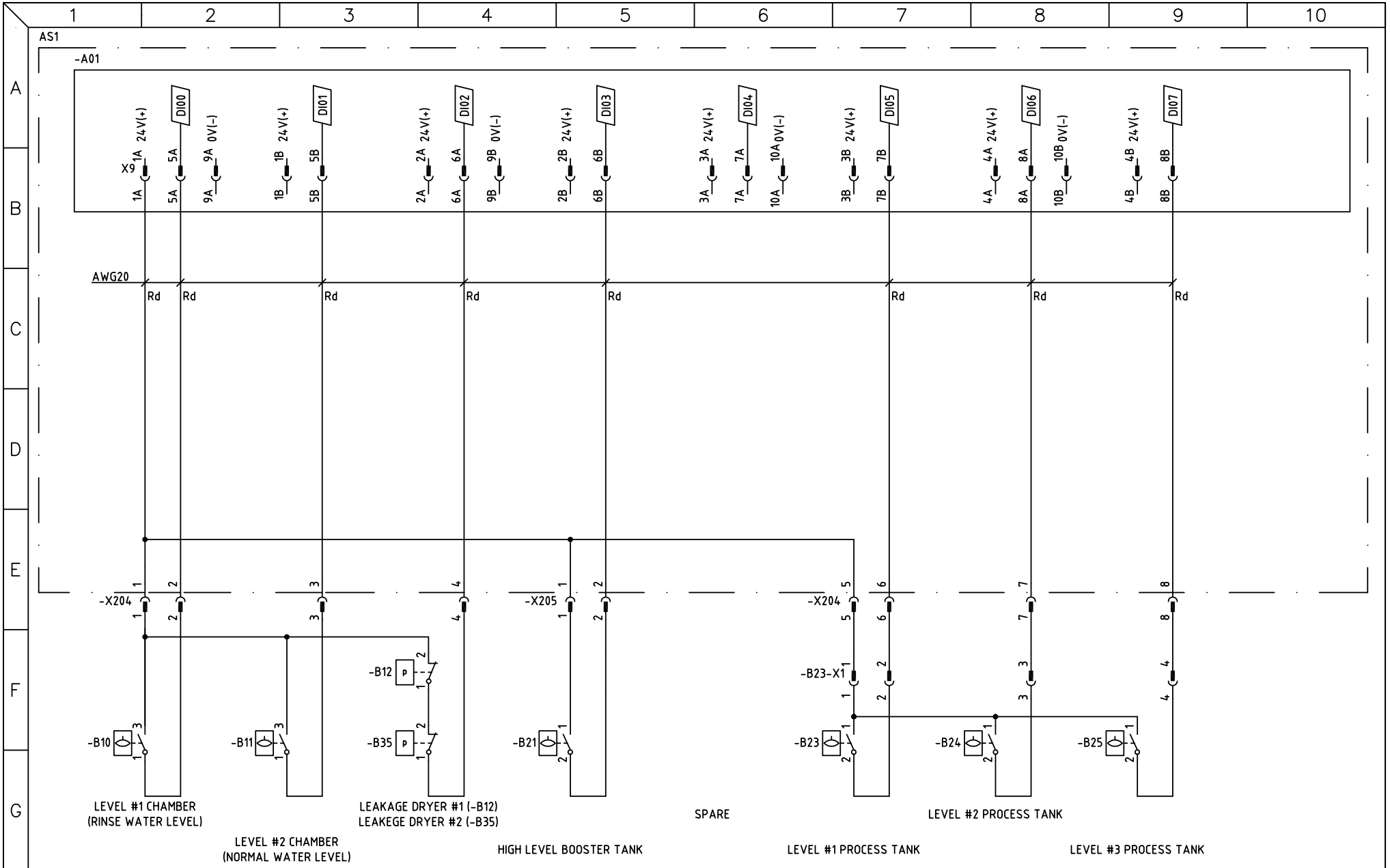

DRAWN BY	CHECKED BY (GETINGE)	APPROVAL (GETINGE)	DATE (APP.)	PROJECT NUMBER
MHn	JSn	JSn	2006-01-02	

GETINGE
GETINGE DISINFECTION
P.O. BOX 1505
SE 352 15 VAXJO
SWEDEN

UTENSIL WASHER TYPE 88-5 ST
CIRCUIT DIAGRAM
DI00-DI07

DRAWING NUMBER	SHEET
5027558	10
DATE / REV.	NEXT SHEET
2005-05-16 / A	11

REV:	NOTE:	SIGN.	DATE:
A	PU06-0122	HS	070816

Downloaded from www.Manualslib.com manuals search engine

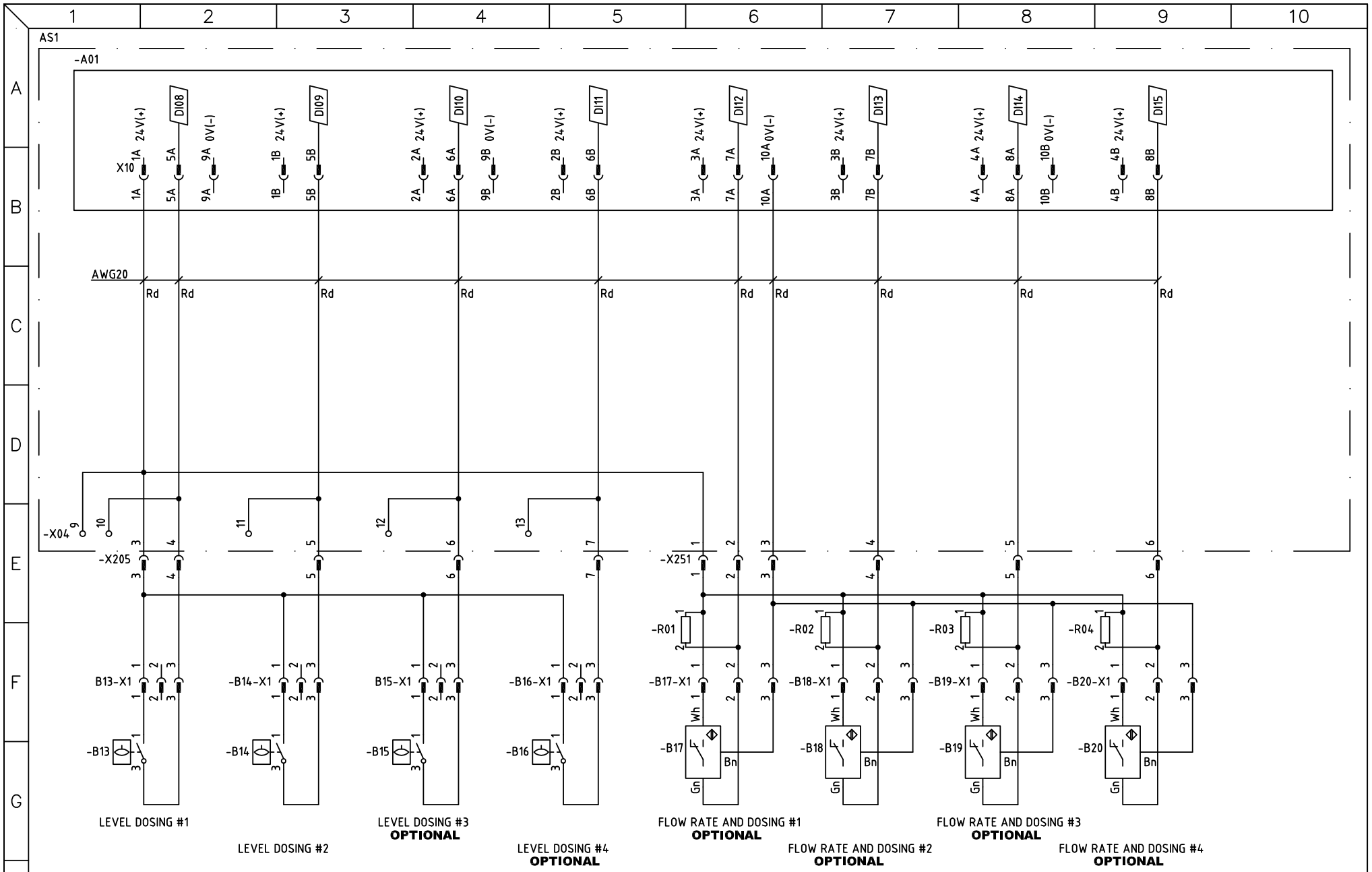

DRAWN BY	CHECKED BY (GETINGE)	APPROVAL (GETINGE)	DATE (APP.)	PROJECT NUMBER
MHn	JSn	JSn	2006-01-02	

GETINGE
GETINGE DISINFECTION
P.O. BOX 1505
SE 352 15 VAXJO
SWEDEN

UTENSIL WASHER TYPE 88-5 ST
CIRCUIT DIAGRAM
DI08-DI15

DRAWING NUMBER	SHEET
5027558	11
DATE / REV.	NEXT SHEET
2005-05-16 / A	12

A	PU06-0122	HS	070816
REV:	NOTE:	SIGN.	DATE:

Downloaded from www.Manualslib.com manuals search engine

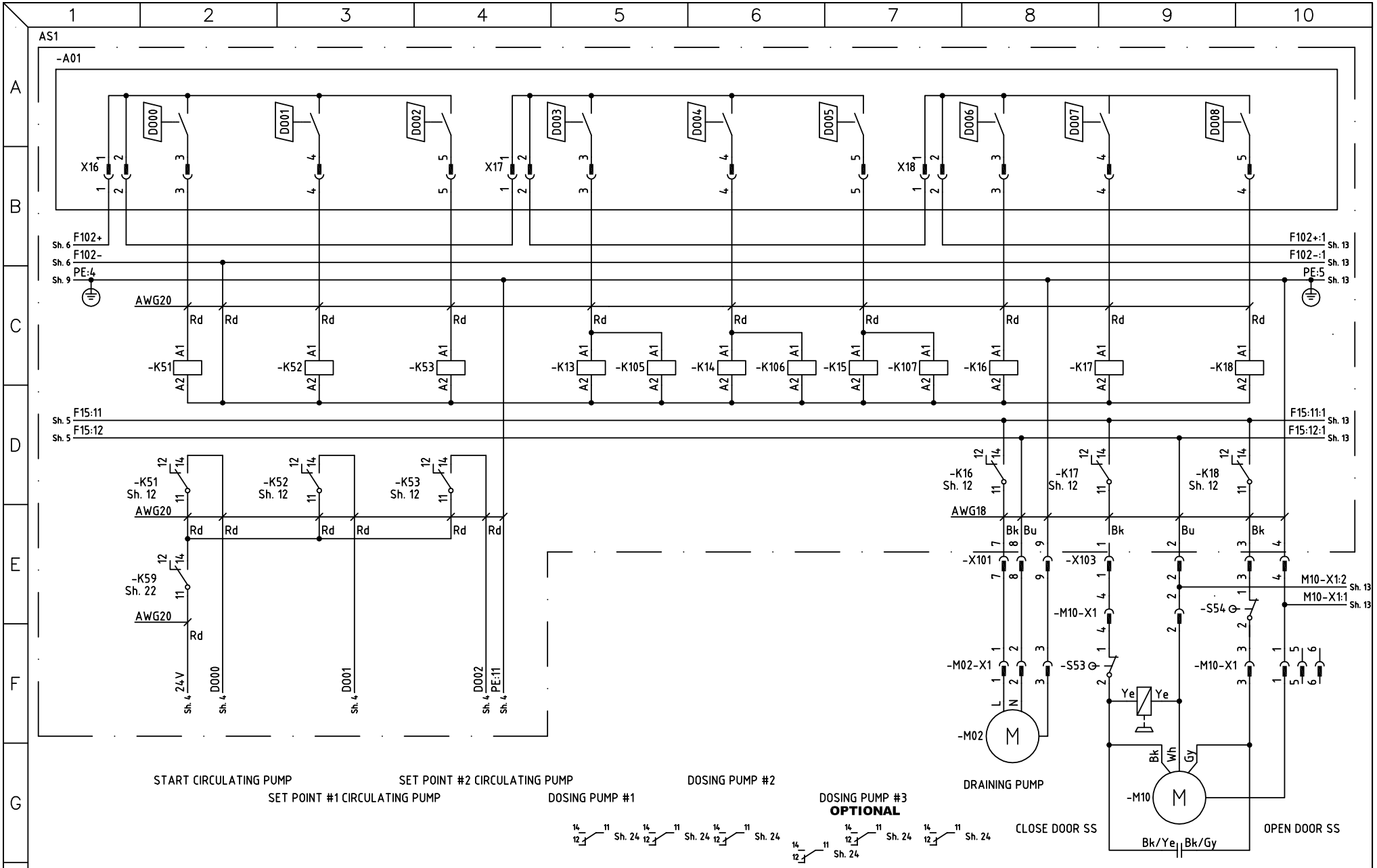

DRAWN BY	CHECKED BY (GETINGE)	APPROVAL (GETINGE)	DATE (APP.)	PROJECT NUMBER
MHn	JSn	JSn	2006-01-02	

GETINGE
GETINGE DISINFECTION
P.O. BOX 1505
SE 352 15 VAXJO
SWEDEN

UTENSIL WASHER TYPE 88-5 ST
CIRCUIT DIAGRAM
D000-D008

DRAWING NUMBER	SHEET
5027558	12
DATE / REV.	NEXT SHEET
2005-05-16 / A	13

A	PU06-0122	HS	070816
REV:	NOTE:	SIGN.	DATE:

Downloaded from www.Manualslib.com manuals search engine

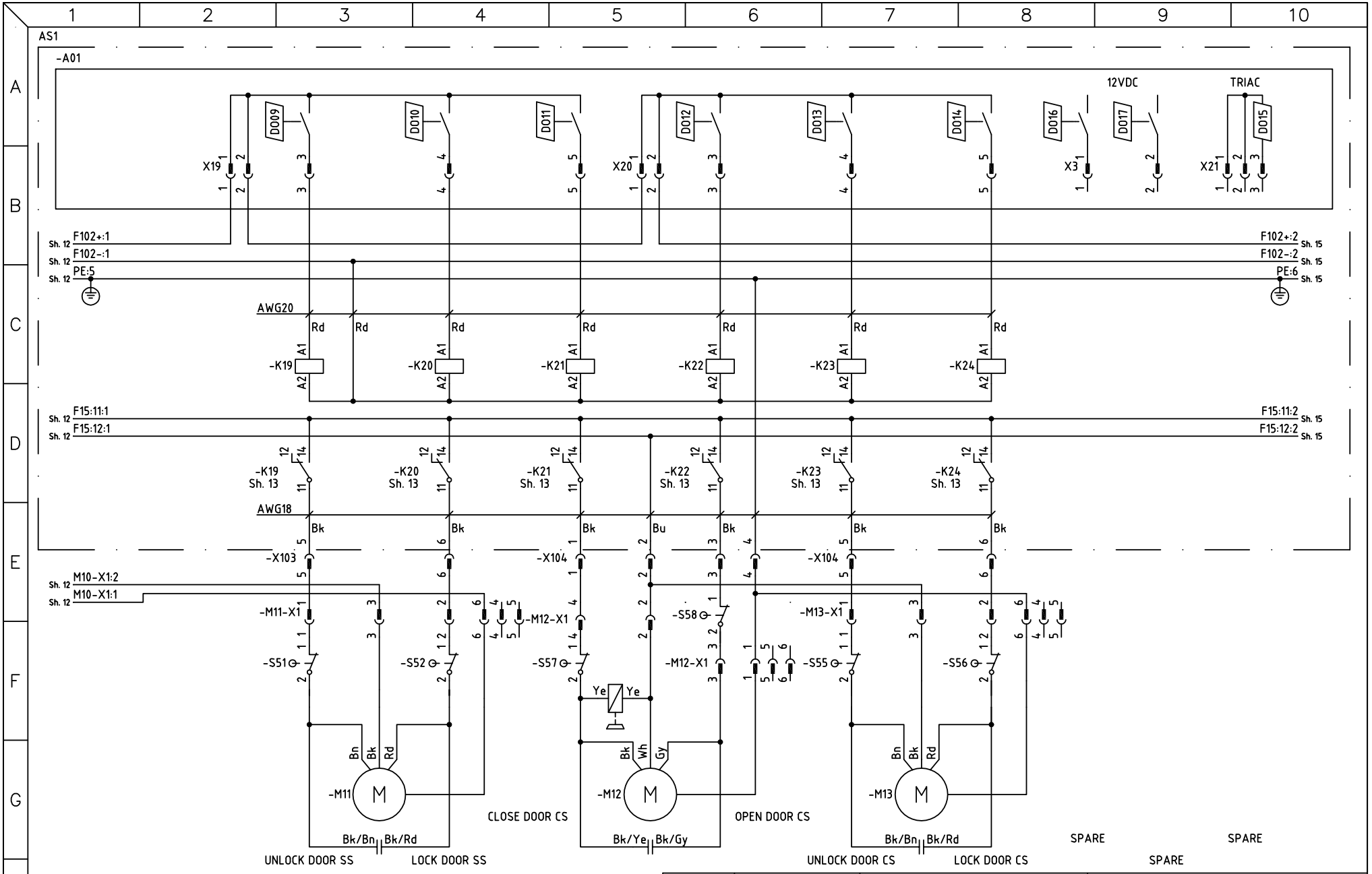

DRAWN BY	CHECKED BY (GETINGE)	APPROVAL (GETINGE)	DATE (APP.)	PROJECT NUMBER
MHn	JSn	JSn	2006-01-02	

GETINGE
GETINGE DISINFECTION
P.O. BOX 1505
SE 352 15 VAXJO
SWEDEN

UTENSIL WASHER TYPE 88-5 ST
CIRCUIT DIAGRAM
D009-D017

DRAWING NUMBER	SHEET
5027558	13
DATE / REV.	NEXT SHEET
2005-05-16 / A	14

A	PU06-0122	HS	070816
REV:	NOTE:	SIGN.	DATE:

Downloaded from www.Manualslib.com manuals search engine

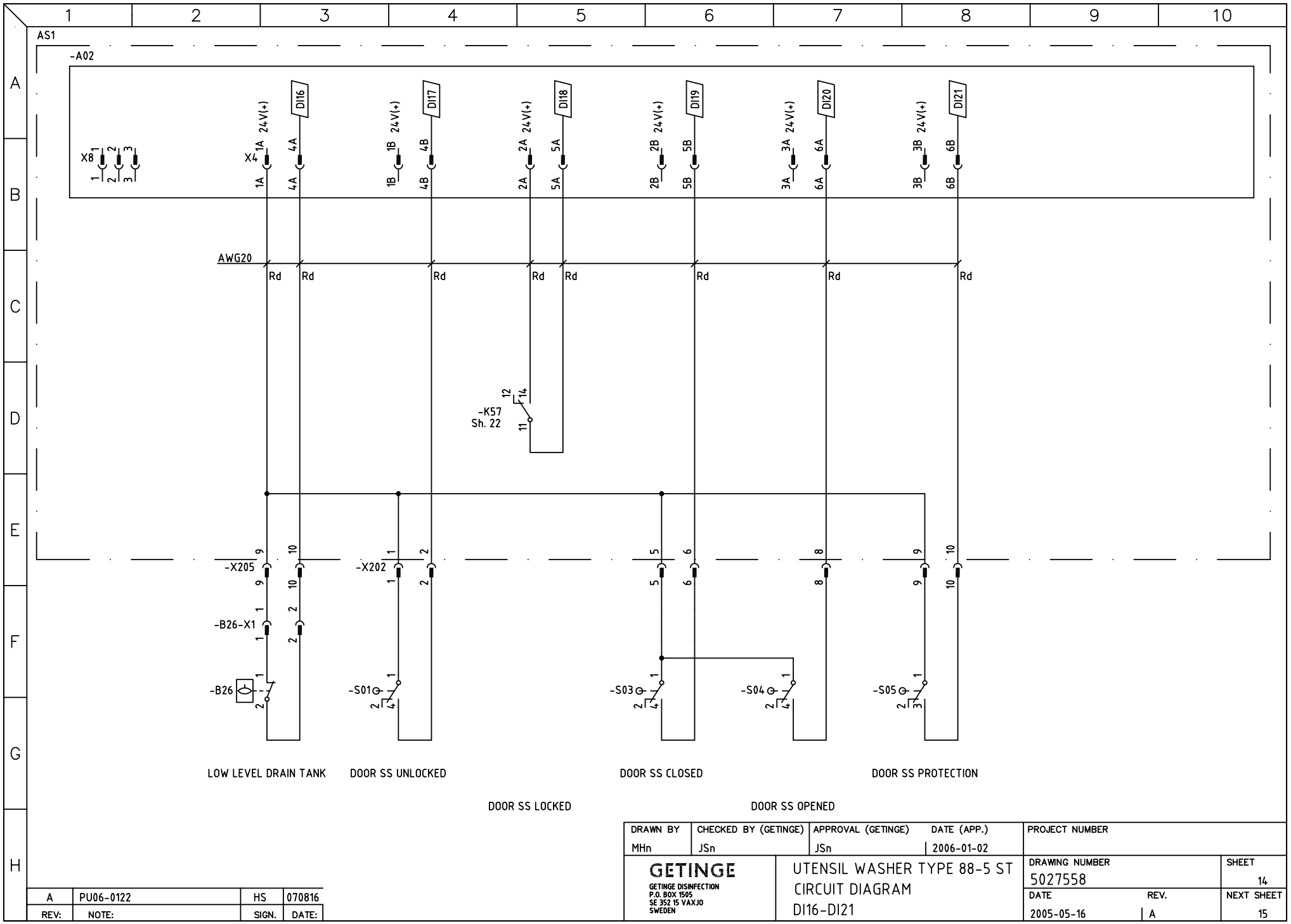

DRAWN BY	CHECKED BY (GETINGE)	APPROVAL (GETINGE)	DATE (APP.)	PROJECT NUMBER
MHn	JSn	JSn	2006-01-02	

GETINGE
GETINGE DISINFECTION
P.O. BOX 1505
SE 352 15 VAXJO
SWEDEN

UTENSIL WASHER TYPE 88-5 ST
CIRCUIT DIAGRAM
DI16-DI21

DRAWING NUMBER	SHEET
5027558	14
DATE / REV.	NEXT SHEET
2005-05-16 / A	15

REV:	NOTE:	SIGN.	DATE:
A	PU06-0122	HS	070816

Downloaded from www.Manualslib.com manuals search engine

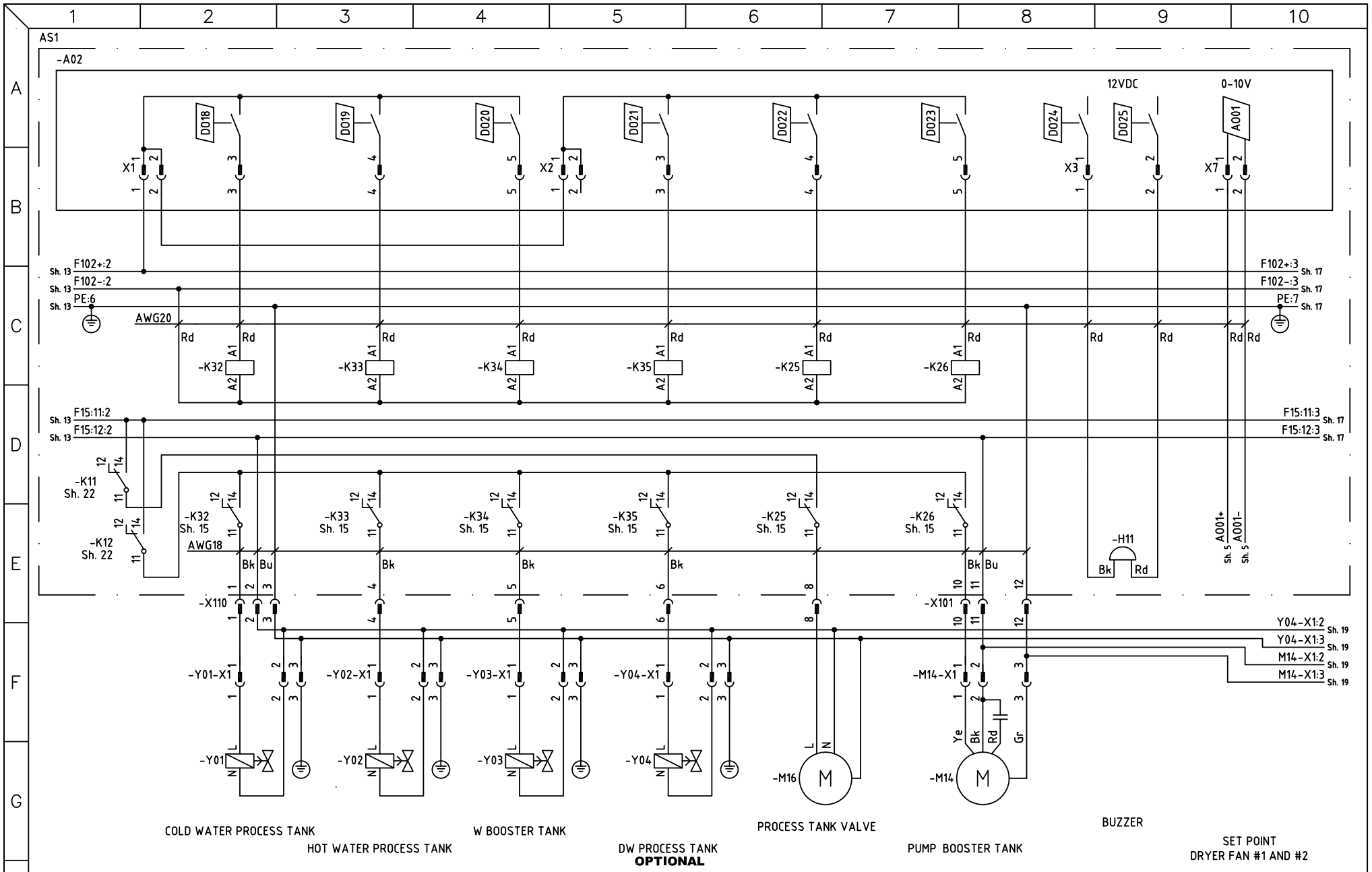

DRAWN BY	CHECKED BY (GETINGE)	APPROVAL (GETINGE)	DATE (APP.)	PROJECT NUMBER
MHn	JSn	JSn	2006-01-02	

GETINGE
GETINGE DISINFECTION
P.O. BOX 1505
SE 352 15 VAXJO
SWEDEN

UTENSIL WASHER TYPE 88-5 ST
CIRCUIT DIAGRAM
D018-D025, A001

DRAWING NUMBER	SHEET
5027558	15
DATE / REV.	NEXT SHEET
2005-05-16 / A	16

A	PU06-0122	HS	070816
REV:	NOTE:	SIGN.	DATE:

Downloaded from www.Manualslib.com manuals search engine

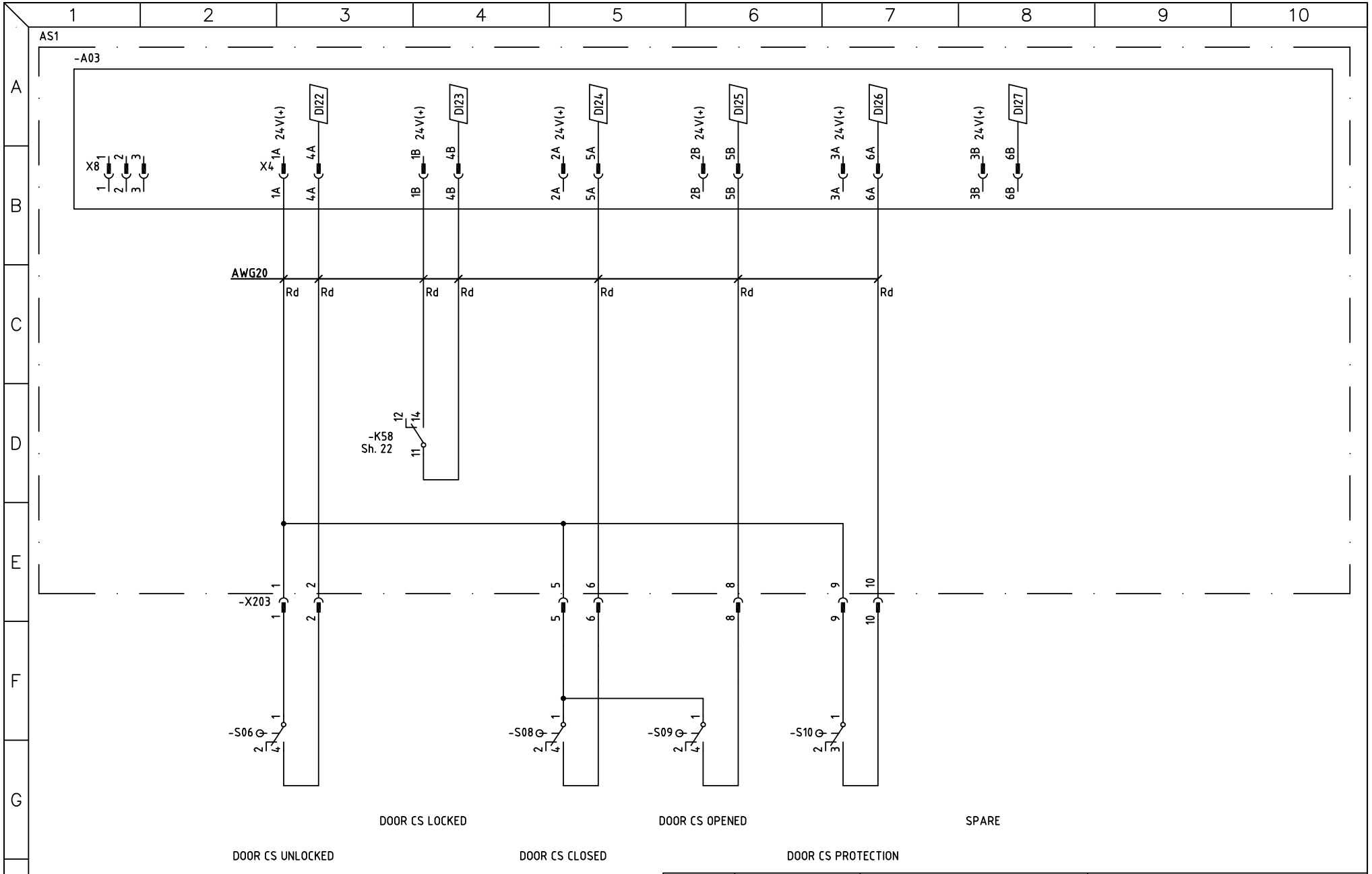

DRAWN BY	CHECKED BY (GETINGE)	APPROVAL (GETINGE)	DATE (APP.)	PROJECT NUMBER
MHn	JSn	JSn	2006-01-02	

GETINGE
GETINGE DISINFECTION
P.O. BOX 1505
SE 352 15 VAXJO
SWEDEN

UTENSIL WASHER TYPE 88-5 ST
CIRCUIT DIAGRAM
DI22-DI27

DRAWING NUMBER	SHEET
5027558	16
DATE / REV.	NEXT SHEET
2005-05-16 / A	17

REV:	NOTE:	SIGN.	DATE:
A	PU06-0122	HS	070816

Downloaded from www.Manualslib.com manuals search engine

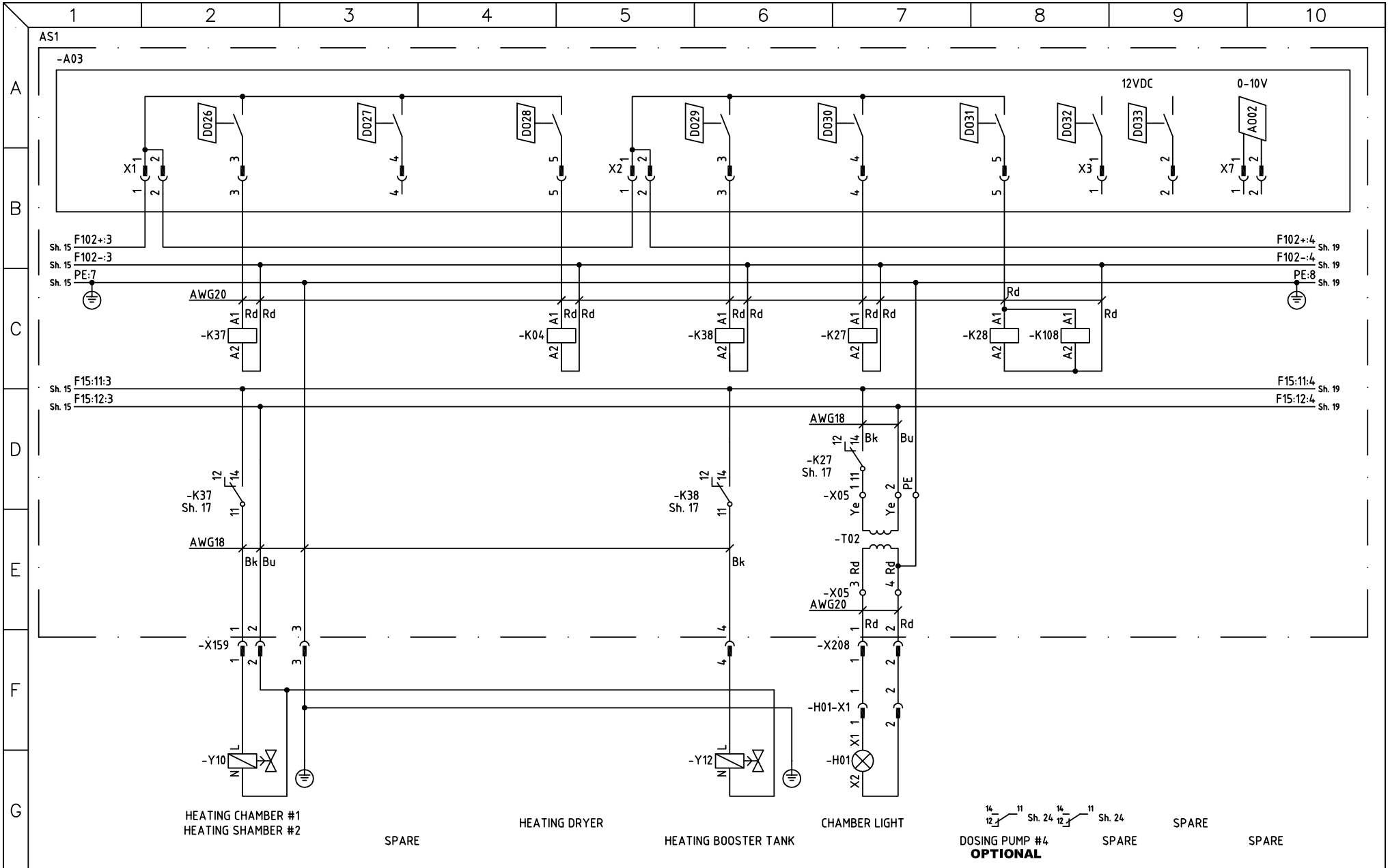

A	PU06-0122	HS	070816
REV:	NOTE:	SIGN.	DATE:

DRAWN BY	CHECKED BY (GETINGE)	APPROVAL (GETINGE)	DATE (APP.)	PROJECT NUMBER	
MHn	JSn	JSn	2006-01-02		

GETINGE
GETINGE DISINFECTION
P.O. BOX 1505
SE 352 15 VAXJO
SWEDEN

UTENSIL WASHER TYPE 88-5 ST
CIRCUIT DIAGRAM
D026-D033, A002

DRAWING NUMBER		SHEET
5027558		17
DATE	REV.	NEXT SHEET
2005-05-16	A	18

Downloaded from www.Manualslib.com manuals search engine

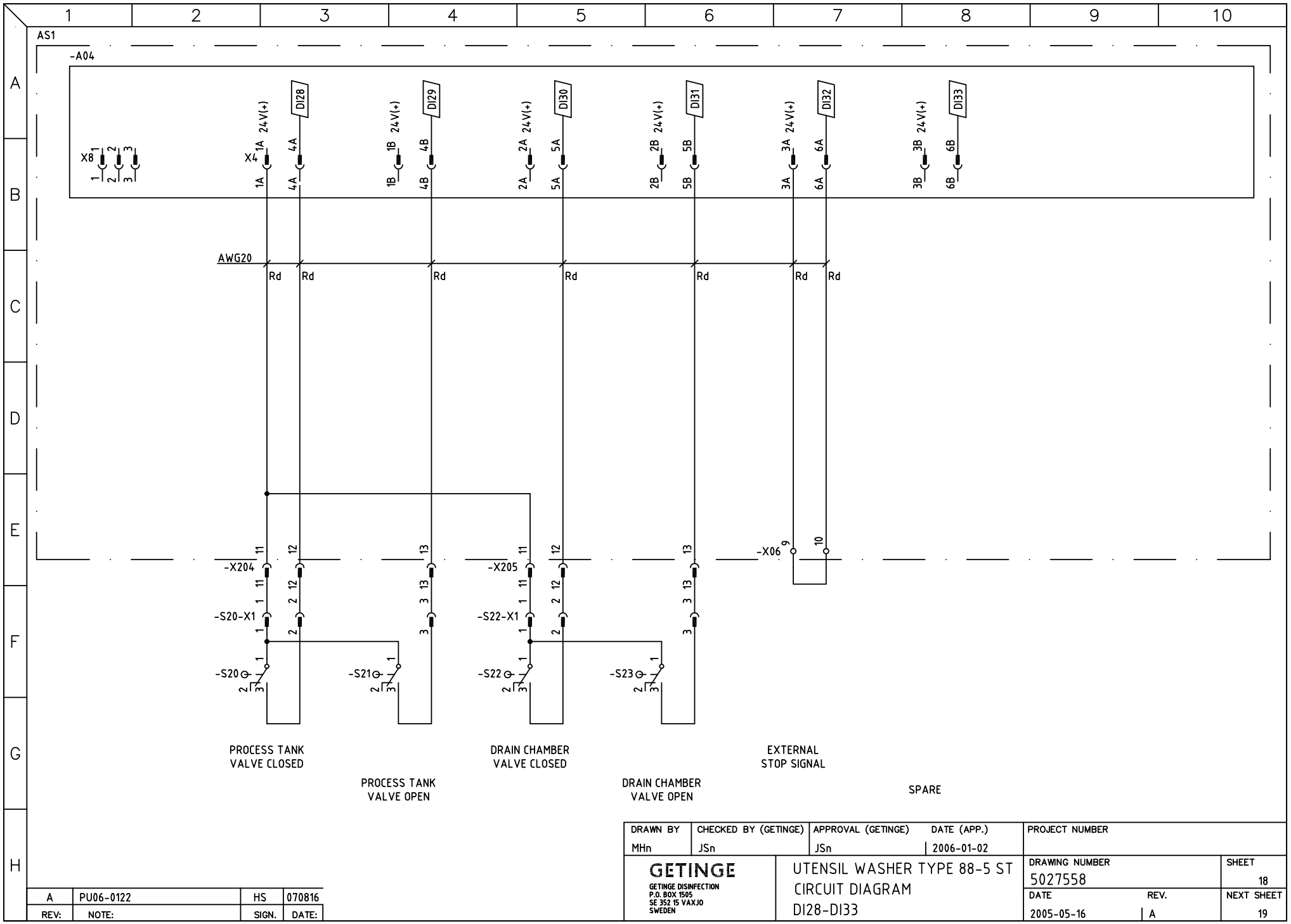

DRAWN BY	CHECKED BY (GETINGE)	APPROVAL (GETINGE)	DATE (APP.)	PROJECT NUMBER
MHn	JSn	JSn	2006-01-02	

GETINGE
GETINGE DISINFECTION
P.O. BOX 1505
SE 352 15 VAXJO
SWEDEN

UTENSIL WASHER TYPE 88-5 ST
CIRCUIT DIAGRAM
DI28-DI33

DRAWING NUMBER	SHEET
5027558	18
DATE / REV.	NEXT SHEET
2005-05-16 / A	19

REV:	NOTE:	SIGN.	DATE:
A	PU06-0122	HS	070816

Downloaded from www.Manualslib.com manuals search engine

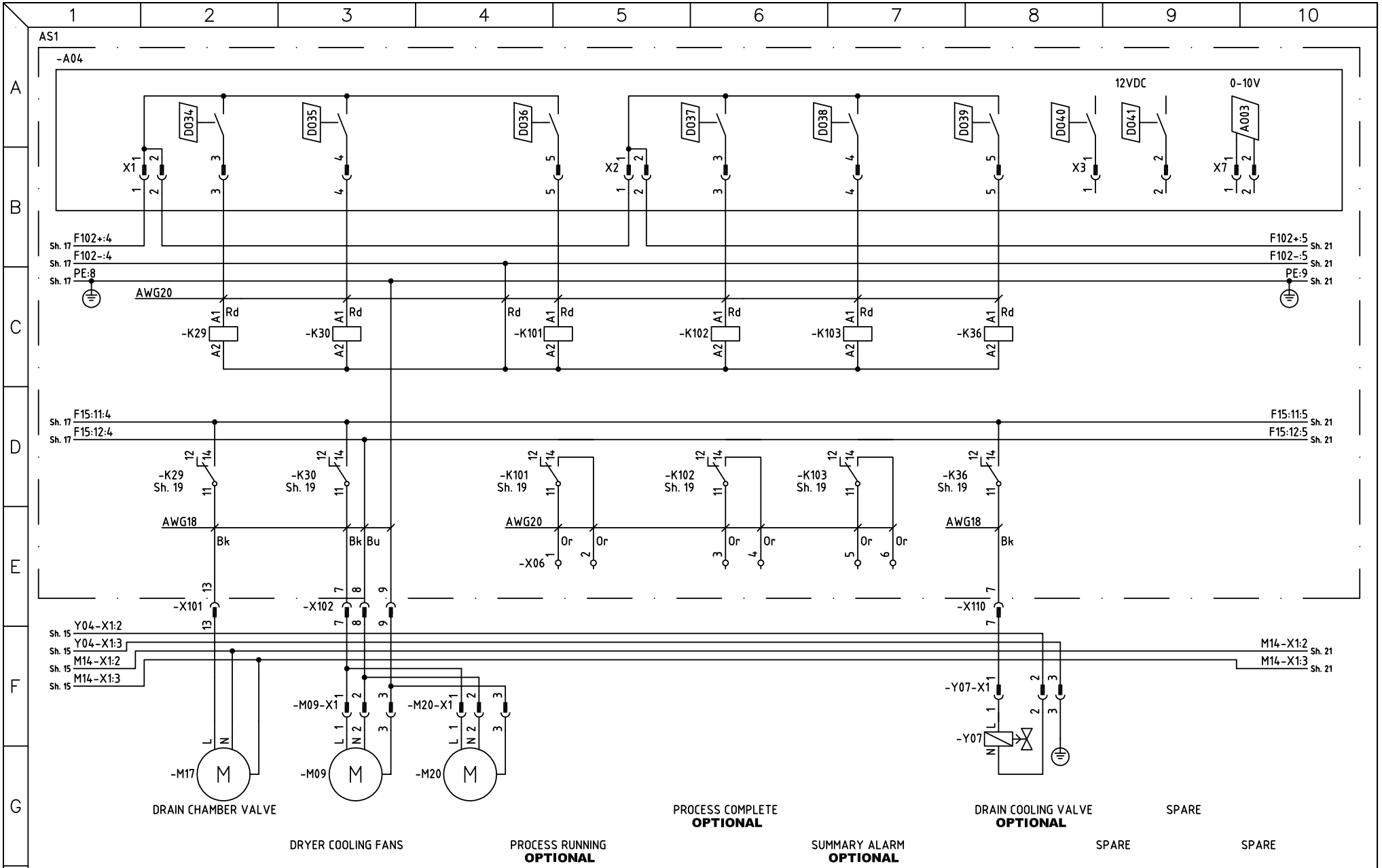

DRAWN BY	CHECKED BY (GETINGE)	APPROVAL (GETINGE)	DATE (APP.)	PROJECT NUMBER
MHn	JSn	JSn	2006-01-02	

GETINGE
GETINGE DISINFECTION
P.O. BOX 1505
SE 352 15 VAXJO
SWEDEN

UTENSIL WASHER TYPE 88-5 ST
CIRCUIT DIAGRAM
D034-D041, A003

DRAWING NUMBER	SHEET
5027558	19
DATE / REV.	NEXT SHEET
2005-05-16 / A	20

A	PU06-0122	HS	070816
REV:	NOTE:	SIGN.	DATE:

Downloaded from www.Manualslib.com manuals search engine

DRAWN BY	CHECKED BY (GETINGE)	APPROVAL (GETINGE)	DATE (APP.)	PROJECT NUMBER
MHn	JSn	JSn	2006-01-02	

GETINGE
GETINGE DISINFECTION
P.O. BOX 1505
SE 352 15 VAXJO
SWEDEN

UTENSIL WASHER TYPE 88-5 ST
CIRCUIT DIAGRAM
DI34-DI39

DRAWING NUMBER	SHEET
5027558	20
DATE / REV.	NEXT SHEET
2005-05-16 / A	21

REV:	NOTE:	SIGN.	DATE:
A	PU06-0122	HS	070816

Downloaded from www.Manualslib.com manuals search engine

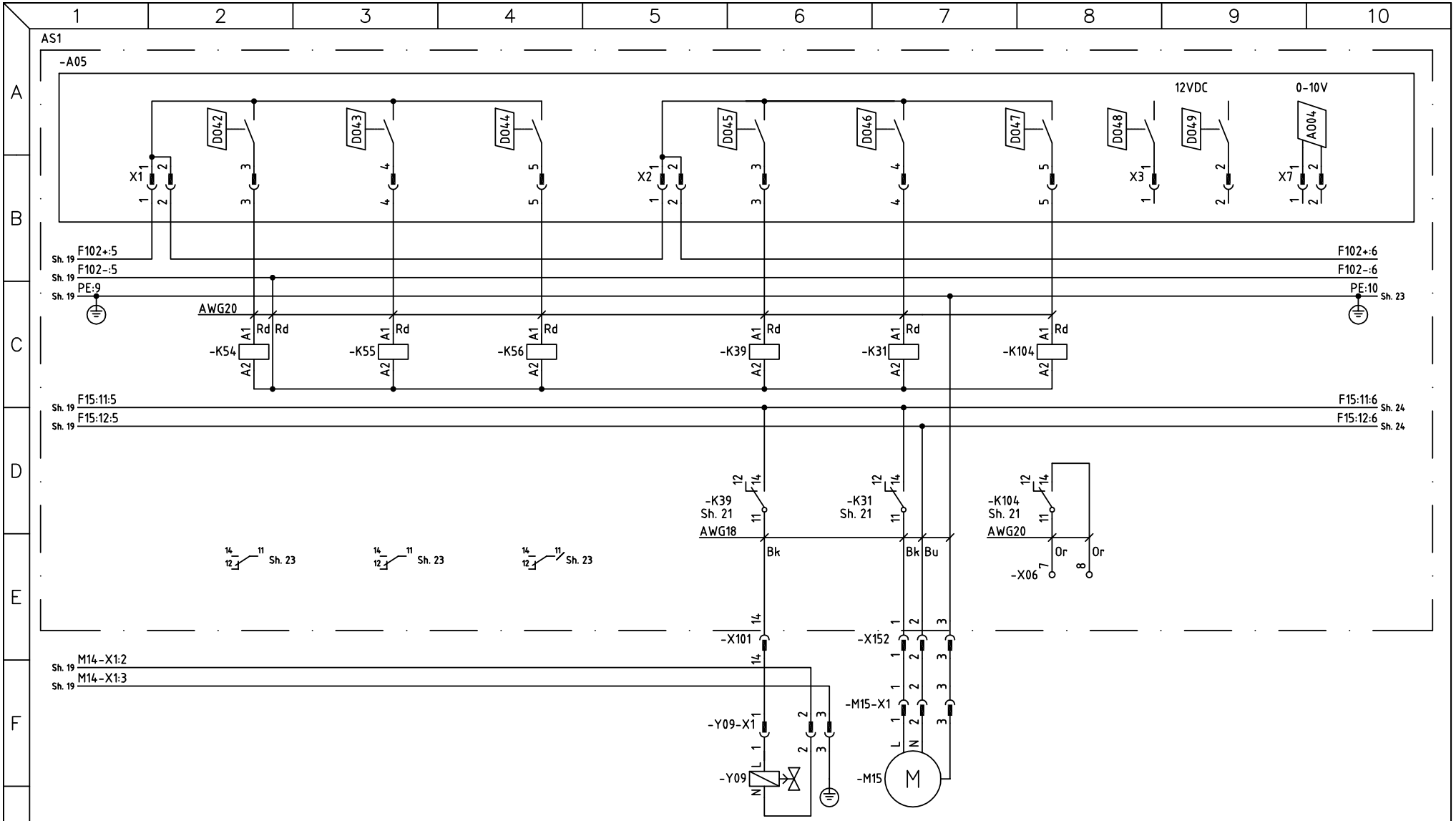

DRAWN BY	CHECKED BY (GETINGE)	APPROVAL (GETINGE)	DATE (APP.)	PROJECT NUMBER
MHn	JSn	JSn	2006-01-02	

GETINGE
GETINGE DISINFECTION
P.O. BOX 1505
SE 352 15 VAXJO
SWEDEN

UTENSIL WASHER TYPE 88-5 ST
CIRCUIT DIAGRAM
D042-D049, A004

DRAWING NUMBER	SHEET
5027558	21
DATE / REV.	NEXT SHEET
2005-05-16 / A	22

REV:	NOTE:	SIGN.	DATE:
A	PU06-0122	HS	070816

Downloaded from www.Manualslib.com manuals search engine

THIS DRAWING CONTAINS CONFIDENTIAL INFORMATION AND REMAINS THE PROPERTY OF GETINGE DISINFECTION AB WITHOUT WHOSE PERMISSION IT MAY NOT BE COPIED, SHOWN OR HANDED TO A THIRD PART OR USED AT THE BASIS OF ALTERNATE DESIGNS

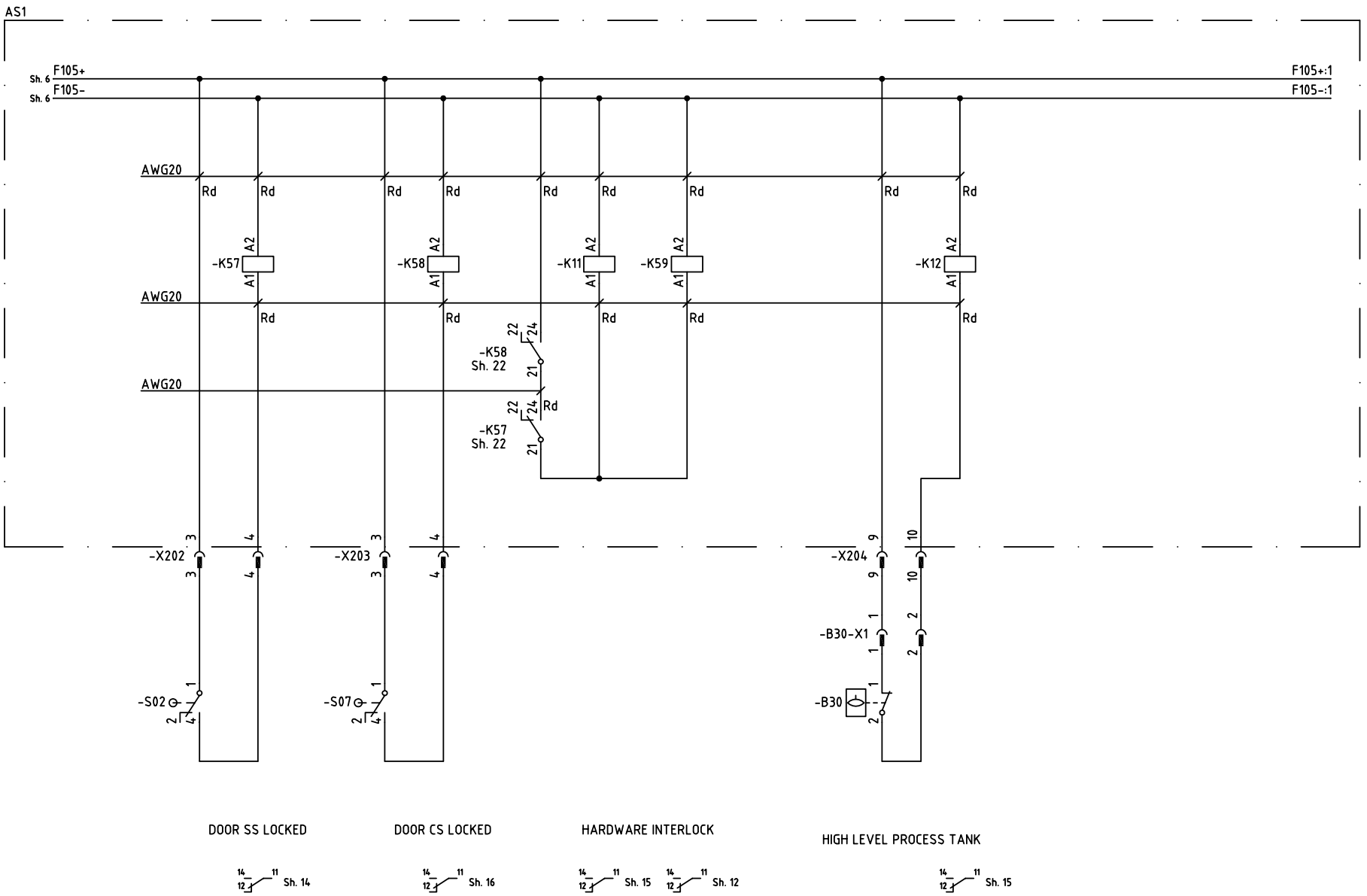

DOOR SS LOCKED

14 11 Sh. 14
24 21 Sh. 22

DOOR CS LOCKED

14 11 Sh. 16
24 21 Sh. 22

HARDWARE INTERLOCK

14 11 Sh. 15
14 11 Sh. 12

HIGH LEVEL PROCESS TANK

14 11 Sh. 15

DRAWN BY	CHECKED BY (GETINGE)	APPROVAL (GETINGE)	DATE (APP.)	PROJECT NUMBER
MHn	JSn	JSn	2006-01-02	

GETINGE
GETINGE DISINFECTION
P.O. BOX 1505
SE 352 15 VAXJO
SWEDEN

UTENSIL WASHER TYPE 88-5 ST
CIRCUIT DIAGRAM
HARDWARE INTERLOCKS

DRAWING NUMBER	SHEET
5027558	22
DATE / REV.	NEXT SHEET
2005-05-16 / A	23

REV:	NOTE:	SIGN.	DATE:
A	PU06-0122	HS	070816

Downloaded from www.Manualslib.com manuals search engine

THIS DRAWING CONTAINS CONFIDENTIAL INFORMATION AND REMAINS THE PROPERTY OF GETINGE DISINFECTION AB WITHOUT WHOSE PERMISSION IT MAY NOT BE COPIED, SHOWN OR HANDED TO A THIRD PART OR USED AT THE BASIS OF ALTERNATE DESIGNS

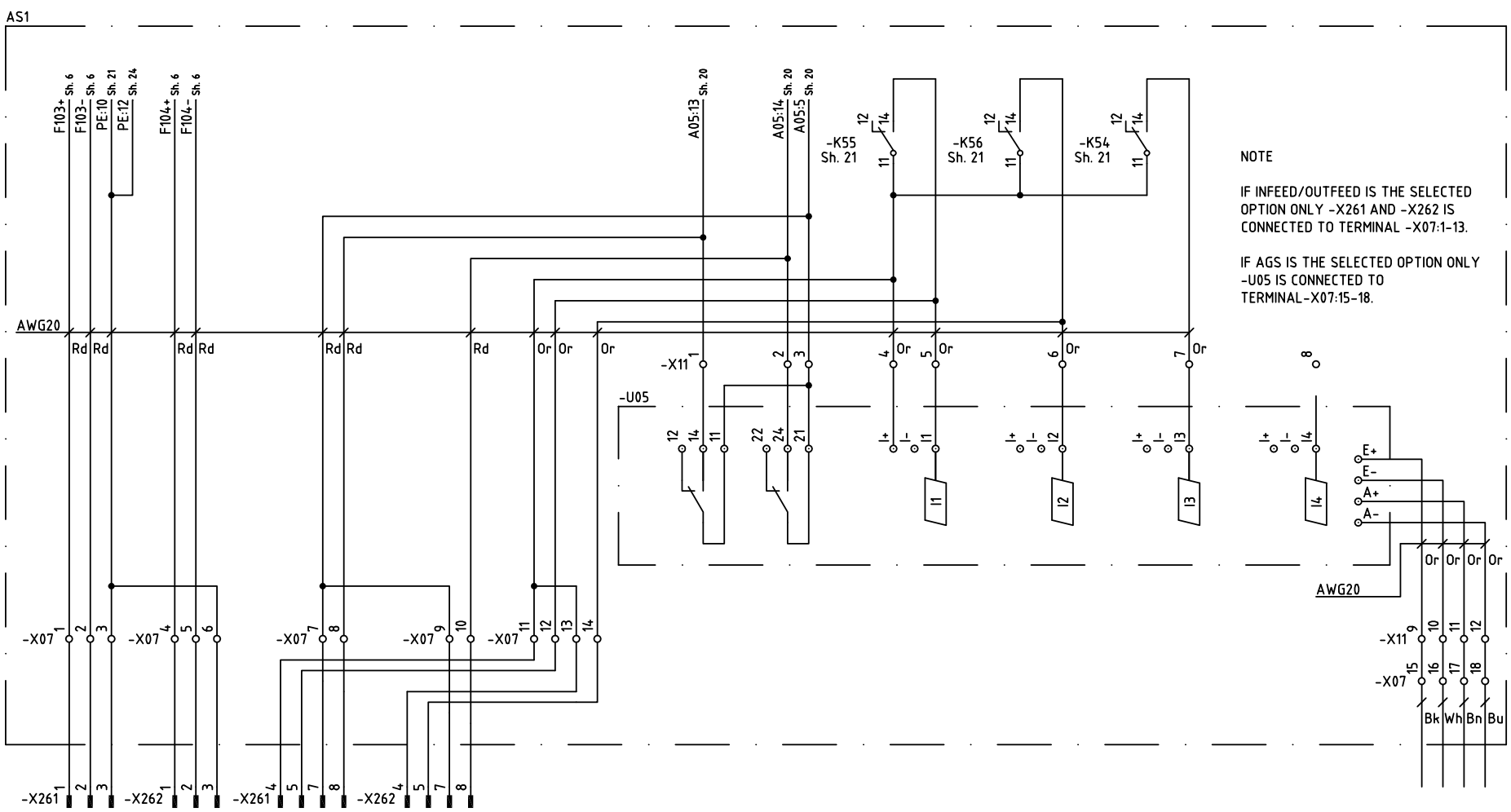

DRAWN BY	CHECKED BY (GETINGE)	APPROVAL (GETINGE)	DATE (APP.)	PROJECT NUMBER
MHn	JSn	JSn	2006-01-02	

GETINGE
GETINGE DISINFECTION
P.O. BOX 1505
SE 352 15 VAXJO
SWEDEN

UTENSIL WASHER TYPE 88-5 ST
CIRCUIT DIAGRAM
AGS SIGNALS

DRAWING NUMBER	SHEET
5027558	23
DATE / REV.	NEXT SHEET
2005-05-16 / A	24

REV:	NOTE:	SIGN.	DATE:
A	PU06-0122	HS	070816

Downloaded from www.Manualslib.com manuals search engine

THIS DRAWING CONTAINS CONFIDENTIAL INFORMATION AND REMAINS THE PROPERTY OF GETINGE DISINFECTION AB WITHOUT WHOSE PERMISSION IT MAY NOT BE COPIED, SHOWN OR HANDED TO A THIRD PART OR USED AT THE BASIS OF ALTERNATE DESIGNS

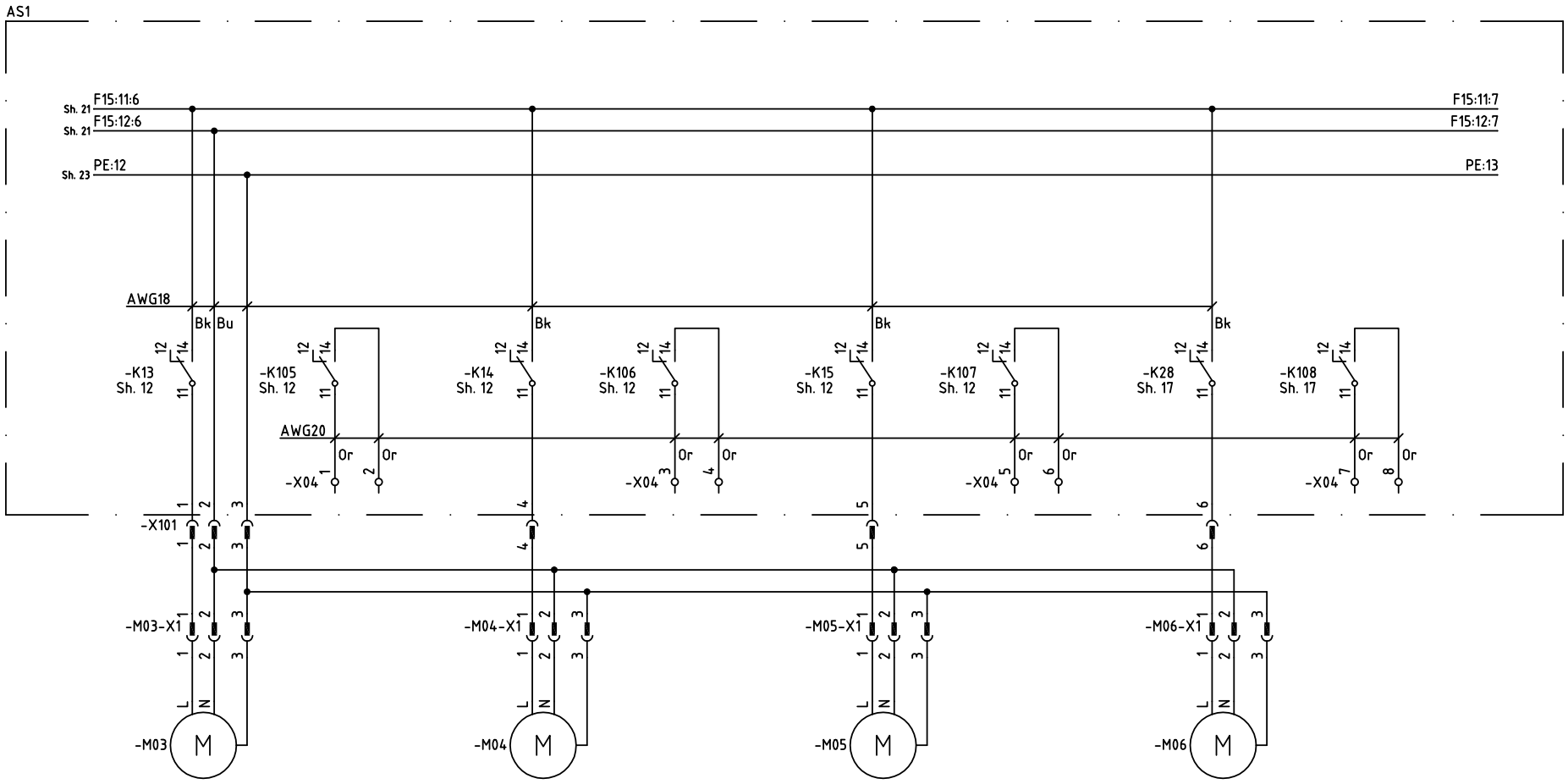

DRAWN BY	CHECKED BY (GETINGE)	APPROVAL (GETINGE)	DATE (APP.)	PROJECT NUMBER
MHn	JSn	JSn	2006-01-02	

GETINGE
GETINGE DISINFECTION
P.O. BOX 1505
SE 352 15 VÄXJÖ
SWEDEN

UTENSIL WASHER TYPE 88-5 ST
CIRCUIT DIAGRAM
DOSING PUMPS

DRAWING NUMBER	SHEET
5027558	24
DATE / REV.	NEXT SHEET
2005-05-16 / A	51

REV:	NOTE:	SIGN.	DATE:
A	PU06-0122	HS	070816

Downloaded from www.Manualslib.com manuals search engine

THIS DRAWING CONTAINS CONFIDENTIAL INFORMATION AND REMAINS THE PROPERTY OF GETINGE DISINFECTION AB WITHOUT WHOSE PERMISSION IT MAY NOT BE COPIED, SHOWN OR HANDED TO A THIRD PART OR USED AT THE BASIS OF ALTERNATE DESIGNS

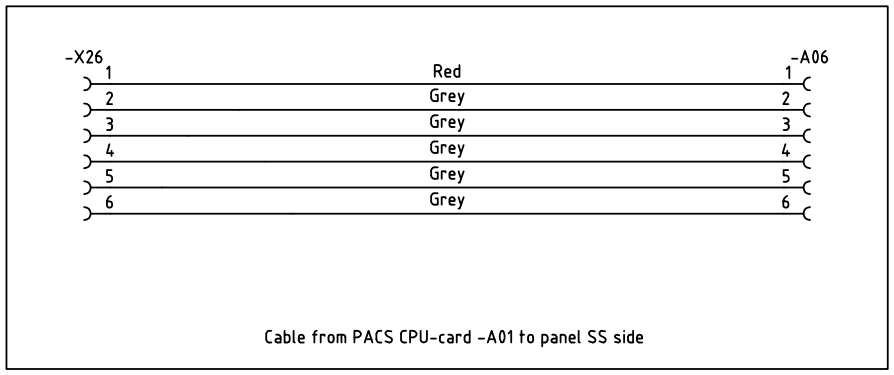

Cable from PACS CPU-card -A01 to panel SS side

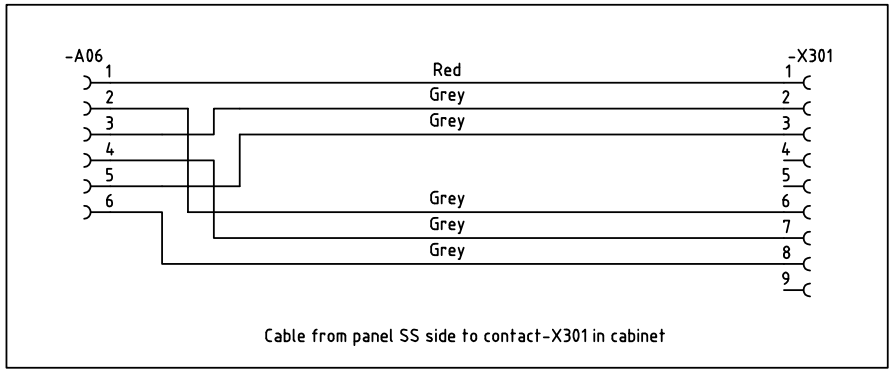

Cable from panel SS side to contact-X301 in cabinet

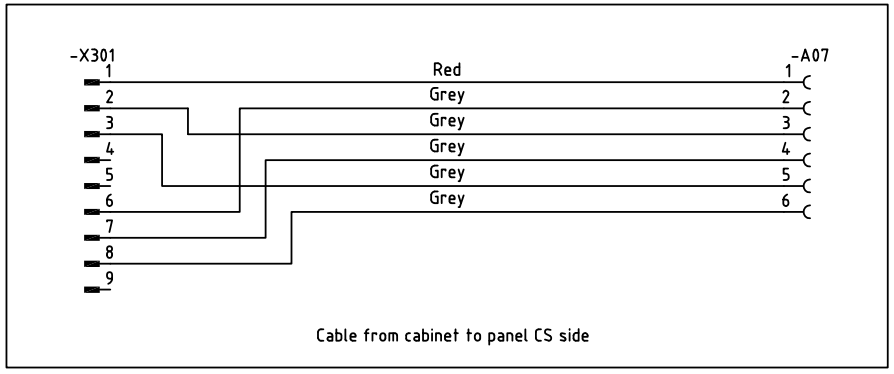

Cable from cabinet to panel CS side

DRAWN BY	CHECKED BY (GETINGE)	APPROVAL (GETINGE)	DATE (APP.)	PROJECT NUMBER
MHn	JSn	JSn	2006-01-02	

GETINGE
GETINGE DISINFECTION
P.O. BOX 1505
SE 352 15 VÄXJÖ
SWEDEN

UTENSIL WASHER TYPE 88-5 ST
CIRCUIT DIAGRAM
CABLES, PANEL CS AND SS

DRAWING NUMBER		SHEET
5027558		51
DATE	REV.	NEXT SHEET
2005-05-16	A	52

A	PU06-0122	HS	070816
REV:	NOTE:	SIGN.	DATE:

Downloaded from www.Manualslib.com manuals search engine

THIS DRAWING CONTAINS CONFIDENTIAL INFORMATION AND REMAINS THE PROPERTY OF GETINGE DISINFECTION AB WITHOUT WHOSE PERMISSION IT MAY NOT BE COPIED, SHOWN OR HANDED TO A THIRD PART OR USED AT THE BASIS OF ALTERNATE DESIGNS

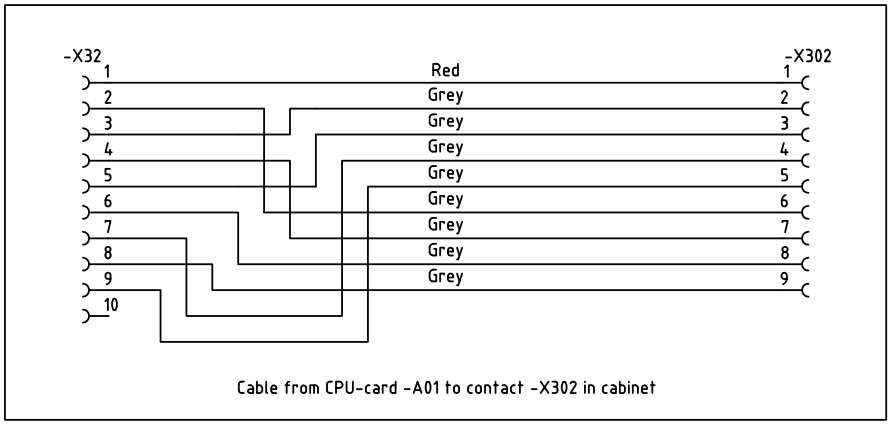

Cable from CPU-card -A01 to contact -X302 in cabinet

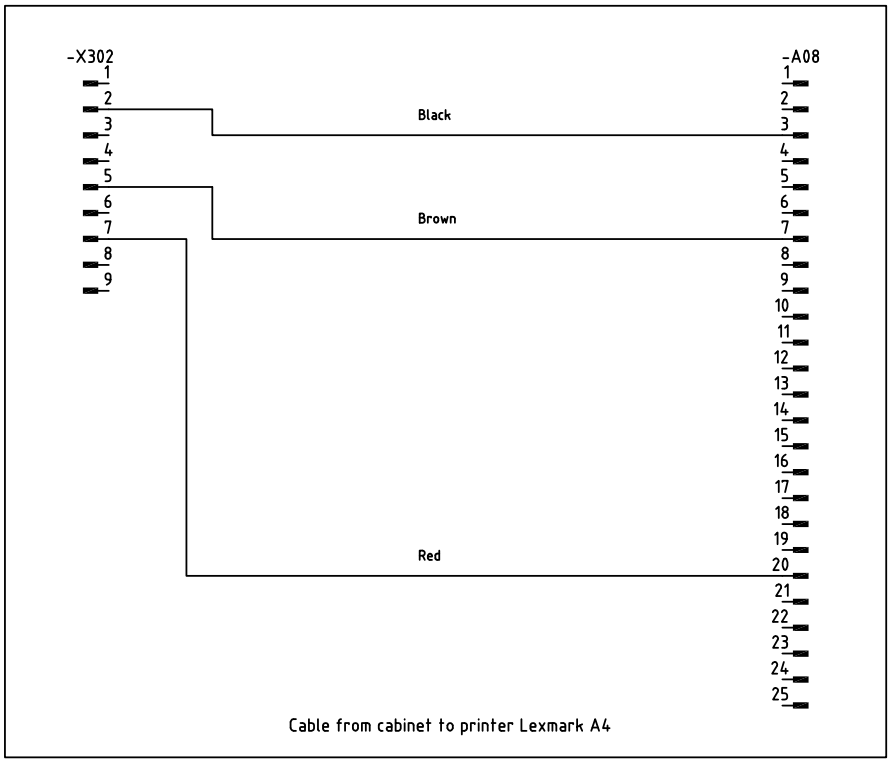

Cable from cabinet to printer Lexmark A4

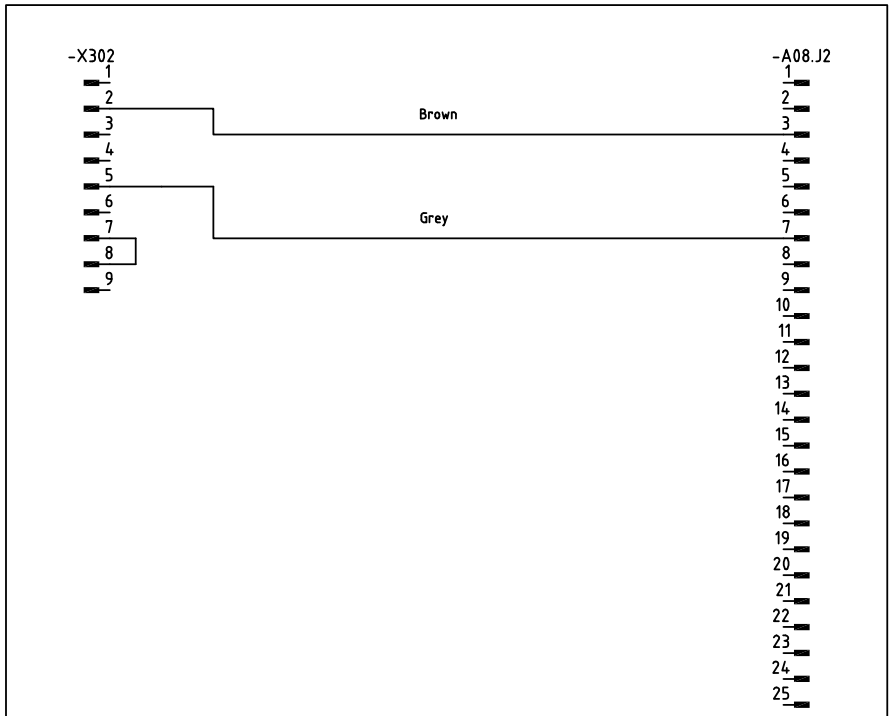

Cable from cabinet to printer CUSTOM

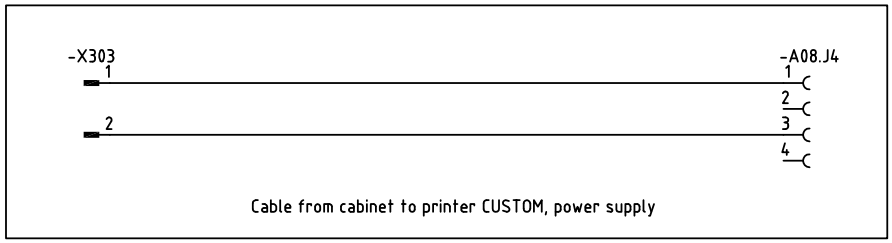

Cable from cabinet to printer CUSTOM, power supply

A	PU06-0122	HS	070816
REV:	NOTE:	SIGN.	DATE:

DRAWN BY	CHECKED BY (GETINGE)	APPROVAL (GETINGE)	DATE (APP.)
MHn	JSn	JSn	2006-01-02

PROJECT NUMBER

GETINGE
GETINGE DISINFECTION
P.O. BOX 1505
SE 352 15 VÄXJÖ
SWEDEN

UTENSIL WASHER TYPE 88-5 ST
CIRCUIT DIAGRAM
CABLES, PRINTER

DRAWING NUMBER		SHEET
5027558		52
DATE	REV.	NEXT SHEET
2005-05-16	A	53

Downloaded from www.Manualslib.com manuals search engine

THIS DRAWING CONTAINS CONFIDENTIAL INFORMATION AND REMAINS THE PROPERTY OF GETINGE DISINFECTION AB WITHOUT WHOSE PERMISSION IT MAY NOT BE COPIED, SHOWN OR HANDED TO A THIRD PART OR USED AT THE BASIS OF ALTERNATE DESIGNS

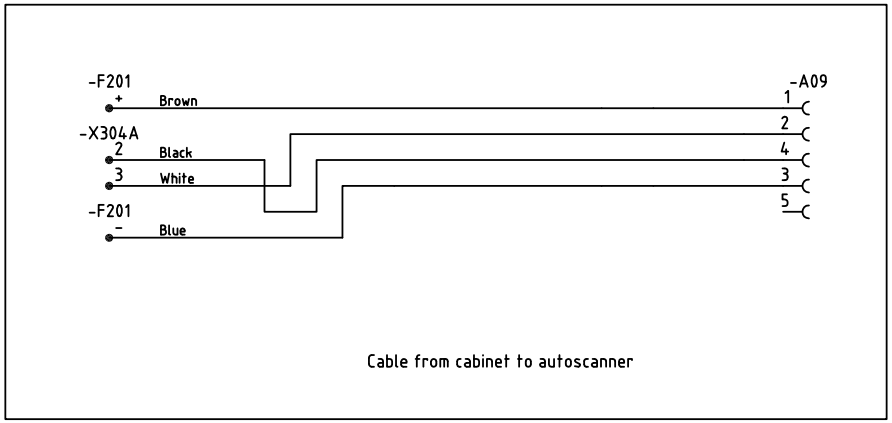

Cable from cabinet to autoscanner

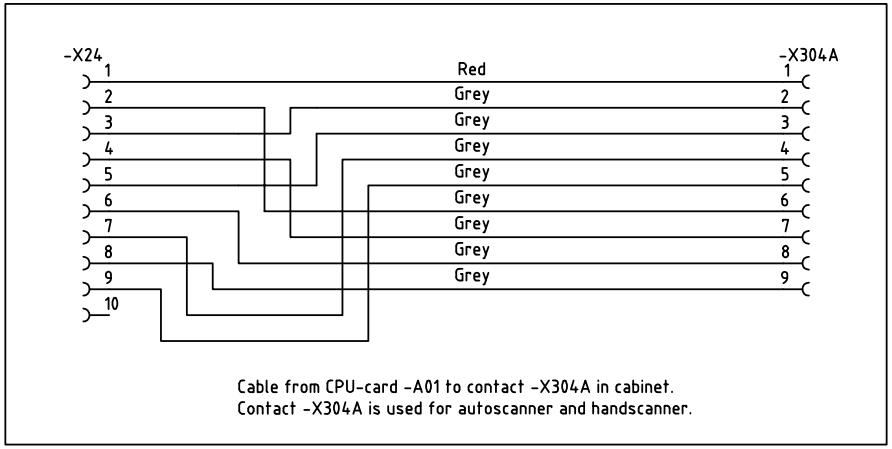

Cable from CPU-card -A01 to contact -X304A in cabinet.
Contact -X304A is used for autoscanner and handscanner.

A	PU06-0122	HS	070816
REV:	NOTE:	SIGN.	DATE:

DRAWN BY	CHECKED BY (GETINGE)	APPROVAL (GETINGE)	DATE (APP.)	PROJECT NUMBER
MHn	JSn	JSn	2006-01-02	

GETINGE
GETINGE DISINFECTION
P.O. BOX 1505
SE 352 15 VÄXJÖ
SWEDEN

UTENSIL WASHER TYPE 88-5 ST
CIRCUIT DIAGRAM
CABLES, AUTOSCANNER

DRAWING NUMBER		SHEET
5027558		53
DATE	REV.	NEXT SHEET
2005-05-16	A	54

Downloaded from www.Manualslib.com manuals search engine

THIS DRAWING CONTAINS CONFIDENTIAL INFORMATION AND REMAINS THE PROPERTY OF GETINGE DISINFECTION AB WITHOUT WHOSE PERMISSION IT MAY NOT BE COPIED, SHOWN OR HANDED TO A THIRD PART OR USED AT THE BASIS OF ALTERNATE DESIGNS

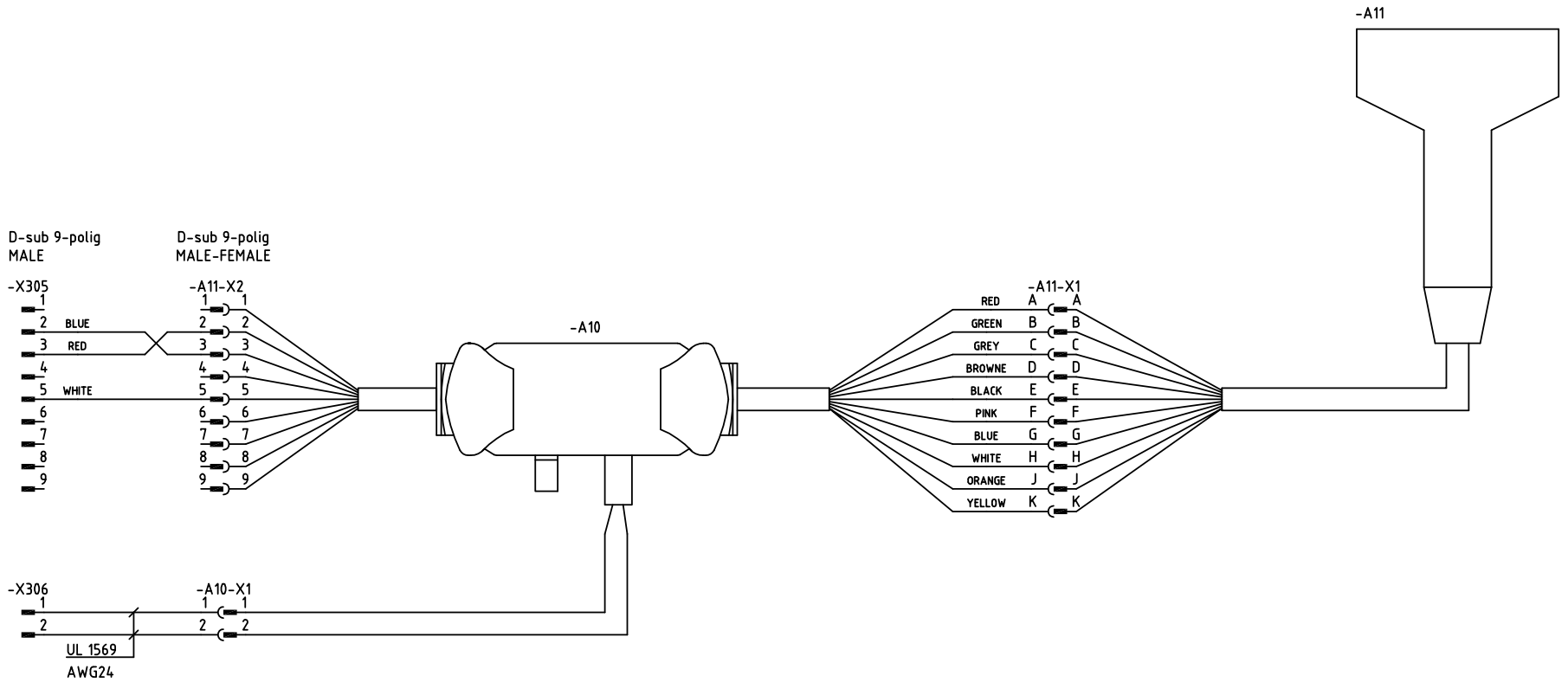

A	PU06-0122	HS	070816
REV:	NOTE:	SIGN.	DATE:

DRAWN BY	CHECKED BY (GETINGE)	APPROVAL (GETINGE)	DATE (APP.)	PROJECT NUMBER
MHn	JSn	JSn	2006-01-02	

GETINGE
GETINGE DISINFECTION
P.O. BOX 1505
SE 352 15 VAXJO
SWEDEN

UTENSIL WASHER TYPE 88-5 ST
CIRCUIT DIAGRAM
CABLE, HANDSCANNER

DRAWING NUMBER		SHEET
5027558		54
DATE	REV.	NEXT SHEET
2005-05-16	A	101

Downloaded from www.Manualslib.com manuals search engine

THIS DRAWING CONTAINS CONFIDENTIAL INFORMATION AND REMAINS THE PROPERTY OF GETINGE DISINFECTION AB WITHOUT WHOSE PERMISSION IT MAY NOT BE COPIED, SHOWN OR HANDED TO A THIRD PART OR USED AT THE BASIS OF ALTERNATE DESIGNS

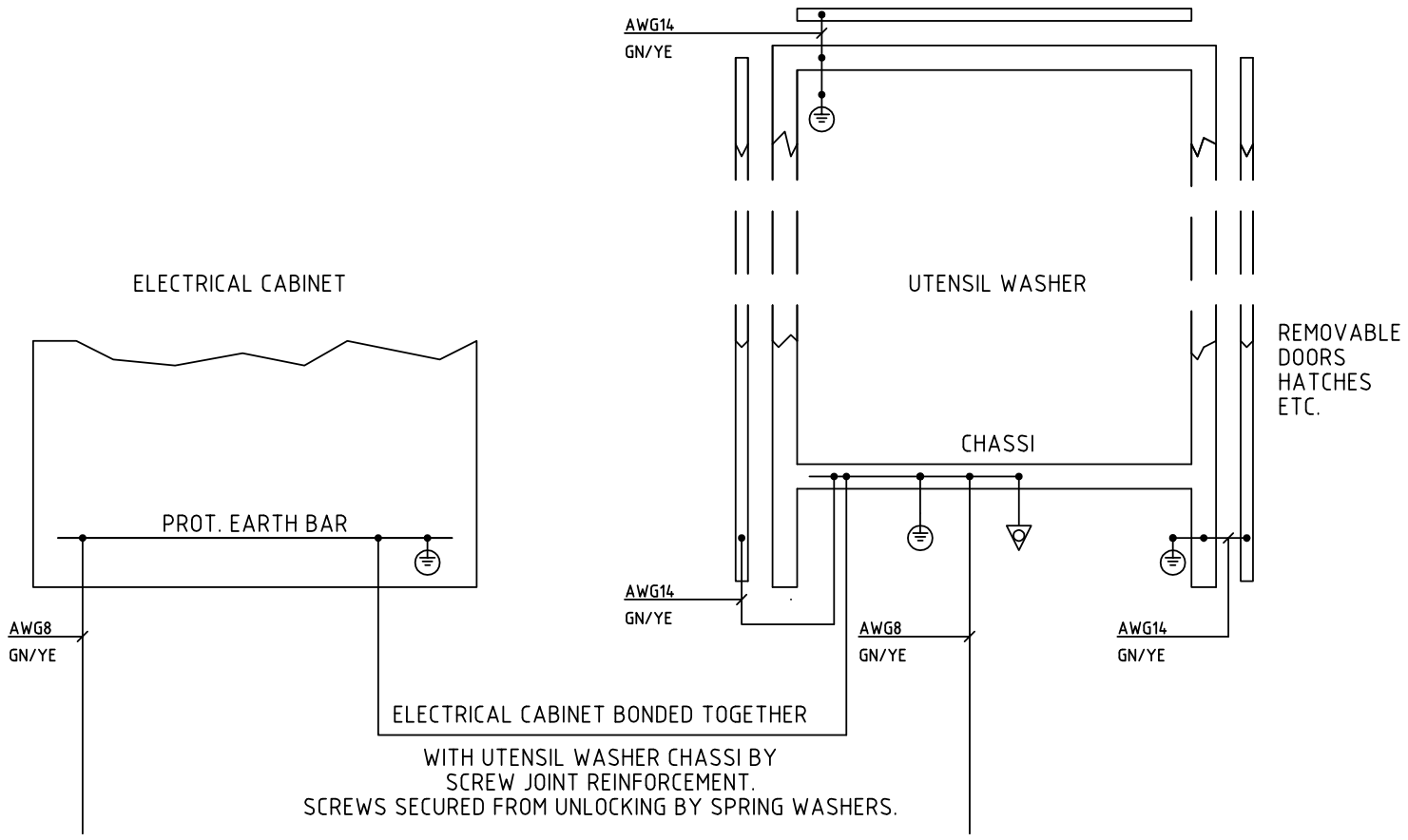

ALL CONNECTIONS TO
PROTECTIVE EARTH SYSTEM
SHALL BE MARKED WITH
FOLLOWING SYMBOL

DRAWN BY	CHECKED BY (GETINGE)	APPROVAL (GETINGE)	DATE (APP.)
MHn	JSn	JSn	2006-01-02

PROJECT NUMBER

GETINGE
GETINGE DISINFECTION
P.O. BOX 1505
SE 352 15 VÄXJÖ
SWEDEN

UTENSIL WASHER TYPE 88-5 ST
CIRCUIT DIAGRAM
PROTECTIVE BONDING CIRCUIT

DRAWING NUMBER		SHEET
5027558		101
DATE	REV.	NEXT SHEET
2005-05-16	A	-

REV:	NOTE:	SIGN.	DATE:
A	PU06-0122	HS	070816

Downloaded from www.Manualslib.com manuals search engine

THIS DRAWING CONTAINS CONFIDENTIAL INFORMATION AND REMAINS THE PROPERTY OF GETINGE DISINFECTION AB WITHOUT WHOSE PERMISSION IT MAY NOT BE COPIED, SHOWN OR HANDED TO A THIRD PART OR USED AT THE BASIS OF ALTERNATE DESIGNS

CONTENTS OF DRAWINGS

SHEET	DESCRIPTION	REVISION	NOTE	SHEET	DESCRIPTION	REVISION	NOTE
2	ELECTRICAL CABINET LEFT SIDE	A	200-208V, 50-60Hz, 3+PE	54	CABLE, HANDSCANNER	A	
3	POWER SUPPLY, MAIN CIRCUITS	A		101	PROTECTIVE BONDING CIRCUIT	A	
4	MAIN CIRCUITS	A					
5	CONTROL VOLTAGE, 230VAC	A					
6	CONTROL VOLTAGE, 24VDC	A					
7	CONTROL VOLTAGE, 5VDC	A					
8	CONTROL SYSTEM, PACS300	A					
9	MAIN BOARD, AI00-AI07	A					
10	MAIN BOARD, DI00-DI07	A					
11	MAIN BOARD, DI08-DI15	A					
12	MAIN BOARD, DO00-DO08	A					
13	MAIN BOARD, DO09-DO17	A					
14	EXPANSION CARD #1, DI16-DI21	A					
15	EXPANSION CARD #1, DO18-DO25, AO01	A					
16	EXPANSION CARD #2, DI22-DI27	A					
17	EXPANSION CARD #2, DO26-DO33, AO02	A					
18	EXPANSION CARD #3, DI28-DI33	A					
19	EXPANSION CARD #3, DO34-DO41, AO03	A					
20	EXPANSION CARD #4, DI34-DI39	A					
21	EXPANSION CARD #4, DO42-DO49, AO04	A					
22	HARDWARE INTERLOCKS	A					
23	AGS SIGNALS	A					
24	DOSING PUMPS	A					
51	CABLES, PANEL CS AND SS	A					
52	CABLES, PRINTER	A					
53	CABLES, AUTOSCANNER	A					

DRAWN BY	CHECKED BY (GETINGE)	APPROVAL (GETINGE)	DATE (APP.)	PROJECT NUMBER
MHn	JSn	JSn	2006-01-02	

GETINGE
GETINGE DISINFECTION
P.O. BOX 1505
SE 352 15 VAXJO
SWEDEN

UTENSIL WASHER TYPE 88-5 ST
CIRCUIT DIAGRAM
CONTENTS OF DRAWINGS

DRAWING NUMBER	SHEET
5027559	1
DATE / REV.	NEXT SHEET
2005-05-16 / A	2

REV:	NOTE:	SIGN.	DATE:
A	PU06-0122	HS	070816

Downloaded from www.Manualslib.com manuals search engine

THIS DRAWING CONTAINS CONFIDENTIAL INFORMATION AND REMAINS THE PROPERTY OF GETINGE DISINFECTION AB WITHOUT WHOSE PERMISSION IT MAY NOT BE COPIED, SHOWN OR HANDED TO A THIRD PART OR USED AT THE BASIS OF ALTERNATE DESIGNS

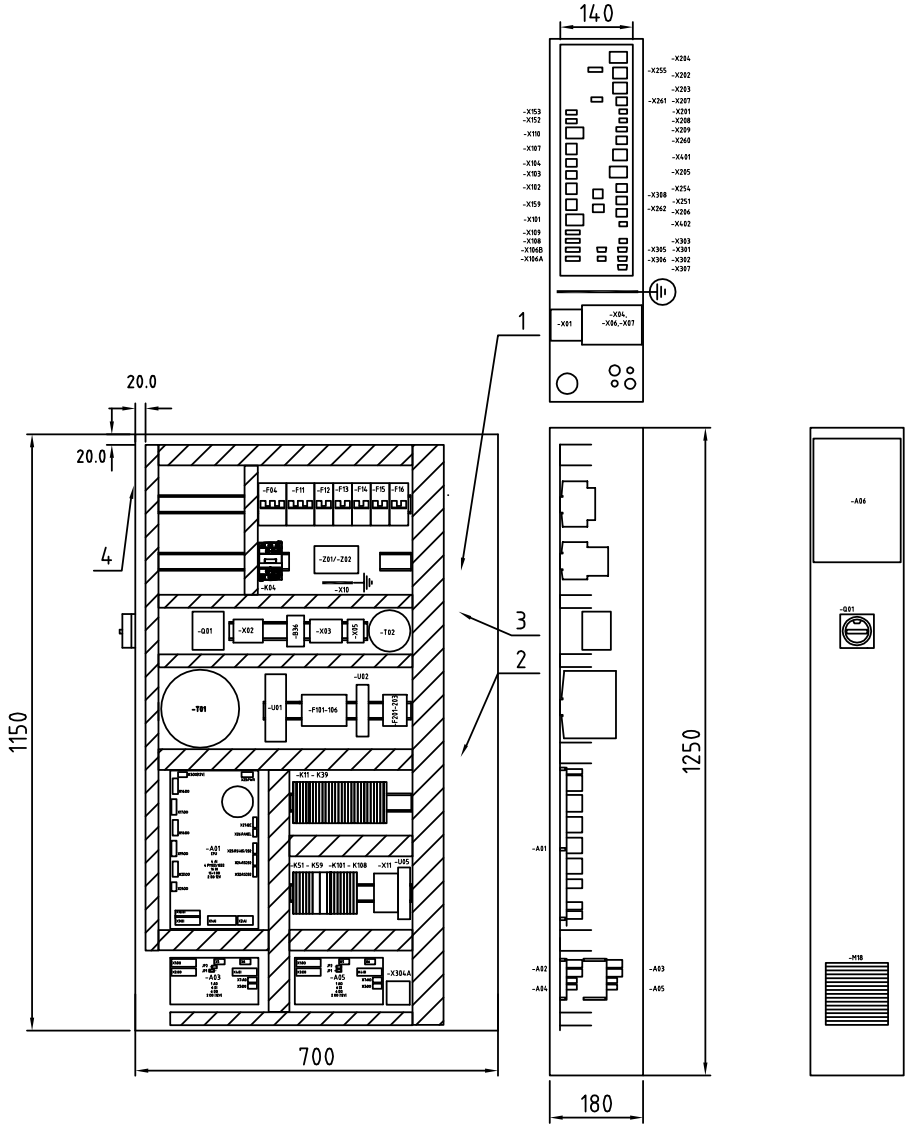

FOLLOWING COMPONENTS ARE OPTIONS:

-U02
-U05

WIRES USED IN MACHINE:

ACCORDING TO UL STYLE 1015, 600V 105C.
IF OTHER TYPE OF WIRE IS USED THIS IS SPECIFIED IN THE WIRING DIAGRAMS.

1) Connection point for power circuit.

2) Connection point for control voltage.

3) Label with fuse terminal description (5024156-00).

4) Label with manufacturers approval of electrical cabinet.

DRAWN BY	CHECKED BY (GETINGE)	APPROVAL (GETINGE)	DATE (APP.)	PROJECT NUMBER
MHn	JSn	JSn	2006-01-02	

GETINGE
GETINGE DISINFECTION
P.O. BOX 1505
SE 352 15 VAXJO
SWEDEN

UTENSIL WASHER TYPE 88-5 ST
ELECTRICAL CABINET LEFT SIDE
STEAM HEATED

DRAWING NUMBER	SHEET
5027559	2
DATE / REV.	NEXT SHEET
2005-05-16 / A	3

REV:	NOTE:	SIGN.	DATE:
A	PU06-0122	HS	070816

Downloaded from www.Manualslib.com manuals search engine

THIS DRAWING CONTAINS CONFIDENTIAL INFORMATION AND REMAINS THE PROPERTY OF GETINGE DISINFECTION AB WITHOUT WHOSE PERMISSION IT MAY NOT BE COPIED, SHOWN OR HANDED TO A THIRD PART OR USED AT THE BASIS OF ALTERNATE DESIGNS

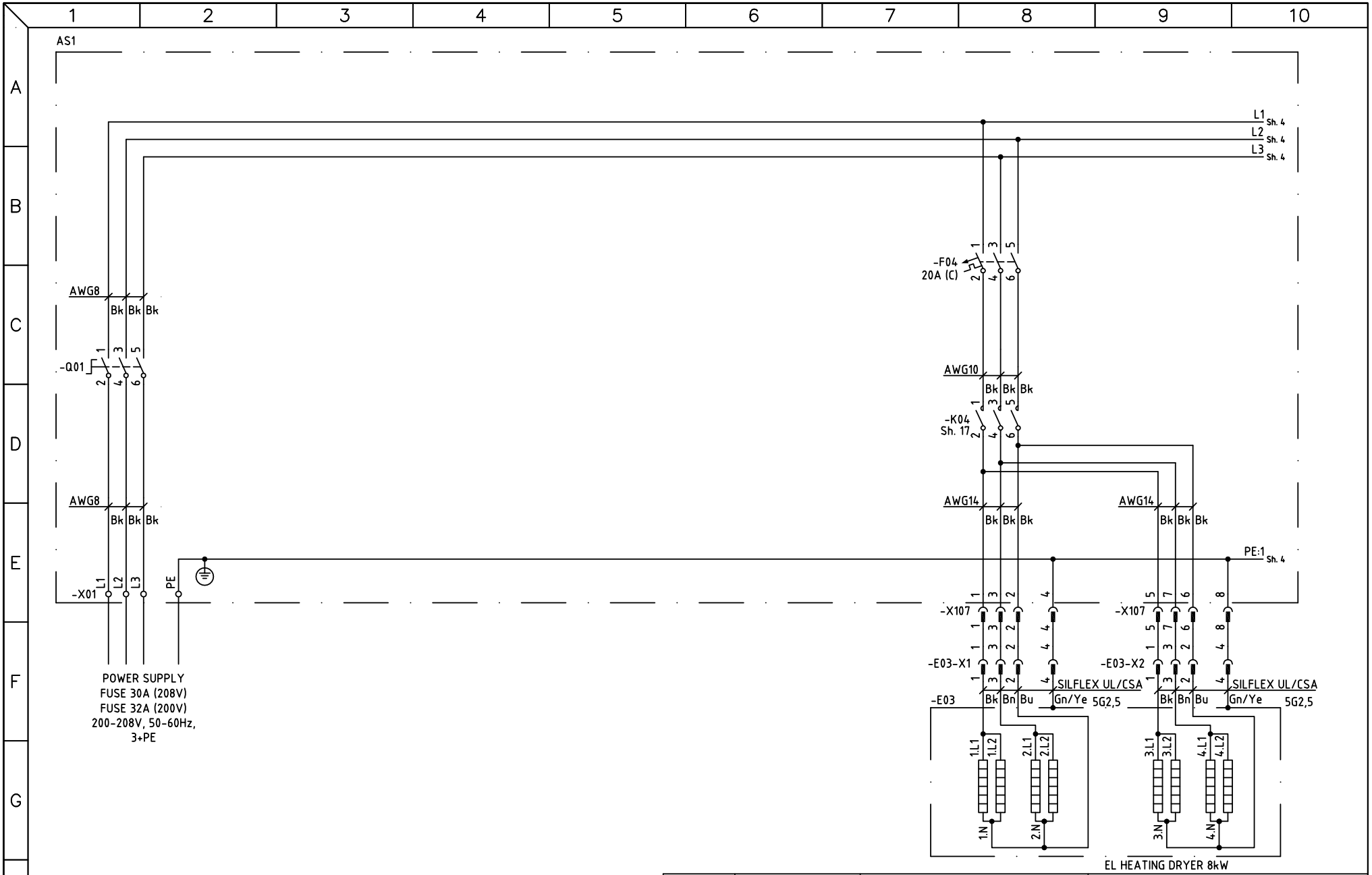

DRAWN BY	CHECKED BY (GETINGE)	APPROVAL (GETINGE)	DATE (APP.)	PROJECT NUMBER
MHn	JSn	JSn	2006-01-02	

GETINGE
GETINGE DISINFECTION
P.O. BOX 1505
SE 352 15 VAXJO
SWEDEN

UTENSIL WASHER TYPE 88-5 ST
CIRCUIT DIAGRAM
MAIN CIRCUIT

DRAWING NUMBER	SHEET
5027559	3
DATE / REV.	NEXT SHEET
2005-05-16 / A	4

REV:	NOTE:	SIGN.	DATE:
A	PU06-0122	HS	070816

Downloaded from www.Manualslib.com manuals search engine

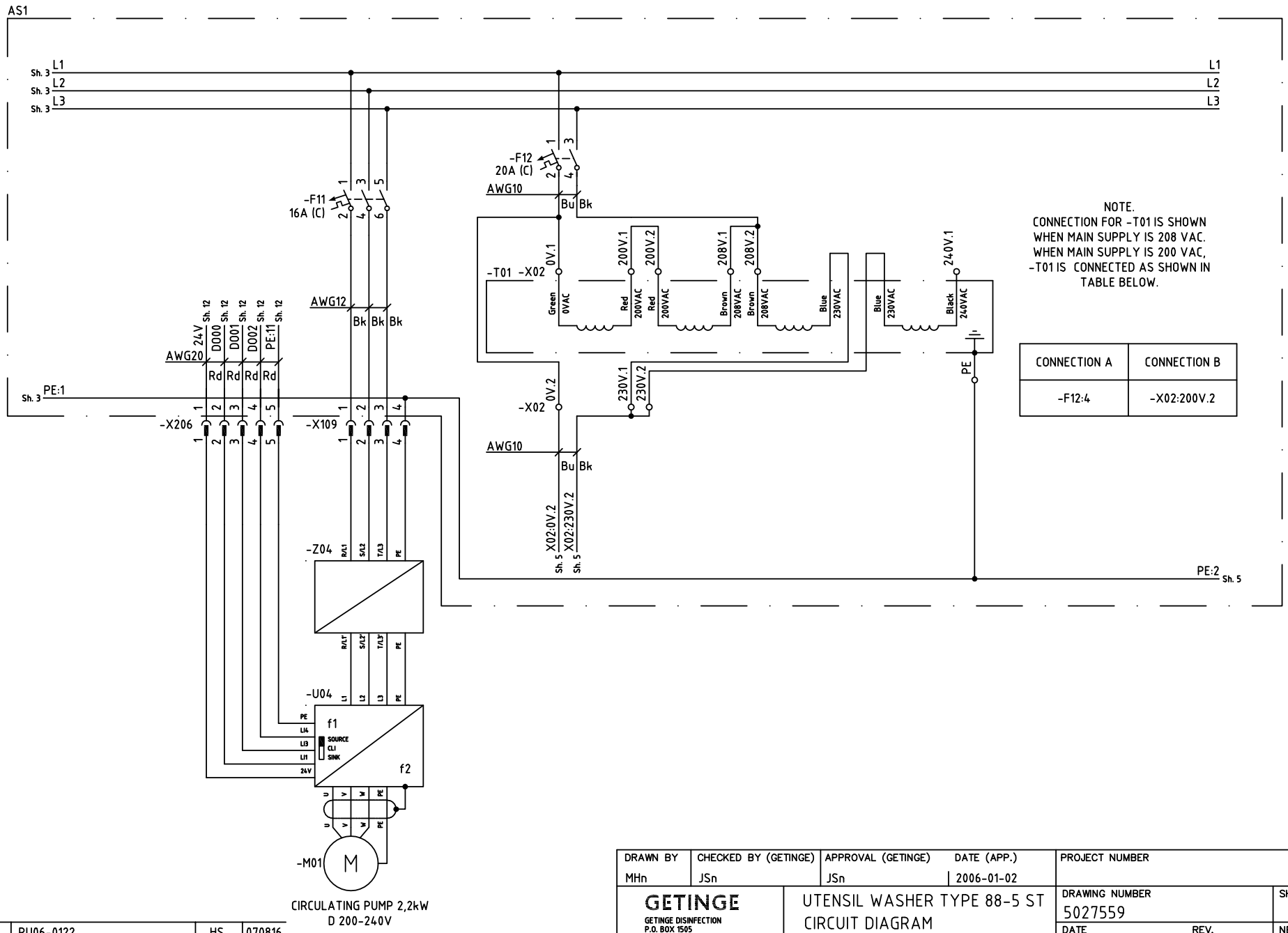

A	PU06-0122	HS	070816
REV:	NOTE:	SIGN.	DATE:

DRAWN BY	CHECKED BY (GETINGE)	APPROVAL (GETINGE)	DATE (APP.)	PROJECT NUMBER
MHn	JSn	JSn	2006-01-02	

GETINGE
GETINGE DISINFECTION
P.O. BOX 1505
SE 352 15 VAXJO
SWEDEN

UTENSIL WASHER TYPE 88-5 ST
CIRCUIT DIAGRAM
MAIN CIRCUIT

DRAWING NUMBER	SHEET
5027559	4
DATE / REV.	NEXT SHEET
2005-05-16 / A	5

Downloaded from www.Manualslib.com manuals search engine

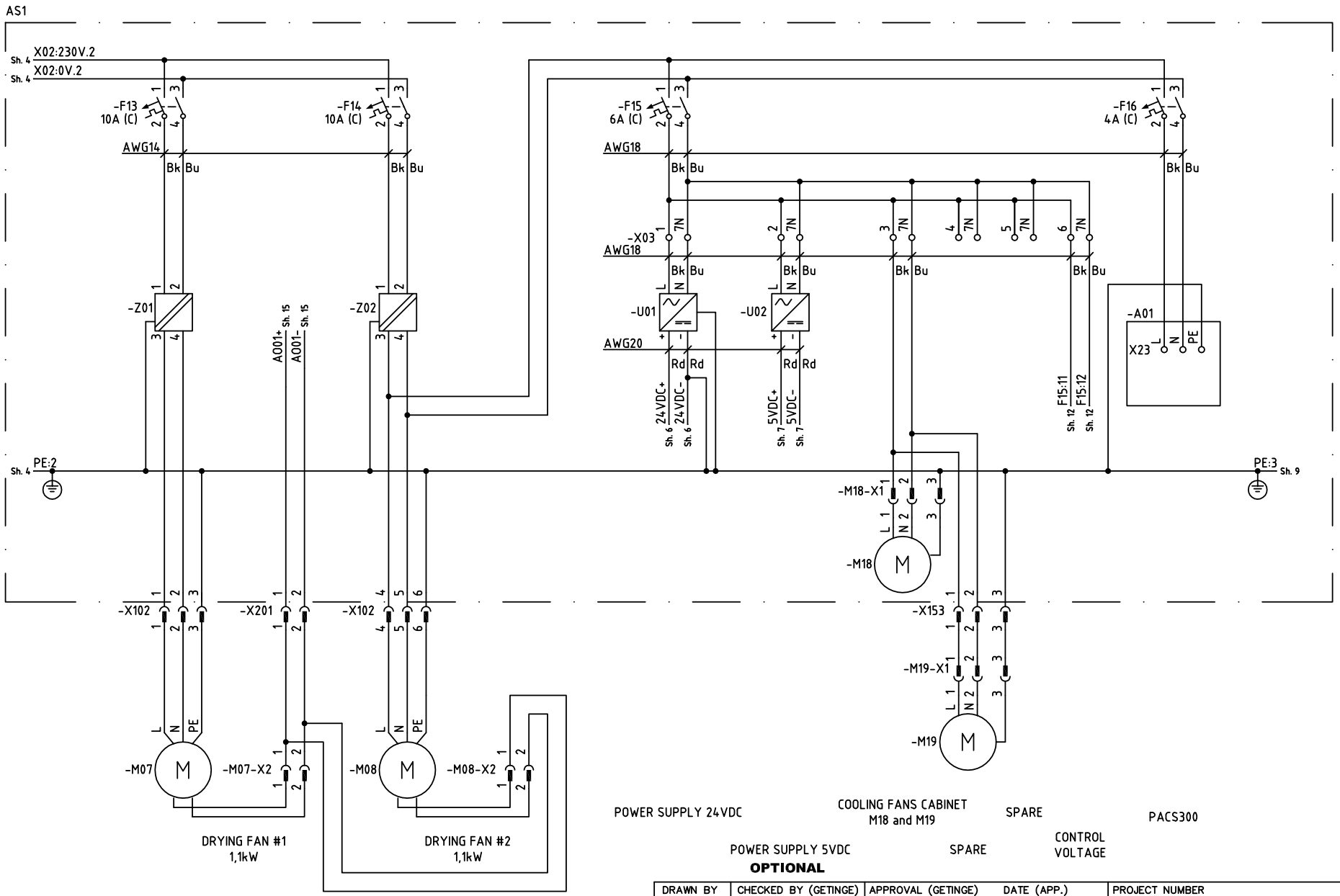

DRAWN BY	CHECKED BY (GETINGE)	APPROVAL (GETINGE)	DATE (APP.)	PROJECT NUMBER
MHn	JSn	JSn	2006-01-02	

GETINGE
GETINGE DISINFECTION
P.O. BOX 1505
SE 352 15 VAXJO
SWEDEN

UTENSIL WASHER TYPE 88-5 ST
CIRCUIT DIAGRAM
230VAC

DRAWING NUMBER	SHEET
5027559	5
DATE / REV.	NEXT SHEET
2005-05-16 / A	6

REV:	NOTE:	SIGN.	DATE:
A	PU06-0122	HS	070816

Downloaded from www.Manualslib.com manuals search engine

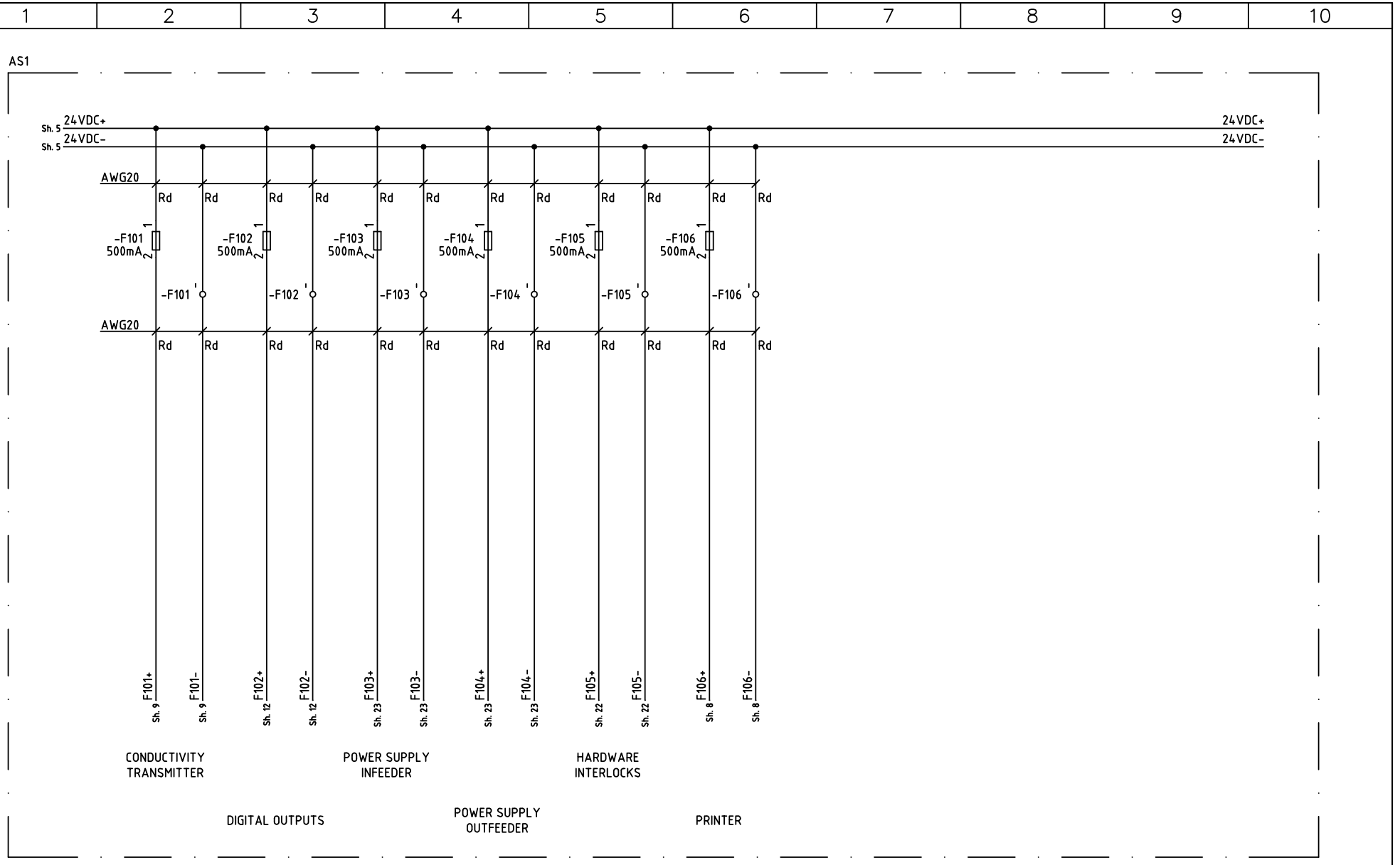

DRAWN BY	CHECKED BY (GETINGE)	APPROVAL (GETINGE)	DATE (APP.)	PROJECT NUMBER
MHn	JSn	JSn	2006-01-02	

GETINGE
GETINGE DISINFECTION
P.O. BOX 1505
SE 352 15 VAXJO
SWEDEN

UTENSIL WASHER TYPE 88-5 ST
CIRCUIT DIAGRAM
24VDC

DRAWING NUMBER	SHEET
5027559	6
DATE / REV.	NEXT SHEET
2005-05-16 / A	7

A	PU06-0122	HS	070816
REV:	NOTE:	SIGN.	DATE:

Downloaded from www.Manualslib.com manuals search engine

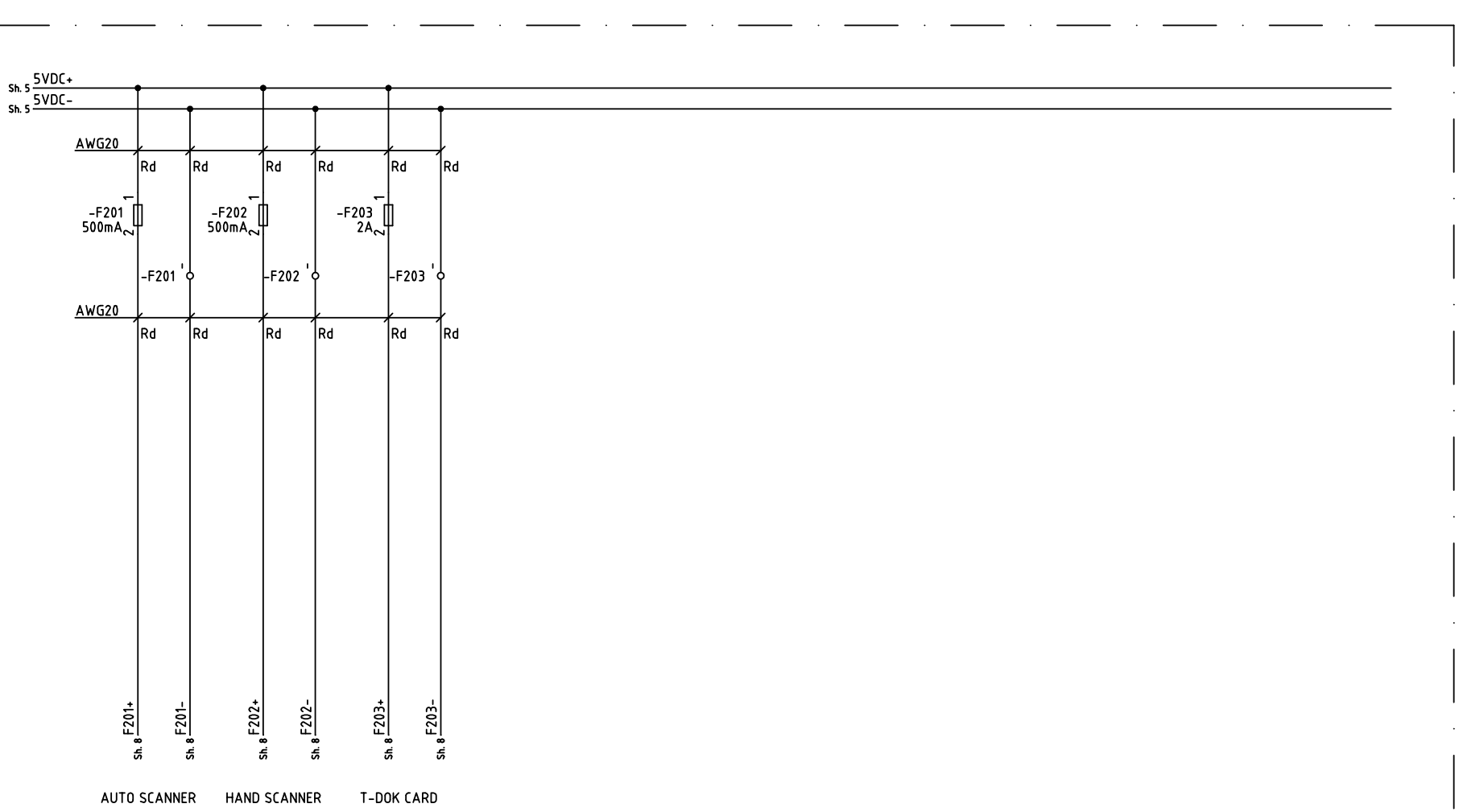

DRAWN BY	CHECKED BY (GETINGE)	APPROVAL (GETINGE)	DATE (APP.)	PROJECT NUMBER
MHn	JSn	JSn	2006-01-02	

GETINGE
GETINGE DISINFECTION
P.O. BOX 1505
SE 352 15 VAXJO
SWEDEN

UTENSIL WASHER TYPE 88-5 ST
CIRCUIT DIAGRAM
5VDC

DRAWING NUMBER	SHEET
5027559	7
DATE / REV.	NEXT SHEET
2005-05-16 / A	8

REV:	NOTE:	SIGN.	DATE:
A	PU06-0122	HS	070816

Downloaded from www.Manualslib.com manuals search engine

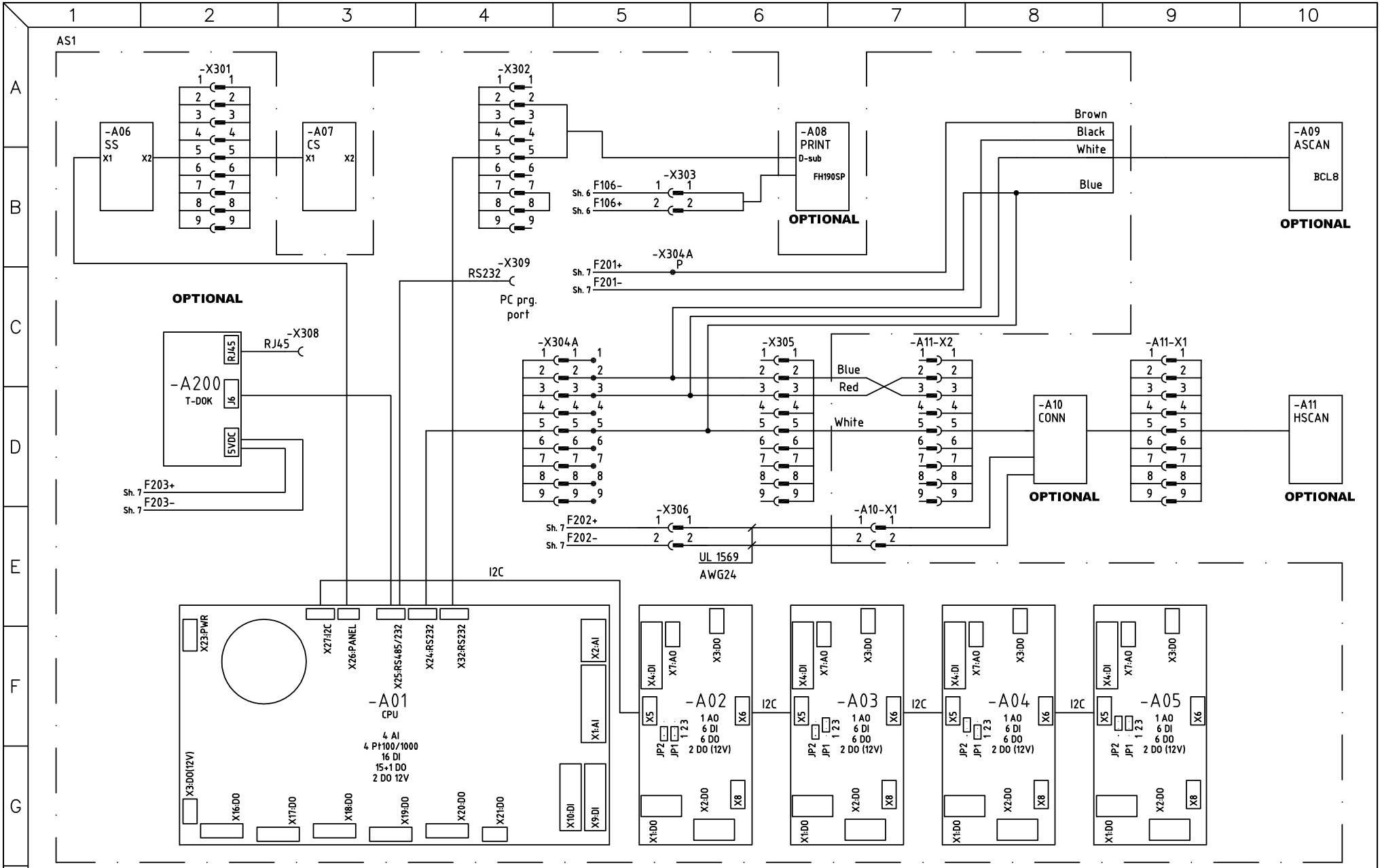

DRAWN BY	CHECKED BY (GETINGE)	APPROVAL (GETINGE)	DATE (APP.)	PROJECT NUMBER
MHn	JSn	JSn	2006-01-02	

GETINGE
GETINGE DISINFECTION
P.O. BOX 1505
SE 352 15 VAXJO
SWEDEN

UTENSIL WASHER TYPE 88-5 ST
CIRCUIT DIAGRAM
PACS300

DRAWING NUMBER	SHEET
5027559	8
DATE / REV.	NEXT SHEET
2005-05-16 / A	9

A	PU06-0122	HS	070816
REV:	NOTE:	SIGN.	DATE:

Downloaded from www.Manualslib.com manuals search engine

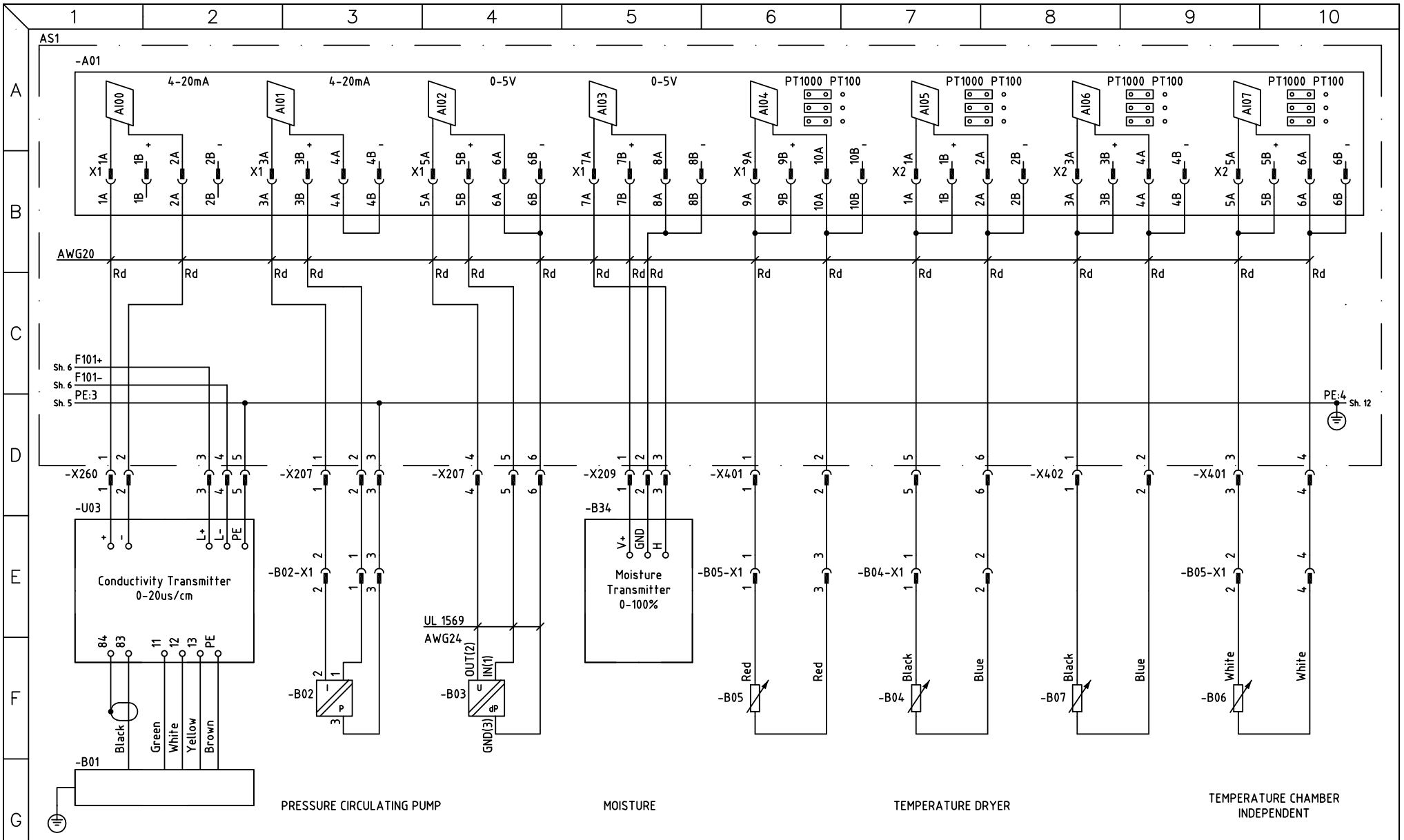

DRAWN BY	CHECKED BY (GETINGE)	APPROVAL (GETINGE)	DATE (APP.)	PROJECT NUMBER
MHn	JSn	JSn	2006-01-02	

GETINGE
GETINGE DISINFECTION
P.O. BOX 1505
SE 352 15 VAXJO
SWEDEN

UTENSIL WASHER TYPE 88-5 ST
CIRCUIT DIAGRAM
AI00-AI07

DRAWING NUMBER	SHEET
5027559	9
DATE / REV.	NEXT SHEET
2005-05-16 / A	10

REV:	NOTE:	SIGN.	DATE:
A	PU06-0122	HS	070816

Downloaded from www.Manualslib.com manuals search engine

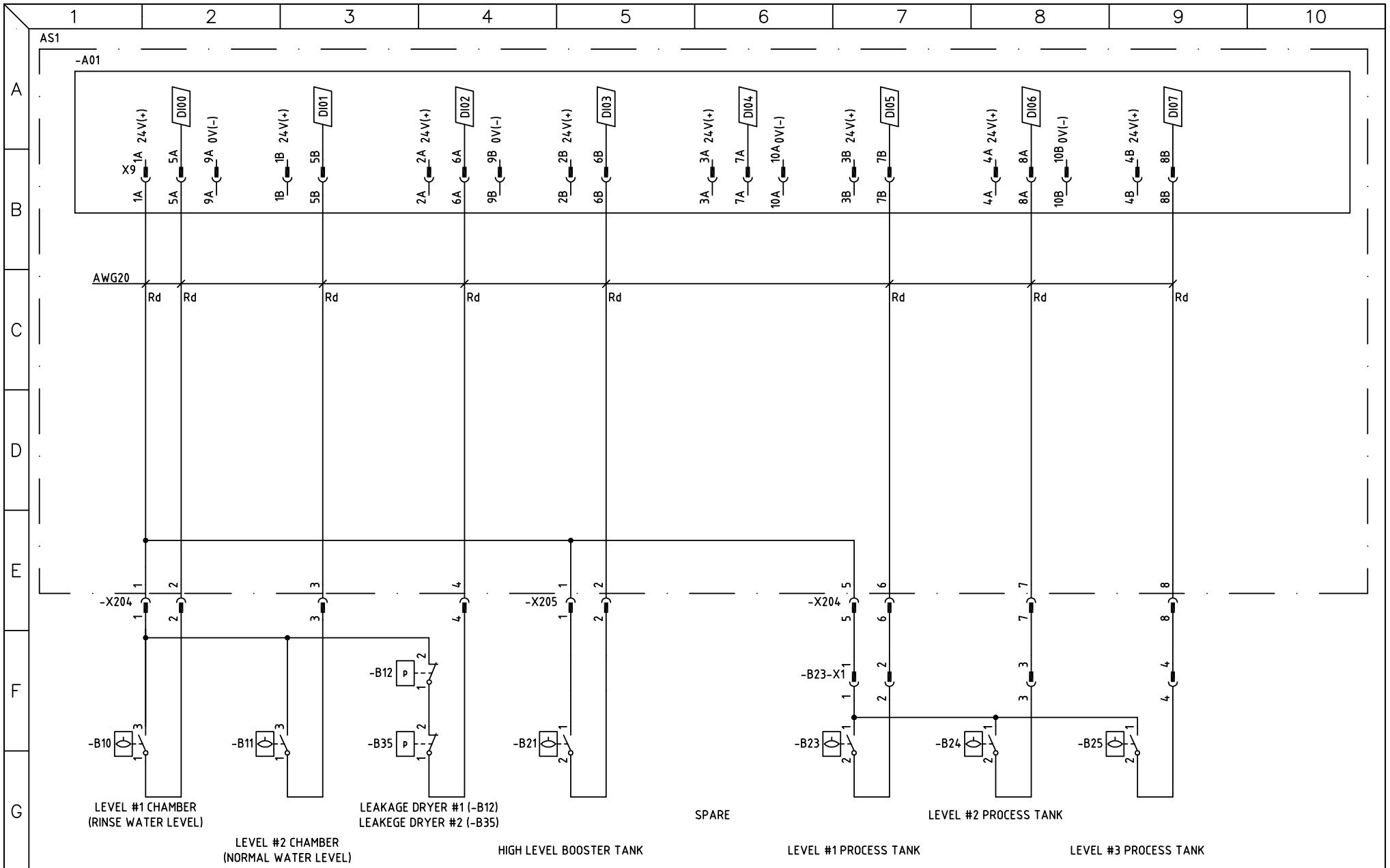

DRAWN BY	CHECKED BY (GETINGE)	APPROVAL (GETINGE)	DATE (APP.)	PROJECT NUMBER
MHn	JSn	JSn	2006-01-02	

GETINGE
GETINGE DISINFECTION
P.O. BOX 1505
SE 352 15 VAXJO
SWEDEN

UTENSIL WASHER TYPE 88-5 ST
CIRCUIT DIAGRAM
DI00-DI07

DRAWING NUMBER	SHEET
5027559	10
DATE / REV.	NEXT SHEET
2005-05-16 / A	11

REV:	NOTE:	SIGN.	DATE:
A	PU06-0122	HS	070816

Downloaded from www.Manualslib.com manuals search engine

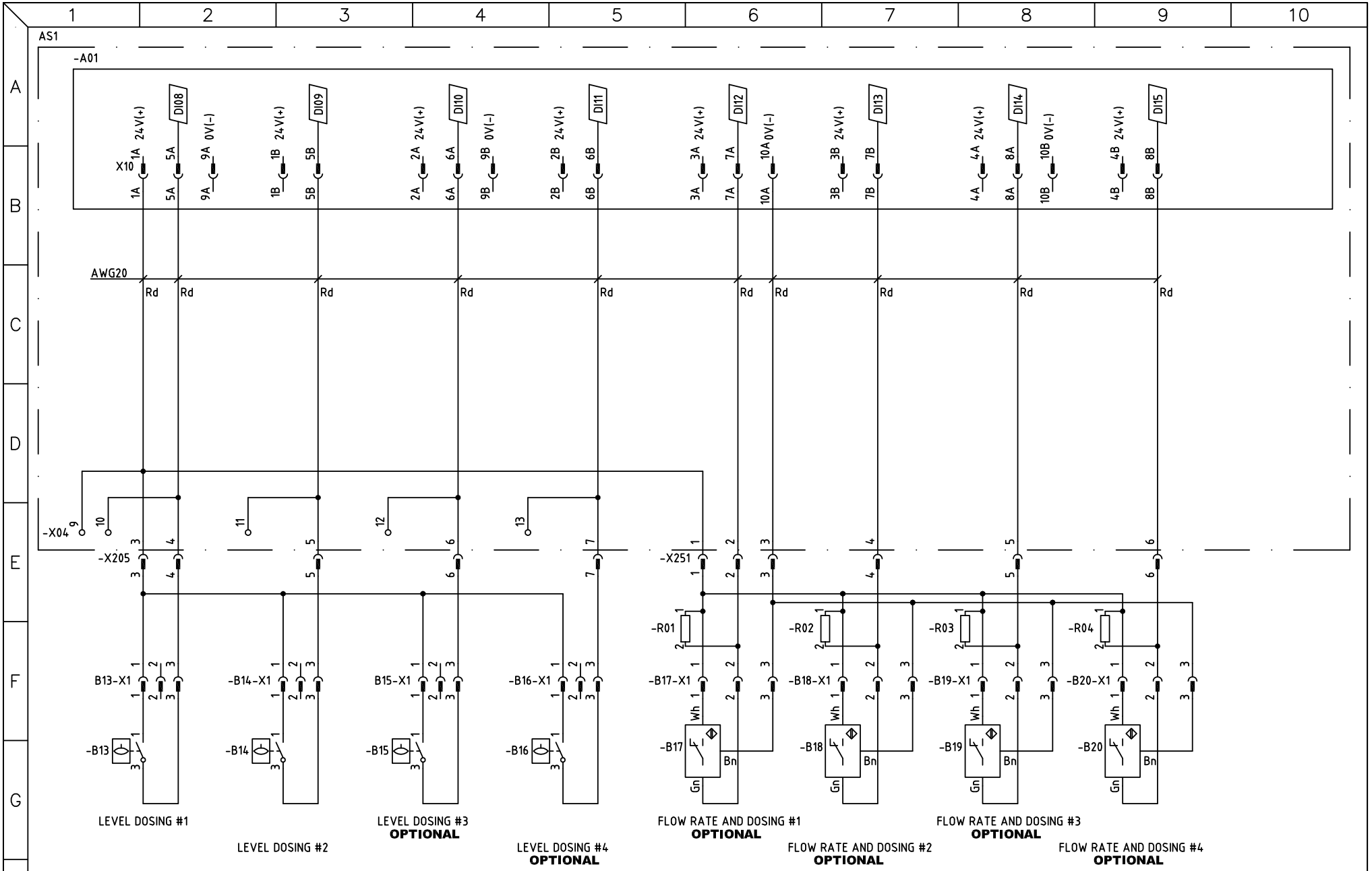

DRAWN BY	CHECKED BY (GETINGE)	APPROVAL (GETINGE)	DATE (APP.)	PROJECT NUMBER
MHn	JSn	JSn	2006-01-02	

GETINGE
GETINGE DISINFECTION
P.O. BOX 1505
SE 352 15 VAXJO
SWEDEN

UTENSIL WASHER TYPE 88-5 ST
CIRCUIT DIAGRAM
DI08-DI15

DRAWING NUMBER	SHEET
5027559	11
DATE / REV.	NEXT SHEET
2005-05-16 / A	12

A	PU06-0122	HS	070816
REV:	NOTE:	SIGN.	DATE:

Downloaded from www.Manualslib.com manuals search engine

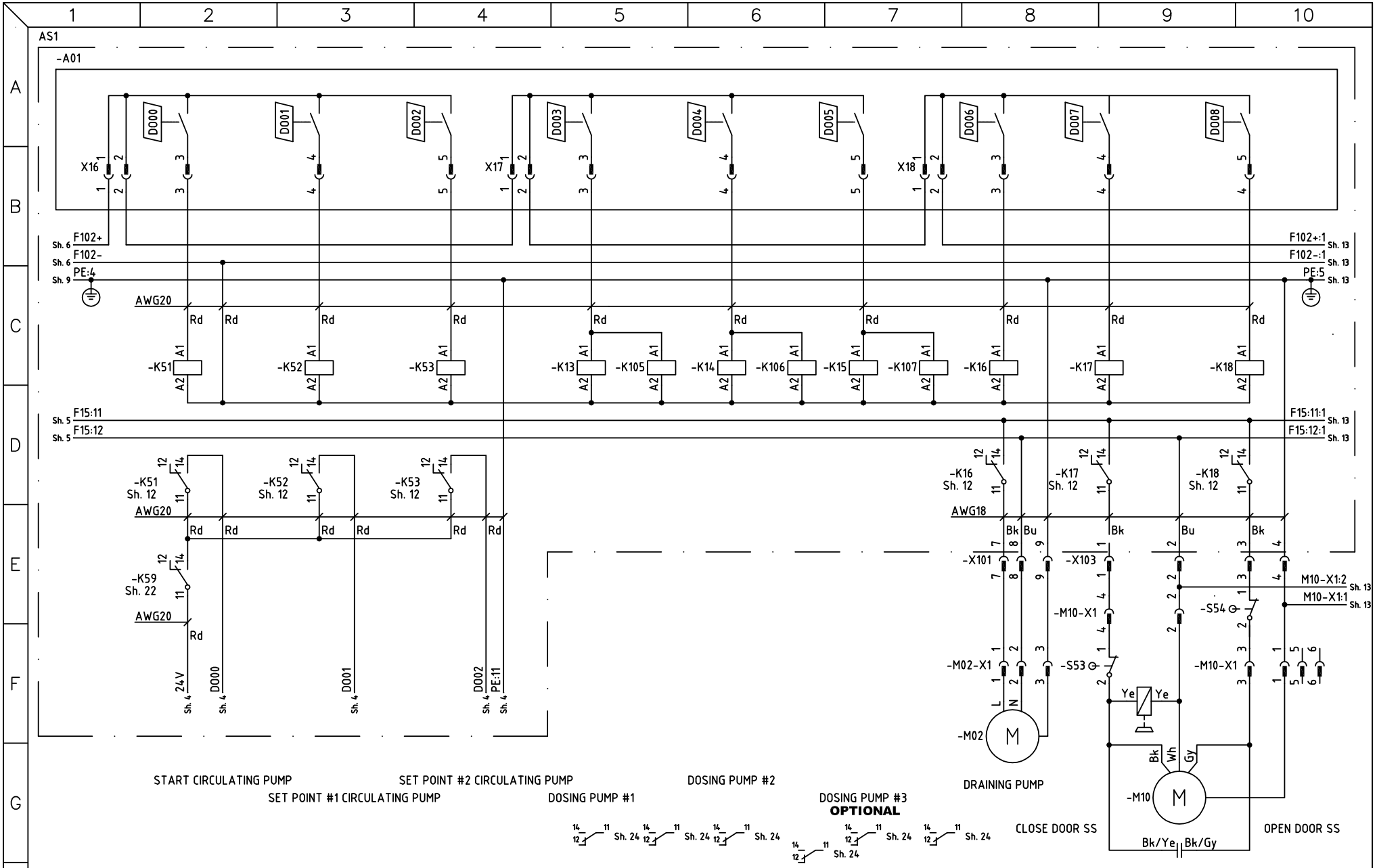

DRAWN BY	CHECKED BY (GETINGE)	APPROVAL (GETINGE)	DATE (APP.)	PROJECT NUMBER
MHn	JSn	JSn	2006-01-02	

GETINGE
GETINGE DISINFECTION
P.O. BOX 1505
SE 352 15 VAXJO
SWEDEN

UTENSIL WASHER TYPE 88-5 ST
CIRCUIT DIAGRAM
D000-D008

DRAWING NUMBER	SHEET
5027559	12
DATE / REV.	NEXT SHEET
2005-05-16 / A	13

A	PU06-0122	HS	070816
REV:	NOTE:	SIGN.	DATE:

Downloaded from www.Manualslib.com manuals search engine

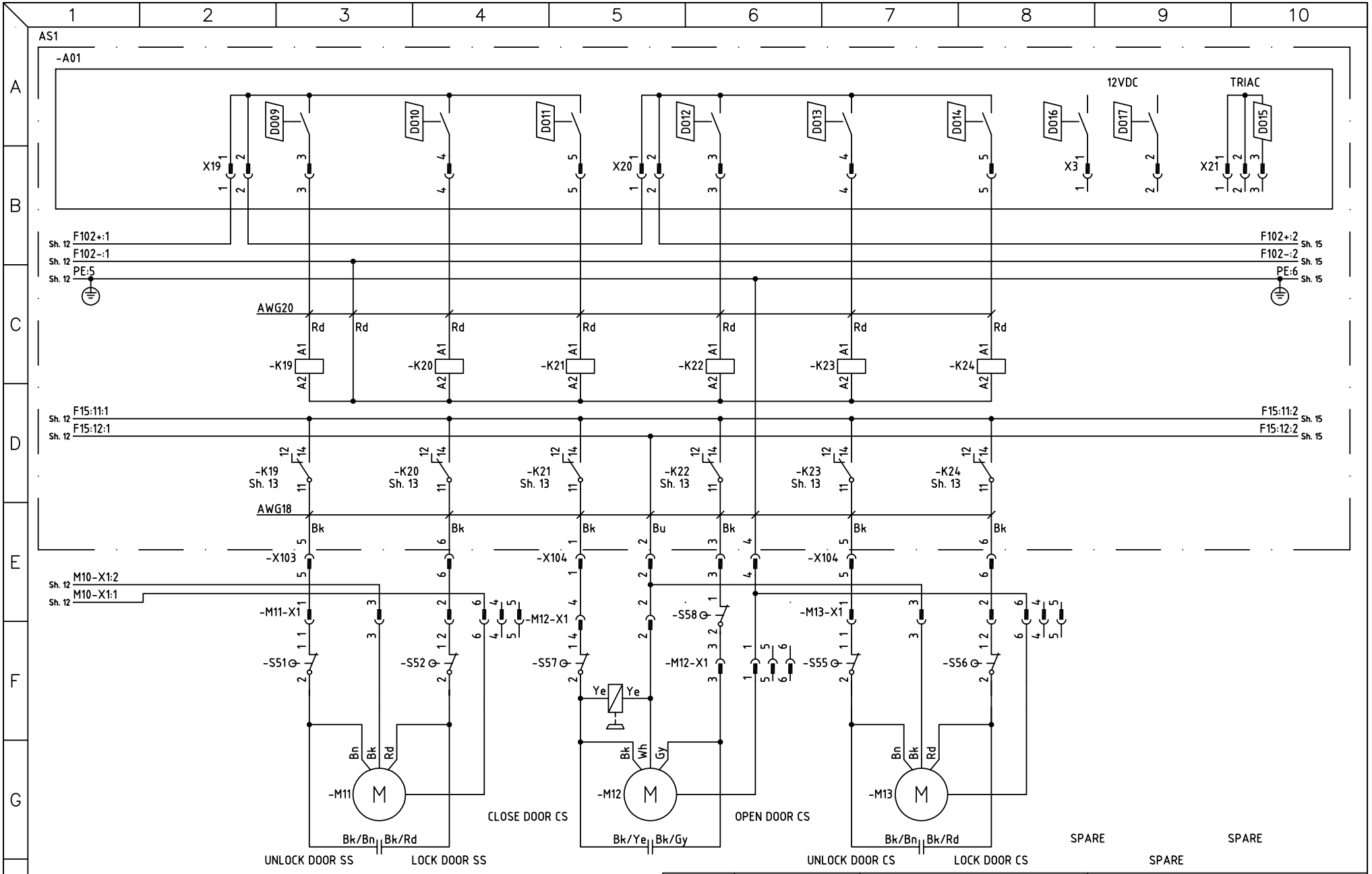

DRAWN BY	CHECKED BY (GETINGE)	APPROVAL (GETINGE)	DATE (APP.)	PROJECT NUMBER
MHn	JSn	JSn	2006-01-02	

GETINGE
GETINGE DISINFECTION
P.O. BOX 1505
SE 352 15 VAXJO
SWEDEN

UTENSIL WASHER TYPE 88-5 ST
CIRCUIT DIAGRAM
D009-D017

DRAWING NUMBER	SHEET
5027559	13
DATE / REV.	NEXT SHEET
2005-05-16 / A	14

A	PU06-0122	HS	070816
REV:	NOTE:	SIGN.	DATE:

Downloaded from www.Manualslib.com manuals search engine

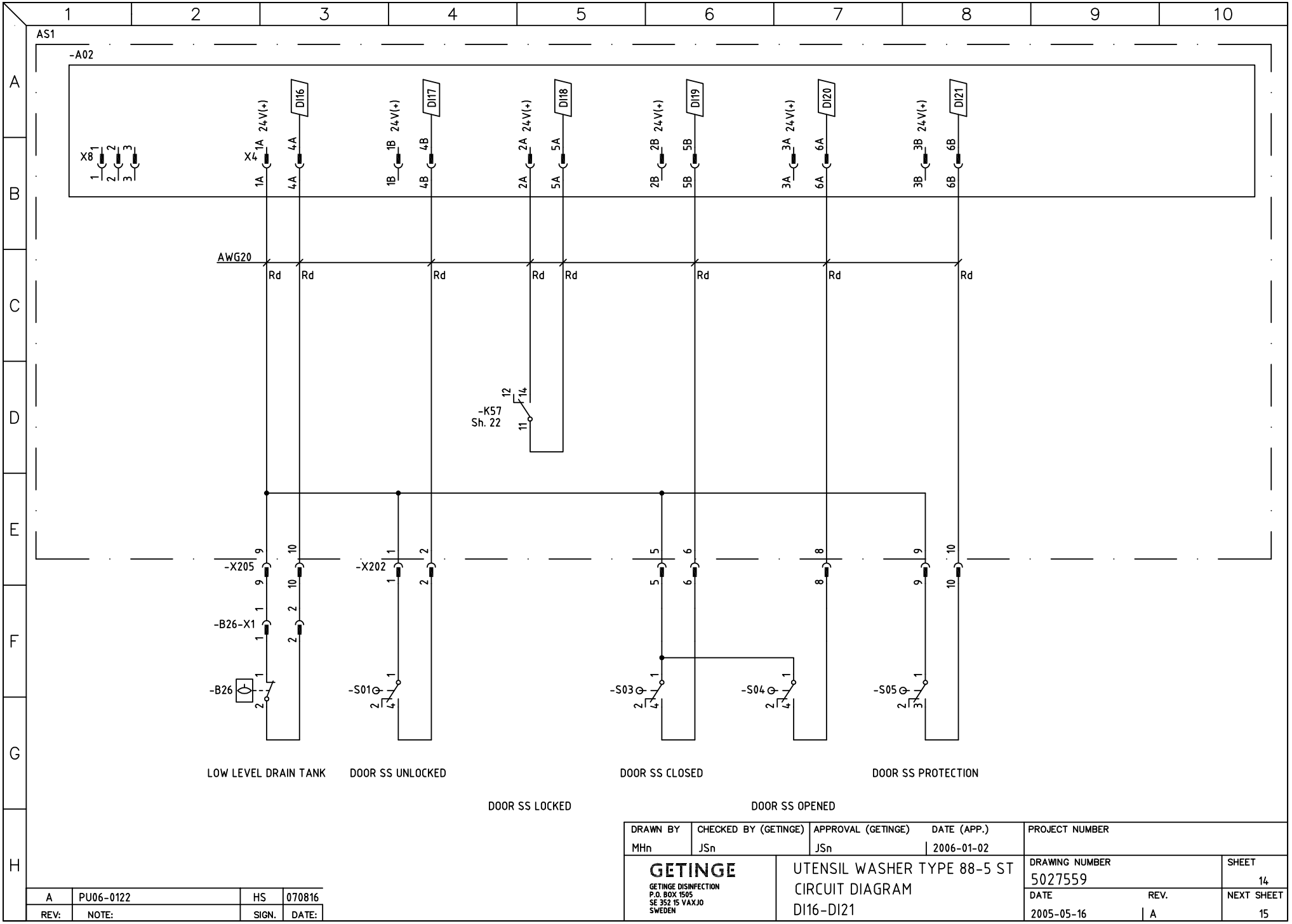

DRAWN BY	CHECKED BY (GETINGE)	APPROVAL (GETINGE)	DATE (APP.)	PROJECT NUMBER
MHn	JSn	JSn	2006-01-02	

GETINGE
GETINGE DISINFECTION
P.O. BOX 1505
SE 352 15 VAXJO
SWEDEN

UTENSIL WASHER TYPE 88-5 ST
CIRCUIT DIAGRAM
DI16-DI21

DRAWING NUMBER	SHEET
5027559	14
DATE / REV.	NEXT SHEET
2005-05-16 / A	15

REV:	NOTE:	SIGN.	DATE:
A	PU06-0122	HS	070816

Downloaded from www.Manualslib.com manuals search engine

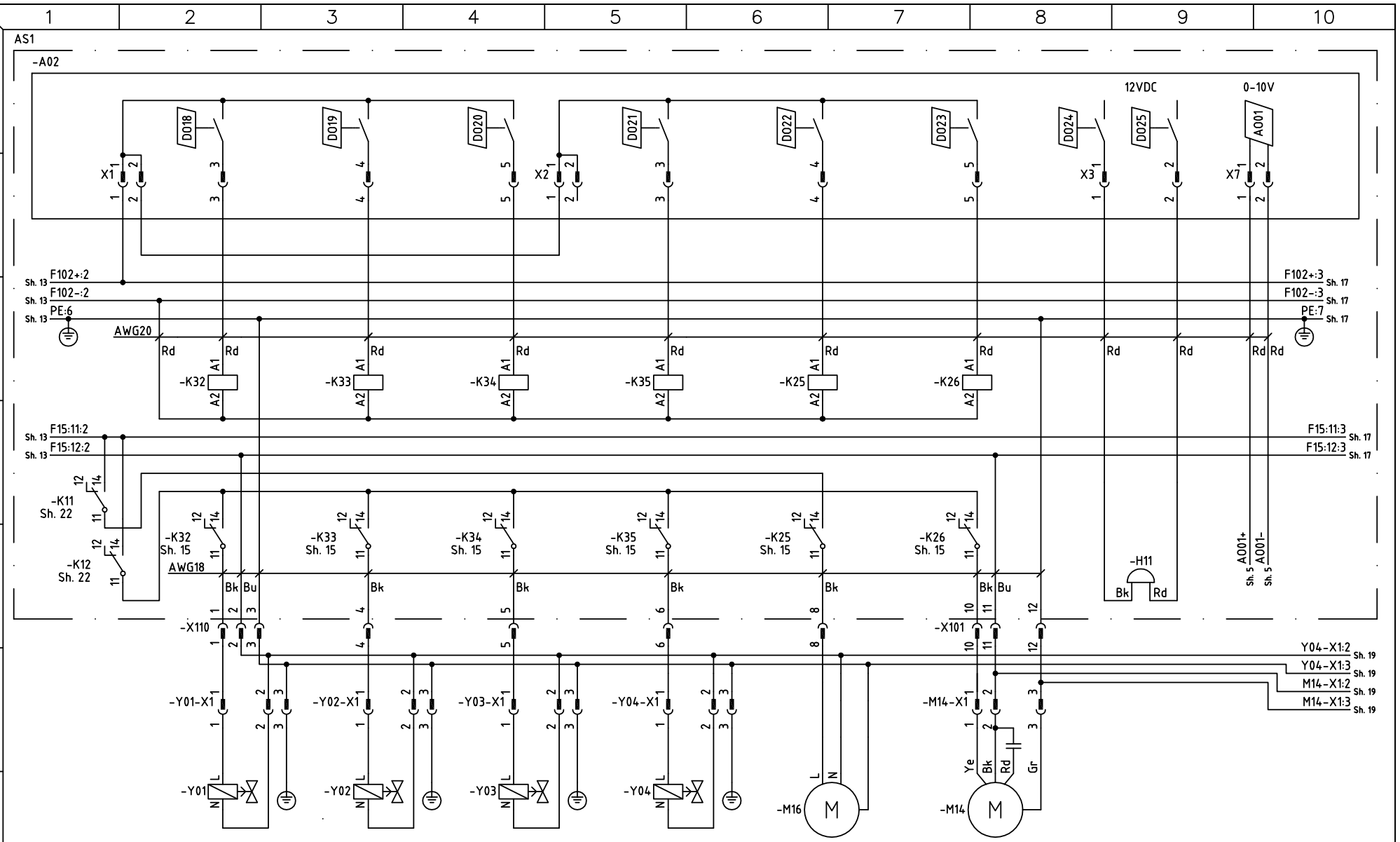

DRAWN BY	CHECKED BY (GETINGE)	APPROVAL (GETINGE)	DATE (APP.)	PROJECT NUMBER
MHn	JSn	JSn	2006-01-02	

GETINGE
GETINGE DISINFECTION
P.O. BOX 1505
SE 352 15 VAXJO
SWEDEN

UTENSIL WASHER TYPE 88-5 ST
CIRCUIT DIAGRAM
D018-D025, A001

DRAWING NUMBER	SHEET
5027559	15
DATE / REV.	NEXT SHEET
2005-05-16 / A	16

REV:	NOTE:	SIGN.	DATE:
A	PU06-0122	HS	070816

Downloaded from www.Manualslib.com manuals search engine

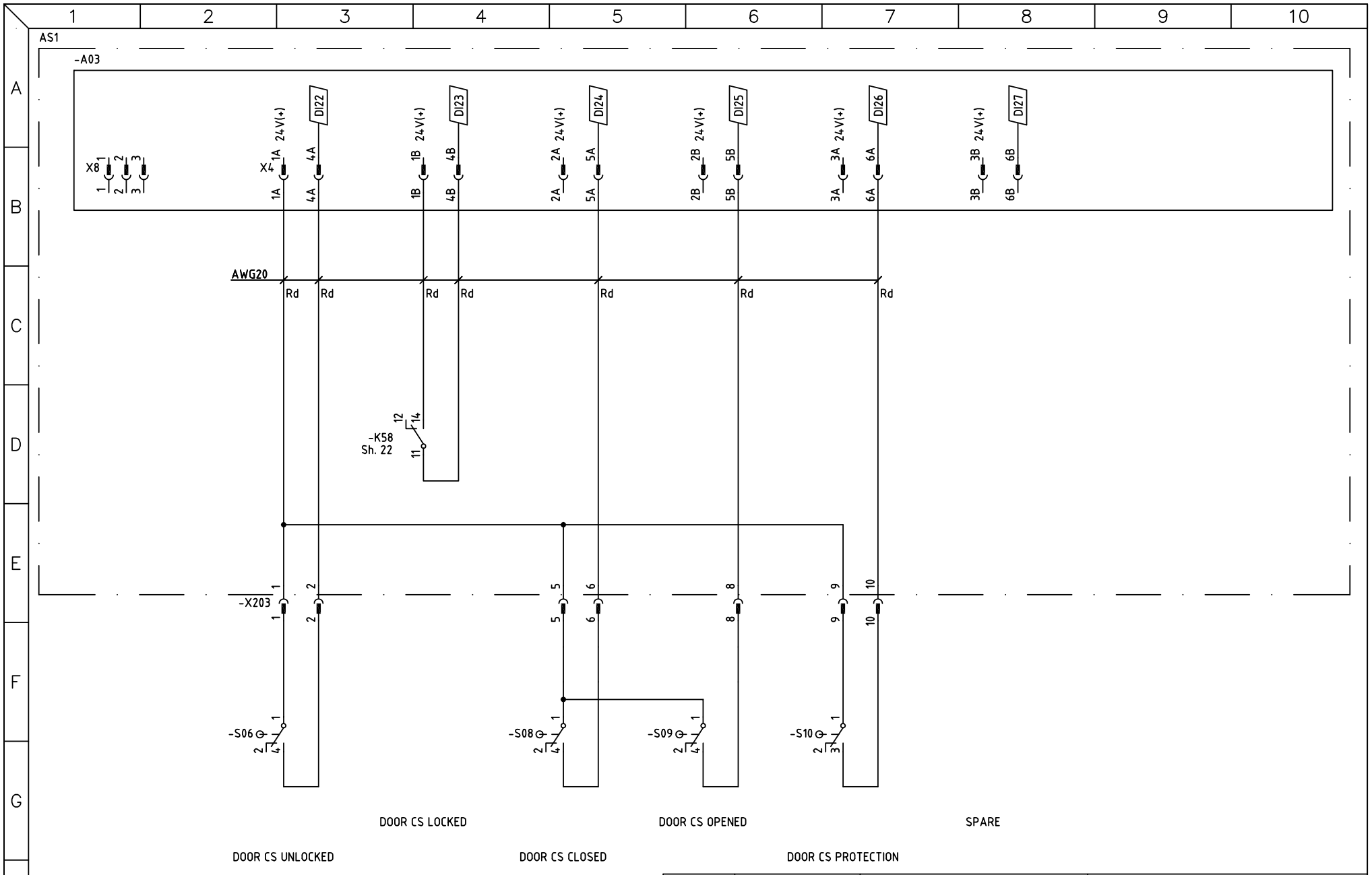

DRAWN BY	CHECKED BY (GETINGE)	APPROVAL (GETINGE)	DATE (APP.)	PROJECT NUMBER
MHn	JSn	JSn	2006-01-02	

GETINGE
GETINGE DISINFECTION
P.O. BOX 1505
SE 352 15 VAXJO
SWEDEN

UTENSIL WASHER TYPE 88-5 ST
CIRCUIT DIAGRAM
DI22-DI27

DRAWING NUMBER	SHEET
5027559	16
DATE / REV.	NEXT SHEET
2005-05-16 / A	17

REV:	NOTE:	SIGN.	DATE:
A	PU06-0122	HS	070816

Downloaded from www.Manualslib.com manuals search engine

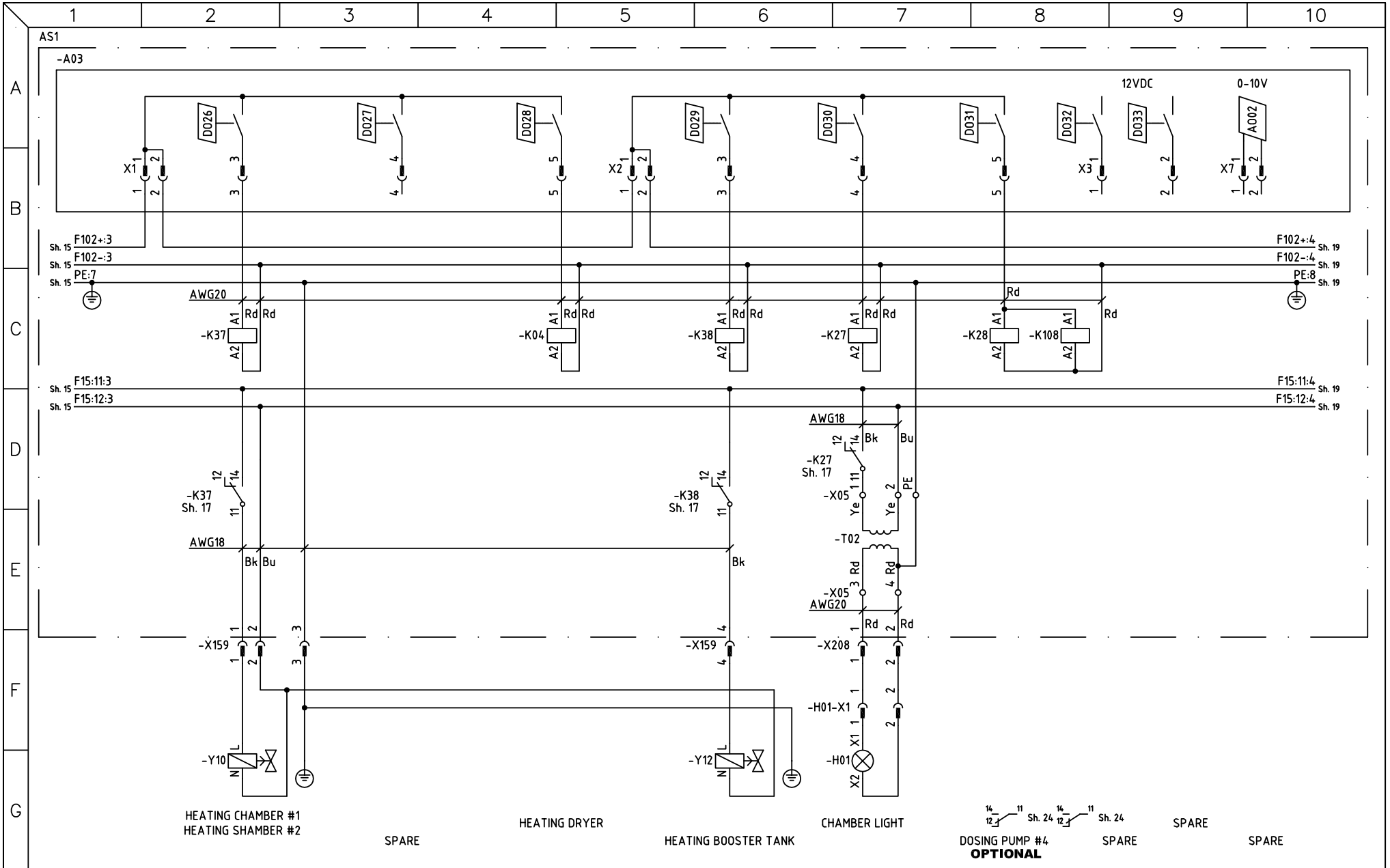

DRAWN BY	CHECKED BY (GETINGE)	APPROVAL (GETINGE)	DATE (APP.)	PROJECT NUMBER
MHn	JSn	JSn	2006-01-02	

GETINGE
GETINGE DISINFECTION
P.O. BOX 1505
SE 352 15 VAXJO
SWEDEN

UTENSIL WASHER TYPE 88-5 ST
CIRCUIT DIAGRAM
D026-D033, A002

DRAWING NUMBER	SHEET
5027559	17
DATE / REV.	NEXT SHEET
2005-05-16 / A	18

A	PU06-0122	HS	070816
REV:	NOTE:	SIGN.	DATE:

Downloaded from www.Manualslib.com manuals search engine

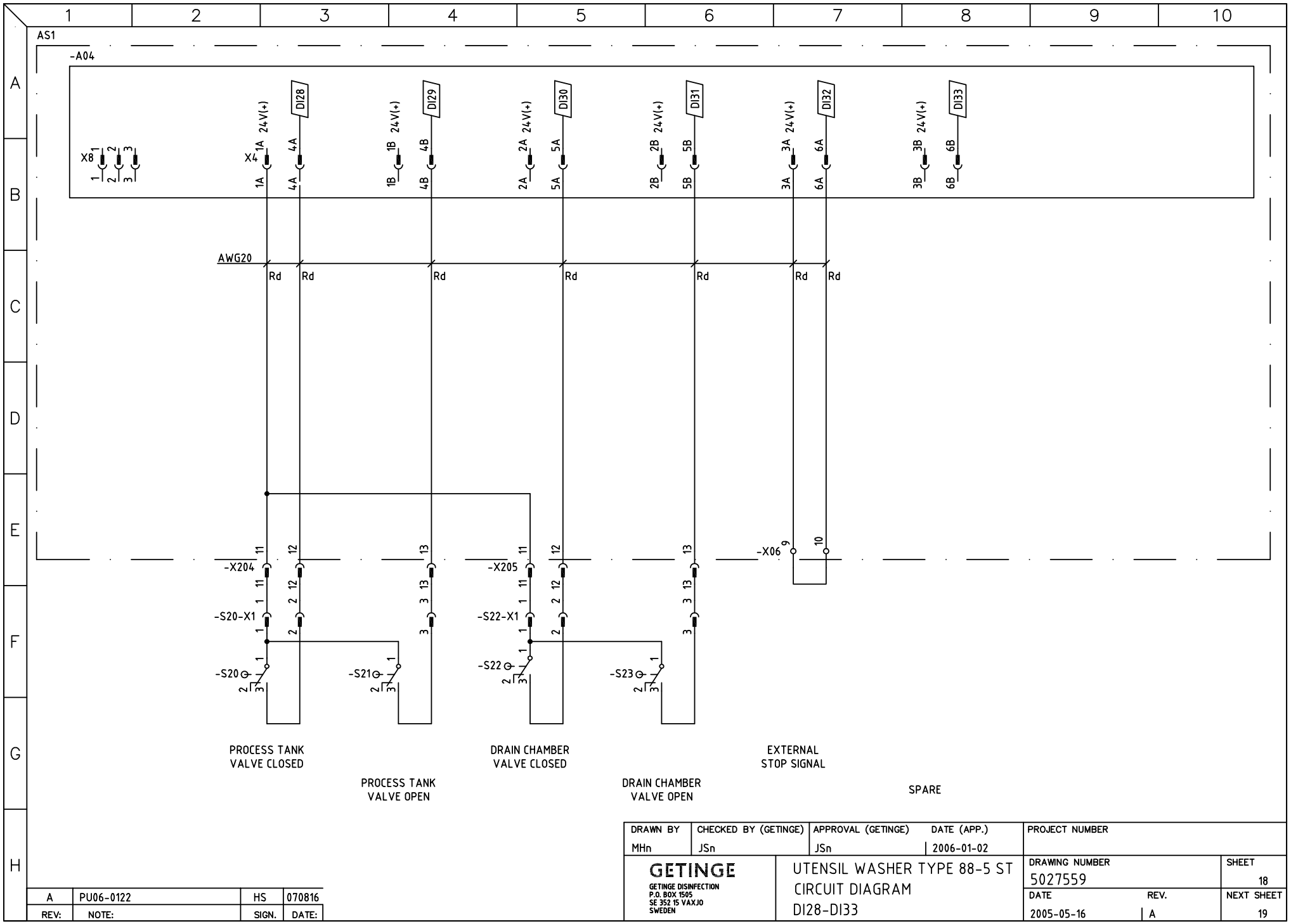

DRAWN BY	CHECKED BY (GETINGE)	APPROVAL (GETINGE)	DATE (APP.)	PROJECT NUMBER
MHn	JSn	JSn	2006-01-02	

GETINGE
GETINGE DISINFECTION
P.O. BOX 1505
SE 352 15 VAXJO
SWEDEN

UTENSIL WASHER TYPE 88-5 ST
CIRCUIT DIAGRAM
DI28-DI33

DRAWING NUMBER	SHEET
5027559	18
DATE / REV.	NEXT SHEET
2005-05-16 / A	19

REV:	NOTE:	SIGN.	DATE:
A	PU06-0122	HS	070816

Downloaded from www.Manualslib.com manuals search engine

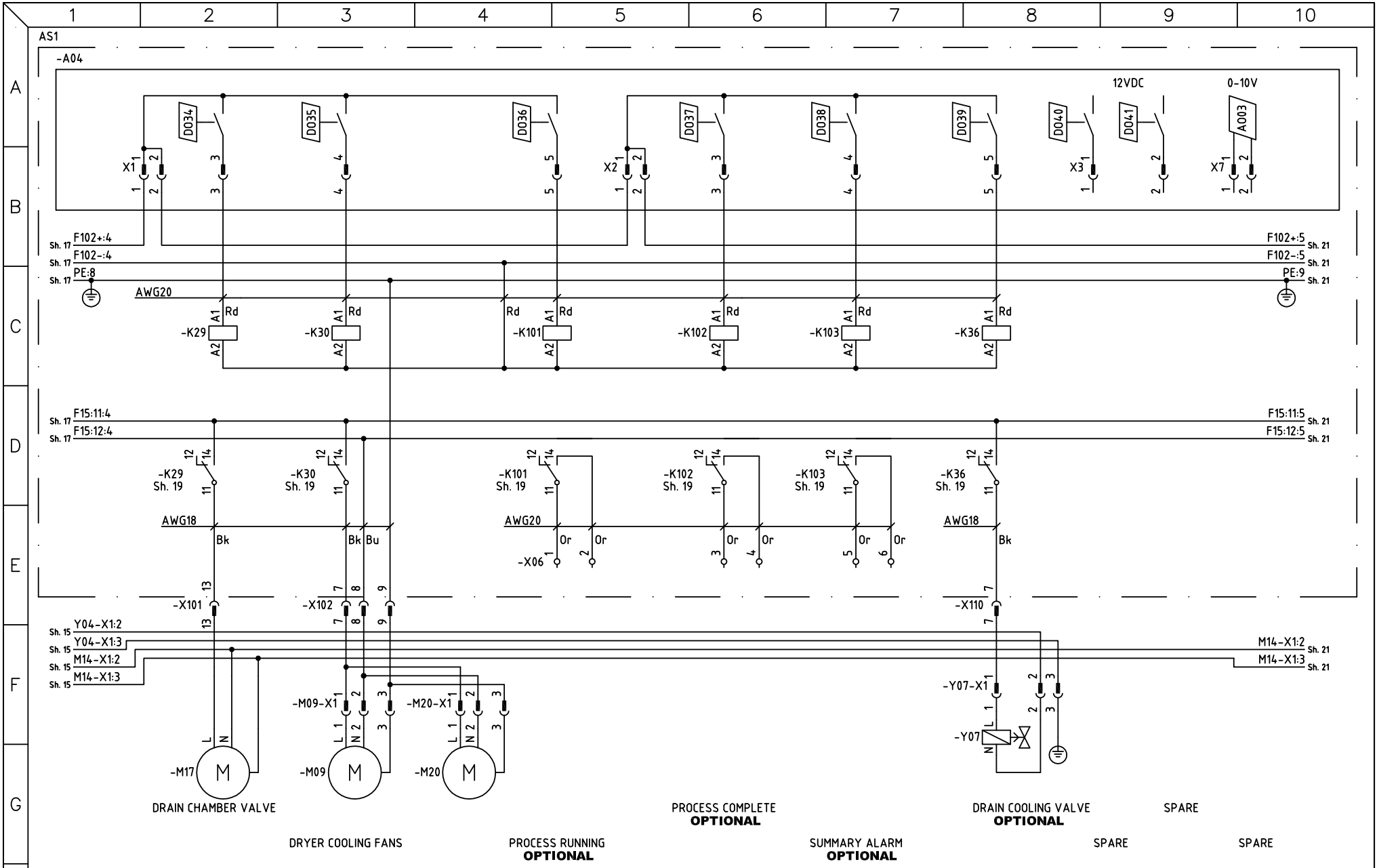

A	PU06-0122	HS	070816
REV:	NOTE:	SIGN.	DATE:

DRAWN BY	CHECKED BY (GETINGE)	APPROVAL (GETINGE)	DATE (APP.)	PROJECT NUMBER
MHn	JSn	JSn	2006-01-02	

GETINGE
GETINGE DISINFECTION
P.O. BOX 1505
SE 352 15 VAXJO
SWEDEN

UTENSIL WASHER TYPE 88-5 ST
CIRCUIT DIAGRAM
D034-D041, A003

DRAWING NUMBER	SHEET
5027559	19
DATE / REV.	NEXT SHEET
2005-05-16 / A	20

Downloaded from www.Manualslib.com manuals search engine

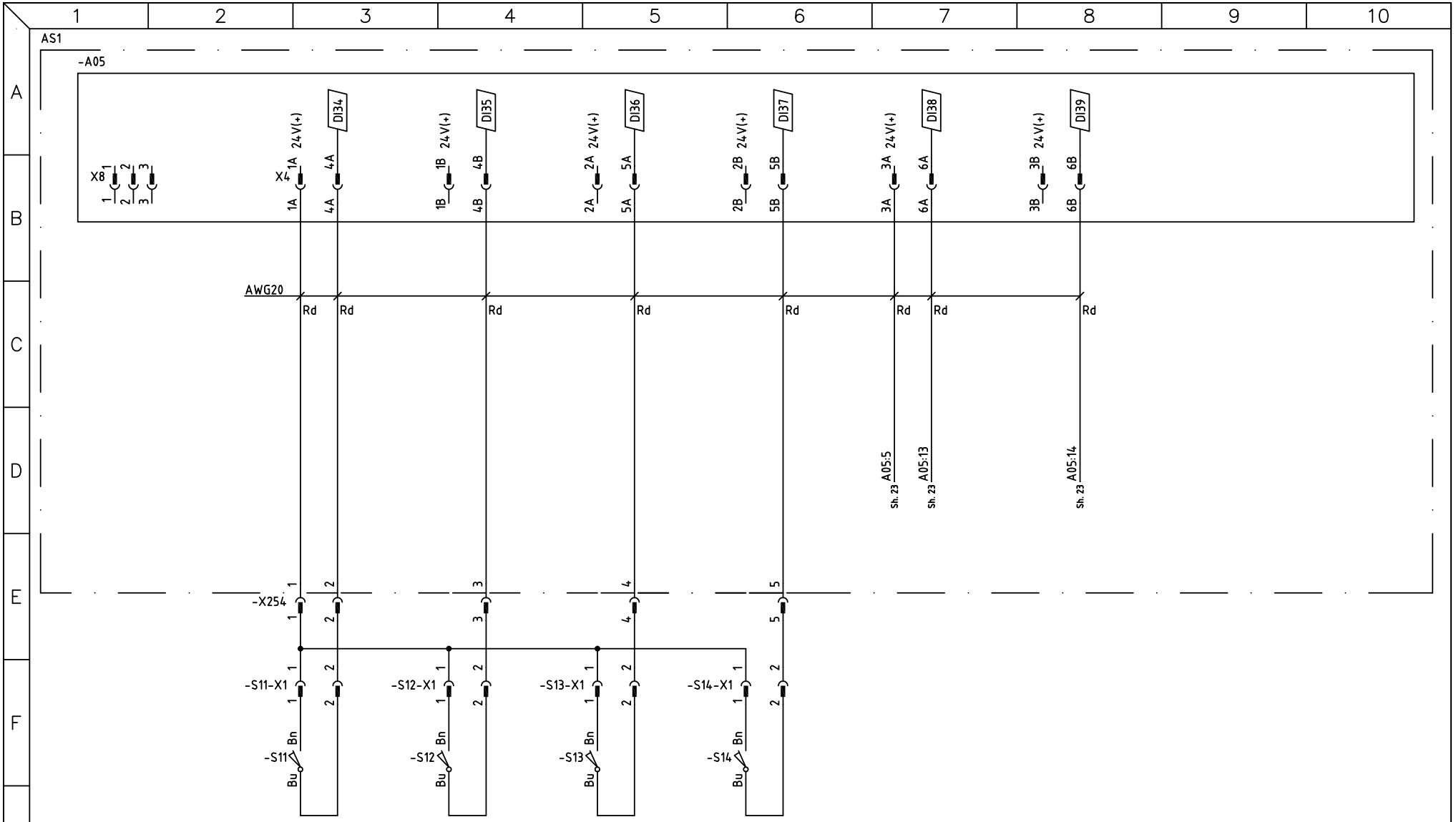

DRAWN BY	CHECKED BY (GETINGE)	APPROVAL (GETINGE)	DATE (APP.)	PROJECT NUMBER
MHn	JSn	JSn	2006-01-02	

GETINGE
GETINGE DISINFECTION
P.O. BOX 1505
SE 352 15 VAXJO
SWEDEN

UTENSIL WASHER TYPE 88-5 ST
CIRCUIT DIAGRAM
DI34-DI39

DRAWING NUMBER	SHEET
5027559	20
DATE / REV.	NEXT SHEET
2005-05-16 / A	21

REV:	NOTE:	SIGN.	DATE:
A	PU06-0122	HS	070816

Downloaded from www.Manualslib.com manuals search engine

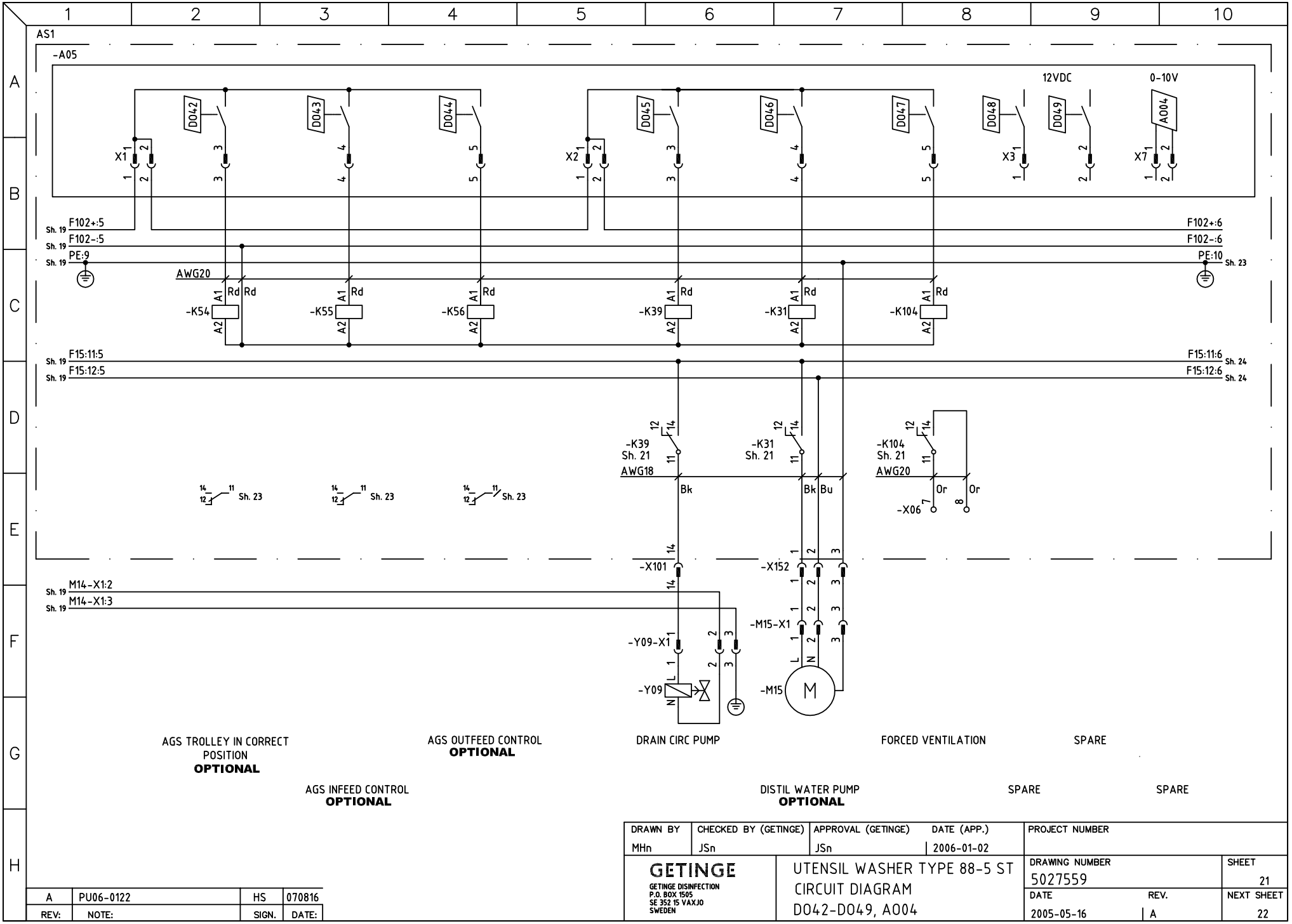

DRAWN BY	CHECKED BY (GETINGE)	APPROVAL (GETINGE)	DATE (APP.)	PROJECT NUMBER
MHn	JSn	JSn	2006-01-02	

GETINGE
GETINGE DISINFECTION
P.O. BOX 1505
SE 352 15 VAXJO
SWEDEN

UTENSIL WASHER TYPE 88-5 ST
CIRCUIT DIAGRAM
D042-D049, A004

DRAWING NUMBER	SHEET
5027559	21
DATE / REV.	NEXT SHEET
2005-05-16 / A	22

REV:	NOTE:	SIGN.	DATE:
A	PU06-0122	HS	070816

Downloaded from www.Manualslib.com manuals search engine

THIS DRAWING CONTAINS CONFIDENTIAL INFORMATION AND REMAINS THE PROPERTY OF GETINGE DISINFECTION AB WITHOUT WHOSE PERMISSION IT MAY NOT BE COPIED, SHOWN OR HANDED TO A THIRD PART OR USED AT THE BASIS OF ALTERNATE DESIGNS

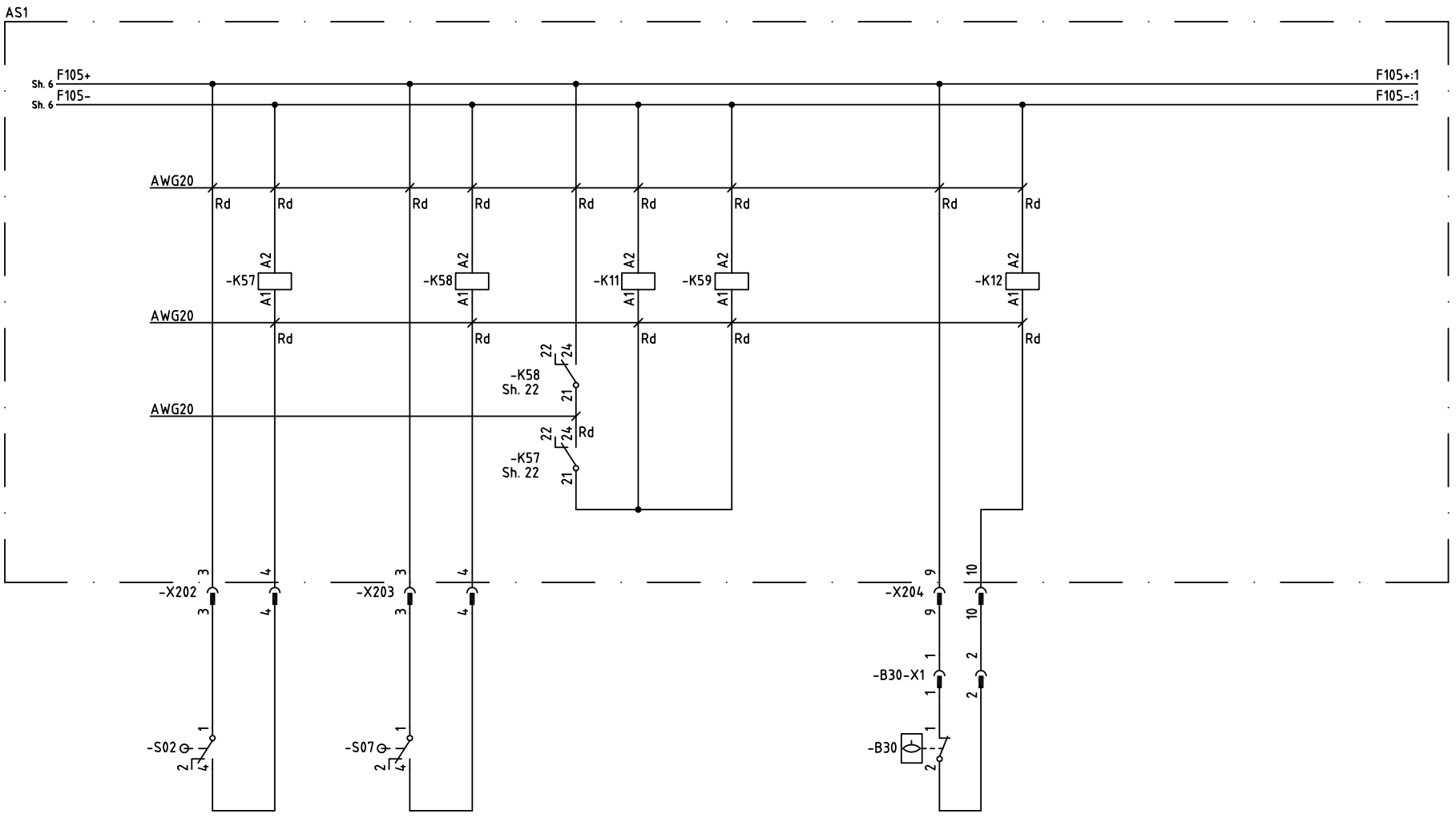

DOOR SS LOCKED

14 12 11 Sh. 14
24 22 21 Sh. 22

DOOR CS LOCKED

14 12 11 Sh. 16
24 22 21 Sh. 22

HARDWARE INTERLOCK

14 12 11 Sh. 15
14 12 11 Sh. 12

HIGH LEVEL PROCESS TANK

14 12 11 Sh. 15

DRAWN BY	CHECKED BY (GETINGE)	APPROVAL (GETINGE)	DATE (APP.)	PROJECT NUMBER
MHn	JSn	JSn	2006-01-02	

GETINGE
GETINGE DISINFECTION
P.O. BOX 1505
SE 352 15 VÄXJÖ
SWEDEN

UTENSIL WASHER TYPE 88-5 ST
CIRCUIT DIAGRAM
HARDWARE INTERLOCKS

DRAWING NUMBER	SHEET
5027559	22
DATE / REV.	NEXT SHEET
2005-05-16 / A	23

REV:	NOTE:	SIGN.	DATE:
A	PU06-0122	HS	070816

Downloaded from www.Manualslib.com manuals search engine

THIS DRAWING CONTAINS CONFIDENTIAL INFORMATION AND REMAINS THE PROPERTY OF GETINGE DISINFECTION AB WITHOUT WHOSE PERMISSION IT MAY NOT BE COPIED, SHOWN OR HANDED TO A THIRD PART OR USED AT THE BASIS OF ALTERNATE DESIGNS

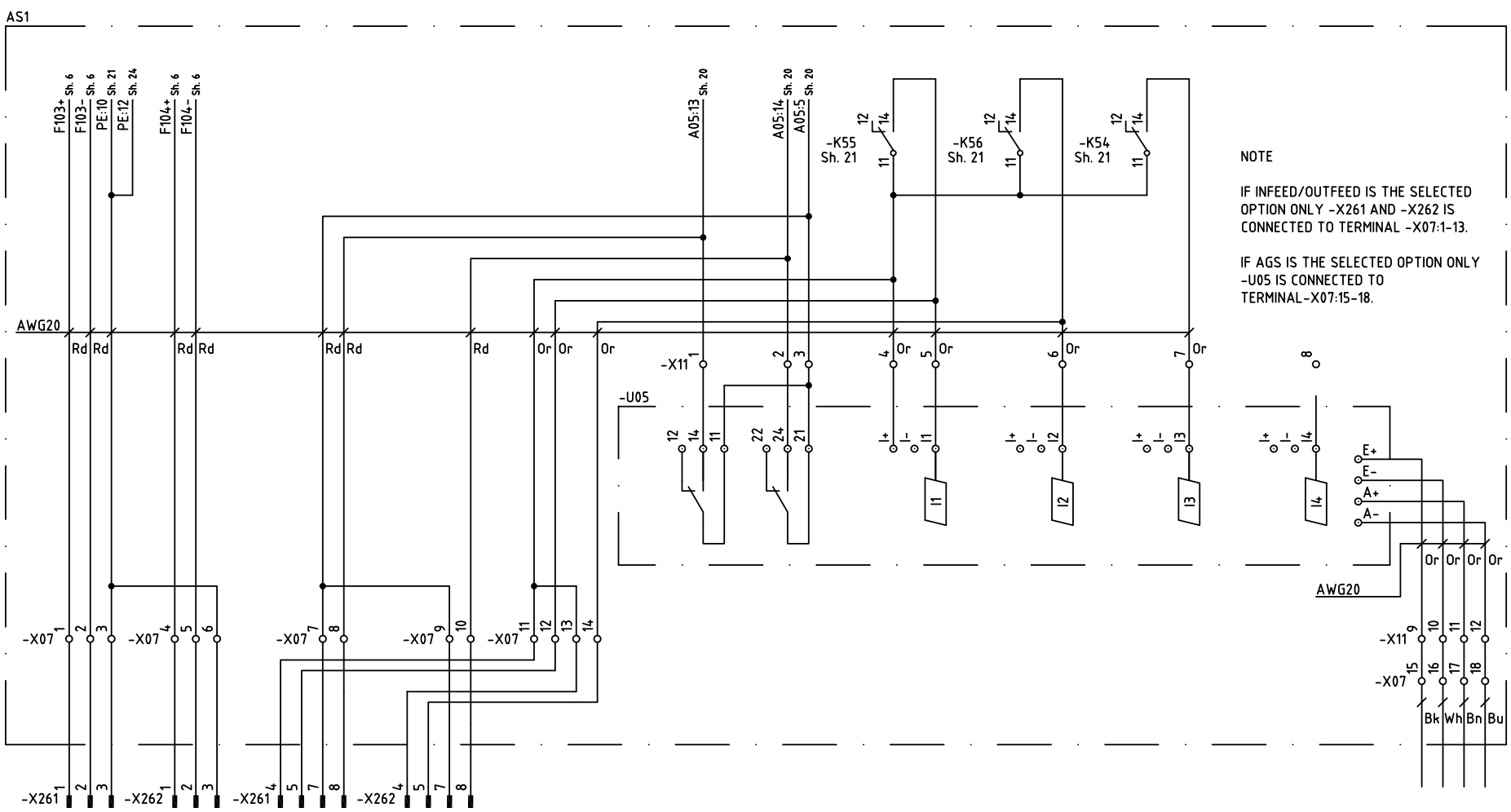

DRAWN BY	CHECKED BY (GETINGE)	APPROVAL (GETINGE)	DATE (APP.)	PROJECT NUMBER
MHn	JSn	JSn	2006-01-02	

GETINGE
GETINGE DISINFECTION
P.O. BOX 1505
SE 352 15 VÄXJÖ
SWEDEN

UTENSIL WASHER TYPE 88-5 ST
CIRCUIT DIAGRAM
AGS SIGNALS

DRAWING NUMBER	SHEET
5027559	23
DATE / REV.	NEXT SHEET
2005-05-16 / A	24

REV:	NOTE:	SIGN.	DATE:
A	PU06-0122	HS	070816

Downloaded from www.Manualslib.com manuals search engine

THIS DRAWING CONTAINS CONFIDENTIAL INFORMATION AND REMAINS THE PROPERTY OF GETINGE DISINFECTION AB WITHOUT WHOSE PERMISSION IT MAY NOT BE COPIED, SHOWN OR HANDED TO A THIRD PART OR USED AT THE BASIS OF ALTERNATE DESIGNS

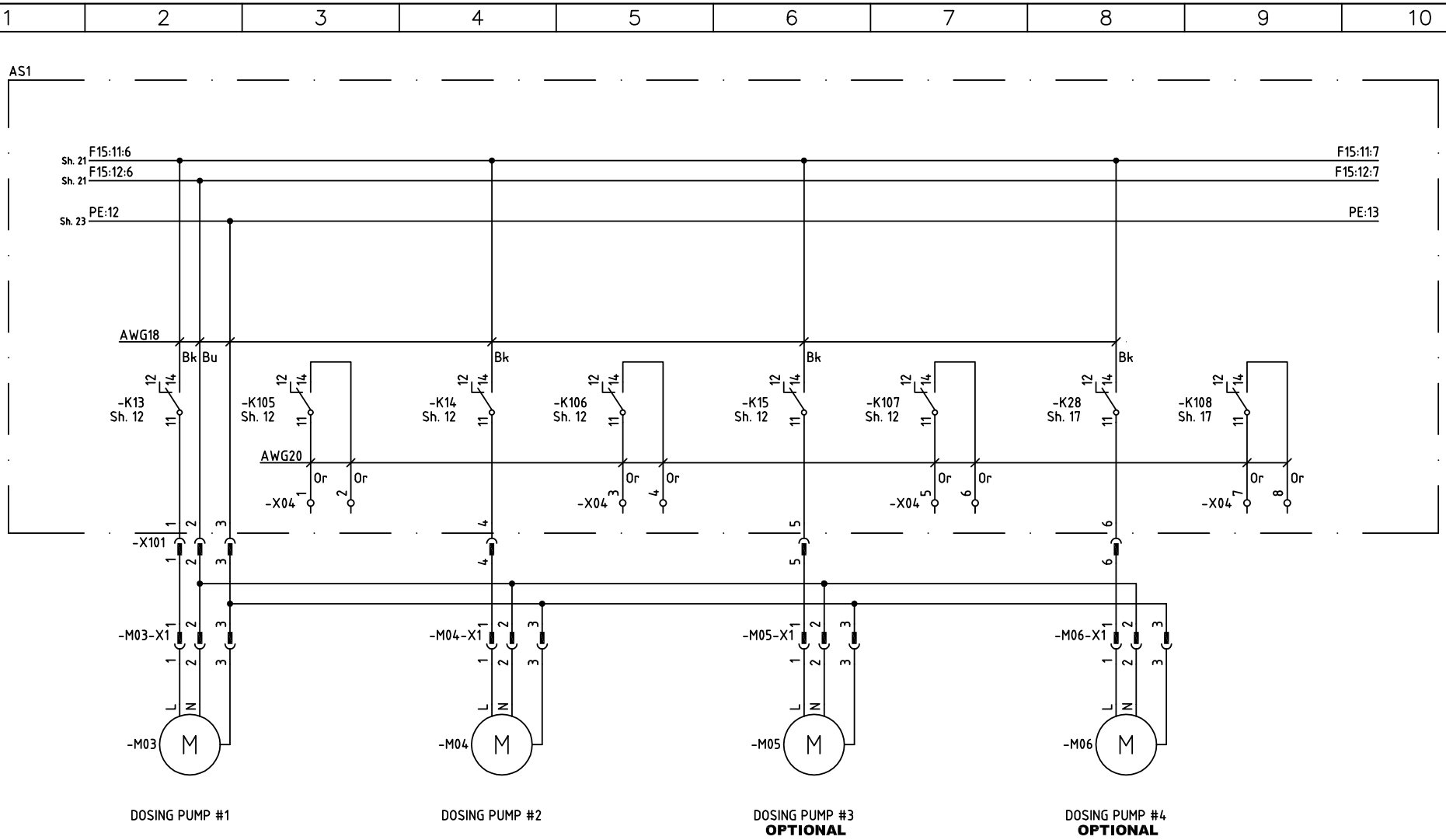

DRAWN BY	CHECKED BY (GETINGE)	APPROVAL (GETINGE)	DATE (APP.)	PROJECT NUMBER
MHn	JSn	JSn	2006-01-02	

GETINGE
GETINGE DISINFECTION
P.O. BOX 1505
SE 352 15 VÄXJÖ
SWEDEN

UTENSIL WASHER TYPE 88-5 ST
CIRCUIT DIAGRAM
DOSING PUMPS

DRAWING NUMBER	SHEET
5027559	24
DATE / REV.	NEXT SHEET
2005-05-16 / A	51

REV:	NOTE:	SIGN.	DATE:
A	PU06-0122	HS	070816

Downloaded from www.Manualslib.com manuals search engine

THIS DRAWING CONTAINS CONFIDENTIAL INFORMATION AND REMAINS THE PROPERTY OF GETINGE DISINFECTION AB WITHOUT WHOSE PERMISSION IT MAY NOT BE COPIED, SHOWN OR HANDED TO A THIRD PART OR USED AT THE BASIS OF ALTERNATE DESIGNS

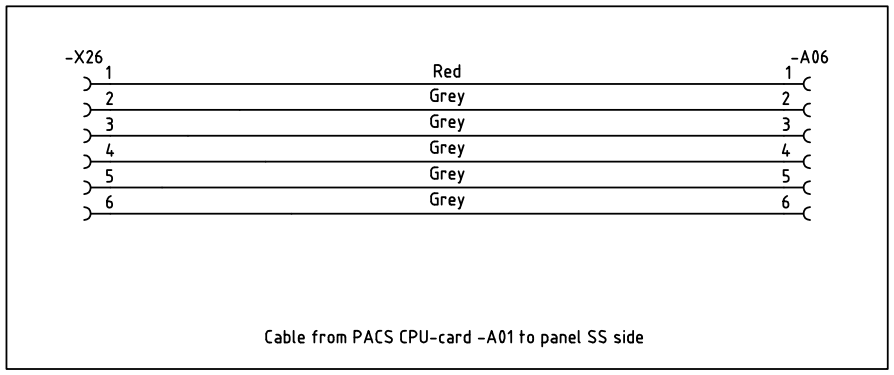

Cable from PACS CPU-card -A01 to panel SS side

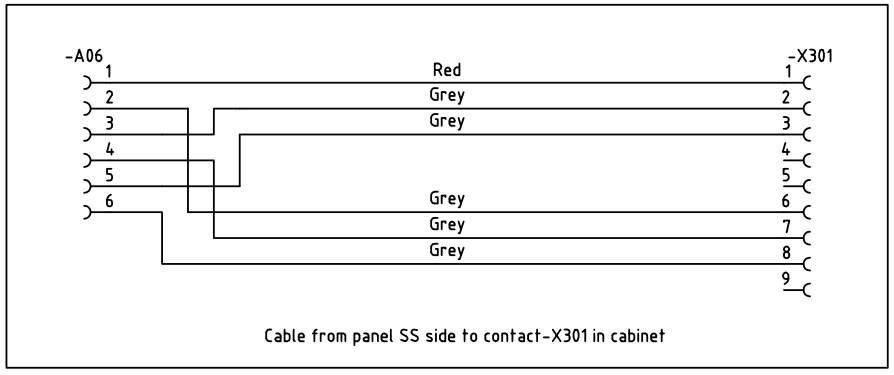

Cable from panel SS side to contact-X301 in cabinet

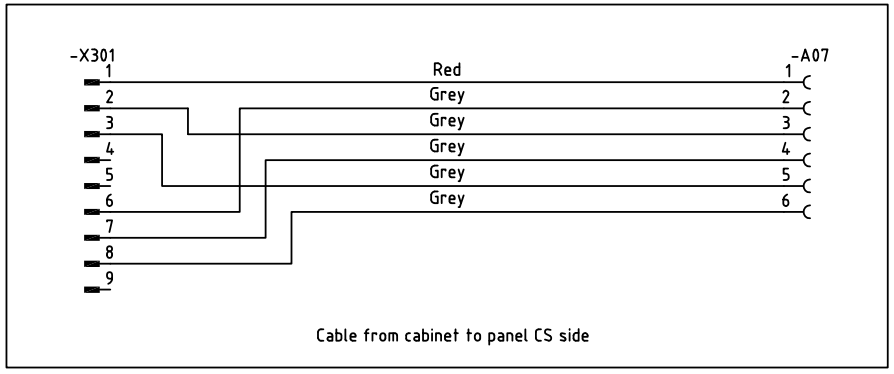

Cable from cabinet to panel CS side

DRAWN BY	CHECKED BY (GETINGE)	APPROVAL (GETINGE)	DATE (APP.)	PROJECT NUMBER
MHn	JSn	JSn	2006-01-02	

GETINGE
GETINGE DISINFECTION
P.O. BOX 1505
SE 352 15 VÄXJÖ
SWEDEN

UTENSIL WASHER TYPE 88-5 ST
CIRCUIT DIAGRAM
CABLES, PANEL CS AND SS

DRAWING NUMBER		SHEET
5027559		51
DATE	REV.	NEXT SHEET
2005-05-16	A	52

REV:	NOTE:	SIGN.	DATE:
A	PU06-0122	HS	070816

Downloaded from www.Manualslib.com manuals search engine

THIS DRAWING CONTAINS CONFIDENTIAL INFORMATION AND REMAINS THE PROPERTY OF GETINGE DISINFECTION AB WITHOUT WHOSE PERMISSION IT MAY NOT BE COPIED, SHOWN OR HANDED TO A THIRD PART OR USED AT THE BASIS OF ALTERNATE DESIGNS

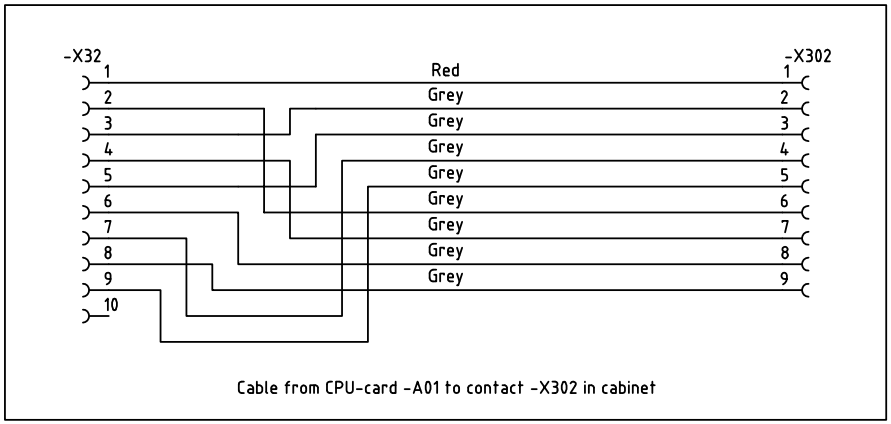

Cable from CPU-card -A01 to contact -X302 in cabinet

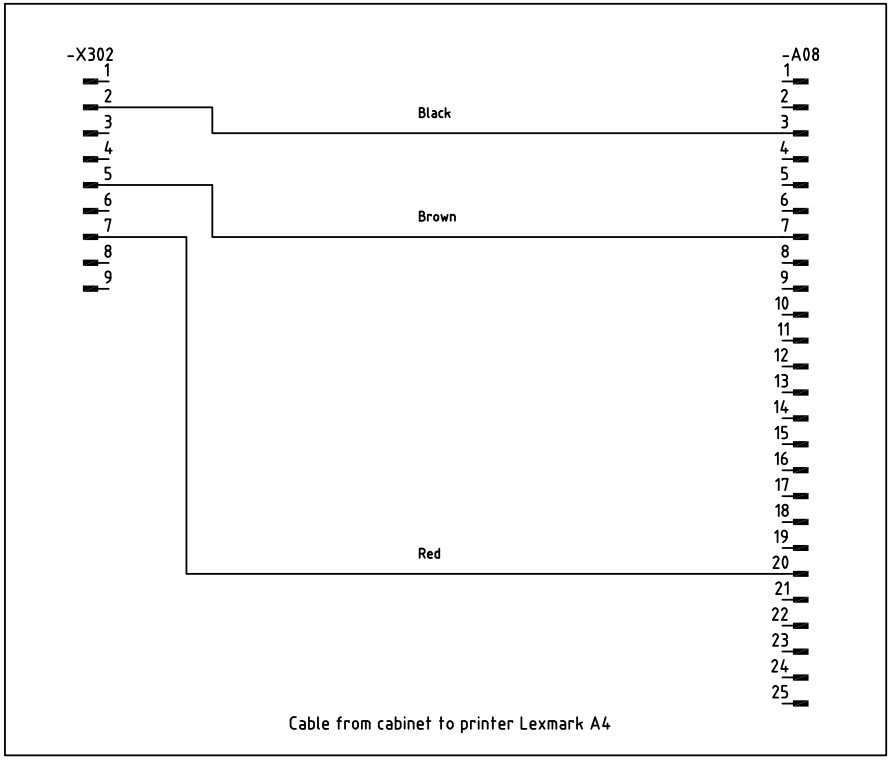

Cable from cabinet to printer Lexmark A4

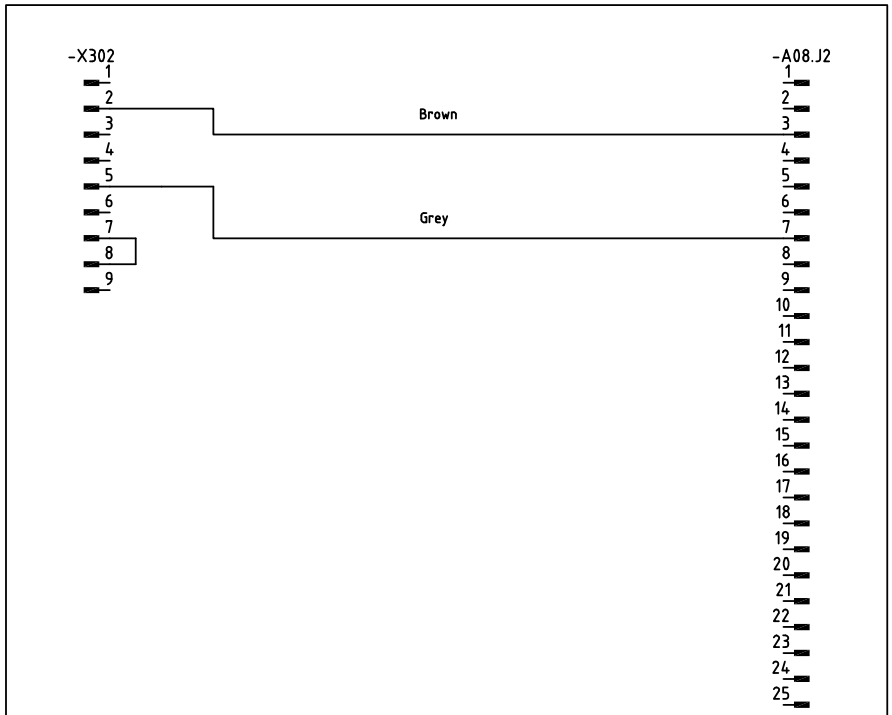

Cable from cabinet to printer CUSTOM

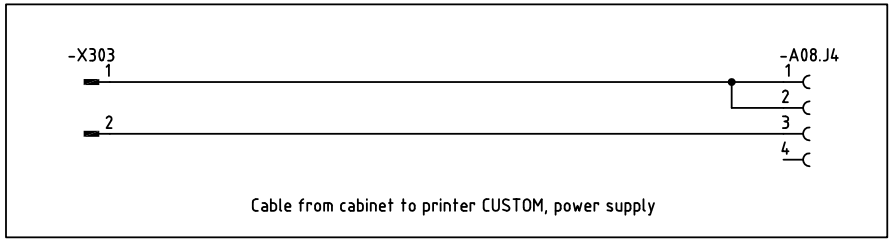

Cable from cabinet to printer CUSTOM, power supply

DRAWN BY	CHECKED BY (GETINGE)	APPROVAL (GETINGE)	DATE (APP.)	PROJECT NUMBER
MHn	JSn	JSn	2006-01-02	

GETINGE
GETINGE DISINFECTION
P.O. BOX 1505
SE 352 15 VÄXJÖ
SWEDEN

UTENSIL WASHER TYPE 88-5 ST
CIRCUIT DIAGRAM
CABLES, PRINTER

DRAWING NUMBER		SHEET
5027559		52
DATE	REV.	NEXT SHEET
2005-05-16	A	53

A	PU06-0122	HS	070816
REV:	NOTE:	SIGN.	DATE:

Downloaded from www.Manualslib.com manuals search engine

THIS DRAWING CONTAINS CONFIDENTIAL INFORMATION AND REMAINS THE PROPERTY OF GETINGE DISINFECTION AB WITHOUT WHOSE PERMISSION IT MAY NOT BE COPIED, SHOWN OR HANDED TO A THIRD PART OR USED AT THE BASIS OF ALTERNATE DESIGNS

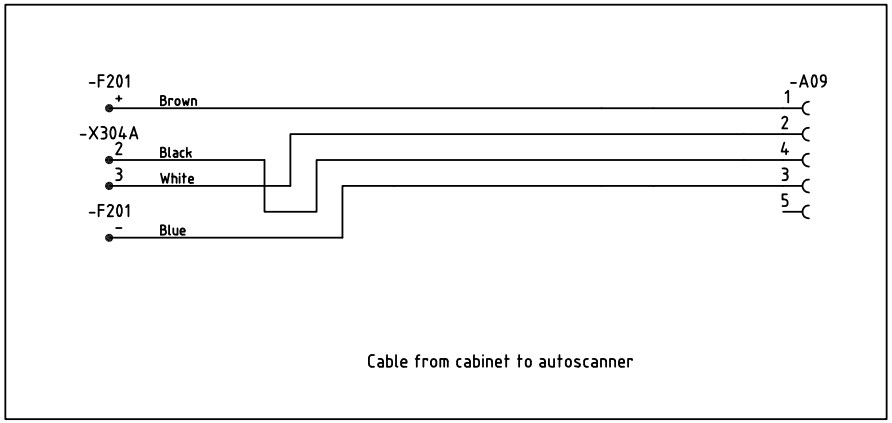

Cable from cabinet to autoscanner

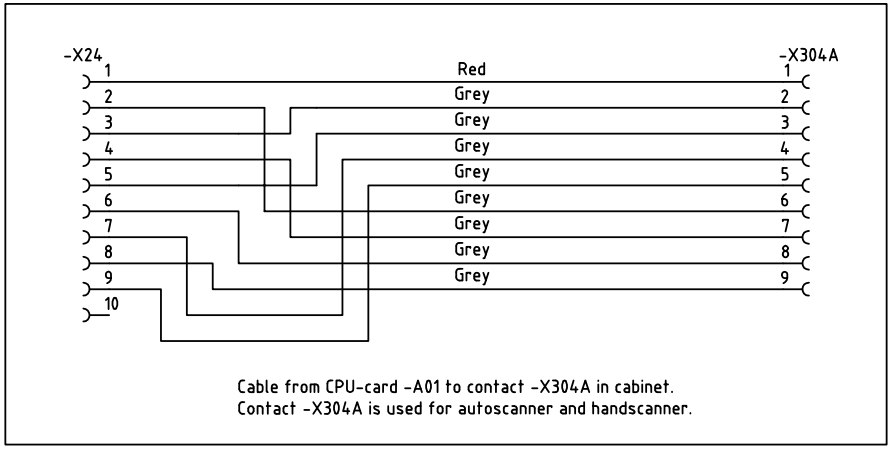

Cable from CPU-card -A01 to contact -X304A in cabinet.
Contact -X304A is used for autoscanner and handscanner.

A	PU06-0122	HS	070816
REV:	NOTE:	SIGN.	DATE:

DRAWN BY	CHECKED BY (GETINGE)	APPROVAL (GETINGE)	DATE (APP.)	PROJECT NUMBER	
MHn	JSn	JSn	2006-01-02		

GETINGE
GETINGE DISINFECTION
P.O. BOX 1505
SE 352 15 VAXJO
SWEDEN

UTENSIL WASHER TYPE 88-5 ST
CIRCUIT DIAGRAM
CABLES, AUTOSCANNER

DRAWING NUMBER		SHEET
5027559		53
DATE	REV.	NEXT SHEET
2005-05-16	A	54

Downloaded from www.Manualslib.com manuals search engine

THIS DRAWING CONTAINS CONFIDENTIAL INFORMATION AND REMAINS THE PROPERTY OF GETINGE DISINFECTION AB WITHOUT WHOSE PERMISSION IT MAY NOT BE COPIED, SHOWN OR HANDED TO A THIRD PART OR USED AT THE BASIS OF ALTERNATE DESIGNS

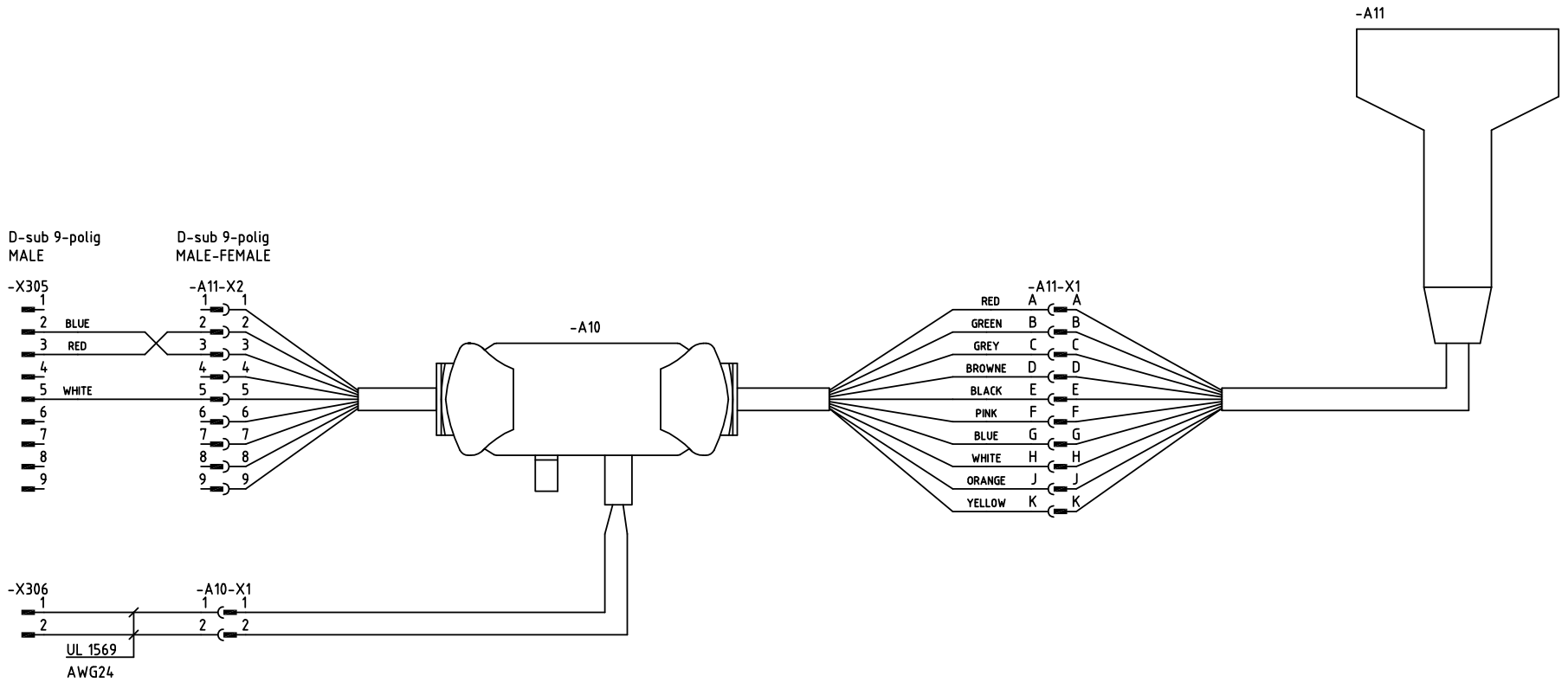

A	PU06-0122	HS	070816
REV:	NOTE:	SIGN.	DATE:

DRAWN BY	CHECKED BY (GETINGE)	APPROVAL (GETINGE) DATE (APP.)	PROJECT NUMBER
MHn	JSn	JSn 2006-01-02	

GETINGE
GETINGE DISINFECTION
P.O. BOX 1505
SE 352 15 VAXJO
SWEDEN

UTENSIL WASHER TYPE 88-5 ST
CIRCUIT DIAGRAM
CABLE, HANDSCANNER

DRAWING NUMBER		SHEET
5027559		54
DATE	REV.	NEXT SHEET
2005-05-16	A	101

Downloaded from www.Manualslib.com manuals search engine

THIS DRAWING CONTAINS CONFIDENTIAL INFORMATION AND REMAINS THE PROPERTY OF GETINGE DISINFECTION AB WITHOUT WHOSE PERMISSION IT MAY NOT BE COPIED, SHOWN OR HANDED TO A THIRD PART OR USED AT THE BASIS OF ALTERNATE DESIGNS

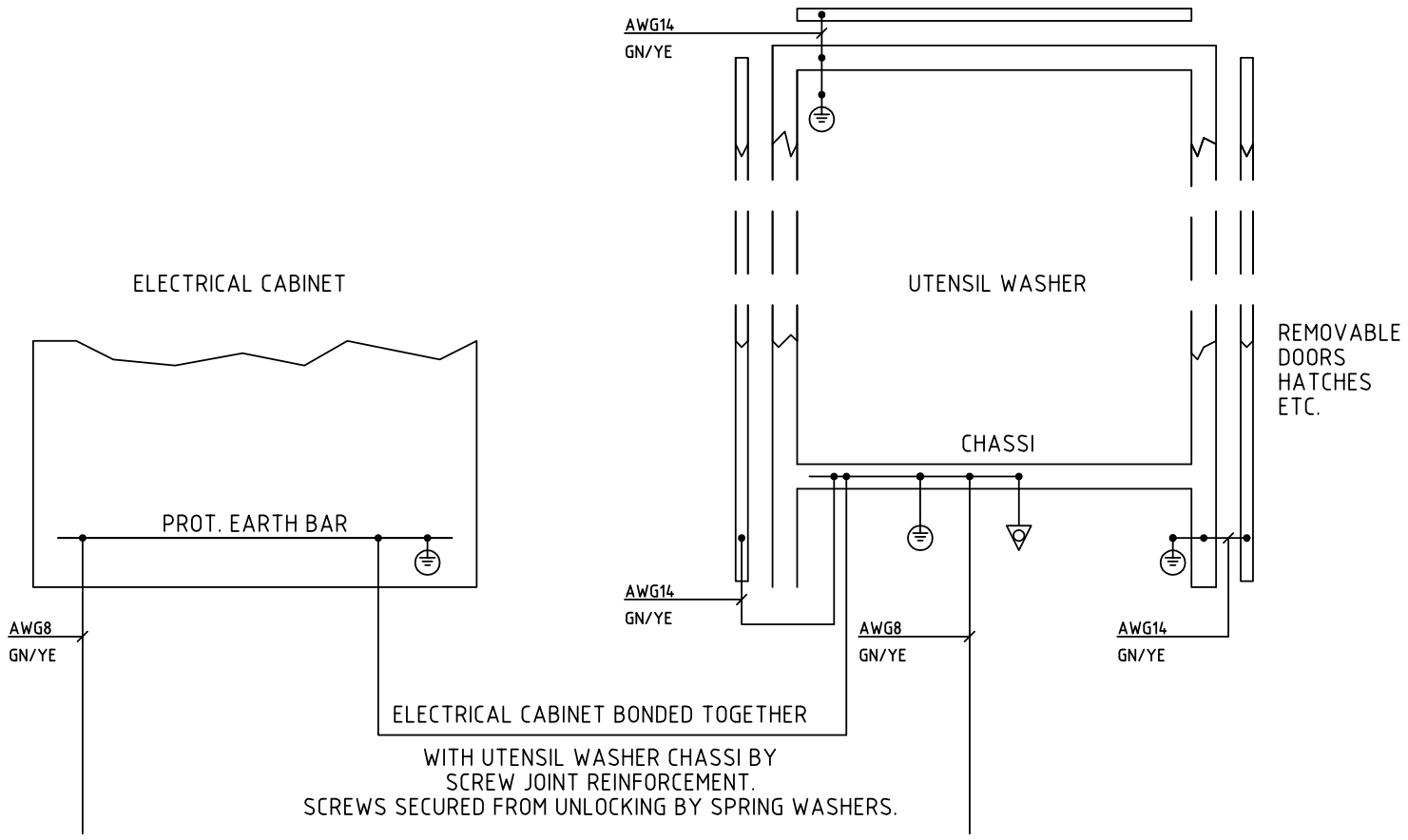

ALL CONNECTIONS TO
PROTECTIVE EARTH SYSTEM
SHALL BE MARKED WITH
FOLLOWING SYMBOL

DRAWN BY	CHECKED BY (GETINGE)	APPROVAL (GETINGE)	DATE (APP.)
MHn	JSn	JSn	2006-01-02

PROJECT NUMBER

GETINGE
GETINGE DISINFECTION
P.O. BOX 1505
SE 352 15 VÄXJÖ
SWEDEN

UTENSIL WASHER TYPE 88-5 ST
CIRCUIT DIAGRAM
PROTECTIVE BONDING CIRCUIT

DRAWING NUMBER	SHEET
5027559	101
DATE / REV.	NEXT SHEET
2005-05-16 / A	-

REV:	NOTE:	SIGN.	DATE:
A	PU06-0122	HS	070816

Downloaded from www.Manualslib.com manuals search engine

THIS DRAWING CONTAINS CONFIDENTIAL INFORMATION AND REMAINS THE PROPERTY OF GETINGE DISINFECTION AB WITHOUT WHOSE PERMISSION IT MAY NOT BE COPIED, SHOWN OR HANDED TO A THIRD PART OR USED AT THE BASIS OF ALTERNATE DESIGNS

CONTENTS OF DRAWINGS

SHEET	DESCRIPTION	REVISION	NOTE	SHEET	DESCRIPTION	REVISION	NOTE
2	ELECTRICAL CABINET LEFT SIDE	A	380-415V, 50-60Hz, 3+N+PE	28	MONITORING SYSTEM, DI08-DI15	A	
3	POWER SUPPLY, MAIN CIRCUITS	A		29	MONITORING SYSTEM, DO00-DO08	A	
4	MAIN CIRCUITS	A		30	MONITORING SYSTEM, DO09-DO17	A	
5	CONTROL VOLTAGE, 230VAC	A		51	CABLES, PANEL CS AND SS	A	
6	CONTROL VOLTAGE, 24VDC	A		52	CABLES, PRINTER	A	
7	CONTROL VOLTAGE, 5VDC	A		53	CABLES, AUTOSCANNER	A	
8	CONTROL SYSTEM, PACS300	A		54	CABLE, HANDSCANNER	A	
9	MONITORING SYSTEM, PACS300	A		55	CABLE, CPU - MON. SYS.	A	
10	MAIN BOARD, AI00-AI07	A		101	PROTECTIVE BONDING CIRCUIT	A	
11	MAIN BOARD, DI00-DI07	A					
12	MAIN BOARD, DI08-DI15	A					
13	MAIN BOARD, DO00-DO08	A					
14	MAIN BOARD, DO09-DO17	A					
15	EXPANSION CARD #1, DI16-DI21	A					
16	EXPANSION CARD #1, DO18-DO25, AO01	A					
17	EXPANSION CARD #2, DI22-DI27	A					
18	EXPANSION CARD #2, DO26-DO33, AO02	A					
19	EXPANSION CARD #3, DI28-DI33	A					
20	EXPANSION CARD #3, DO34-DO41, AO03	A					
21	EXPANSION CARD #4, DI34-DI39	A					
22	EXPANSION CARD #4, DO42-DO49, AO04	A					
23	HARDWARE INTERLOCKS	A					
24	AGS SIGNALS	A					
25	DOSING PUMPS	A					
26	MONITORING SYSTEM, AI00-AI07	A					
27	MONITORING SYSTEM, DI00-DI07	A					

REV:	NOTE:	SIGN.	DATE:
A	PU06-0122	HS	070816

DRAWN BY	CHECKED BY (GETINGE)	APPROVAL (GETINGE)	DATE (APP.)
MHn	JSn	JSn	2006-01-02

PROJECT NUMBER

GETINGE
GETINGE DISINFECTION
P.O. BOX 1505
SE 352 15 VAXJO
SWEDEN

UTENSIL WASHER TYPE 88-5 ST
CIRCUIT DIAGRAM, MON. SYSTEM
CONTENTS OF DRAWINGS

DRAWING NUMBER	SHEET
5027560	1
DATE / REV.	NEXT SHEET
2005-05-16 / A	2

Downloaded from www.Manualslib.com manuals search engine

THIS DRAWING CONTAINS CONFIDENTIAL INFORMATION AND REMAINS THE PROPERTY OF GETINGE DISINFECTION AB WITHOUT WHOSE PERMISSION IT MAY NOT BE COPIED, SHOWN OR HANDED TO A THIRD PART OR USED AT THE BASIS OF ALTERNATE DESIGNS

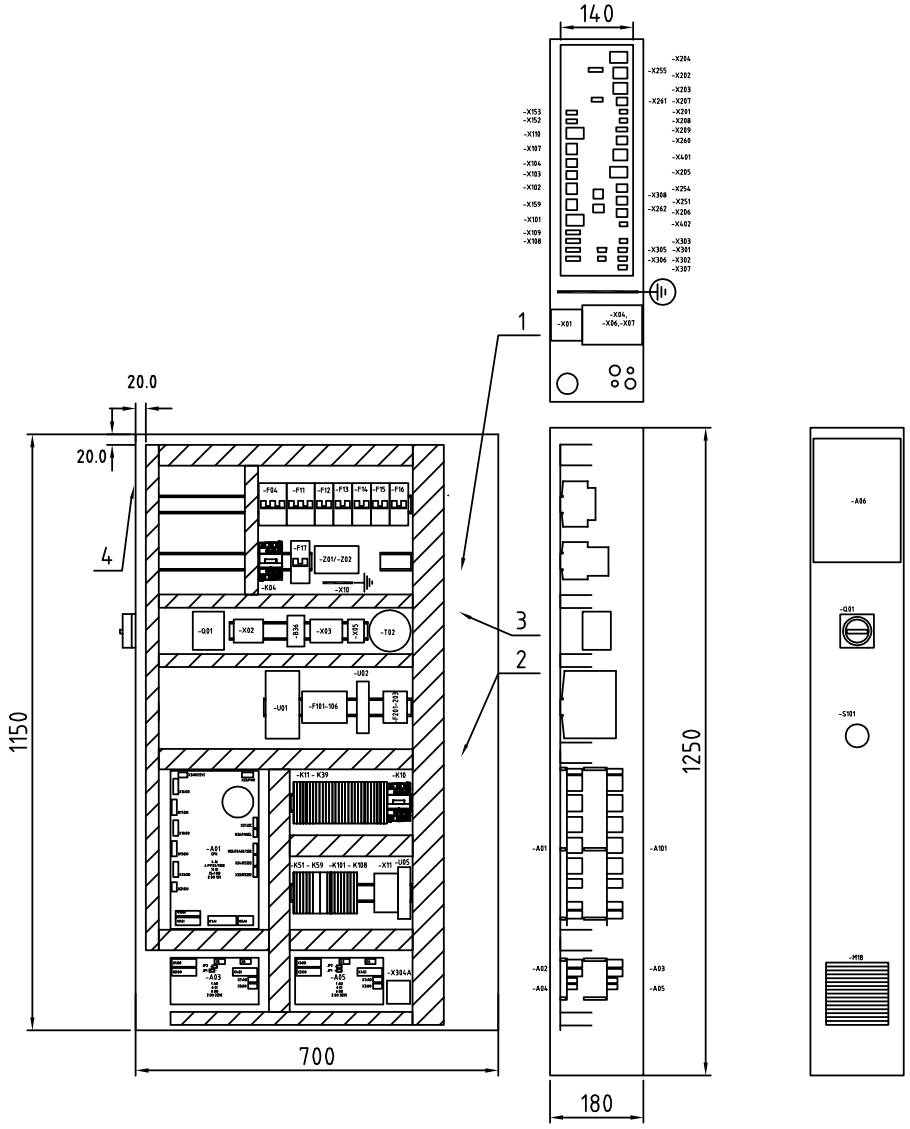

FOLLOWING COMPONENTS ARE OPTIONS:

-U02
-U05

WIRES USED IN MACHINE:

ACCORDING TO UL STYLE 1015, 600V 105C.
IF OTHER TYPE OF WIRE IS USED THIS IS SPECIFIED IN THE WIRING DIAGRAMS.

1) Connection point for power circuit.

2) Connection point for control voltage.

3) Label with fuse terminal description (5024156-00).

4) Label with manufacturers approval of electrical cabinet.

DRAWN BY	CHECKED BY (GETINGE)	APPROVAL (GETINGE)	DATE (APP.)	PROJECT NUMBER
MHn	JSn	JSn	2006-01-02	

GETINGE
GETINGE DISINFECTION
P.O. BOX 1505
SE 352 15 VAXJO
SWEDEN

UTENSIL WASHER TYPE 88-5 ST
ELECTRICAL CABINET LEFT SIDE
STEAM HEATED

DRAWING NUMBER	SHEET
5027560	2
DATE / REV.	NEXT SHEET
2005-05-16 / A	3

REV:	NOTE:	SIGN.	DATE:
A	PU06-0122	HS	070816

Downloaded from www.Manualslib.com manuals search engine

THIS DRAWING CONTAINS CONFIDENTIAL INFORMATION AND REMAINS THE PROPERTY OF GETINGE DISINFECTION AB WITHOUT WHOSE PERMISSION IT MAY NOT BE COPIED, SHOWN OR HANDED TO A THIRD PART OR USED AT THE BASIS OF ALTERNATE DESIGNS

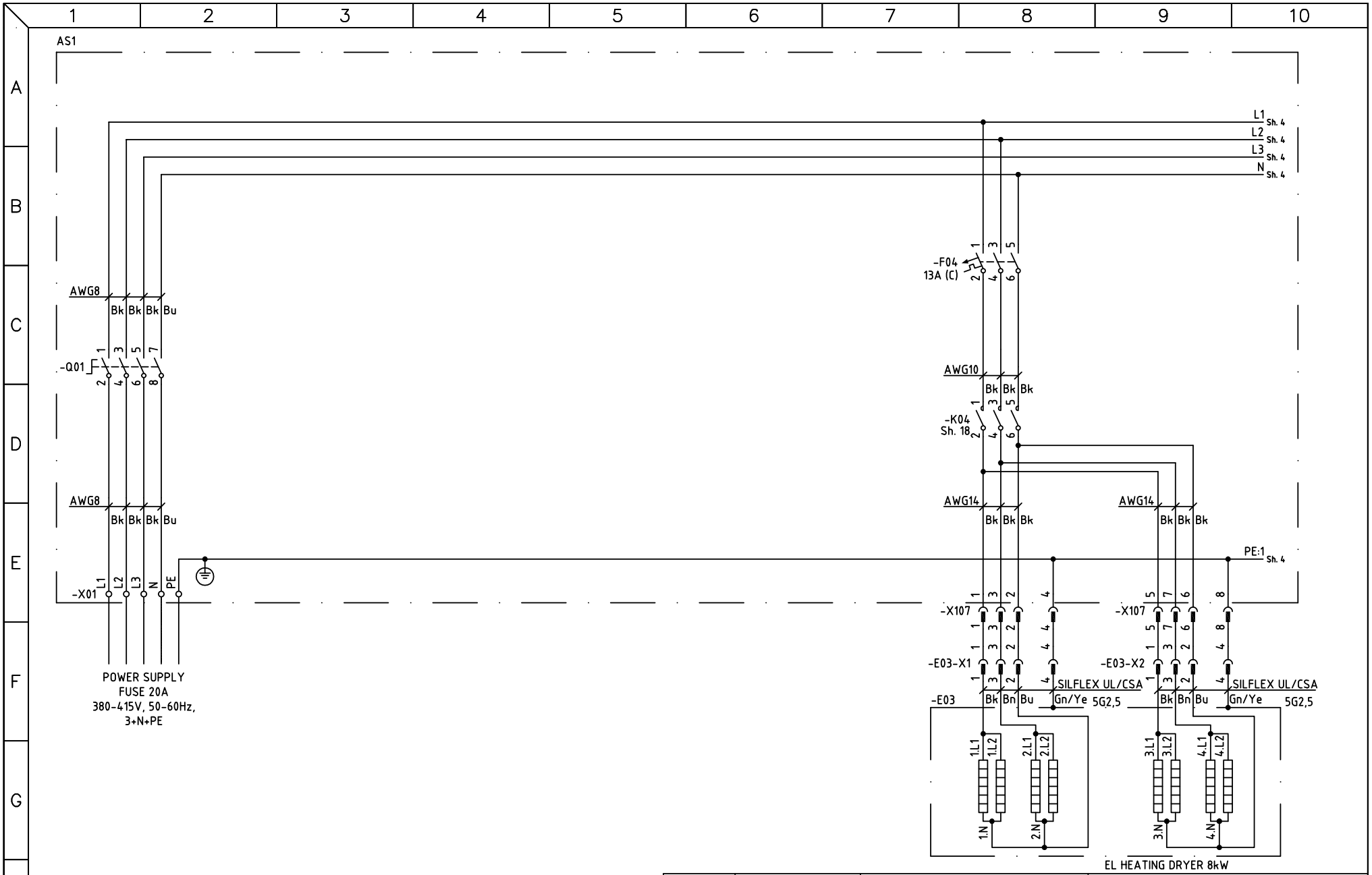

DRAWN BY	CHECKED BY (GETINGE)	APPROVAL (GETINGE)	DATE (APP.)	PROJECT NUMBER
MHn	JSn	JSn	2006-01-02	

GETINGE
GETINGE DISINFECTION
P.O. BOX 1505
SE 352 15 VAXJO
SWEDEN

UTENSIL WASHER TYPE 88-5 ST
CIRCUIT DIAGRAM, MON. SYSTEM
MAIN CIRCUIT

DRAWING NUMBER	SHEET
5027560	3
DATE / REV.	NEXT SHEET
2005-05-16 / A	4

REV:	NOTE:	SIGN.	DATE:
A	PU06-0122	HS	070816

Downloaded from www.Manualslib.com manuals search engine

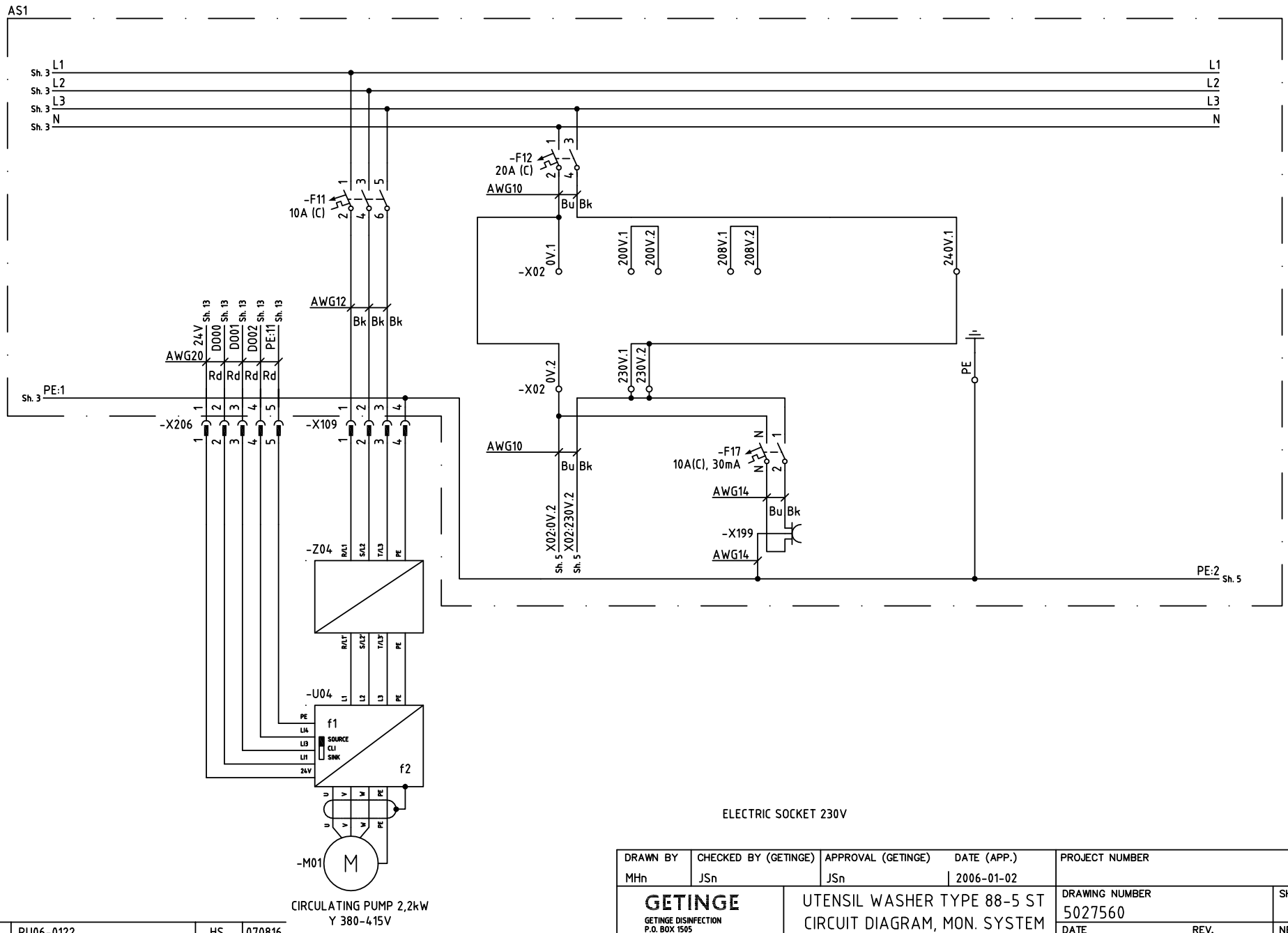

A	PU06-0122	HS	070816
REV:	NOTE:	SIGN.	DATE:

DRAWN BY	CHECKED BY (GETINGE)	APPROVAL (GETINGE)	DATE (APP.)	PROJECT NUMBER
MHn	JSn	JSn	2006-01-02	

GETINGE
GETINGE DISINFECTION
P.O. BOX 1505
SE 352 15 VAXJO
SWEDEN

UTENSIL WASHER TYPE 88-5 ST
CIRCUIT DIAGRAM, MON. SYSTEM
MAIN CIRCUIT

DRAWING NUMBER	SHEET
5027560	4
DATE / REV.	NEXT SHEET
2005-05-16 / A	5

Downloaded from www.Manualslib.com manuals search engine

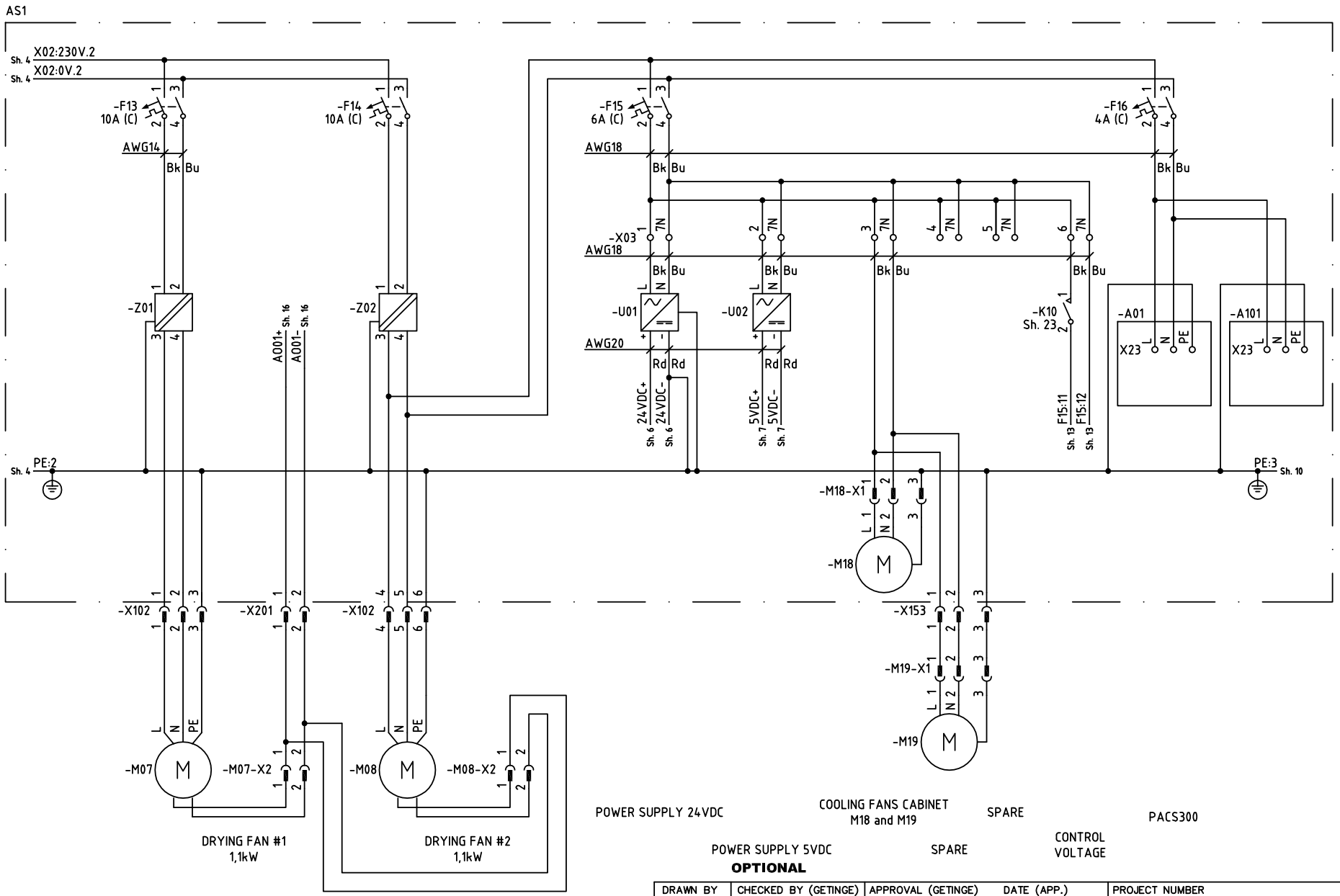

DRAWN BY	CHECKED BY (GETINGE)	APPROVAL (GETINGE)	DATE (APP.)	PROJECT NUMBER
MHn	JSn	JSn	2006-01-02	

GETINGE
GETINGE DISINFECTION
P.O. BOX 1505
SE 352 15 VAXJO
SWEDEN

UTENSIL WASHER TYPE 88-5 ST
CIRCUIT DIAGRAM, MON. SYSTEM
230VAC

DRAWING NUMBER	SHEET
5027560	5
DATE / REV.	NEXT SHEET
2005-05-16 / A	6

REV:	NOTE:	SIGN.	DATE:
A	PU06-0122	HS	070816

Downloaded from www.Manualslib.com manuals search engine

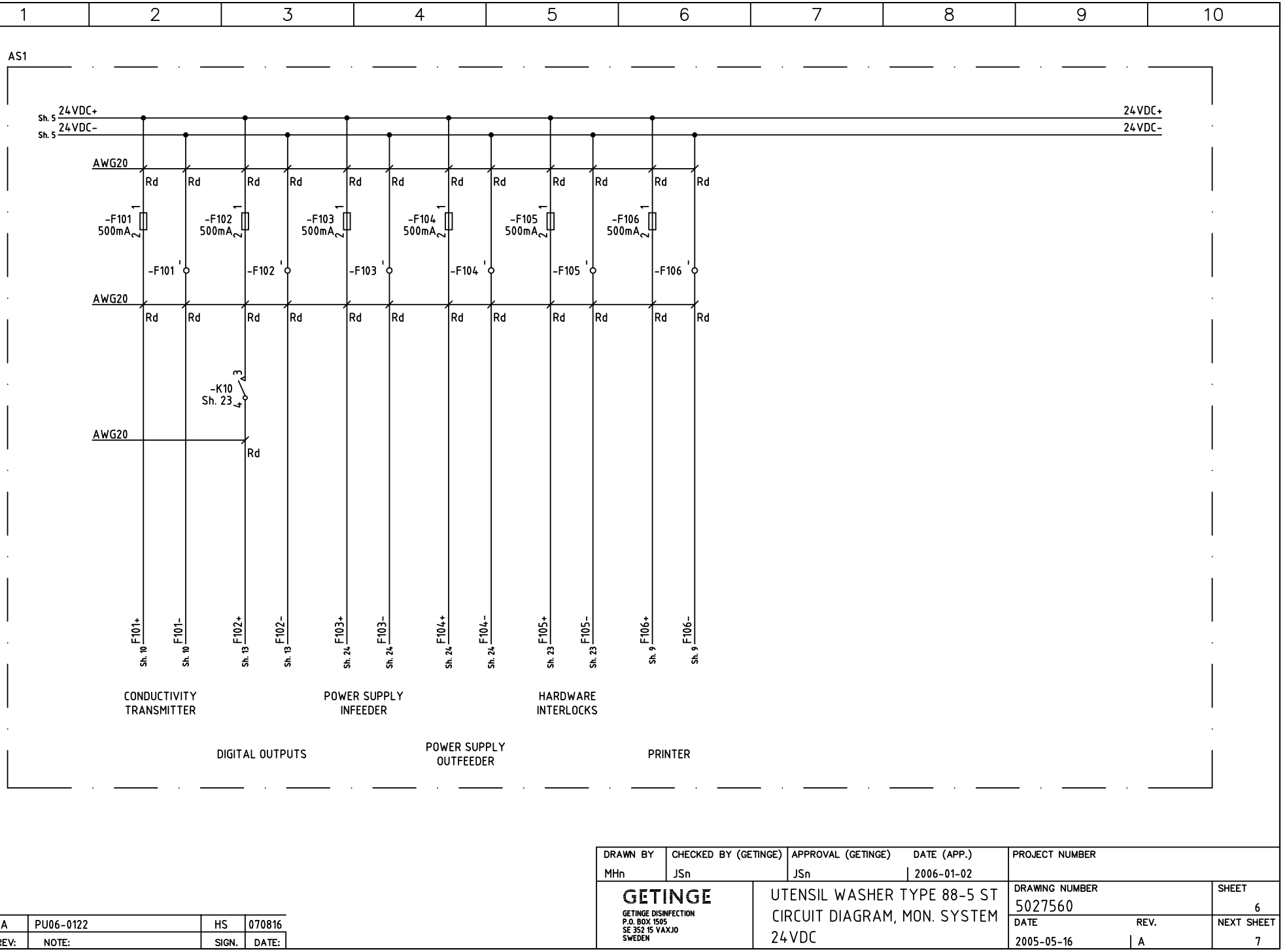

DRAWN BY	CHECKED BY (GETINGE)	APPROVAL (GETINGE)	DATE (APP.)	PROJECT NUMBER
MHn	JSn	JSn	2006-01-02	

GETINGE
GETINGE DISINFECTION
P.O. BOX 1505
SE 352 15 VAXJO
SWEDEN

UTENSIL WASHER TYPE 88-5 ST
CIRCUIT DIAGRAM, MON. SYSTEM
24VDC

DRAWING NUMBER	SHEET
5027560	6
DATE / REV.	NEXT SHEET
2005-05-16 / A	7

A	PU06-0122	HS	070816
REV:	NOTE:	SIGN.	DATE:

Downloaded from www.Manualslib.com manuals search engine

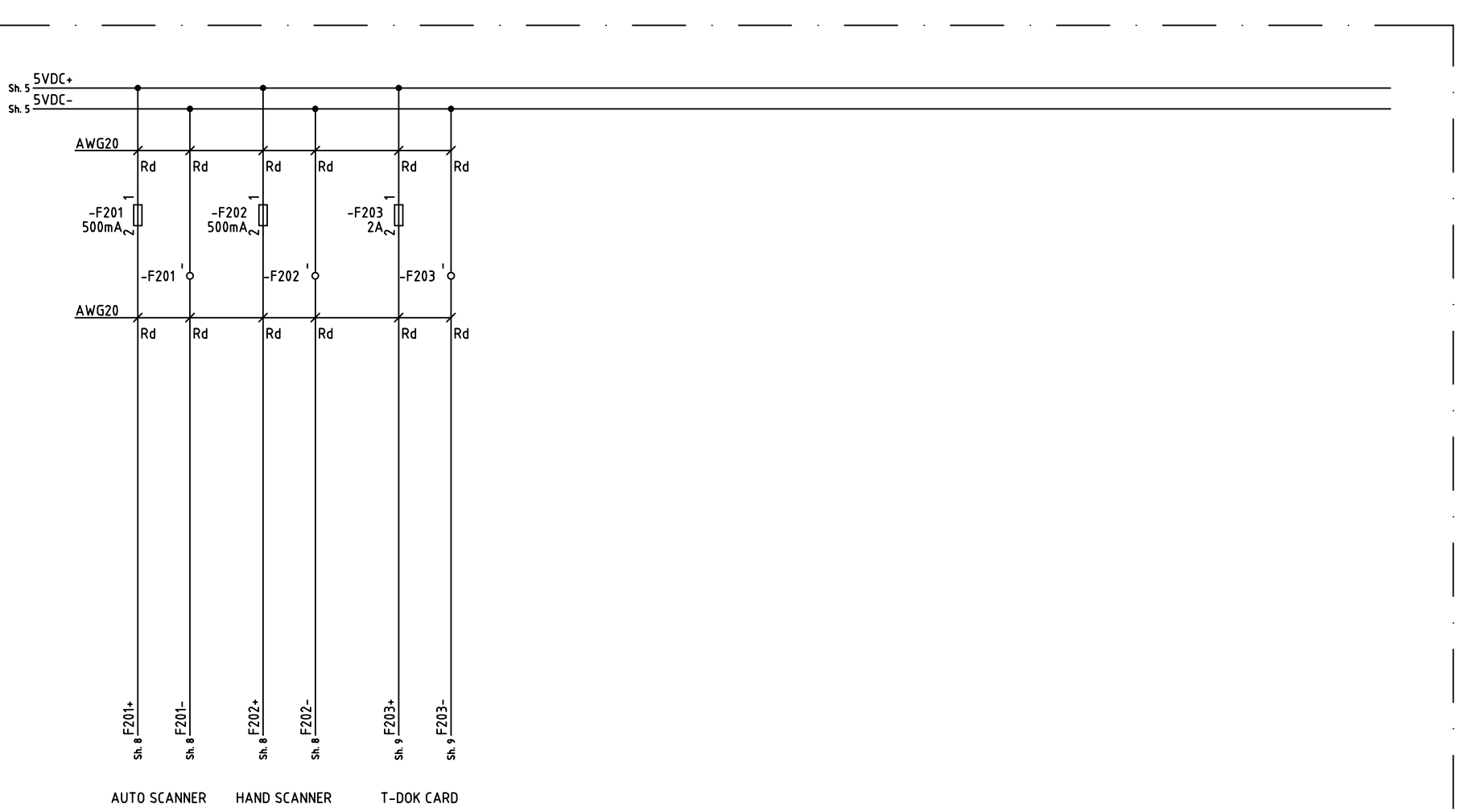

DRAWN BY	CHECKED BY (GETINGE)	APPROVAL (GETINGE)	DATE (APP.)	PROJECT NUMBER
MHn	JSn	JSn	2006-01-02	

GETINGE
GETINGE DISINFECTION
P.O. BOX 1505
SE 352 15 VAXJO
SWEDEN

UTENSIL WASHER TYPE 88-5 ST
CIRCUIT DIAGRAM, MON. SYSTEM
5VDC

DRAWING NUMBER	SHEET
5027560	7
DATE / REV.	NEXT SHEET
2005-05-16 / A	8

REV:	NOTE:	SIGN.	DATE:
A	PU06-0122	HS	070816

Downloaded from www.Manualslib.com manuals search engine

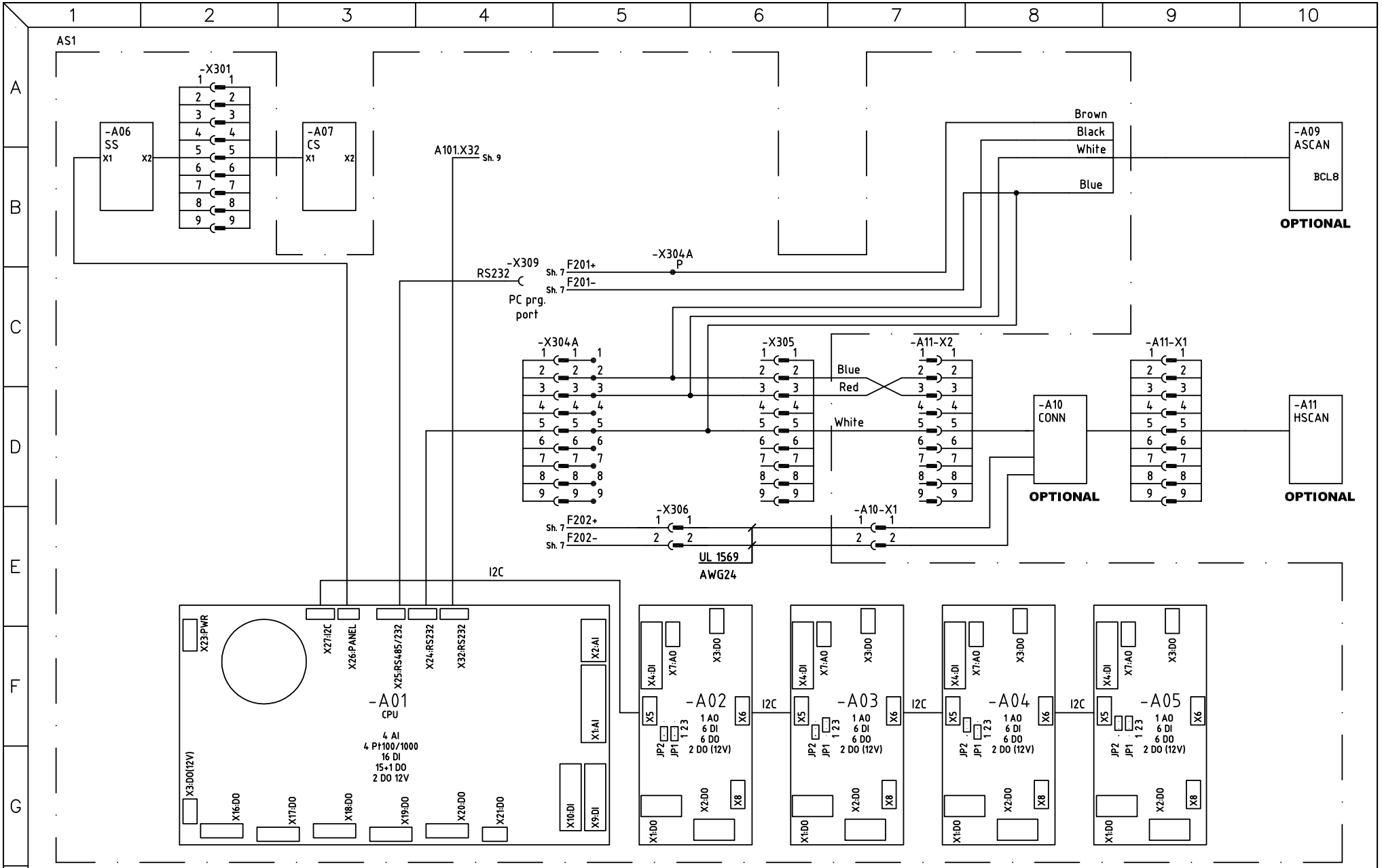

DRAWN BY	CHECKED BY (GETINGE)	APPROVAL (GETINGE)	DATE (APP.)	PROJECT NUMBER
MHn	JSn	JSn	2006-01-02	

GETINGE
GETINGE DISINFECTION
P.O. BOX 1505
SE 352 15 VAXJO
SWEDEN

UTENSIL WASHER TYPE 88-5 ST
CIRCUIT DIAGRAM, MON. SYSTEM
PACS300

DRAWING NUMBER	SHEET
5027560	8
DATE / REV.	NEXT SHEET
2005-05-16 / A	9

A	PU06-0122	HS	070816
REV:	NOTE:	SIGN.	DATE:

Downloaded from www.Manualslib.com manuals search engine

THIS DRAWING CONTAINS CONFIDENTIAL INFORMATION AND REMAINS THE PROPERTY OF GETINGE DISINFECTION AB WITHOUT WHOSE PERMISSION IT MAY NOT BE COPIED, SHOWN OR HANDED TO A THIRD PART OR USED AT THE BASIS OF ALTERNATE DESIGNS

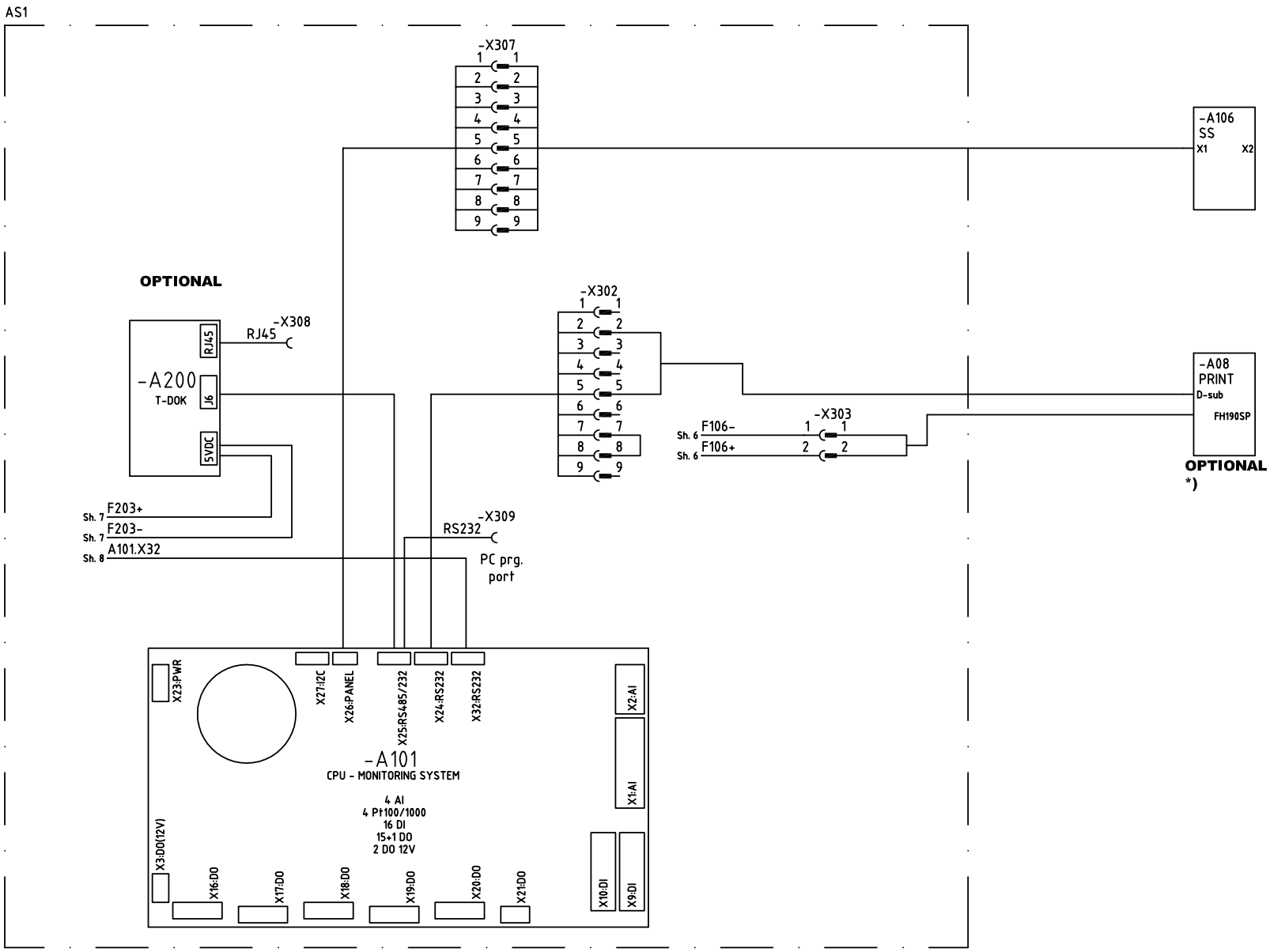

DRAWN BY	CHECKED BY (GETINGE)	APPROVAL (GETINGE)	DATE (APP.)	PROJECT NUMBER
MHn	JSn	JSn	2006-01-02	

GETINGE
GETINGE DISINFECTION
P.O. BOX 1505
SE 352 15 VAXJO
SWEDEN

UTENSIL WASHER TYPE 88-5 ST
CIRCUIT DIAGRAM, MON. SYSTEM
PACS300

DRAWING NUMBER	SHEET
5027560	9
DATE / REV.	NEXT SHEET
2005-05-16 / A	10

REV:	NOTE:	SIGN.	DATE:
A	PU06-0122	HS	070816

Downloaded from www.Manualslib.com manuals search engine

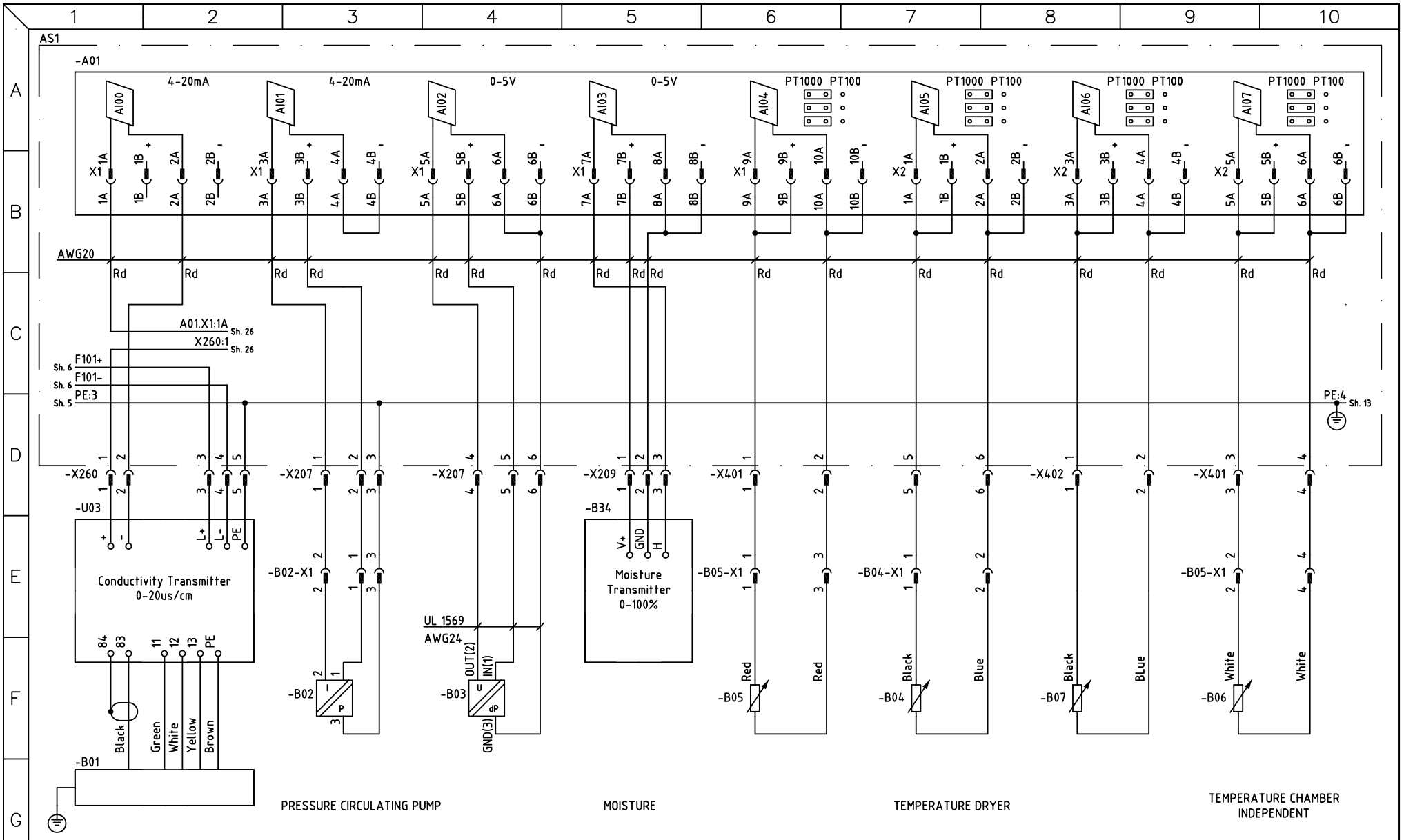

DRAWN BY	CHECKED BY (GETINGE)	APPROVAL (GETINGE)	DATE (APP.)	PROJECT NUMBER
MHn	JSn	JSn	2006-01-02	

GETINGE
GETINGE DISINFECTION
P.O. BOX 1505
SE 352 15 VAXJO
SWEDEN

UTENSIL WASHER TYPE 88-5 ST
CIRCUIT DIAGRAM, MON. SYSTEM
AI00-AI07

DRAWING NUMBER	SHEET
5027560	10
DATE / REV.	NEXT SHEET
2005-05-16 / A	11

REV:	NOTE:	SIGN.	DATE:
A	PU06-0122	HS	070816

Downloaded from www.Manualslib.com manuals search engine

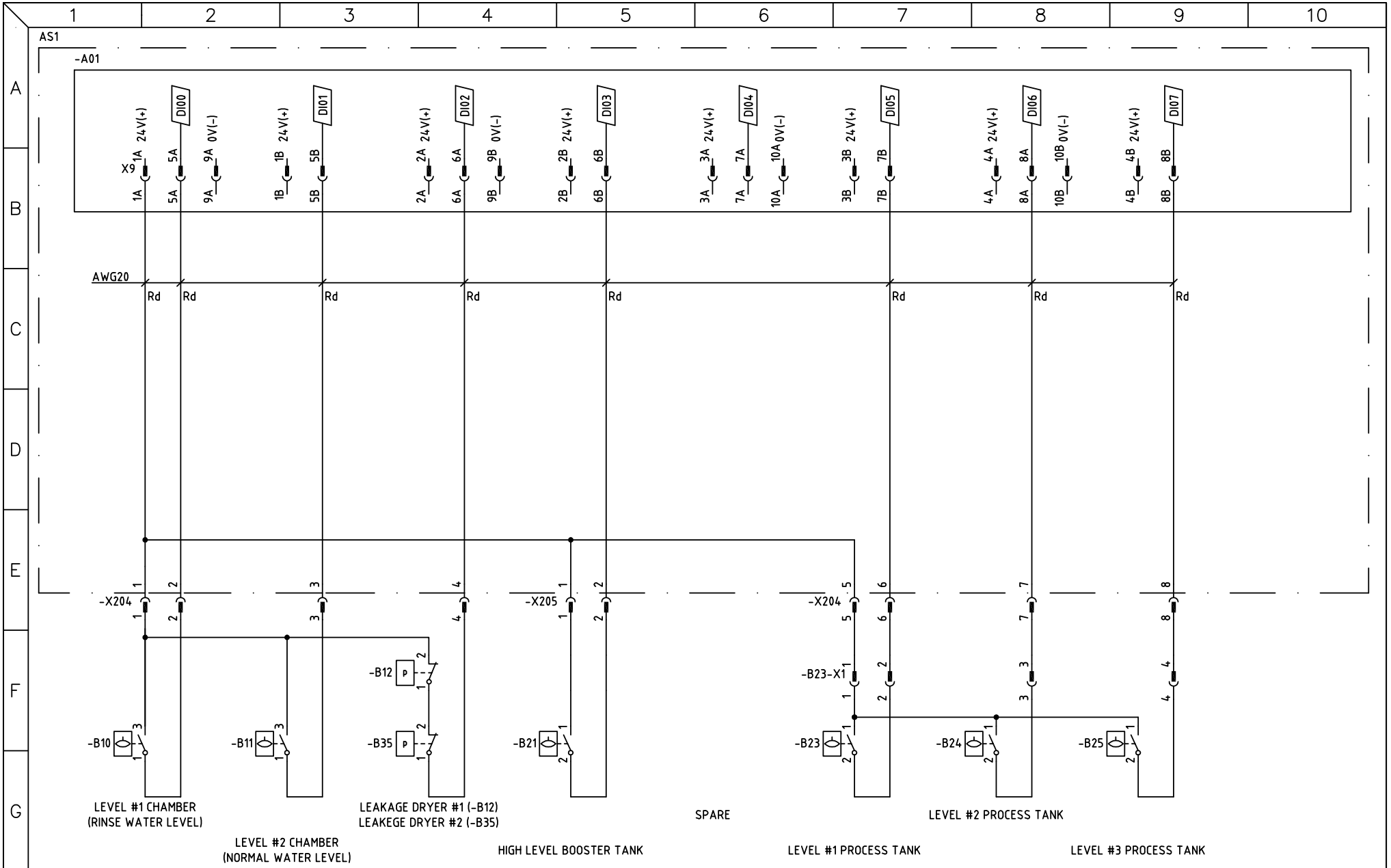

DRAWN BY	CHECKED BY (GETINGE)	APPROVAL (GETINGE)	DATE (APP.)	PROJECT NUMBER
MHn	JSn	JSn	2006-01-02	

GETINGE
GETINGE DISINFECTION
P.O. BOX 1505
SE 352 15 VAXJO
SWEDEN

UTENSIL WASHER TYPE 88-5 ST
CIRCUIT DIAGRAM, MON. SYSTEM
DI00-DI07

DRAWING NUMBER	SHEET
5027560	11
DATE / REV.	NEXT SHEET
2005-05-16 / A	12

A	PU06-0122	HS	070816
REV:	NOTE:	SIGN.	DATE:

Downloaded from www.Manualslib.com manuals search engine

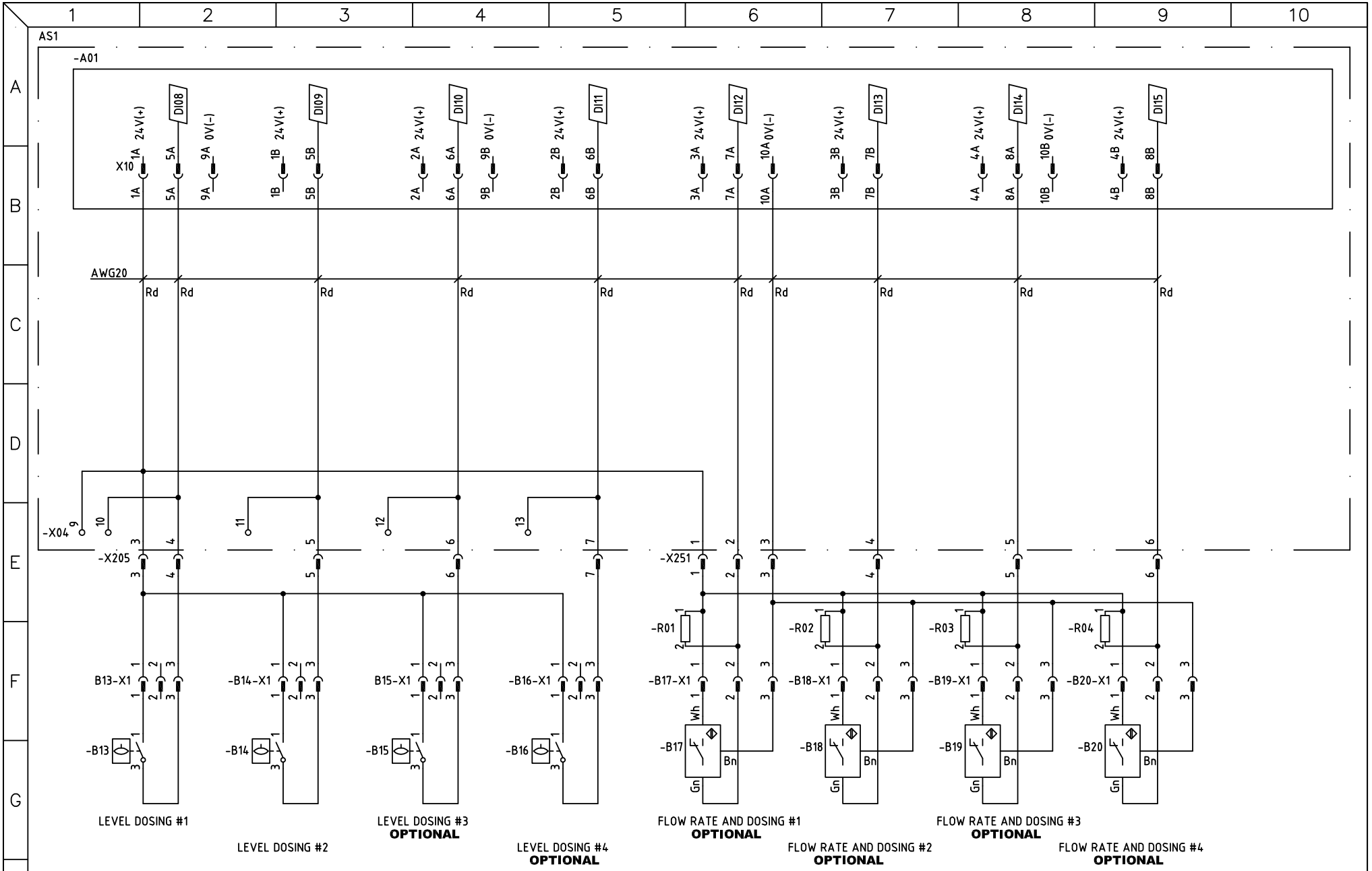

DRAWN BY	CHECKED BY (GETINGE)	APPROVAL (GETINGE)	DATE (APP.)	PROJECT NUMBER
MHn	JSn	JSn	2006-01-02	

GETINGE
GETINGE DISINFECTION
P.O. BOX 1505
SE 352 15 VAXJO
SWEDEN

UTENSIL WASHER TYPE 88-5 ST
CIRCUIT DIAGRAM, MON. SYSTEM
DI08-DI15

DRAWING NUMBER	SHEET
5027560	12
DATE / REV.	NEXT SHEET
2005-05-16 / A	13

A	PU06-0122	HS	070816
REV:	NOTE:	SIGN.	DATE:

Downloaded from www.Manualslib.com manuals search engine

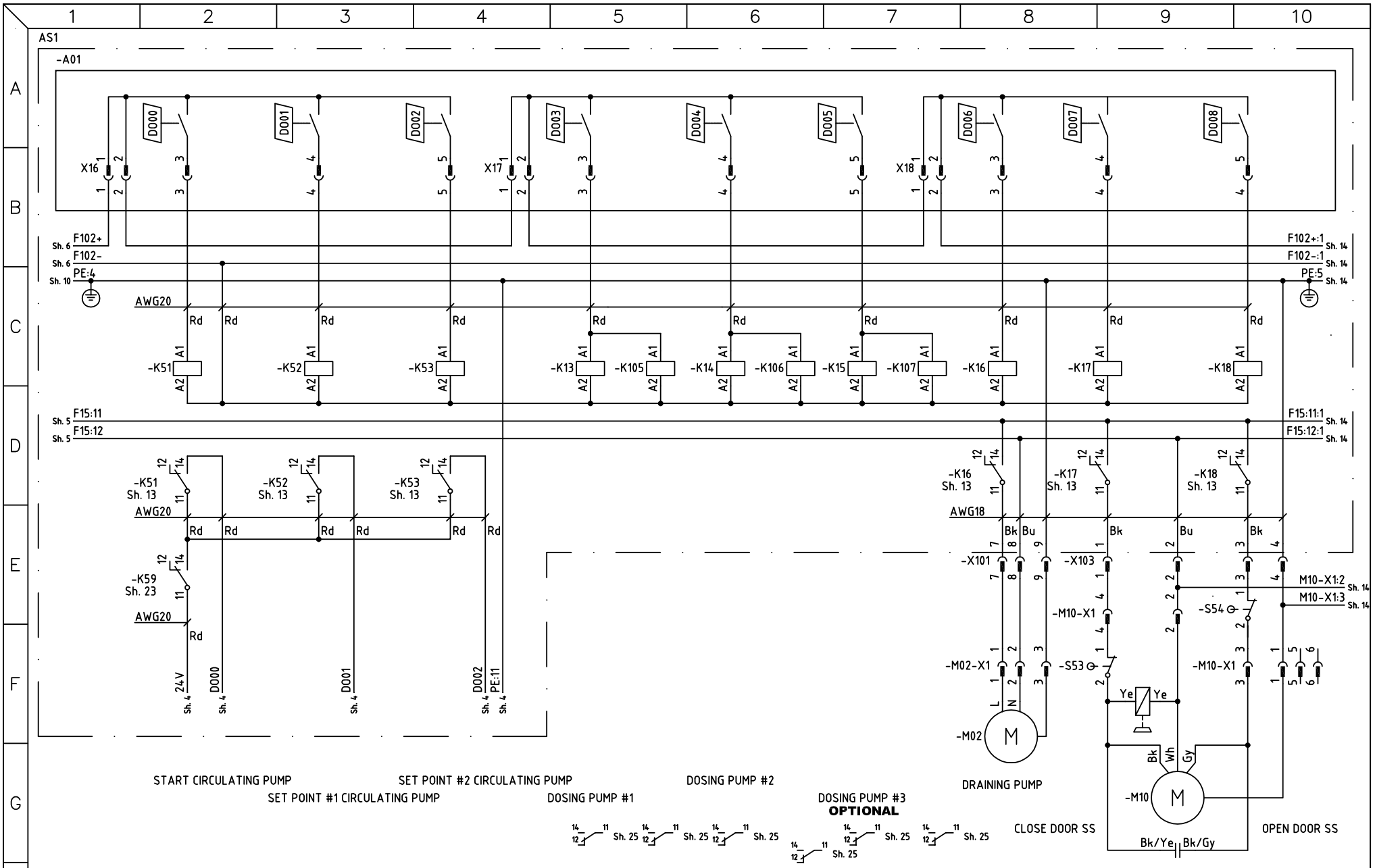

DRAWN BY	CHECKED BY (GETINGE)	APPROVAL (GETINGE)	DATE (APP.)	PROJECT NUMBER
MHn	JSn	JSn	2006-01-02	

GETINGE
GETINGE DISINFECTION
P.O. BOX 1505
SE 352 15 VAXJO
SWEDEN

UTENSIL WASHER TYPE 88-5 ST
CIRCUIT DIAGRAM, MON. SYSTEM
D000-D008

DRAWING NUMBER	SHEET
5027560	13
DATE / REV.	NEXT SHEET
2005-05-16 / A	14

A	PU06-0122	HS	070816
REV:	NOTE:	SIGN.	DATE:

Downloaded from www.Manualslib.com manuals search engine

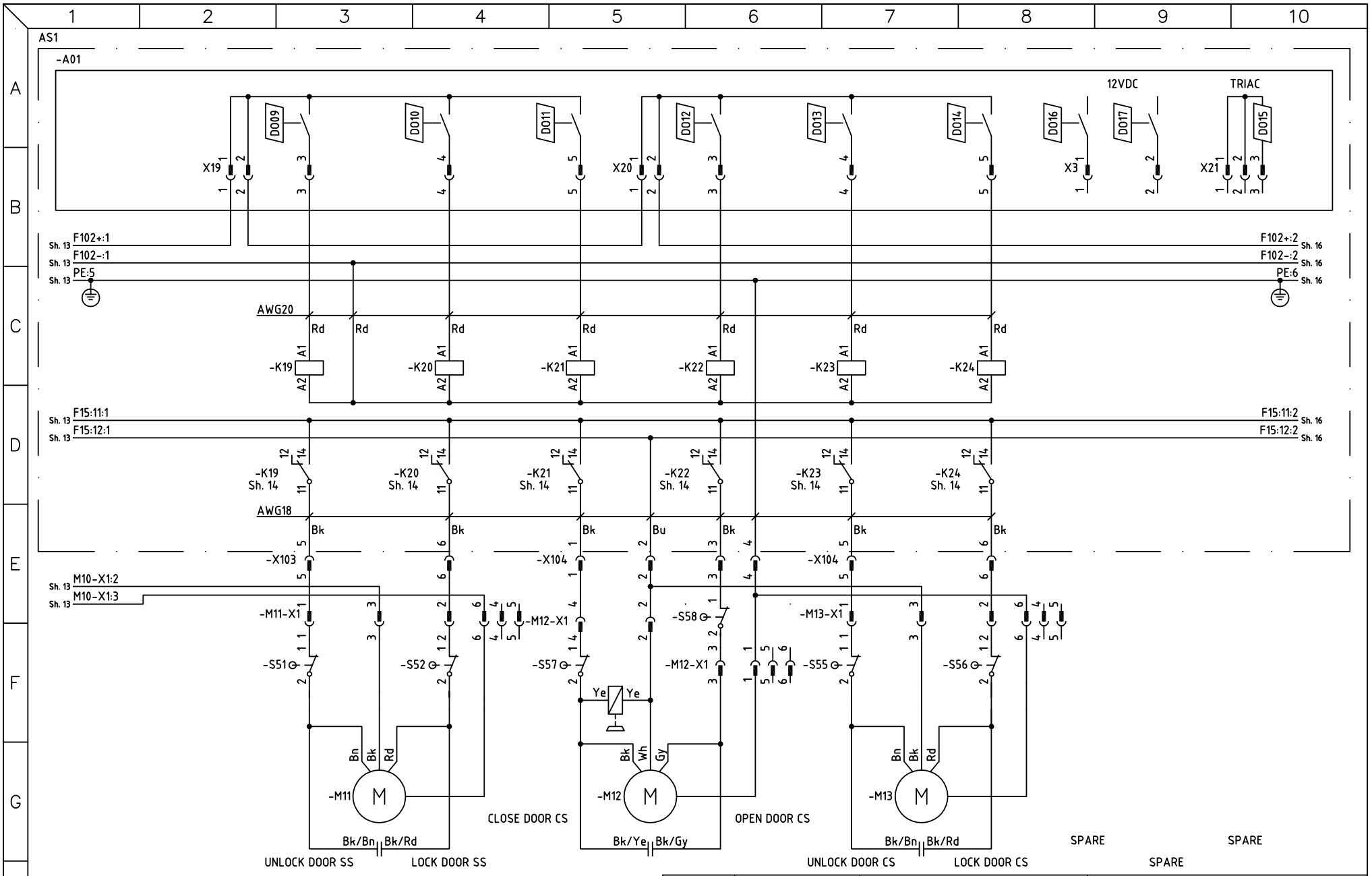

DRAWN BY	CHECKED BY (GETINGE)	APPROVAL (GETINGE)	DATE (APP.)	PROJECT NUMBER
MHn	JSn	JSn	2006-01-02	

GETINGE
GETINGE DISINFECTION
P.O. BOX 1505
SE 352 15 VAXJO
SWEDEN

UTENSIL WASHER TYPE 88-5 ST
CIRCUIT DIAGRAM, MON. SYSTEM
D009-D017

DRAWING NUMBER	SHEET
5027560	14
DATE / REV.	NEXT SHEET
2005-05-16 / A	15

A	PU06-0122	HS	070816
REV:	NOTE:	SIGN.	DATE:

Downloaded from www.Manualslib.com manuals search engine

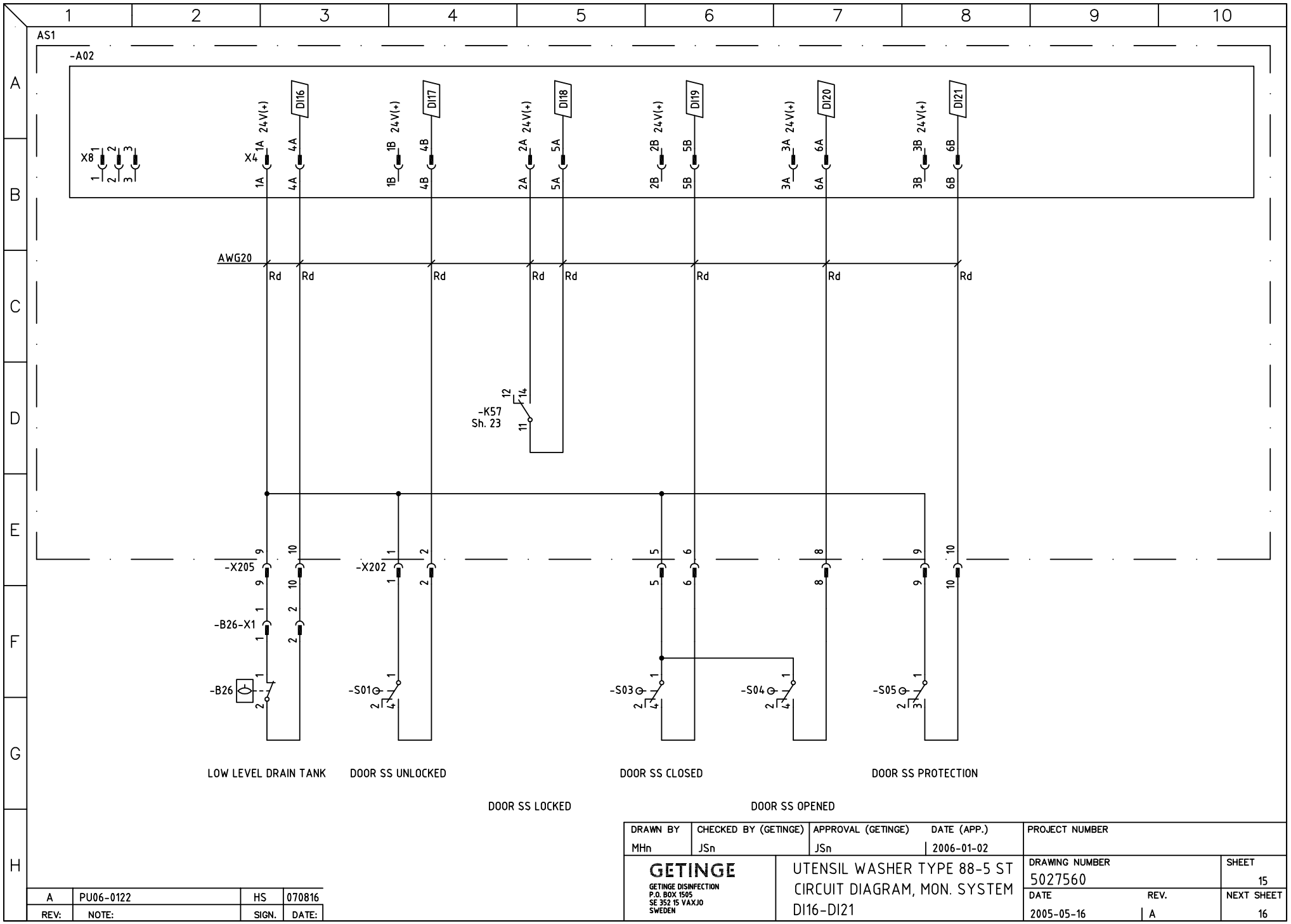

DRAWN BY	CHECKED BY (GETINGE)	APPROVAL (GETINGE)	DATE (APP.)	PROJECT NUMBER
MHn	JSn	JSn	2006-01-02	

GETINGE
GETINGE DISINFECTION
P.O. BOX 1505
SE 352 15 VAXJO
SWEDEN

UTENSIL WASHER TYPE 88-5 ST
CIRCUIT DIAGRAM, MON. SYSTEM
DI16-DI21

DRAWING NUMBER	SHEET
5027560	15
DATE / REV.	NEXT SHEET
2005-05-16 / A	16

REV:	NOTE:	SIGN.	DATE:
A	PU06-0122	HS	070816

Downloaded from www.Manualslib.com manuals search engine

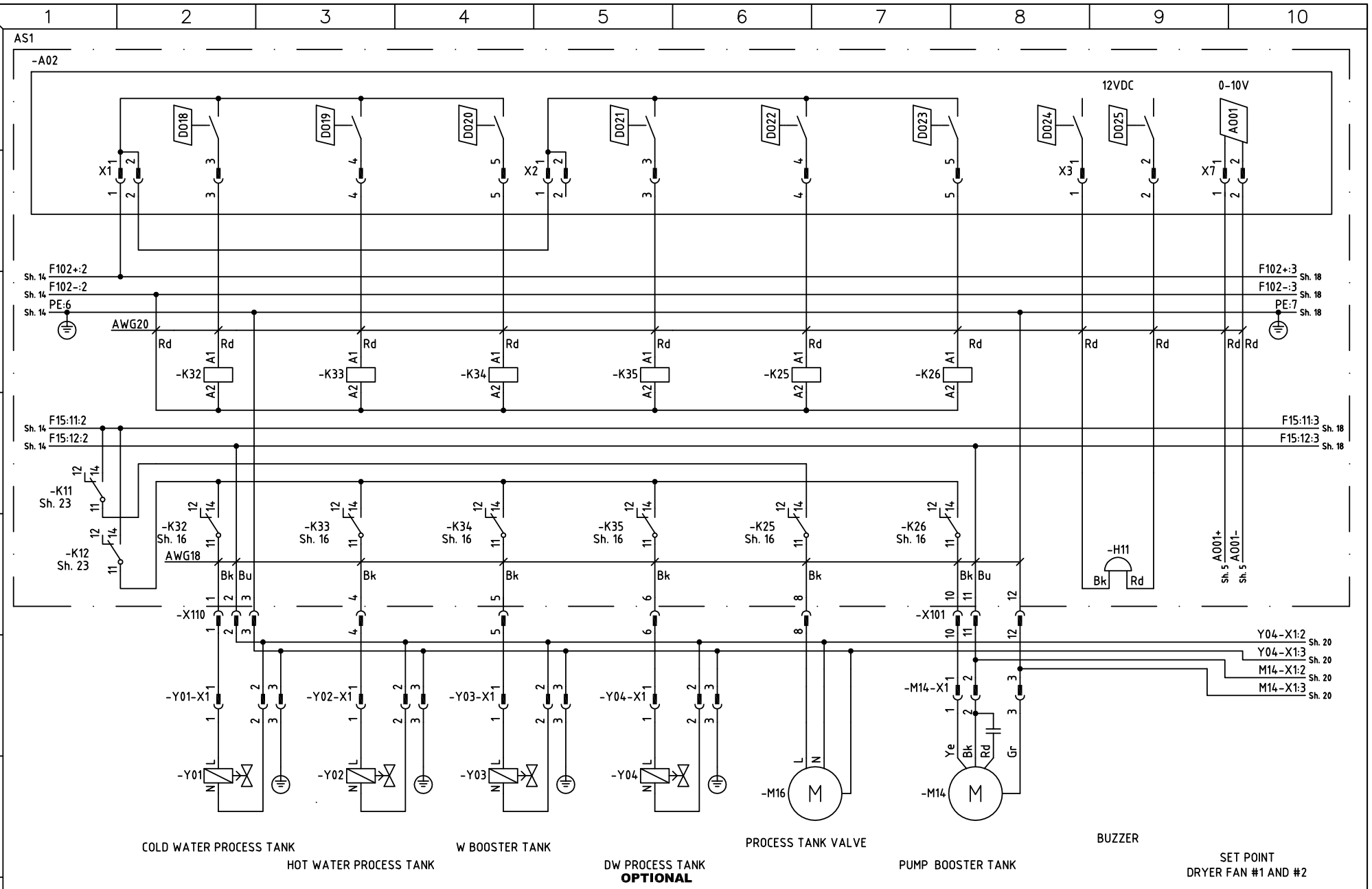

DRAWN BY	CHECKED BY (GETINGE)	APPROVAL (GETINGE)	DATE (APP.)	PROJECT NUMBER
MHn	JSn	JSn	2006-01-02	

GETINGE
GETINGE DISINFECTION
P.O. BOX 1505
SE 352 15 VAXJO
SWEDEN

UTENSIL WASHER TYPE 88-5 ST
CIRCUIT DIAGRAM, MON. SYSTEM
D018-D025, A001

DRAWING NUMBER	SHEET
5027560	16
DATE / REV.	NEXT SHEET
2005-05-16 / A	17

REV:	NOTE:	SIGN.	DATE:
A	PU06-0122	HS	070816

Downloaded from www.Manualslib.com manuals search engine

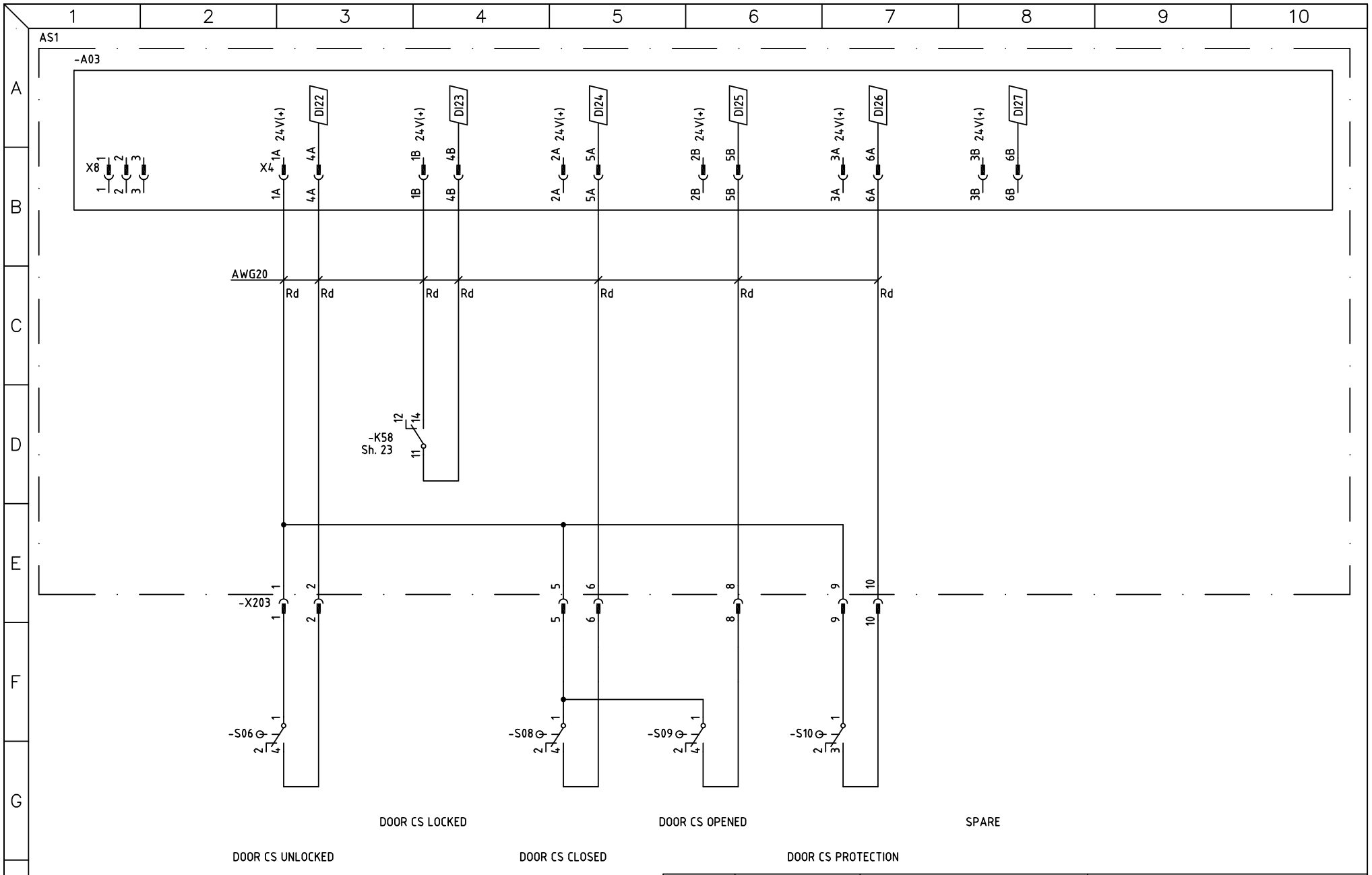

DRAWN BY	CHECKED BY (GETINGE)	APPROVAL (GETINGE)	DATE (APP.)	PROJECT NUMBER
MHn	JSn	JSn	2006-01-02	

GETINGE
GETINGE DISINFECTION
P.O. BOX 1505
SE 352 15 VAXJO
SWEDEN

UTENSIL WASHER TYPE 88-5 ST
CIRCUIT DIAGRAM, MON. SYSTEM
DI22-DI27

DRAWING NUMBER	SHEET
5027560	17
DATE / REV.	NEXT SHEET
2005-05-16 / A	18

REV:	NOTE:	SIGN.	DATE:
A	PU06-0122	HS	070816

Downloaded from www.Manualslib.com manuals search engine

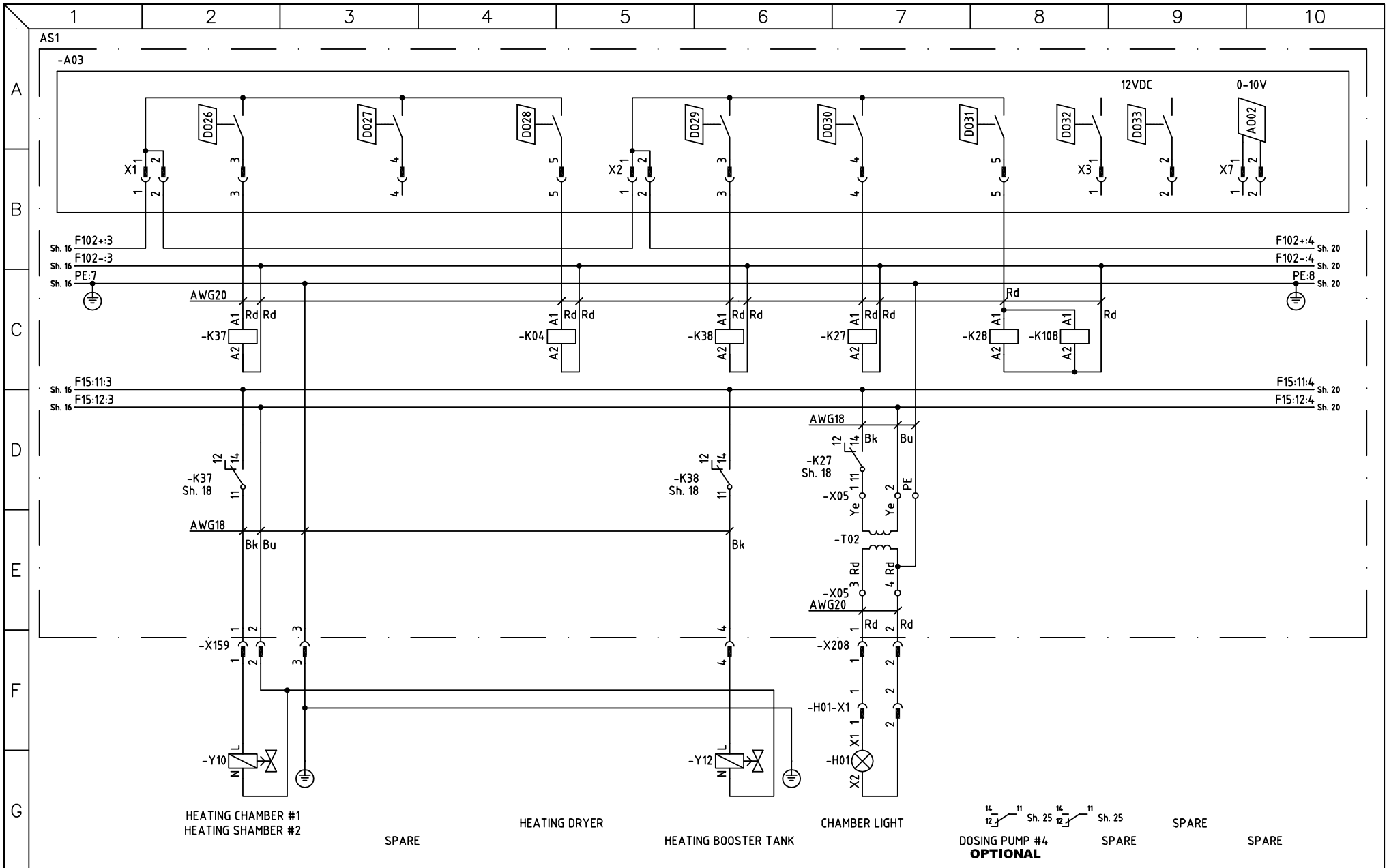

DRAWN BY	CHECKED BY (GETINGE)	APPROVAL (GETINGE)	DATE (APP.)	PROJECT NUMBER
MHn	JSn	JSn	2006-01-02	

GETINGE
GETINGE DISINFECTION
P.O. BOX 1505
SE 352 15 VAXJO
SWEDEN

UTENSIL WASHER TYPE 88-5 ST
CIRCUIT DIAGRAM, MON. SYSTEM
D026-D033, A002

DRAWING NUMBER	SHEET
5027560	18
DATE / REV.	NEXT SHEET
2005-05-16 / A	19

REV:	NOTE:	SIGN.	DATE:
A	PU06-0122	HS	070816

Downloaded from www.Manualslib.com manuals search engine

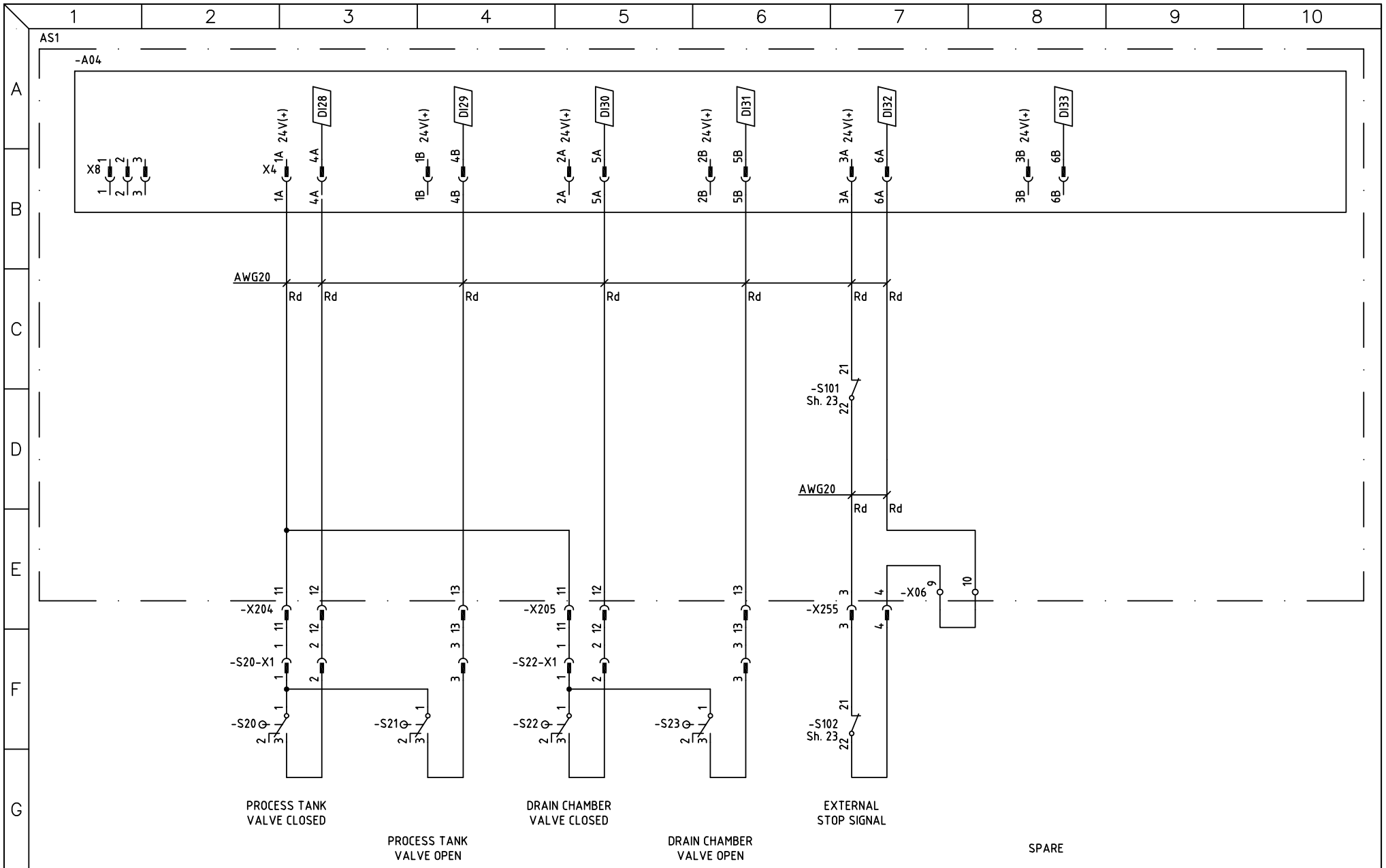

DRAWN BY	CHECKED BY (GETINGE)	APPROVAL (GETINGE)	DATE (APP.)	PROJECT NUMBER
MHn	JSn	JSn	2006-01-02	

GETINGE
GETINGE DISINFECTION
P.O. BOX 1505
SE 352 15 VAXJO
SWEDEN

UTENSIL WASHER TYPE 88-5 ST
CIRCUIT DIAGRAM, MON. SYSTEM
DI28-DI33

DRAWING NUMBER	SHEET
5027560	19
DATE / REV.	NEXT SHEET
2005-05-16 / A	20

A	PU06-0122	HS	070816
REV:	NOTE:	SIGN.	DATE:

Downloaded from www.Manualslib.com manuals search engine

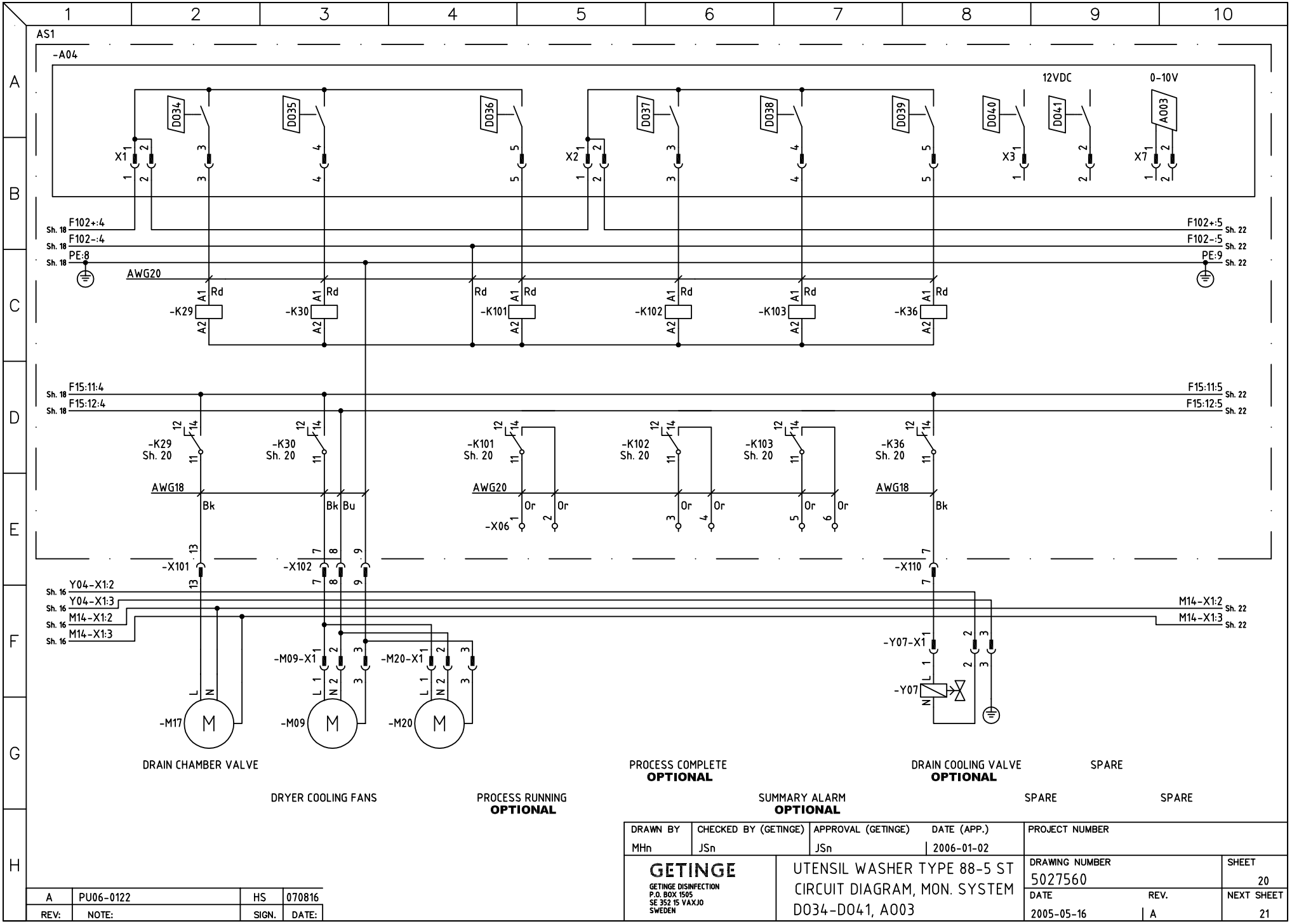

DRAWN BY	CHECKED BY (GETINGE)	APPROVAL (GETINGE)	DATE (APP.)	PROJECT NUMBER
MHn	JSn	JSn	2006-01-02	

GETINGE
GETINGE DISINFECTION
P.O. BOX 1505
SE 352 15 VAXJO
SWEDEN

UTENSIL WASHER TYPE 88-5 ST
CIRCUIT DIAGRAM, MON. SYSTEM
D034-D041, A003

DRAWING NUMBER	SHEET
5027560	20
DATE / REV.	NEXT SHEET
2005-05-16 / A	21

REV:	NOTE:	SIGN.	DATE:
A	PU06-0122	HS	070816

Downloaded from www.Manualslib.com manuals search engine

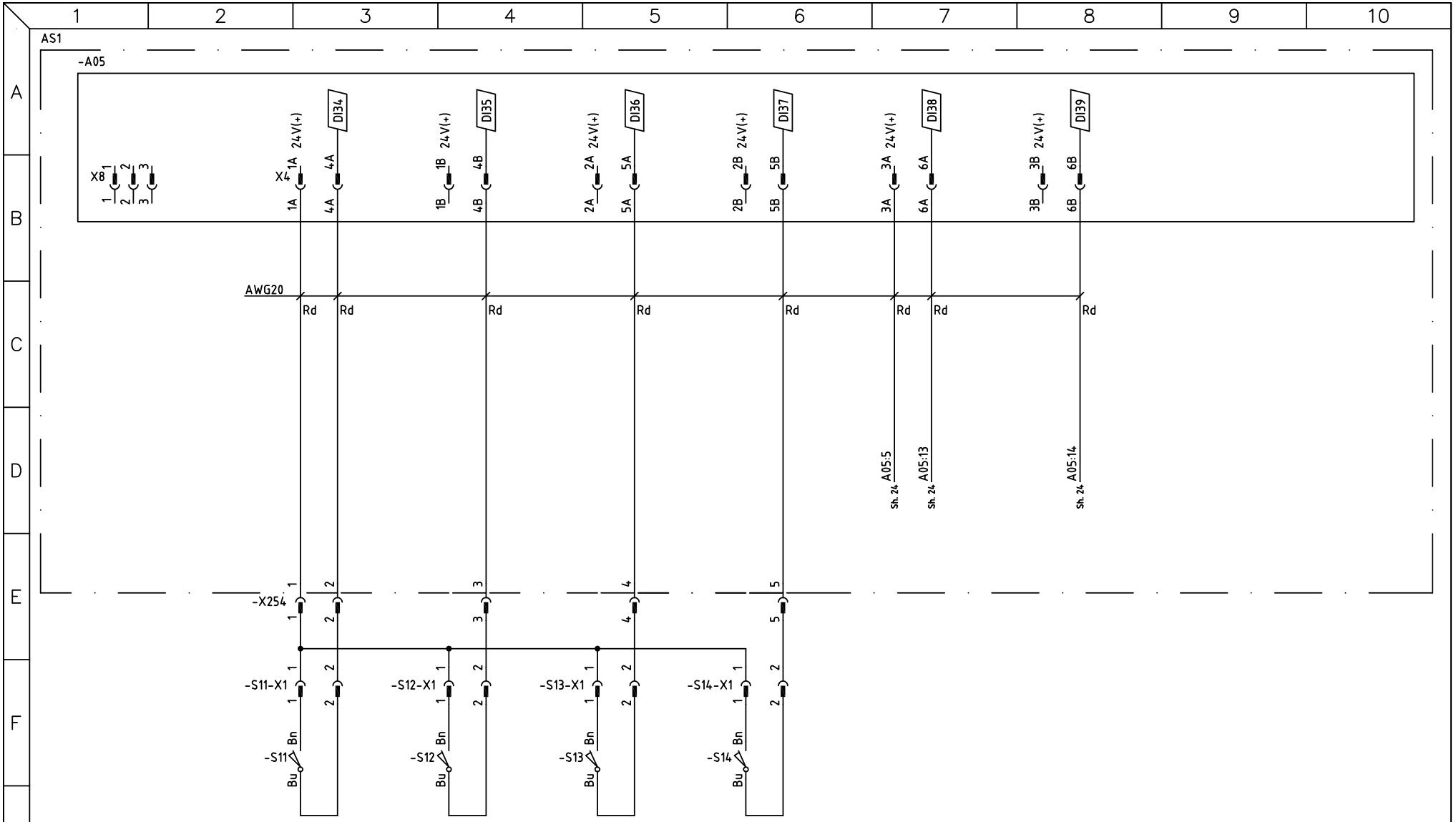

DRAWN BY	CHECKED BY (GETINGE)	APPROVAL (GETINGE)	DATE (APP.)	PROJECT NUMBER
MHn	JSn	JSn	2006-01-02	

GETINGE
GETINGE DISINFECTION
P.O. BOX 1505
SE 352 15 VAXJO
SWEDEN

UTENSIL WASHER TYPE 88-5 ST
CIRCUIT DIAGRAM, MON. SYSTEM
DI34-DI39

DRAWING NUMBER	SHEET
5027560	21
DATE / REV.	NEXT SHEET
2005-05-16 / A	22

REV:	NOTE:	SIGN.	DATE:
A	PU06-0122	HS	070816

Downloaded from www.Manualslib.com manuals search engine

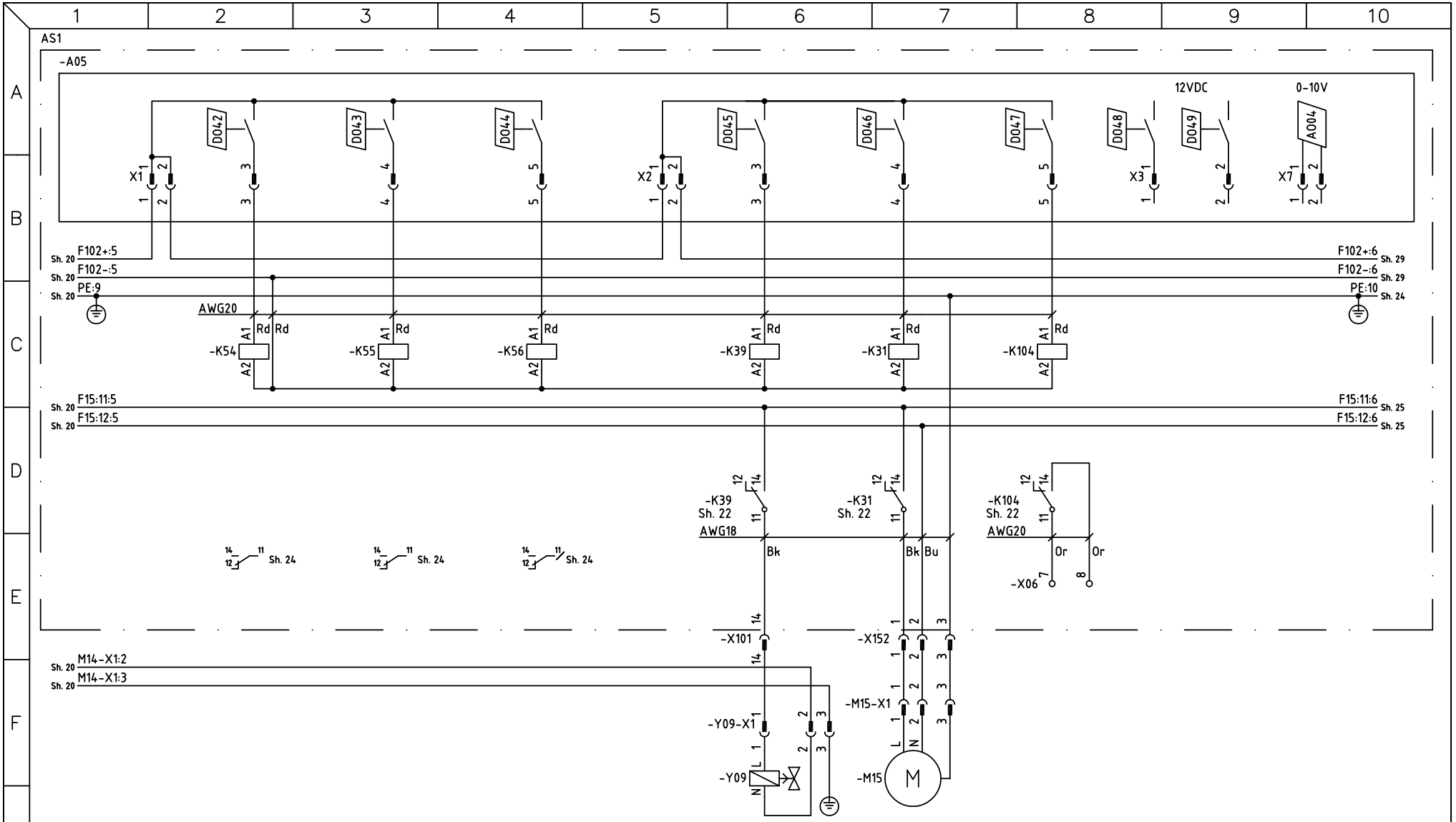

DRAWN BY	CHECKED BY (GETINGE)	APPROVAL (GETINGE)	DATE (APP.)	PROJECT NUMBER
MHn	JSn	JSn	2006-01-02	

GETINGE
GETINGE DISINFECTION
P.O. BOX 1505
SE 352 15 VAXJO
SWEDEN

UTENSIL WASHER TYPE 88-5 ST
CIRCUIT DIAGRAM, MON. SYSTEM
D042-D049, A004

DRAWING NUMBER	SHEET
5027560	22
DATE / REV.	NEXT SHEET
2005-05-16 / A	23

REV:	NOTE:	SIGN.	DATE:
A	PU06-0122	HS	070816

Downloaded from www.Manualslib.com manuals search engine

THIS DRAWING CONTAINS CONFIDENTIAL INFORMATION AND REMAINS THE PROPERTY OF GETINGE DISINFECTION AB WITHOUT WHOSE PERMISSION IT MAY NOT BE COPIED, SHOWN OR HANDED TO A THIRD PART OR USED AT THE BASIS OF ALTERNATE DESIGNS

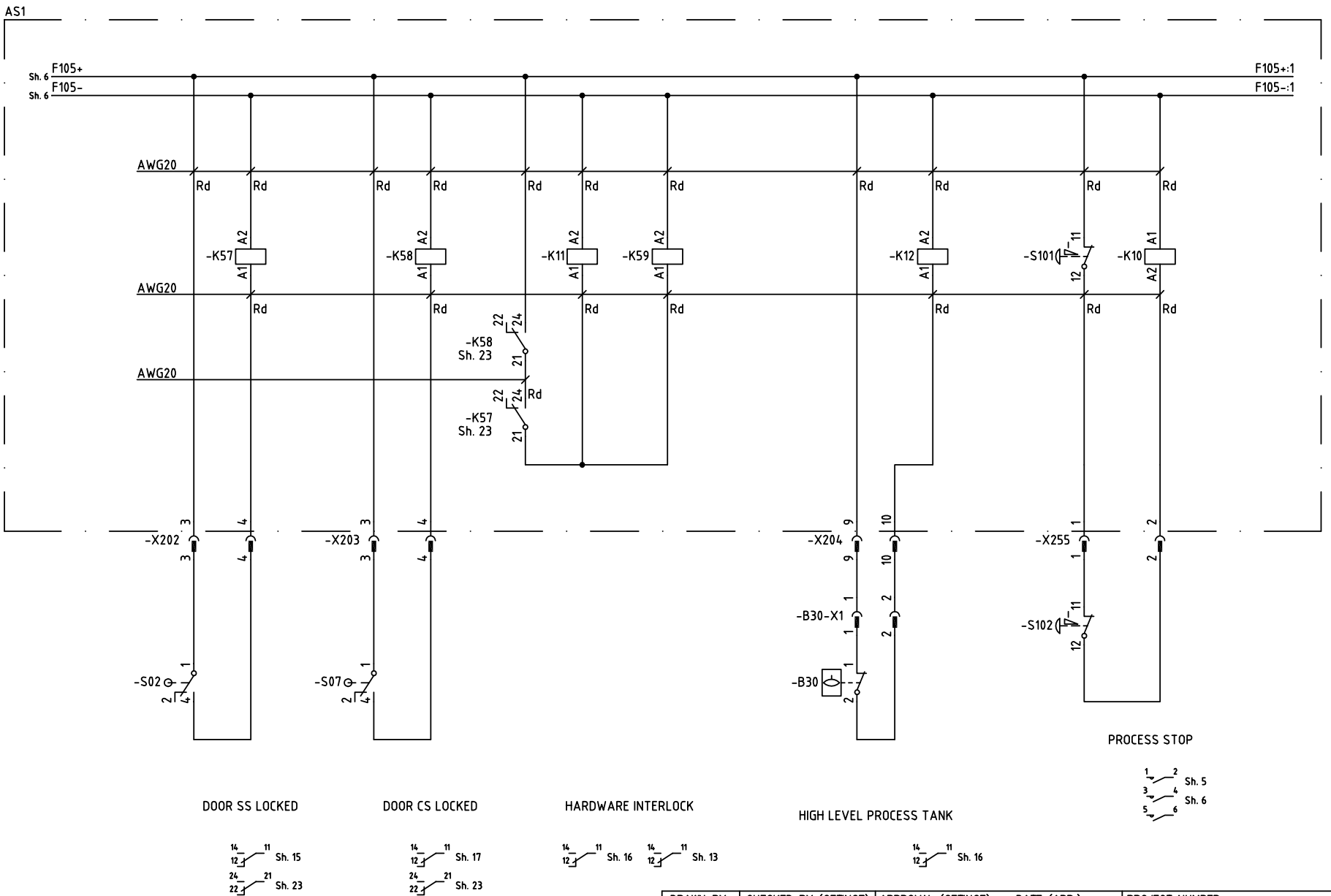

DRAWN BY	CHECKED BY (GETINGE)	APPROVAL (GETINGE)	DATE (APP.)	PROJECT NUMBER
MHn	JSn	JSn	2006-01-02	

GETINGE
GETINGE DISINFECTION
P.O. BOX 1505
SE 352 15 VÄXJÖ
SWEDEN

UTENSIL WASHER TYPE 88-5 ST
CIRCUIT DIAGRAM, MON. SYSTEM
HARDWARE INTERLOCKS

DRAWING NUMBER	SHEET
5027560	23
DATE / REV.	NEXT SHEET
2005-05-16 / A	24

REV:	NOTE:	SIGN.	DATE:
A	PU06-0122	HS	070816

Downloaded from www.Manualslib.com manuals search engine

THIS DRAWING CONTAINS CONFIDENTIAL INFORMATION AND REMAINS THE PROPERTY OF GETINGE DISINFECTION AB WITHOUT WHOSE PERMISSION IT MAY NOT BE COPIED, SHOWN OR HANDED TO A THIRD PART OR USED AT THE BASIS OF ALTERNATE DESIGNS

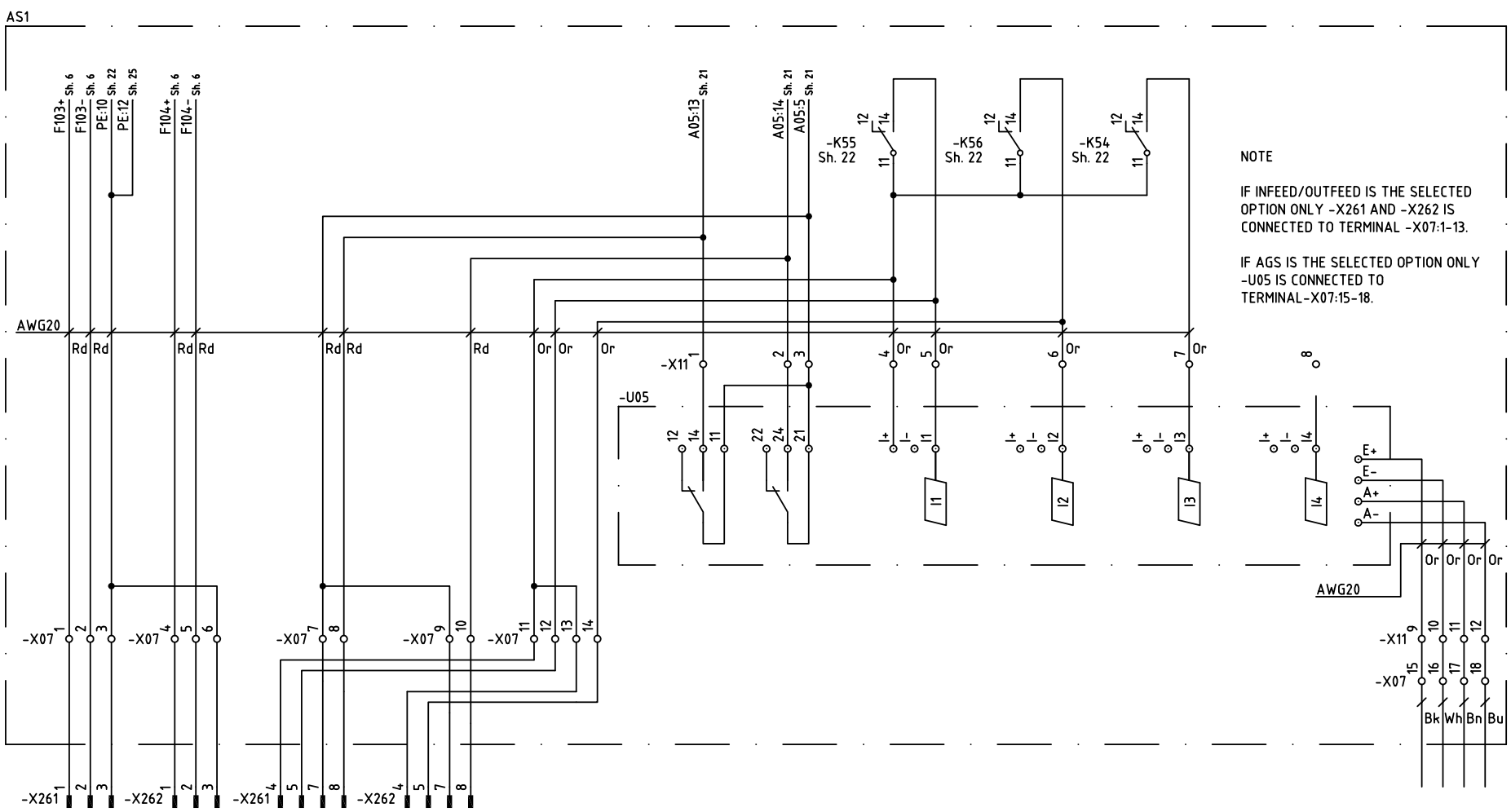

DRAWN BY	CHECKED BY (GETINGE)	APPROVAL (GETINGE)	DATE (APP.)	PROJECT NUMBER
MHn	JSn	JSn	2006-01-02	

GETINGE
GETINGE DISINFECTION
P.O. BOX 1505
SE 352 15 VAXJO
SWEDEN

UTENSIL WASHER TYPE 88-5 ST
CIRCUIT DIAGRAM, MON. SYSTEM
AGS SIGNALS

DRAWING NUMBER	SHEET
5027560	24
DATE / REV.	NEXT SHEET
2005-05-16 / A	25

REV:	NOTE:	SIGN.	DATE:
A	PU06-0122	HS	070816

Downloaded from www.Manualslib.com manuals search engine

THIS DRAWING CONTAINS CONFIDENTIAL INFORMATION AND REMAINS THE PROPERTY OF GETINGE DISINFECTION AB WITHOUT WHOSE PERMISSION IT MAY NOT BE COPIED, SHOWN OR HANDED TO A THIRD PART OR USED AT THE BASIS OF ALTERNATE DESIGNS

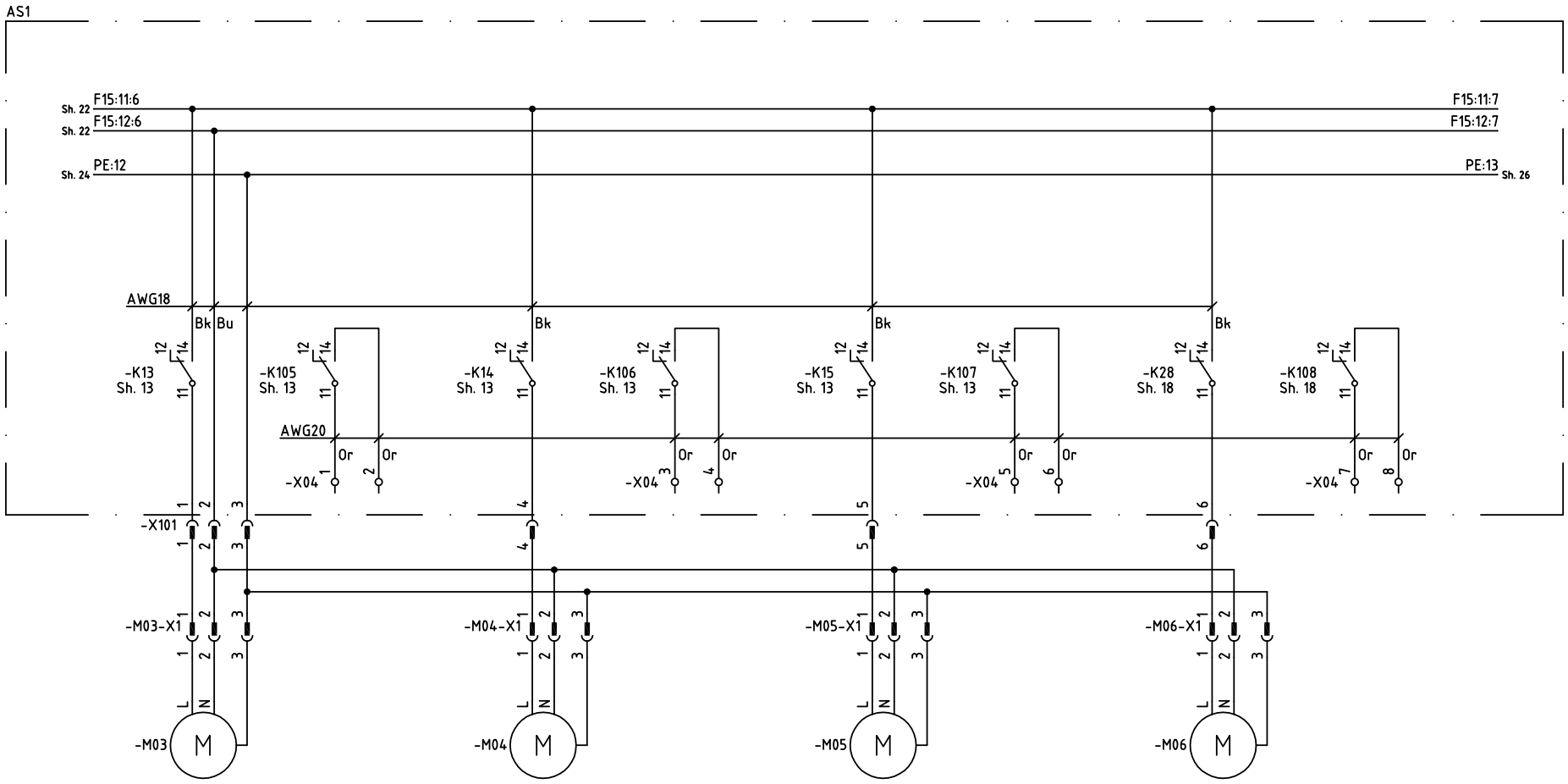

DRAWN BY	CHECKED BY (GETINGE)	APPROVAL (GETINGE)	DATE (APP.)	PROJECT NUMBER
MHn	JSn	JSn	2006-01-02	

GETINGE
GETINGE DISINFECTION
P.O. BOX 1505
SE 352 15 VÄXJÖ
SWEDEN

UTENSIL WASHER TYPE 88-5 ST
CIRCUIT DIAGRAM, MON. SYSTEM
DOSING PUMPS

DRAWING NUMBER	SHEET
5027560	25
DATE / REV.	NEXT SHEET
2005-05-16 / A	26

REV:	NOTE:	SIGN.	DATE:
A	PU06-0122	HS	070816

Downloaded from www.Manualslib.com manuals search engine

THIS DRAWING CONTAINS CONFIDENTIAL INFORMATION AND REMAINS THE PROPERTY OF GETINGE DISINFECTION AB WITHOUT WHOSE PERMISSION IT MAY NOT BE COPIED, SHOWN OR HANDED TO A THIRD PART OR USED AT THE BASIS OF ALTERNATE DESIGNS

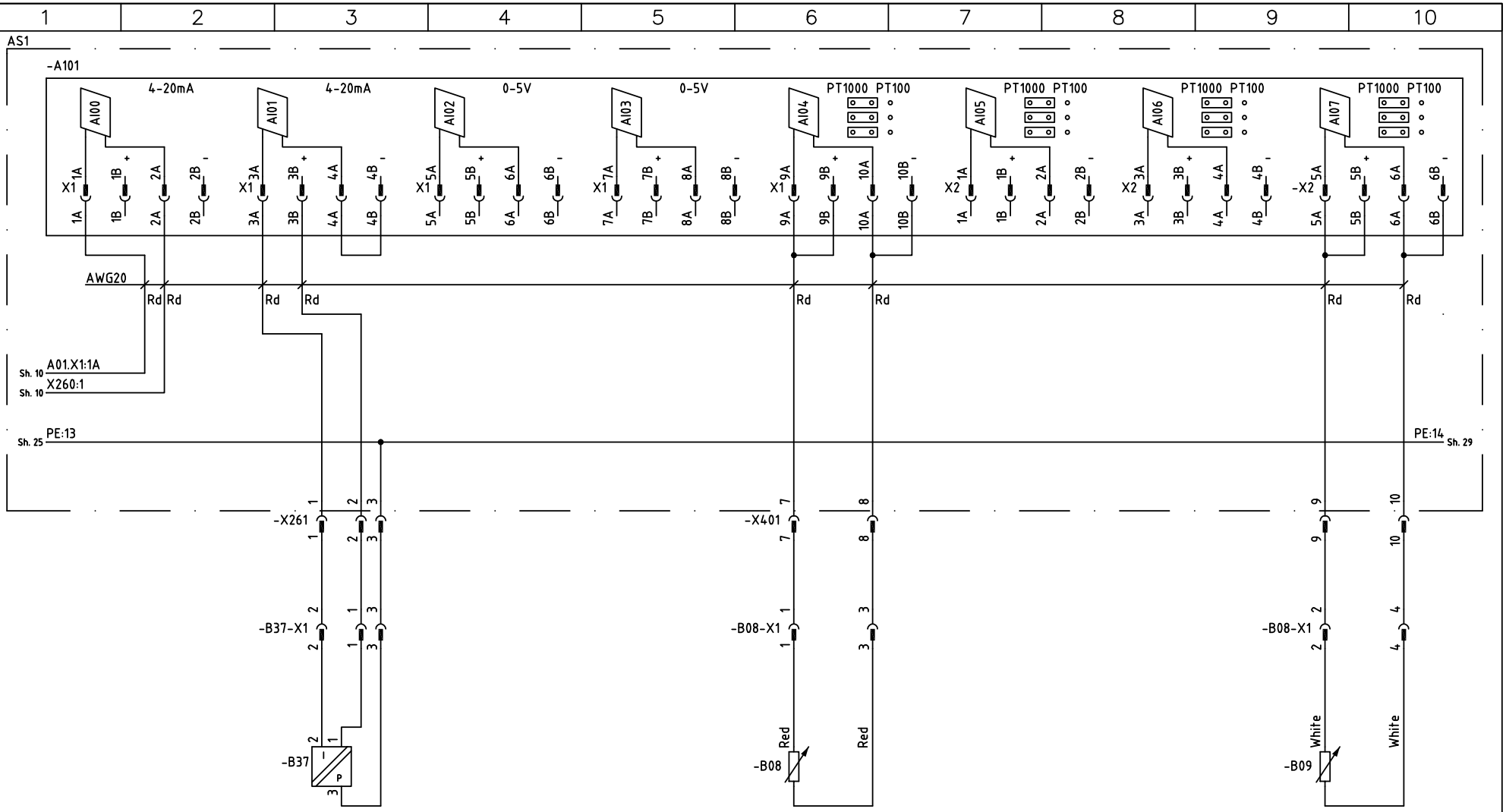

DRAWN BY	CHECKED BY (GETINGE)	APPROVAL (GETINGE)	DATE (APP.)	PROJECT NUMBER
MHn	JSn	JSn	2006-01-02	

GETINGE
GETINGE DISINFECTION
P.O. BOX 1505
SE 352 15 VÄXJÖ
SWEDEN

UTENSIL WASHER TYPE 88-5 ST
CIRCUIT DIAGRAM, MON. SYSTEM
MONITORING SYSTEM AI00- AI07

DRAWING NUMBER		SHEET
5027560		26
DATE	REV.	NEXT SHEET
2005-05-16	A	27

REV:	NOTE:	SIGN.	DATE:
A	PU06-0122	HS	070816

Downloaded from www.Manualslib.com manuals search engine

THIS DRAWING CONTAINS CONFIDENTIAL INFORMATION AND REMAINS THE PROPERTY OF GETINGE DISINFECTION AB WITHOUT WHOSE PERMISSION IT MAY NOT BE COPIED, SHOWN OR HANDED TO A THIRD PART OR USED AT THE BASIS OF ALTERNATE DESIGNS

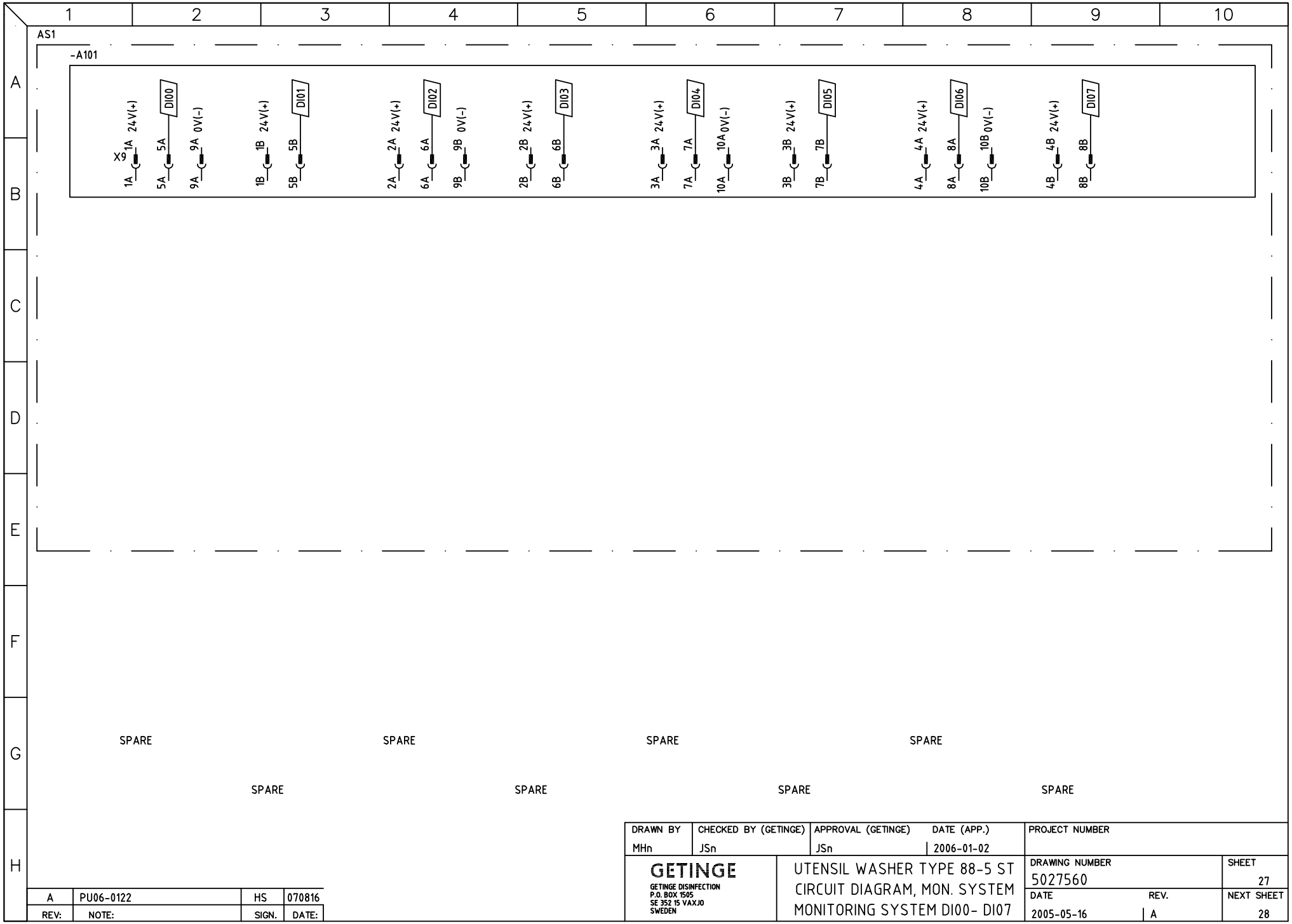

DRAWN BY	CHECKED BY (GETINGE)	APPROVAL (GETINGE)	DATE (APP.)	PROJECT NUMBER
MHn	JSn	JSn	2006-01-02	

GETINGE
GETINGE DISINFECTION
P.O. BOX 1505
SE 352 15 VAXJO
SWEDEN

UTENSIL WASHER TYPE 88-5 ST
CIRCUIT DIAGRAM, MON. SYSTEM
MONITORING SYSTEM DI00- DI07

DRAWING NUMBER		SHEET
5027560		27
DATE	REV.	NEXT SHEET
2005-05-16	A	28

REV:	NOTE:	SIGN.	DATE:
A	PU06-0122	HS	070816

Downloaded from www.Manualslib.com manuals search engine

THIS DRAWING CONTAINS CONFIDENTIAL INFORMATION AND REMAINS THE PROPERTY OF GETINGE DISINFECTION AB WITHOUT WHOSE PERMISSION IT MAY NOT BE COPIED, SHOWN OR HANDED TO A THIRD PART OR USED AT THE BASIS OF ALTERNATE DESIGNS

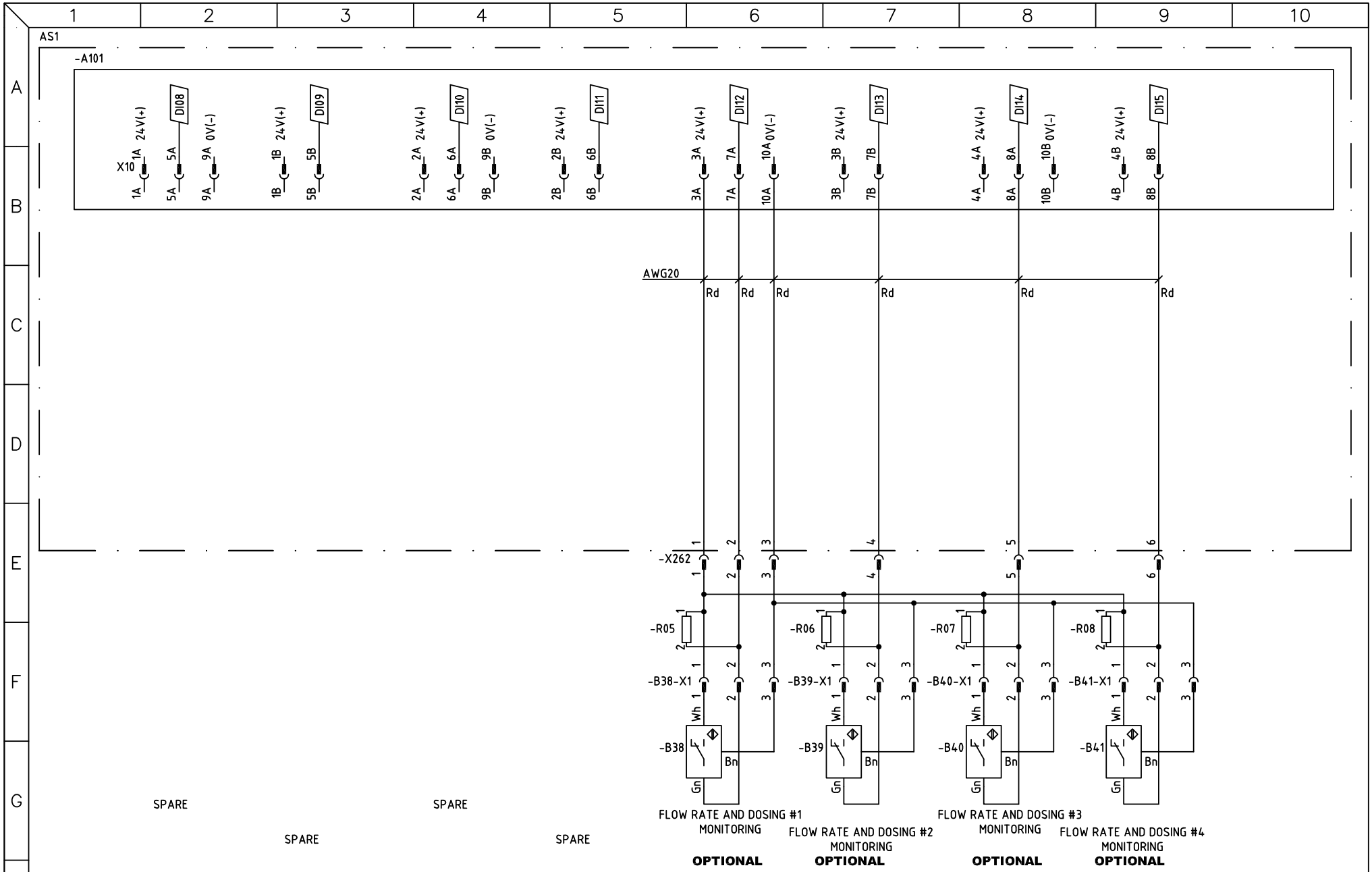

DRAWN BY	CHECKED BY (GETINGE)	APPROVAL (GETINGE)	DATE (APP.)	PROJECT NUMBER
MHn	JSn	JSn	2006-01-02	

GETINGE
GETINGE DISINFECTION
P.O. BOX 1505
SE 352 15 VAXJO
SWEDEN

UTENSIL WASHER TYPE 88-5 ST
CIRCUIT DIAGRAM, MON. SYSTEM
MONITORING SYSTEM DI08- DI15

DRAWING NUMBER		SHEET
5027560		28
DATE	REV.	NEXT SHEET
2005-05-16	A	29

REV:	NOTE:	SIGN.	DATE:
A	PU06-0122	HS	070816

Downloaded from www.Manualslib.com manuals search engine

THIS DRAWING CONTAINS CONFIDENTIAL INFORMATION AND REMAINS THE PROPERTY OF GETINGE DISINFECTION AB WITHOUT WHOSE PERMISSION IT MAY NOT BE COPIED, SHOWN OR HANDED TO A THIRD PART OR USED AT THE BASIS OF ALTERNATE DESIGNS

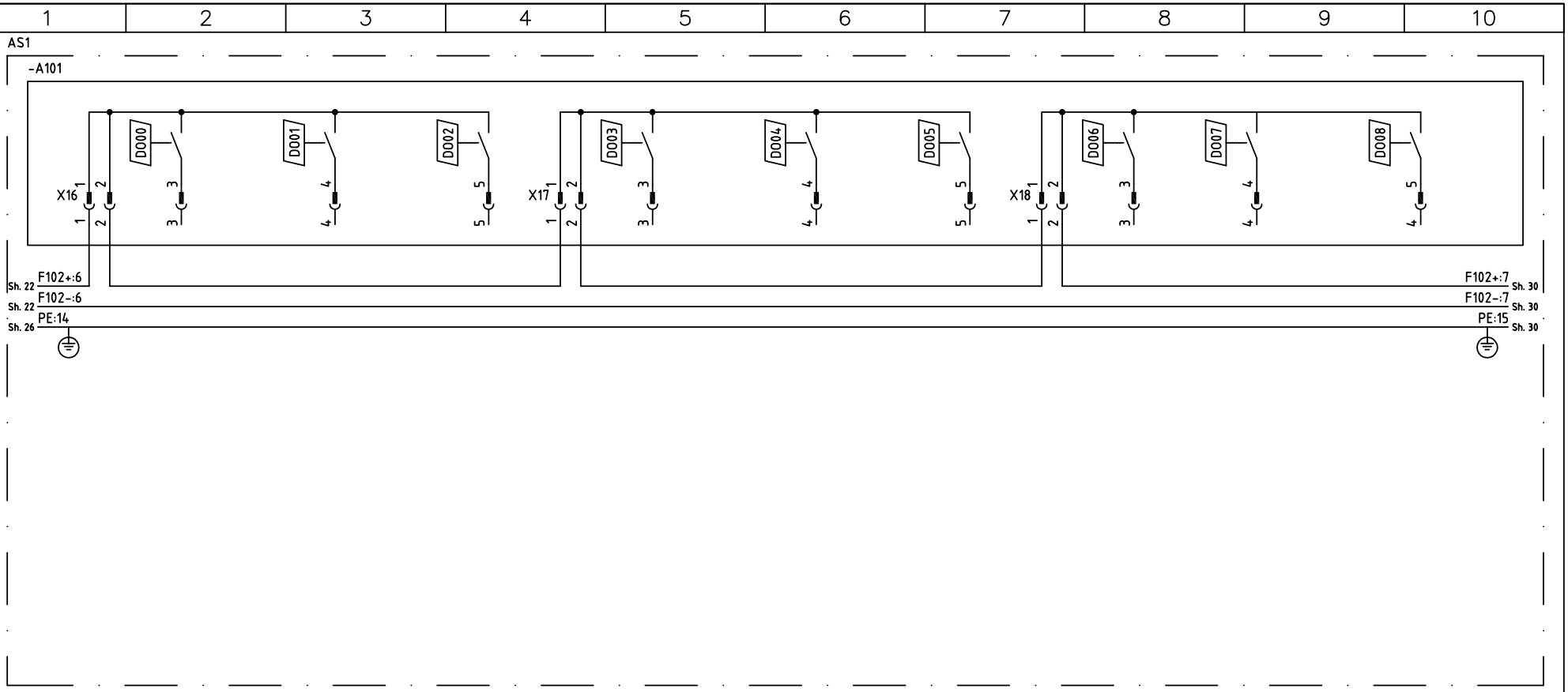

DRAWN BY	CHECKED BY (GETINGE)	APPROVAL (GETINGE)	DATE (APP.)	PROJECT NUMBER
MHn	JSn	JSn	2006-01-02	

GETINGE
GETINGE DISINFECTION
P.O. BOX 1505
SE 352 15 VÄXJÖ
SWEDEN

UTENSIL WASHER TYPE 88-5 ST
CIRCUIT DIAGRAM, MON. SYSTEM
MONITORING SYSTEM D000- D008

DRAWING NUMBER		SHEET
5027560		29
DATE	REV.	NEXT SHEET
2005-05-16	A	30

REV:	NOTE:	SIGN.	DATE:
A	PU06-0122	HS	070816

Downloaded from www.Manualslib.com manuals search engine

THIS DRAWING CONTAINS CONFIDENTIAL INFORMATION AND REMAINS THE PROPERTY OF GETINGE DISINFECTION AB WITHOUT WHOSE PERMISSION IT MAY NOT BE COPIED, SHOWN OR HANDED TO A THIRD PART OR USED AT THE BASIS OF ALTERNATE DESIGNS

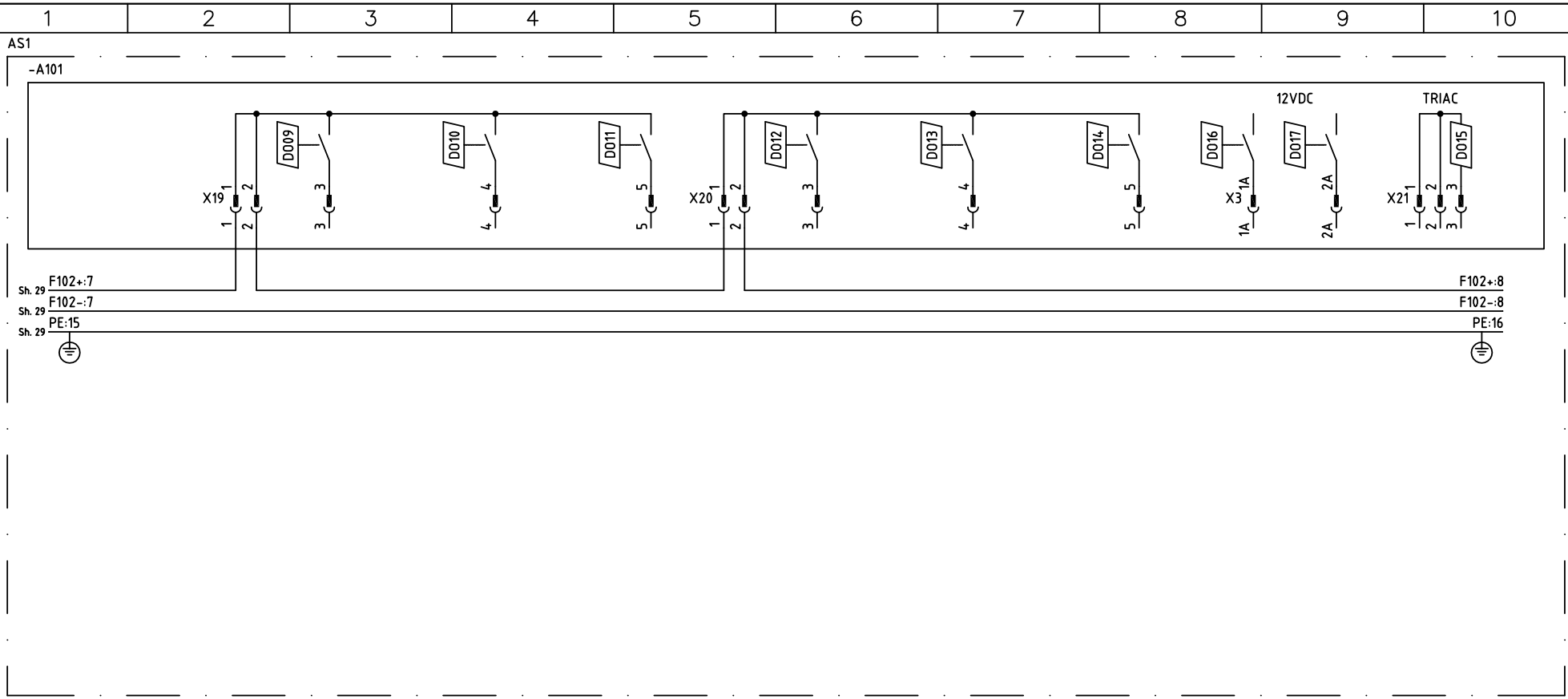

A	PU06-0122	HS	070816
REV:	NOTE:	SIGN.	DATE:

DRAWN BY	CHECKED BY (GETINGE)	APPROVAL (GETINGE)	DATE (APP.)
MHn	JSn	JSn	2006-01-02

PROJECT NUMBER

GETINGE
GETINGE DISINFECTION
P.O. BOX 1505
SE 352 15 VÄXJÖ
SWEDEN

UTENSIL WASHER TYPE 88-5 ST
CIRCUIT DIAGRAM, MON. SYSTEM
MONITORING SYSTEM D009- D017

DRAWING NUMBER	SHEET
5027560	30
DATE / REV.	NEXT SHEET
2005-05-16 / A	51

Downloaded from www.Manualslib.com manuals search engine

THIS DRAWING CONTAINS CONFIDENTIAL INFORMATION AND REMAINS THE PROPERTY OF GETINGE DISINFECTION AB WITHOUT WHOSE PERMISSION IT MAY NOT BE COPIED, SHOWN OR HANDED TO A THIRD PART OR USED AT THE BASIS OF ALTERNATE DESIGNS

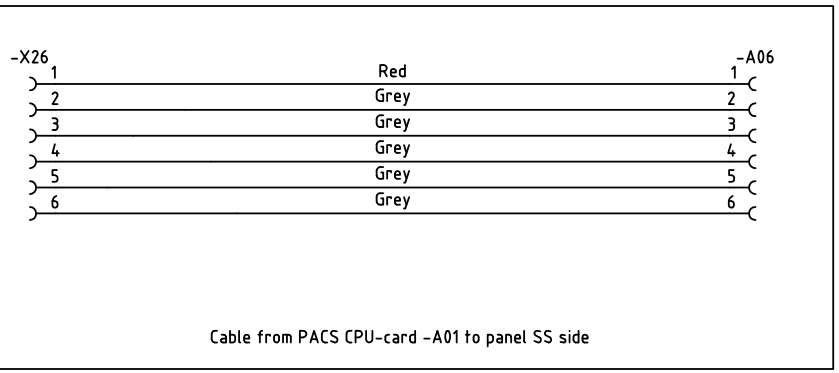

Cable from PACS CPU-card -A01 to panel SS side

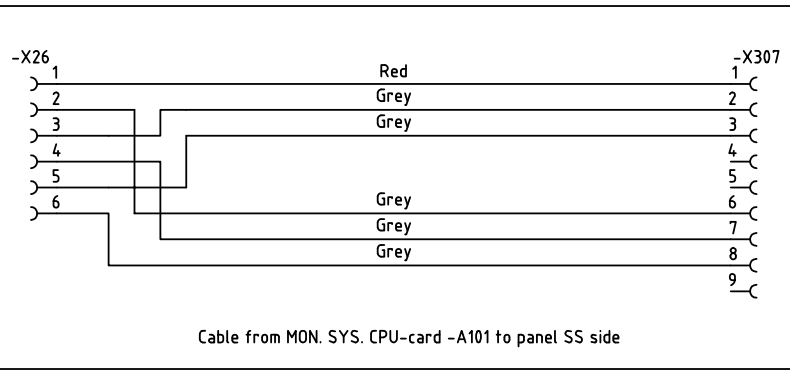

Cable from MON. SYS. CPU-card -A101 to panel SS side

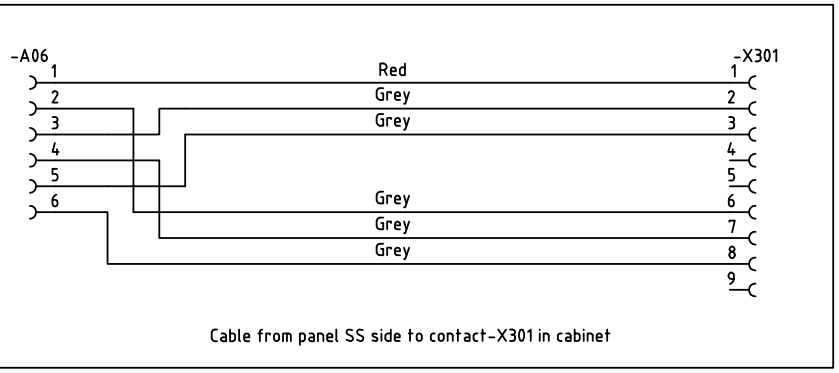

Cable from panel SS side to contact-X301 in cabinet

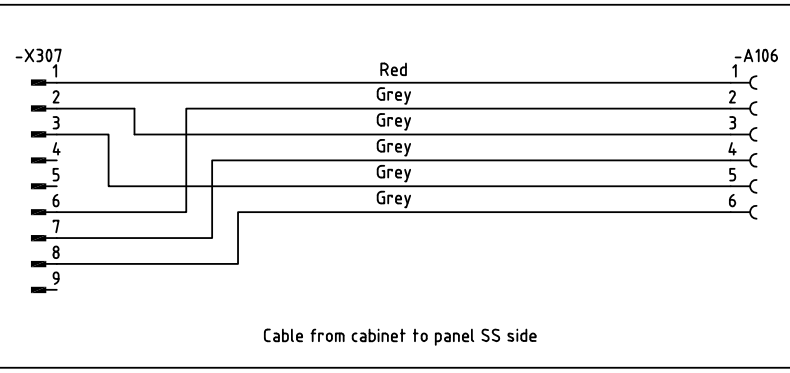

Cable from cabinet to panel SS side

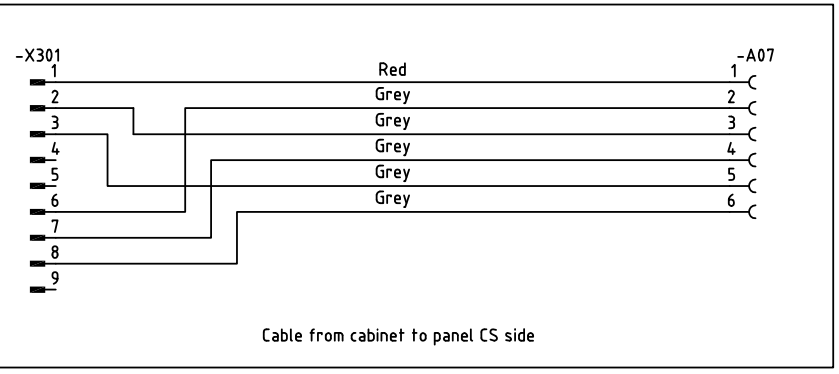

Cable from cabinet to panel CS side

DRAWN BY	CHECKED BY (GETINGE)	APPROVAL (GETINGE)	DATE (APP.)	PROJECT NUMBER
MHn	JSn	JSn	2006-01-02	

GETINGE
GETINGE DISINFECTION
P.O. BOX 1505
SE 352 15 VÄXJÖ
SWEDEN

UTENSIL WASHER TYPE 88-5 ST
CIRCUIT DIAGRAM, MON. SYSTEM
CABLES, PANEL CS AND SS

DRAWING NUMBER		SHEET
5027560		51
DATE	REV.	NEXT SHEET
2005-05-16	A	52

REV:	NOTE:	SIGN.	DATE:
A	PU06-0122	HS	070816

Downloaded from www.Manualslib.com manuals search engine

THIS DRAWING CONTAINS CONFIDENTIAL INFORMATION AND REMAINS THE PROPERTY OF GETINGE DISINFECTION AB WITHOUT WHOSE PERMISSION IT MAY NOT BE COPIED, SHOWN OR HANDED TO A THIRD PART OR USED AT THE BASIS OF ALTERNATE DESIGNS

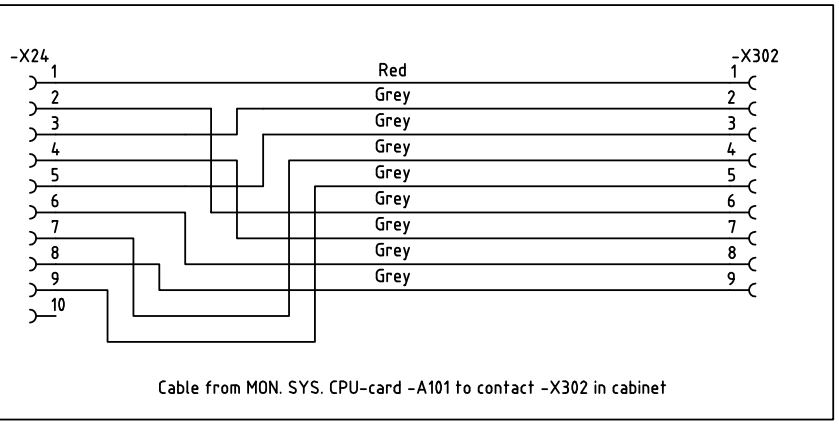

Cable from MON. SYS. CPU-card -A101 to contact -X302 in cabinet

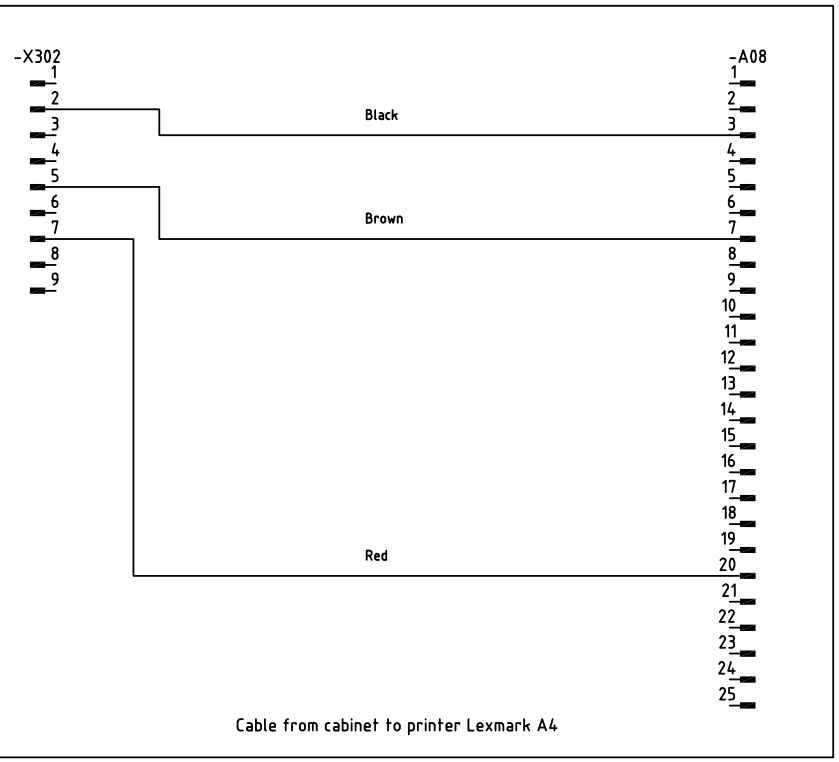

Cable from cabinet to printer Lexmark A4

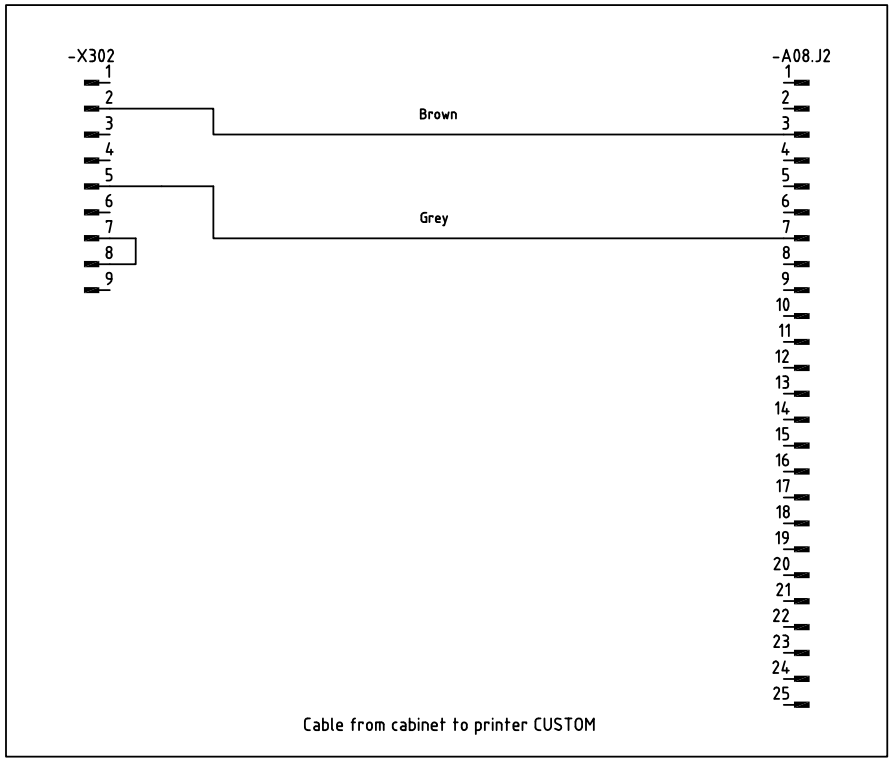

Cable from cabinet to printer CUSTOM

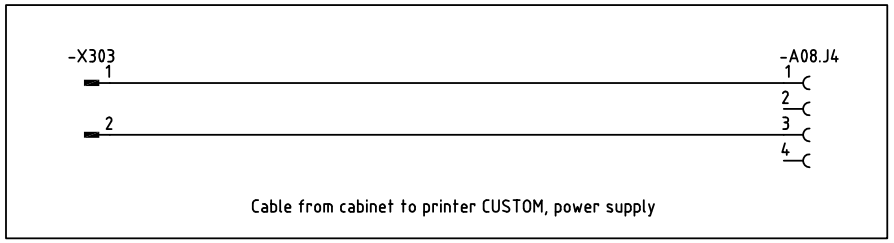

Cable from cabinet to printer CUSTOM, power supply

A	PU06-0122	HS	070816
REV:	NOTE:	SIGN.	DATE:

DRAWN BY	CHECKED BY (GETINGE)	APPROVAL (GETINGE)	DATE (APP.)
MHn	JSn	JSn	2006-01-02

PROJECT NUMBER

GETINGE
GETINGE DISINFECTION
P.O. BOX 1505
SE 352 15 VÄXJÖ
SWEDEN

UTENSIL WASHER TYPE 88-5 ST
CIRCUIT DIAGRAM, MON. SYSTEM
CABLES, PRINTER

DRAWING NUMBER		SHEET
5027560		52
DATE	REV.	NEXT SHEET
2005-05-16	A	53

Downloaded from www.Manualslib.com manuals search engine

THIS DRAWING CONTAINS CONFIDENTIAL INFORMATION AND REMAINS THE PROPERTY OF GETINGE DISINFECTION AB WITHOUT WHOSE PERMISSION IT MAY NOT BE COPIED, SHOWN OR HANDED TO A THIRD PART OR USED AT THE BASIS OF ALTERNATE DESIGNS

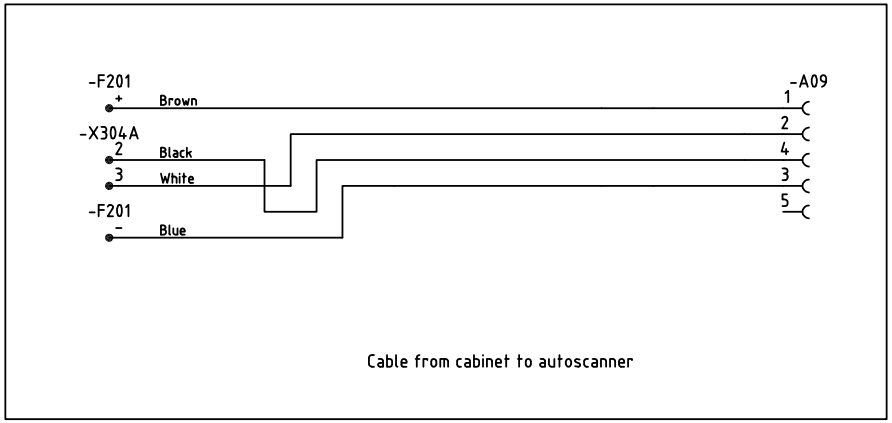

Cable from cabinet to autoscanner

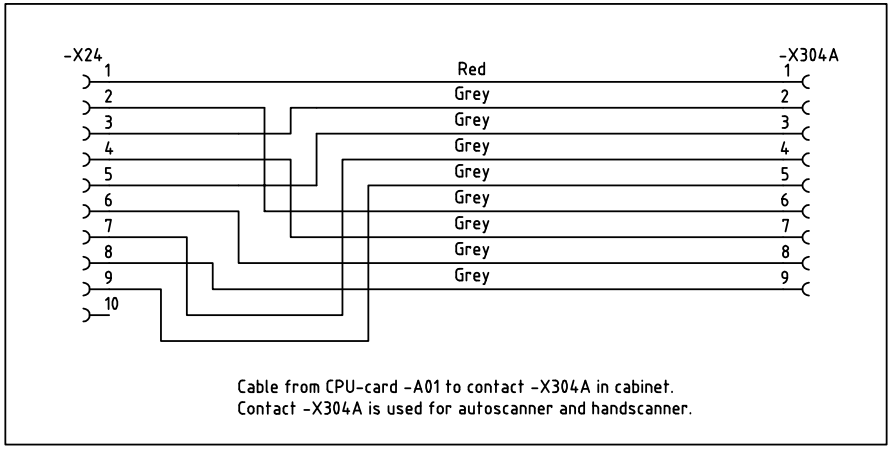

Cable from CPU-card -A01 to contact -X304A in cabinet.
Contact -X304A is used for autoscanner and handscanner.

A	PU06-0122	HS	070816
REV:	NOTE:	SIGN.	DATE:

DRAWN BY	CHECKED BY (GETINGE)	APPROVAL (GETINGE)	DATE (APP.)	PROJECT NUMBER	
MHn	JSn	JSn	2006-01-02		

GETINGE
GETINGE DISINFECTION
P.O. BOX 1505
SE 352 15 VÄXJÖ
SWEDEN

UTENSIL WASHER TYPE 88-5 ST
CIRCUIT DIAGRAM, MON. SYSTEM
CABLES, AUTOSCANNER

DRAWING NUMBER		SHEET
5027560		53
DATE	REV.	NEXT SHEET
2005-05-16	A	54

Downloaded from www.Manualslib.com manuals search engine

THIS DRAWING CONTAINS CONFIDENTIAL INFORMATION AND REMAINS THE PROPERTY OF GETINGE DISINFECTION AB WITHOUT WHOSE PERMISSION IT MAY NOT BE COPIED, SHOWN OR HANDED TO A THIRD PART OR USED AT THE BASIS OF ALTERNATE DESIGNS

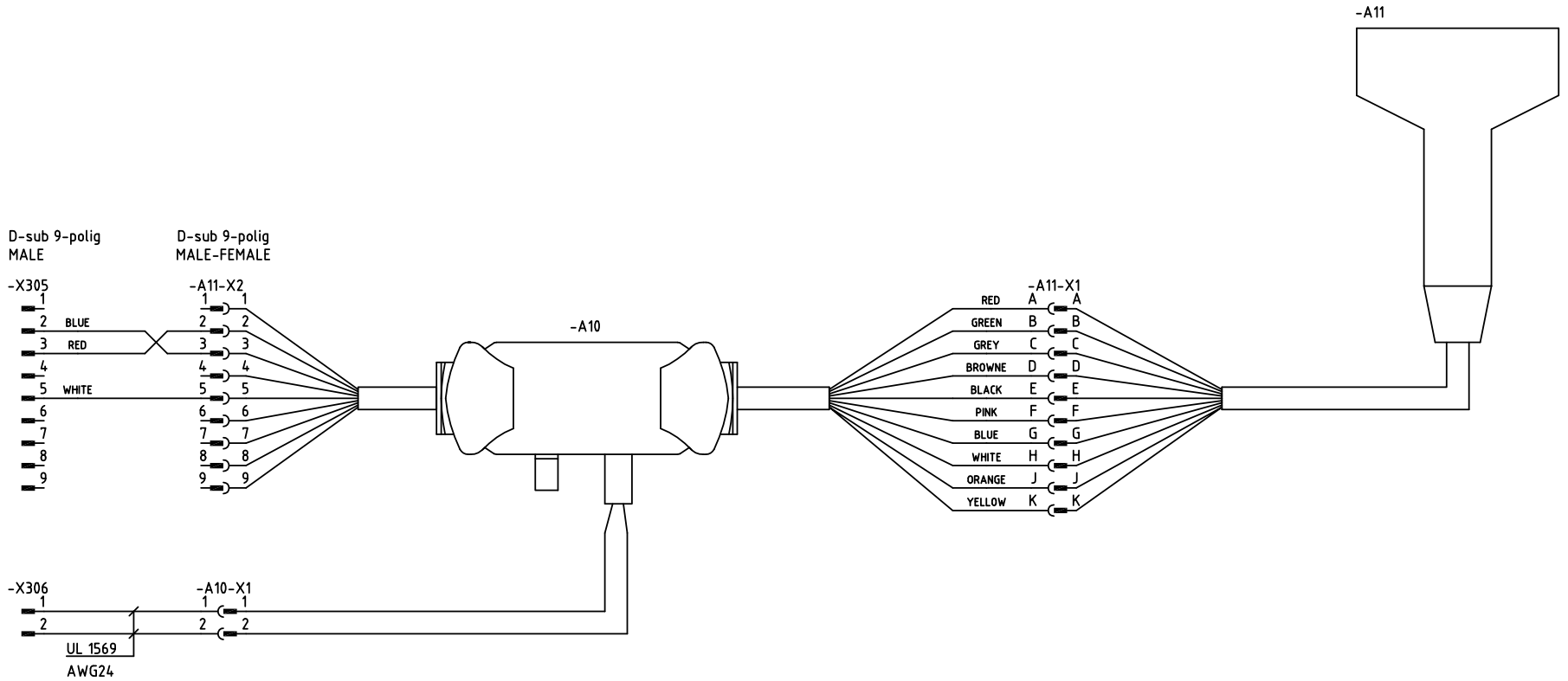

A	PU06-0122	HS	070816
REV:	NOTE:	SIGN.	DATE:

DRAWN BY	CHECKED BY (GETINGE)	APPROVAL (GETINGE)	DATE (APP.)	PROJECT NUMBER
MHn	JSn	JSn	2006-01-02	

GETINGE
GETINGE DISINFECTION
P.O. BOX 1505
SE 352 15 VAXJO
SWEDEN

UTENSIL WASHER TYPE 88-5 ST
CIRCUIT DIAGRAM, MON. SYSTEM
CABLE, HANDSCANNER

DRAWING NUMBER		SHEET
5027560		54
DATE	REV.	NEXT SHEET
2005-05-16	A	55

Downloaded from www.Manualslib.com manuals search engine

THIS DRAWING CONTAINS CONFIDENTIAL INFORMATION AND REMAINS THE PROPERTY OF GETINGE DISINFECTION AB WITHOUT WHOSE PERMISSION IT MAY NOT BE COPIED, SHOWN OR HANDED TO A THIRD PART OR USED AT THE BASIS OF ALTERNATE DESIGNS

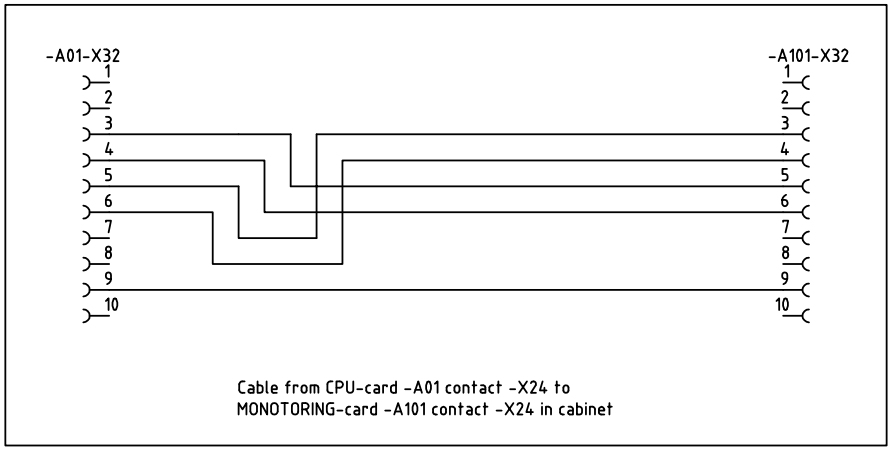

Cable from CPU-card -A01 contact -X24 to
MONOTORING-card -A101 contact -X24 in cabinet

A	PU06-0122	HS	070816
REV:	NOTE:	SIGN.	DATE:

DRAWN BY	CHECKED BY (GETINGE)	APPROVAL (GETINGE)	DATE (APP.)	PROJECT NUMBER	
MHn	JSn	JSn	2006-01-02		

GETINGE
GETINGE DISINFECTION
P.O. BOX 1505
SE 352 15 VAXJO
SWEDEN

UTENSIL WASHER TYPE 88-5 ST
CIRCUIT DIAGRAM, MON. SYSTEM
COMMUNICATION PACS MON. SYS

DRAWING NUMBER		SHEET
5027560		55
DATE	REV.	NEXT SHEET
2005-05-16	A	101

Downloaded from www.Manualslib.com manuals search engine

THIS DRAWING CONTAINS CONFIDENTIAL INFORMATION AND REMAINS THE PROPERTY OF GETINGE DISINFECTION AB WITHOUT WHOSE PERMISSION IT MAY NOT BE COPIED, SHOWN OR HANDED TO A THIRD PART OR USED AT THE BASIS OF ALTERNATE DESIGNS

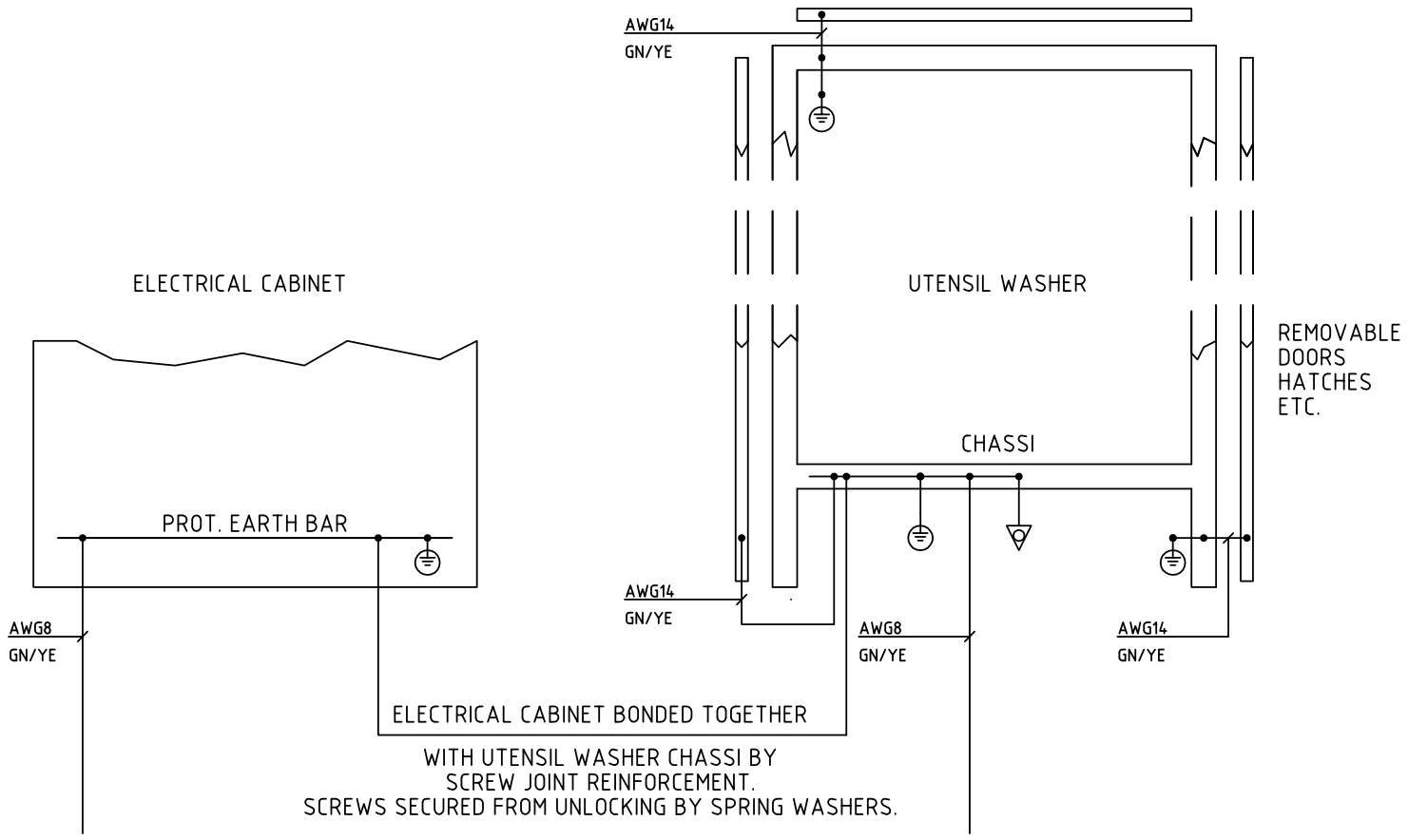

EXTERNAL PROTECTIVE EARTH CONDUCTOR
FROM POWER DISTRIBUTION

EXTERNAL EQUAL POTENTIAL BONDING CONDUCTOR
FROM EQUAL POTENTIAL BONDING BAR

ALL CONNECTIONS TO
PROTECTIVE EARTH SYSTEM
SHALL BE MARKED WITH
FOLLOWING SYMBOL

DRAWN BY	CHECKED BY (GETINGE)	APPROVAL (GETINGE)	DATE (APP.)
MHn	JSn	JSn	2006-01-02

PROJECT NUMBER

GETINGE
GETINGE DISINFECTION
P.O. BOX 1505
SE 352 15 VAXJO
SWEDEN

UTENSIL WASHER TYPE 88-5 ST
CIRCUIT DIAGRAM, MON. SYSTEM
PROTECTIVE BONDING CIRCUIT

DRAWING NUMBER	SHEET
5027560	101
DATE / REV.	NEXT SHEET
2005-05-16 / A	-

REV:	NOTE:	SIGN.	DATE:
A	PU06-0122	HS	070816

GETINGE

<Doc_TEC><Doc_502406700><Rel_B><Lang_GB>

Downloaded from www.Manualslib.com manuals search engine

GETINGE

Downloaded from www.Manualslib.com manuals search engine

GETINGE

<Doc_TEC><Doc_502406700><Rel_B><Lang_GB>

Downloaded from www.Manualslib.com manuals search engine

Downloaded from www.Manualslib.com manuals search engine

Australia
Getinge Australia Pty ltd
PO Box 50, Bulimba QLD 4172
Unit 1, 205 Queensport Rd.
Murarrie QLD 4173
info@getinge.com.au
Phone:+61-7 3399 3311

Belgium
Getinge NV
Vosveld 4 B-2
B-2110 Wijnegem
info@getinge.be
Phone: +32-33 542 865

Canada
Getinge Canada Ltd
1575 South Gateway Road,
Unit C Mississauga
Ontario L4W 5J1
info@getingecastle.ca
Phone: +1-905 629 8777

China
Getinge (Suzhou) Co.Ltd
No.158,Fang Zhou Road, Suzhou
Industrial Park 15021 Suzhou,
Jiangsu Province P.R.China
info@getinge.com.cn
Phone: +86- 51 262 838 966

Getinge Shanghai Trading Co. Ltd.
Rm 1988 Tower B,
CityCentr, 100 Zunyi Rd.
200051 Shanghai P.R.
info@getinge.com.cn
Phone: +86- 21 623 72 408

Denmark
Getinge Danmark A/S
Firskovvej 23
DK-2800 Lyngby
getinge.danmark@getinge.com
Phone: +45-45 93 27 27

Finland
Getinge Finland AB
Ängsgatan 8
FI-02200 Esbo
getinge@getinge.fi
Phone: +35-89 6824 120

France
Getinge France SAS
BP 49, avenue du Canada
ZA de Courtaboeuf
Les Ulis, FR-91942
getinge.france@getinge.fr
Phone: +33-1 64 86 89 00

Germany
MAQUET Vertireb und Service
Deutschland GmbH
Kehler str.31
D-76437 Rastatt
E-Mail: info.vertrieb@maquet.de
Tel: +49(0) 1803 2121 33

Italy
Getinge S.p.A
via Poggio Verde, 34
00148 Roma
info@getinge.it
Phone: +39-06 656 631

Netherlands
Getinge B.V.
Fruitenniersstraat 27, Zwijndrecht
Postbus 1004
NL-3330 CA Zwijndrecht
info@getinge.nl
Phone: +31-78 610 24 33

Norway
Getinge Norge A/S
Ryenstubben 2
0679 Oslo
info@getinge.no
Phone: +47-23 051 180

Poland
Getinge Poland
Ul. Lirowa 27
02-387 Warszawa
office@getinge.pl
Phone: +48-22 882 06 26

Singapore
Getinge International Far East Pte. Ltd.
20 Bendemeer Road, #06-02,
Cyberhub Building
Singapore, SG-339914
Phone: + 65- 6396 7298

South Africa
Getinge South Africa (Pty) Ltd
P O Box 48492
Hercules
Pretoria SA 0002
getinge@mweb.co.za
Phone: +27-123 721 370

Spain
Getinge Iberica SL
P.E. San Fernando, Avda. Castilla 2,
Edif. Francia 1era planta
San Fernando de Henares
Madrid ES-28830
administracion@getinge.es
Phone: + 34-916 78 26 26

Sweden
Getinge International AB
P O Box 69
SE-310 44 Getinge
info@getinge.com
Phone: +46-35 15 55 00

Switzerland
Getinge ALFA AG
Weidenweg 17
4310 Rheinfelden
info@alfa.ag
www.getingealfa.ch
Phone: +41-61 836 15 15

United Kingdom
Getinge UK Ltd
Orchard Way
Calladine Park
Sutton-In-Ashfield
Notts NG 17 1JU
sales@getinge.co.uk
Phone: +44-1623510033

USA
Getinge USA Inc.
1777 East Henrietta Road
Rochester, NY 14623-3133
info@getingeusa.com
www.getingeusa.com
Phone: +1-5,854,751,400

GETINGE
www.getinge.com

Downloaded from www.Manualslib.com manuals search engine