M1026A Anesthetic Gas Module

Service Guide

Anesthetic Gas Module

M1026A

Patient Monitoring

PHILIPS

Part Number M1026-9101A

PHILIPS

Table of Contents

1

Anesthetic Gas Module

Introduction

This chapter contains the following information on the M1026A Anesthesia Gas Module:

- A description of the Module, including its physical, environmental and performance specifications
- A general explanation of the measurement principles that the Module uses to measure gas concentrations
- The theory of operation of the Module: the layout of its components and how they work.

Description

The Philips M1026A Anesthetic Gas Module works together with the IntelliVue MP90 patient monitors through an RS232 serial interface. It measures the airway gases of ventilated patients who are under general gas anesthesia, or emerging from it.

The module produces graphical wave data, and inspired and end-tidal numeric data for the following gases:

- CO_2
- N_2O
- One volatile anesthetic agent
- O_2 (optional)

It also generates numerics for the patient's airway respiration rate (AWRR).

The Agent Identification feature identifies which anesthetic agent is being used.

Product Structure

The only version of the M1026A Anesthetic Gas Module compatible with the IntelliVue Monitoring System is:

M1026A #A05: M1026A Watertrap with 5-Agent-ID (Hal, Iso, Enf, Des, Sev)

- #C03 (MUST-Option): adds fast O_2 measurement

Physical Specifications

Size (H x W x D)

90mm x 370mm x 467mm (3.54 x 14.6 x 18.4 in).

Weight

8.2 kg (18 lb).

Environmental Specifications

Operating Temperature

15 to 40°C (59 to 104°F).

Storage Temperature

-40 to 65°C (-40 to 149°F).

Humidity Limit (Operating)

up to 95% RH max @ 40 °C (104 °F).
non-condensing

Humidity Limit (Storage)

up to 95% RH max @ 65 °C (149 °F).
non-condensing

Altitude Range (Operating)

-305 to 3048m (-1,000 to 10,000 ft).

Altitude Range (Storage)

-305 to 5,486m (-1,000 to 18,000 ft).

Warm-up Time

After switching on: 2 minutes to measure, 8 minutes for full specification accuracy.

Performance Specifications

All Performance and accuracy specifications are valid based on gas sample tubing M1658A, including watertrap M1657B, and airway adapter 13902A.

Humidity Correction: For CO_2 the humidity correction can be set to “wet” or “dry”.

Wet: p [mmHg] = c [Vol%] * (p_abs - p_H_2O)/100

Dry: p [mmHg] = c [Vol%] * p_abs /100

Where p = partial pressure, c = gas concentration, p_abs = pressure in breathing circuit, p_H_2O = 47 mmHg, partial pressure of water vapor of exhaled gas (37 ^oC, 100% rh).

For all other gases the readings are always given as dry values.

Sample Flow Rate*:* 150 ml/min.

Sample Delay Time: All measurements and alarms are subject to a delay of 3 seconds.

Total System Response Time = the sum of the delay time and the rise time.

CO_2 Measurement

Range:	0 to 76 mmHg
Accuracy:	1.5 mmHg (0 - 40 mmHg) 2.5 mmHg (40 - 60 mmHg) 4.0 mmHg (60 - 76 mmHg)
Resolution:	1 mmHg
Rise-time:	410 msec typical

The total system response time is the sum of the sample delay time (3 seconds) and the rise time (410 msec typical)

AWRR derived from CO_2 Waveform

Range:	0 to 60 rpm
Accuracy:	± 2 rpm
Resolution:	1 rpm
Detection Criteria:	6 mmHg variation in CO_2

N_2O Measurement

Range:	0 to 85 vol%
Accuracy:	1.5 vol% + 5% relative
Resolution:	1 vol%
Rise-time:	510 msec typical

O_2 Measurement

Range:	0 to 100vol%
Accuracy:	± 2.5 vol% or 5% relative, whichever is the greater.
Resolution:	1 vol%
Rise-time:	450 msec typical

Anesthetic Agent Measurement

Agent	Range (vol%)	Accuracy	Resolution	Rise Time
Halothane	0 - 7.5	0.2 vol% + 4.0% relative	0.05	< 740
Enflurane	0 - 7.5	0.1 vol% + 4.0% relative	0.05	< 620

Agent	Range (vol%)	Accuracy	Resolution	Rise Time
Isoflurane	0 - 7.5	0.1 vol% + 4.0% relative	0.05	< 610
Sevoflurane	0 - 9.0	0.1 vol% + 4.0% relative	0.05	< 570
Desflurane	0 - 20.0	0.1 vol% + 6.0% relative	0.05(0-10) 0.1 (10.1-20)	< 540

Alarm Ranges

Agent	High Range	Low Range
AWRR	10 - 60 rpm	0 - 59 rpm
$ETCO_2$	20 - 76 mmHg	10 - 75 mmHg
$IMCO_2$	2 - 20 mmHg	none
inN_2O	0 - 82 vol%	none
inO_2	19-100 vol%	18 - 99 vol%
et SEV	0.1 - 9.0 vol%	0.0 - 8.9 vol%
in SEV	0.1 - 9.0 vol%	0.0 - 8.9 vol%
et DES	0.2 - 20.0 vol%	0.0 - 19.8 vol%
in DES	0.2 - 20.0 vol%	0.0 - 19.8 vol%
Halothane, Enflurane, Isoflurane		
et	0.1 - 7.5 vol%	0.0 - 7.4 vol%
in	0.1 - 7.5 vol%	0.0 - 7.4 vol%

Alarm Delay

10 seconds if no automatic zero calibration occurs within that time.

Apnea Alarm

Delay Range:	10 - 40 seconds
Criterion	No detected breath within the adjusted delay time
Alarm:	Within 2 seconds after this criterion is met, if no automatic zero occurs

INOP Alarms

INOP alarms are triggered if:

- The Philips M1026A Anesthetic Gas Module is disconnected or switched off.
- The equipment malfunctions.
- The Agent-ID malfunctions.
- Zero calibration has failed.

- Zero calibration is in progress.
- The gas sample tube is occluded, or the water trap is full.
- The Philips M1026A Anesthetic Gas Module is unable to measure.
- Gas contaminant is detected.
- Agent mixture detected.
- Anesthetic agent detected but not selected.
- The module is in warm-up mode.
- No breath detected.
- The Anesthetic Gas Module is incompatible with the monitor

General Measurement Principles

The Philips M1026A Anesthetic Gas Module uses a technique called *Non-Dispersive Infrared Gas Concentration Measurement* (NDIR) to measure the concentration of gases.

This works as follows:

- The gases that the Philips M1026A Anesthetic Gas Module can measure absorb infrared (IR) light.
- Each gas has its own absorption characteristic. The gas mixture is transported into a sample cell, and an IR filter selects a specific band of IR light to pass through the gas. For multiple gas measurements, multiple IR filters are used.
- The higher the concentration of gas in the mixture the more IR light it absorbs. This means that higher concentrations of IR absorbing gas results in lower transmission of IR light.
- The amount of IR light transmitted through an IR absorbing gas is measured.
- From the amount of IR light transmitted, the concentration of gas can be calculated. This calculation provides the gas concentration value.

O_2 gas cannot be measured with this technique as it does not absorb IR light. Hence O_2 gas is measured with a sensor that makes use of the paramagnetic properties of O_2 for its fast measurement technique.

Theory of Operation

Figure 1 shows the functional blocks within the Philips M1026A Anesthetic Gas Module.

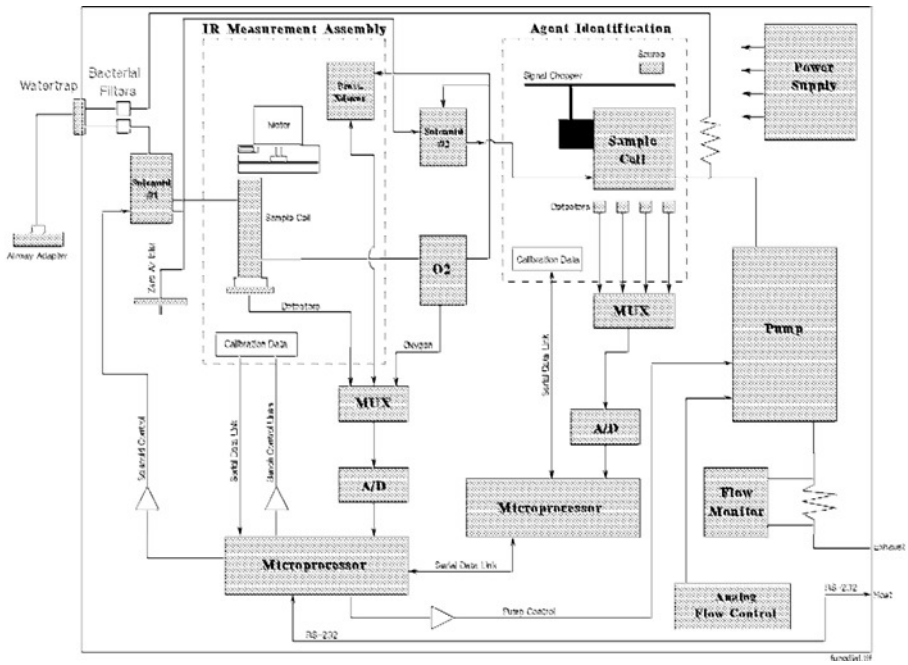

Figure 1 Anesthetic Gas Module Functional Block Diagram

The main components of the Philips M1026A Anesthetic Gas Module are:

- Main PC Board.
- Switching Power Supply.
- Pneumatic System.
- Agent Identification.
- O_2 Sensor.
- Infrared Measurement Assembly.

Main PC Board

This digital board:

- Controls the pneumatic system and the IR measurement assembly.
- Converts the preamplified analog output signal from the IR detector into a digital value. Under software-controlled processing, this is then converted to a fully compensated gas concentration value.
- Converts analog signals from the sample cell pressure sensor, transducer, sample cell temperature thermistor, and the ambient temperature thermistor, into digital environmental data for gas compensation and data reporting.
- Converts an analog O_2 signal, supplied by the O_2 measurement system, into O_2 concentration data for CO_2 compensation and O_2 data reporting.

- Converts analog signals from the flow-control servo system and power supply into digital data for status reporting.
- Processes the algorithm for end-tidal, inspired and respiration rate values.
- Controls the communication between the monitor and the Philips M1026A Anesthetic Gas Module through an RS232 interface that uses a standard communications protocol.
- Contains the software program that controls the Philips M1026A Anesthetic Gas Module in a 128K EPROM.

Power Supply

The input voltage is 100V - 240V. The output voltages are ±12V and +5V and the maximum output is 55W.

Pneumatic System

The main parts of the pneumatic system are:

- Watertrap.
- Pump assembly, including pump outlet filter.
- Two solenoid valves.
- Tubing system including:
  - Differential pressure transducer and restrictor for control of the total flow.
  - Measurement path.
  - Drainage path parallel to measurement path.
- Ambient air reference filter.

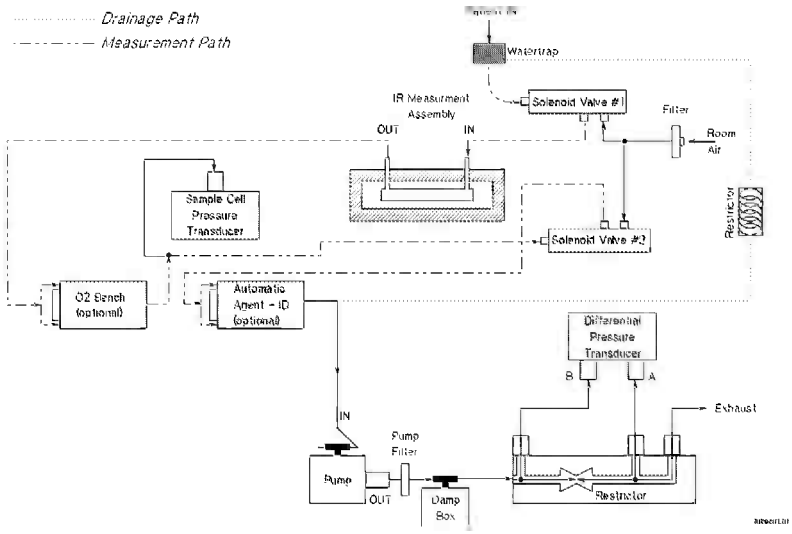

Figure 2 Pneumatic System

The pneumatic system works in the following way:

1 Eliminates residual water and fluids from patient sample gas using the watertrap and eliminates water vapor using Nafion Tubing.

2 Splits the patient's sample gas flow (150ml/min) into the measurement path (120ml/min) and drainage path (30ml/min).

3 Passes the patient's sample gas in the measurement path at 120ml/min through the measurement benches.

4 Delivers zero calibration gas to the sample cells for the periodic zeroing.

5 Exhausts the patient's sample gas, the zero calibration gas, and the span calibration gas.

6 Monitors for an occlusion in the sampling pneumatics.

Pump

The servo-controlled pump is attached to the exhaust of the Anesthetic Gas Module. It generates the flow through the system and pulls the gas from the airway adapter through the measurement subsystems to the exhaust outlet. It also delivers the zero calibration gas to the sample cells of the measurement subsystems for the periodic zero procedures and it exhausts the patient's sample gas, the zero calibration and field calibration gases.

The flow-rate control logic drives the pump as hard as necessary to maintain the selected flow rate. A partial occlusion or an inefficient pump results in the pump being driven harder. A serious occlusion results in the pump being driven at or near its maximum load. This triggers a sensing circuit, which then reports an occlusion.

Watertrap

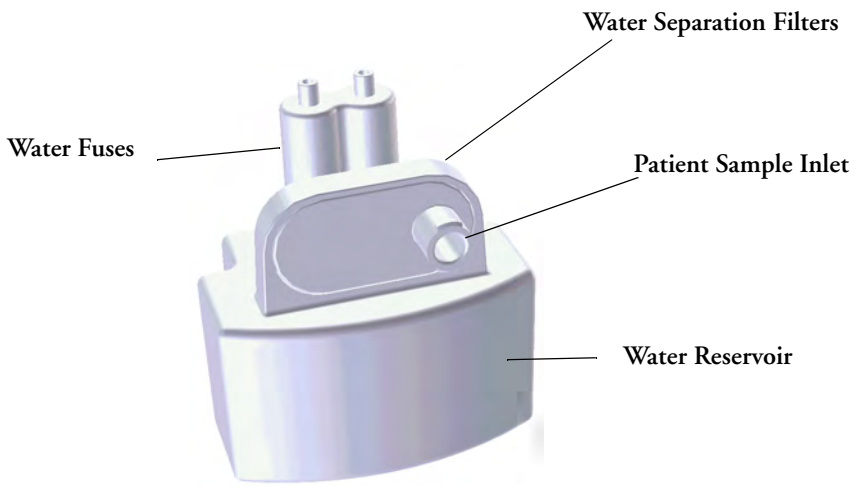

Figure 3 Watertrap

The watertrap consists of two water separation filters, two water fuses and a water reservoir. The gas sample coming from the patient may contain fluids which are separated from the gas at the first water separation filter. The gas is then split into two paths, the “measurement” path with the main part of the total gas flow (including water vapor) continuing on the “dry” side of the separation filter and the “drainage” path (containing any liquid droplets) with the smaller amount of the total flow continuing on the “wet” side of this filter. At the pump both gas paths are recombined.

The watertrap proper includes “water fuses” in both the “measurement” and the “drainage” paths, consisting of a material that swells when getting wet (when the reservoir is full or when fluid penetrates the separation filter and enters the “measurement” path) and blocks the respective path at the inlet of the unit. Once the “water fuses” are blown, any passage of fluid is blocked and the gas flow resistance increases so that an occlusion is detected.

Sample Flow Through the Pneumatic Path

- The drainage path serves to withdraw fluid separated from the gas sample into the watertrap reservoir, so that the AGM interior is protected from fluid that might cause an occlusion in the measurement path.The drainage path leads into the large watertrap reservoir where all liquid water and other fluids are collected. When the drainage path leaves the watertrap through a water separation filter and a through a water fuse it leads through internal Nafion tubing then through a bacterial protection filter and flow restrictor directly to the pump. This flow restrictor determines the percentage distribution between drainage and measurement path flow.
- The measurement path leads through a water separation filter and through a water fuse on into the measurement system. The patient sample gas (on the measurement path) then flows through internal Nafion tubing and through a bacterial protection filter to the first solenoid valve. Room air for the zero calibration is alternatively input (via a dust filter) to this solenoid valve. The solenoid valve switches between the two gases depending on the current mode of operation - normal measurement or zero calibration.

The patient sample gas or zero calibration gas then flows through the measurement subassemblies:

- the IR Measurement Assembly (for measurement of anesthetic agent, CO_2 and N_2O)
- the O_2 cell (if present)
- the Agent Identification assembly.

  A second solenoid valve between the O_2 cell and the Agent Identification Assembly routes room air directly to the Agent Identification Assembly for optimal purging of the assembly during zero calibration.

  From the Agent Identification Assembly the patient sample gas or zero calibration gas flows to the pump. Before reaching the pump, it joins the drainage path again.

From here it is passed through a filter and damper to the flow sensor which consists of a differential pressure transducer and a flow restrictor. The flow sensor determines, stabilizes and limits the flow rate of the sampled gas.

After the gas has passed through the flow sensor it is routed through a second damper to the Sample Gas output.

Agent Identification Assembly

The agent ID analyzer identifies which anesthetic agents are present in a gas sample drawn from the patients’s airway. The anesthetic agents are identified from a set of known anesthetic gases.

Isoflurane

Enflurane

Halothane

Sevoflurane

Desflurane

Measurement Principle

Sample gas passes through the agent identification head where the absorption characteristics of the gas are measured. This is done using NDIR technology as described in *General Measurement Principles*. The head outputs analog signals and sends them for processing to identify the anesthetic agent.

Data averaging is used to ensure accurate measurements when agent concentrations are low. The information used to calculate the concentrations of the three agents includes:

- The preamplified outputs from the IR detector.
- The thermistor output from the agent identification head.
- Zero calibration constants.

O_2 Sensor

Specifications

Weight	335 g (0.75 lbs)
Size (HxWxD)	54 x 54 x 56 mm
Calibration	**Zero:** Room Air **Span:** Suitable calibrated mixture

Measurement Principle

The O_2 sensor uses a fast O_2 measurement technique that utilizes O_2 paramagnetic properties.

Two sealed spheres forming a dumb-bell assembly are filled with N_2. The dumb-bell assembly is suspended in a symmetrical non-uniform magnetic field. The spheres take up a position away from the most intense part of the field, due to the diamagnetic force on the dumbbells. The dumb-bell assembly is then surrounded by the sample gas.

When the surrounding sample gas contains O_2, the dumb-bell spheres are forced even further out of the magnetic field by the relatively stronger paramagnetic O_2 gas. The torque acting on the dumb-bell is proportional to the paramagnetism of the surrounding gases, and can therefore be taken as a measure of the oxygen concentration.

This torque is measured by monitoring the current required in a servo system that attempts to return the dumb-bells to their normal position.

Infrared Measurement Assembly

The measurement assembly measures the IR light absorption of the gases in its sample cell (see Figure 4).

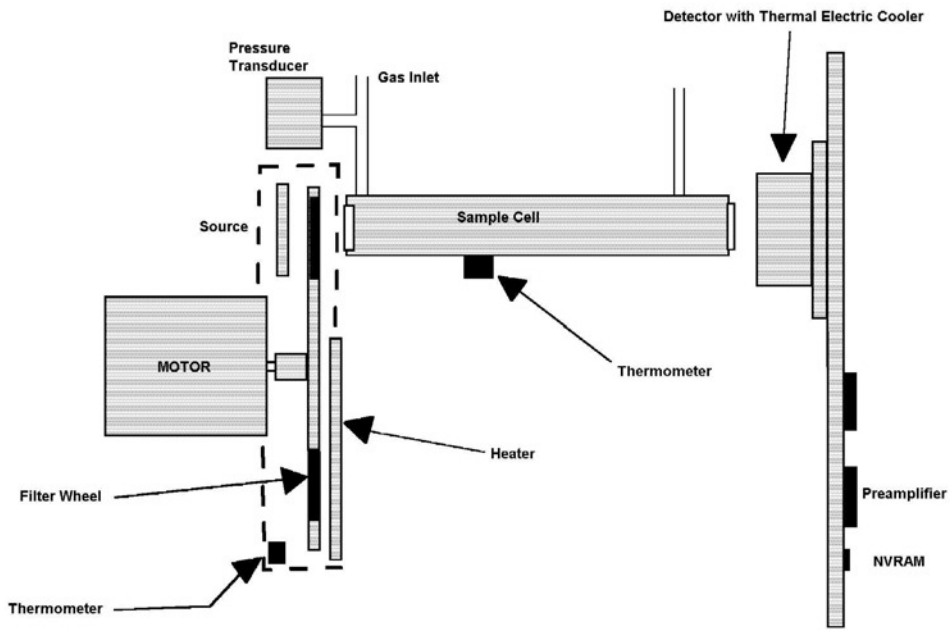

Figure 4 Anesthetic Gas Module Measurement Assembly

The measurement assembly contains the following subassemblies:

IR Source:	The ceramic IR source is heated to 600°C by applying a constant drive voltage across it.
Filter Wheel Assembly:	The filter wheel assembly includes IR filters for the anesthetic agent, CO_2, N_2O and a reference channel. A blank segment (dark period) marks the beginning and end of the filter series.
Sample Cell:	The sample cell is a stainless steel tube. It has non-IR absorbing sapphire windows at both ends, and barbed inlet and outlet ports. The inlet and outlet ports are placed as close as possible to the windows so that the gas flows effectively through the cell.
Preamp Assembly	The preamplifier board assembly includes an IR detector, an IR-detector thermistor, a TE cooler, and a pre-amplification circuit. The output from the preamplifier is a stream of pulses; this pulse train has one pulse for each IR filter, and is terminated by a blank period (dark level phase) (see Figure 5).

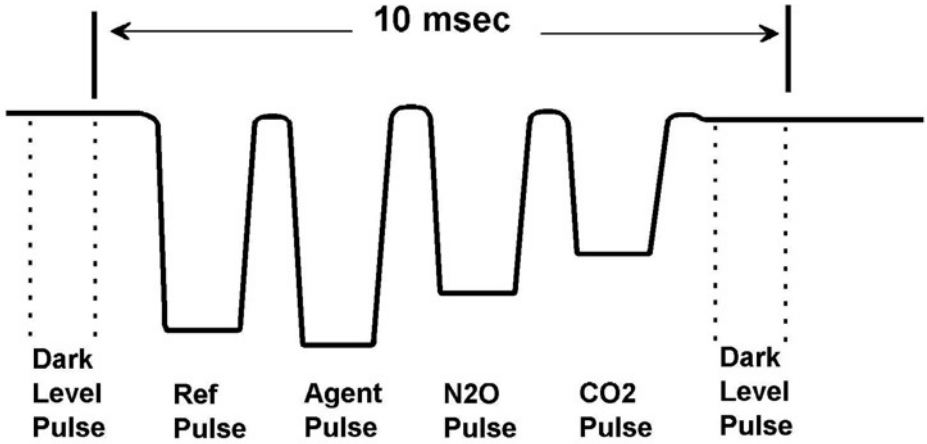

Figure 5 IR Detector Output Signal

Installation and Patient Safety

This chapter describes how to install the Philips M1026A Anesthetic Gas Module. It details the operating environment required by the Philips M1026A Anesthetic Gas Module as well as instructions on how to affix the local language labels and physically connect it to the monitor. Next, the patient safety information is detailed. Finally, this chapter describes the software setup required and any post-installation checks that have to be performed before using the Philips M1026A Anesthetic Gas Module together with a reminder of the preventive maintenance (PM) checks and their frequencies.

Where post-installation procedures are specific to installation, they are described in full in this chapter. For procedures which are also used in other situations (for example calibration, preventative maintenance, etc.), a reference to the description will be given.

Physical Installation

This section describes the operating and storage environment for the Philips M1026A Anesthetic Gas Module, affixing the local-language labels, connecting to the monitor, and fitting the gas exhaust return system.

CAUTION The Philips M1026A Anesthetic Gas Module must be positioned horizontally on a level surface. To avoid condensed water collecting in the patient sample tube, it is recommended that the Philips M1026A Anesthetic Gas Module is positioned at or above patient level, wherever possible.

Environment

WARNING Possible explosion hazard if used in the presence of flammable anesthetics.

The environment where the Philips M1026A Anesthetic Gas Module is used should be free from vibration, dust, corrosive or explosive gases, and extremes of temperature and humidity.

For a cabinet mounted installation with the monitor, allow sufficient room at the front for operation and sufficient room at the rear for servicing with the cabinet access door open.

The Philips M1026A Anesthetic Gas Module operates within specifications at ambient temperatures between 15°C and 40°C, 8 minutes after switching it on.

Ambient temperatures that exceed these limits could affect the accuracy of this instrument and cause damage to the components and circuits. Allow at least 2 inches (5cm) clearance around the instruments for proper air circulation.

CAUTION If the Philips M1026A Anesthetic Gas Module has been stored at temperatures below freezing, it needs a minimum of 4 hours at room temperature to warm up before any connections are made to it.

Make sure that the Philips M1026A Anesthetic Gas Module is free of condensation before operation. Condensation can form when equipment is moved from one building to another, thus being exposed to moisture and differences in temperature.

Label Sheet

There is a label sheet included with the Philips M1026A Anesthetic Gas Module which has the translated versions for “Airway Gases”. You can stick a translated version over “Airway Gases” on the left of the front panel. See (1) in Figure 6.

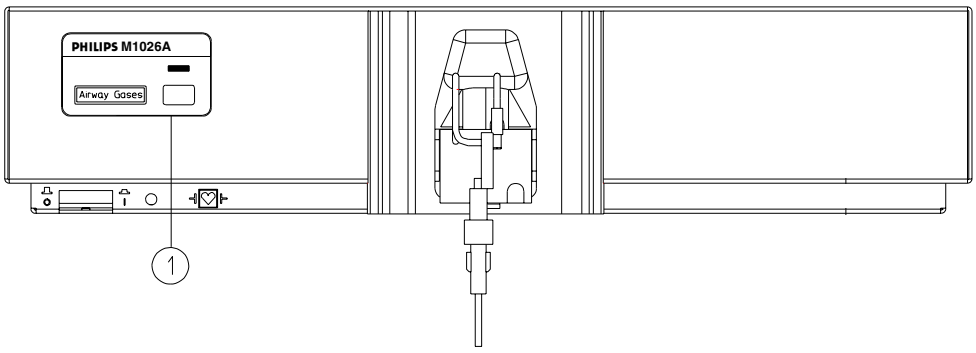

Figure 6 Label for the Philips M1026A Anesthetic Gas Module

Making Connections to the AGM

All connections to the AGM are made on its rear panel. Refer to Figure 7.

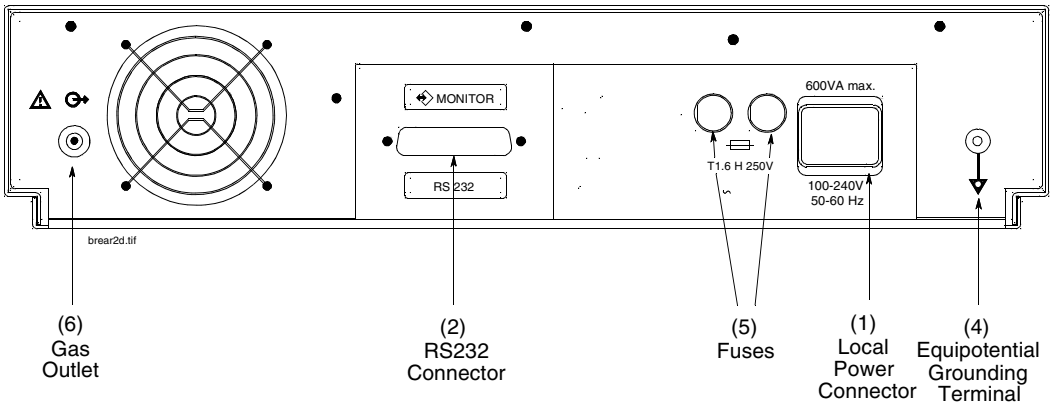

Figure 7 The Rear Panel

1 Local power connector; this is a 3-pin connector, used to connect the AGM to the local line voltage supply.

The module can be operated from an ac power source of 100 - 240 V ± 10%, 50/60 Hz. The adjustment is made automatically by the power supply inside the module.

2 RS232 Connector (RS232 Interface); this is a 25-pin "D" type connector, used to connect the AGM to the RJ45 connector of the monitor (Slot 08a, 07a, 04a, 03a, or 02a, - MIB I/O port - see *Connection of Devices via the MIB/RS232 Interface* in the *Installation Instructions* section).

The connection can be made with the following cables:

– M1026A#K11 1 m (M1026-61001)
– M1026A#K12 3 m (M1026-61002)
– M1026A#K13 10 m (M1026-61003)

3 Equipotential Grounding Terminal; this is used to connect the AGM to the hospital's grounding system.

4 Line protection fuses, T1.6 H 250V.

5 Anesthetic gas exhaust. If N_2O and/or other inhalation anesthetics are used during anesthesia, pollution of the operating room should be prevented. Once the gas sample has passed through the AGM, it should either be **returned to** or **removed from** the anesthesia circuit.

Sample Gas Connections to the Gas Exhaust

Returning the Gas Sample

You will need the following equipment to **return** the gas sample to the anesthesia circuit:

Equipment	Part Number	Comments
Gas Exhaust Return Line	M1655A	Tubing includes two parts: Tube A = 50cm long Tube B = 3m long
Gas Exhaust Return Filter	M1656A	Single patient use only

NOTE The M1655A may not be available in all countries.

Setting Up the Gas Return

(see diagram Figure 8)

1 Fit the **male** luer lock connection (2) of the **shorter** tube, to the **female** side of the M1656A Gas Exhaust Return Filter.

2 Fit the **female** luer lock connection (3) of the **longer** tube, to the **male** side of the M1656A Gas Exhaust Return Filter.

3 Fit the open end (7) of the **longer** tube to the AGM's Anesthetic Gas Exhaust.

4 Fit the open end (5) of the **shorter** tube to the ventilation circuit.

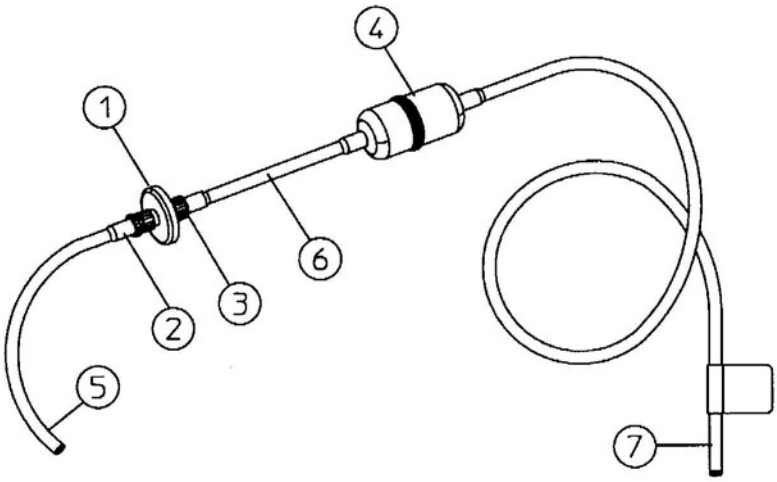

Figure 8 Setting Up the Gas Return

1 M1656A Gas Exhaust Return Filter

M1655A Gas Exhaust Return Line comprising:

2 Female luer lock

3 Male luer lock

4 Dampener

5 Shorter tube

6 Connecting tube

7 Longer tube - connected to AGM exhaust port

Removing the Gas Sample

To **remove** the gas sample from the anesthesia circuit, a scavenging system needs to be connected to the AGM's Anesthetic Gas Exhaust. If you intend to use a scavenging system with the AGM, one of the following parts must also be connected to protect it against malfunction:

1 A ventilator reservoir where the suction pressure does not exceed 0.3-0.4 mmHg or

2 A scavenging interface, properly set and maintained (see scavenging interface manufacturer's instructions).

Setup and Configuration Procedures

This section describes final setting up and configuration procedures that must be completed after the AGM is connected to the monitor and switched on but before the AGM is used for monitoring.

Altitude Configuration

The altitude setting for the monitor is important as it is used as a reference to check the AGM ambient pressure measurement.

See the Installation Instructions section for details.

Connect Sample Input Tubing

Connect the sample input tubing to the watertrap at the patient sample inlet on the water separation filter. For details, refer to the Instructions for Use.

Preventive Maintenance (PM) Tasks

The preventive maintenance (PM) tasks are described in detail in chapter 5 of this guide. Here is a short list of the PM tasks and how often they must be performed.

To ensure operation of the Philips M1026A Anesthetic Gas Module within specified limits:

1 Check the ventilator fan in the AGM for proper operation and build-up of dust and lint every **6 months**.

2 Check the AGM's calibration at least once every **12 months**, or whenever the validity of the readings is in doubt.

3 Replace the internal Nafion; tubing, room air filter, and pump filter, internal bacterial filters and watertrap manifold seals, using the PM kit, every **12 months**.

4 Test the pump using the test procedure provided in the PM Kit every **12 months**. The square-shaped pump should be cleaned before testing; the round-shaped pump may **not** be cleaned.

5 Check electrical safety (ground impedance test and enclosure leakage current test) at least every **12 months**.

All safety and maintenance checks must be made by qualified service personnel.

WARNING Failure to implement a satisfactory maintenance schedule by the individual, hospital or institution responsible for the operation of this equipment may cause equipment failure and possible health hazards.

Post-Installation Checks

See Test and Inspection Matrix for details.

WARNING Do not use the instrument for any monitoring procedure on a patient if you identify anything which indicates impaired functioning of the instrument.

Safety Requirements Compliance and Considerations

The Philips M1026A Anesthetic Gas Module complies with the following international safety requirements for medical electrical equipment:

- UL 2601-1
- IEC-60601-1
- CSA C22.2 No. 601.1-M90
- EN 60601-1
- EN 60601-1-2

Explanation of Symbols Used

⚠	Attention, consult accompanying documents.
	Indicates that the instrument is type CF and is designed to have special protection against electric shocks (particularly regarding allowable leakage currents, having an F-Type isolated (Floating) applied part), and is defibrillator proof.
	A gas output (this symbol is also used to indicate an electrical output on the monitor).

	A gas input (on the monitor this symbol can also stand for a video or 60V dc input).
	Equipotential grounding terminal.
	RS232 communication port.
	Fuse.
	Protective earth ground.
	Electrical shock hazard.

The Anesthetic Gas Module is protected against the effects of defibrillation and electrosurgery.

Power Supply Requirements

The system and the Anesthetic Gas Module can both be operated from an AC supply of 100 - 240V ±10%, 50 - 60Hz.

Grounding the System

To protect the patient and hospital personnel, the cabinet of the installed equipment has to be grounded. The equipment is supplied with a detachable 3-wire cable which grounds the instrument to the power line ground (protective earth) when plugged into an appropriate 3-wire receptacle. If a 3-wire receptacle is not available, consult the hospital electrician.

WARNING Do not use a 3-wire to 2-wire adapter.

Equipotential Grounding

Protection class 1 instruments are already included in the protective grounding (protective earth) system of the room by way of grounding contacts in the power plug. For internal examinations on the heart or the brain, Computer Module and Display Module of the System and the Philips M1026A Anesthetic Gas Module must have separate connections to the equipotential grounding system.

One end of the equipotential grounding cable (potential equalization conductor) is connected to the equipotential grounding terminal on the instrument's rear panel and the other end to one point of the equipotential grounding system. The equipotential grounding system assumes the safety function of the protective grounding conductor if ever there is a break in the protective grounding system.

Examinations in or on the heart (or brain) should only be carried out in rooms designed for medical use incorporating an equipotential grounding system.

Combining Equipment

If it is not evident from the instrument specifications whether a particular instrument combination is hazardous or not, for example, due to summation of leakage currents, the user should consult the manufacturers concerned or an expert in the field, to ensure that the necessary safety of all instruments concerned will not be impaired by the proposed combination.

Checking and Calibrating the Anesthetic Gas Module

This chapter explains how to check the Anesthetic Gas Module to ensure that it is operating within its specified limits. A list of the equipment required to carry out the checks is included, as well as step-by step instructions for the calibrations.

If you receive fail indications while testing, refer to the troubleshooting section of this chapter for guidance. If you are instructed to remove or replace parts of the Anesthetic Gas Module refer to the respective section.

Access Service Functions of the M1026A Anesthetic Gas Module

Enter service mode and select the service screen (see *Testing and Maintenance* for instructions on entering service mode). In the **`Setup Gas Analyzer`** menu you can choose whether the **`Gas Analyzer Diagnostic`** window or the **`Gas Analyzer Calibration`** window should be displayed. In this window you can as well start the flow calibration, the barometric pressure calibration and the gas span calibration.

The **`Setup Gas Analyzer`** menu can be accessed by either going to the **`Main Setup`** menu and selecting **`Gas Analyzer`**, or by pressing the setup key on the Anesthetic Gas Module.

Gas Analyzer Diagnostic		
3748A07564 C.21.01		
Compatible: Yes	Pump 5 hours	Last Zero Cal Done At
Revision Info	Diagnostic Info	28 Mar 02 15:35:56
Gas Analy. HW: 4A	Meas.Assy.: Ok	
Gas Analy. SW: 0S	MeasOpticPath: Ok	
Meas.Assy. HW: 68	Agt-ID: Ok	
Agt-ID HW: 2C	O_2 Assembly: Ok	
Agt-ID SW: 0G	Power Supply: Problem	
Agt-ID Option: 3	Pneumatic Sys: Problem	
O_2 Assembly: 2	Oper. Temp.: Ok	

Figure 9 Gas Analyzer Diagnostic Window

This window provides you with diagnostic information about the AGM. In the **`Setup Gas Analyzer`** menu select **`Service Window`** then select **`Calibration`** to access this window.

Gas Analyzer Calibration		
3748A07187 C.21.01		
Flow Normal	Flow Cal Stored	Last Zero Cal Done At 3 Apr 02 13:54:21
Measured Value	Span Cal Status	Zero Cal Status
Press 709.0 mmHg	Rejected	Passed
O_2 21.00 %	Failed	Passed
CO_2 0.00 %	Rejected	Passed
N_2O -0.20 %	Done	Passed
Subst. -0.01 %	Ongoing	Passed
	Analyzer Warmup Timer:	13 min

Figure 10 Gas Analyzer Calibration window

This window provides you with information about all calibrations that can be performed on the Anesthetic Gas Module. In the **`Setup Gas Analyzer`** menu select **`Service Window`** then select **`Diagnostic`** to access this window.

When and how to check the Philips M1026A Anesthetic Gas Module

To ensure that the Philips M1026A Anesthetic Gas Module operates with the specified limits, it must be checked:

1 After installation

2 Every 12 months ***or*** if the measurements are in doubt.

3 After repairing the AGM

If you find values outside the tolerance limits while checking, the Philips M1026A Anesthetic Gas Module must be recalibrated. Tolerance values are given at the end of each section.

The basic steps to check the Philips M1026A Anesthetic Gas Module are:

1 Enter Service Mode at the monitor and wait for first automatic zero calibration after the warm-up period.

2 Perform:

a. a leakage check

b. a flowrate check

to ensure that there are no leaks in the gas system and that the flowrates are set correctly.

3 Perform Zero calibration.

4 Check that there are no reported errors.

5 Check the Barometric Pressure calibration; perform it if necessary.

6 Check the Span calibration of gases; perform it if necessary.

7 If Barometric Pressure or Span calibrations were performed, re-perform Zero calibration.

WARNING Only perform Zero, Barometric Pressure and gas Span calibration checks when the top cover is closed. Light and electro-magnetic interference can affect the measurements.

Equipment required for checking

The following equipment is required for checking the AGM. Part numbers are given in the Parts List section.

1 Electronic Flowmeter M1026-60144 (Instructions are provided with the flowmeter. See also Service Note M1026A-034).

2 Span Calibration Equipment.

– Calibration Gas.

– Calibration Tubing

WARNING Philips Calibration Gas contains Halocarbon 22. Halocarbon 22 is represented in the Calibration menu by “Substitute”, which is the default. If you are using another calibration gas, this must be selected in the menu.

Checks and adjustments

The following sections explain the steps needed to carry out the checks and adjustments. A complete check and calibration procedure requires approximately 45 minutes, including waiting time.

NOTE Make sure that the watertrap is attached.

Performance Leakage Check

Complete the following steps to do a performance leakage check:

NOTE Do not perform the leakage check while a Zero calibration is running.

1. Switch on the Philips M1026A Anesthetic Gas Module and the monitor.
2. Wait until the Anesthetic Gas Module enters the warm up phase.
3. Connect a flowmeter to the exhaust outlet of the Philips M1026A Anesthetic Gas Module.
4. Connect the watertrap to the watertrap manifold.
5. Note the flowrate.
6. Block the gas inlet at the watertrap inlet connector (use your fingertip).

   The reading at the flowmeter should decrease to Zero (see table below). If it does not, systematically block the pneumatic path at various points before the pump to isolate the leakage point. (See Figure 2, "Pneumatic System" for tubing connections.) When the fault has been corrected, repeat the leakage check.
7. Connect the flowmeter to the inlet.
8. Note the flowrate.
9. Block the Anesthetic Gas Module exhaust (using your finger tip).
10. Check the effect of blocking the exhaust.

    The reading at the flowmeter should decrease to Zero (see Table 4-1). If it does not, systematically block the pneumatic path at various points after the pump to isolate the leakage point. (See Figure 2, "Pneumatic System" for tubing connections.) When the fault has been corrected, repeat the leakage check.

Items	Value / Tolerance
Leakage	Range: 0 → 4 ml/min

Performance Diagnostic Check

Complete the following to do a performance diagnostic check:

1 Enter the service mode of the monitor and let the Philips M1026A Anesthetic Gas Module complete the warm-up phase (the **GA WARMUP** INOP disapears).

2 Make sure that the watertrap is attached.

3 In the **Setup Gas Analyzer** menu select **Service Window** then select **Diagnostic** to access the **Gas Analyzer Diagnostic** window.

4 Check that no permanent problems are reported for the Philips M1026A Anesthetic Gas Module in the **Gas Analyzer Diagnostic** window.

Performance Flowrate Check

Always perform a leakage check before the flowrate check. Three flowrates need to be checked in the following order:

1 Total flow in **Purge** mode.

2 Flow in **Measurement Path** in **Normal** mode.

3 Total flow in **Normal** mode.

These flowrate checks are described in the following three procedures.

The total flow is measured by connecting the flowmeter to the exhaust, the measurement path flow is measured by connecting the flowmeter to the gas inlet with a special test fixture.

The Flowrate values are summarized in the following table:

Total Flowrate	Value
Purge	310 ml/min
Normal	150 ml/min

NOTE Do not perform the flowrate check while a Zero calibration is running.

Total Flowrate Check and Adjustment in Purge Mode

To make the flowrate measurements and any necessary adjustment:

1 Enter the service mode of the monitor and let the Philips M1026A Anesthetic Gas Module complete the warm-up phase (the **GA WARMUP** INOP disapears).

2 In the **Setup Gas Analyzer** menu select **Service Window** then select **Calibration** to access the **Gas Analyzer Calibration** window.

3 Enter the **Setup Gas Analyzer** menu and select **Start Flow Cal**.

4 Select **Flow Rate**.

5 Select **Purge** for purge flow (310 ml/min).

6 Connect a flowmeter to the exhaust port of the Philips M1026A Anesthetic Gas Module.

7 Note the actual flowrate by following the instructions accompanying the flowmeter. If the actual flowrate is outside the tolerance, it must be adjusted. If no adjustments are required, select **`Stop Flow Cal`**.

Total Flowrate in Purge Mode	Tolerance
310 ml/min	+/- 15 ml/min

Flowrate Adjustment:

8 Remove the Philips M1026A Anesthetic Gas Module top cover (see "The Top Cover" on page 64)

9 Correct the flowrate by adjusting potentiometer **`R125`** on the Main PC board until the required value is achieved.

Flowrate Calibration:

10 If you have made adjustments you must save the settings. Therefore select **`Store Flow Cal`** and confirm when prompted.
The system then runs through various flowrates and switches the pump off before it saves the values internally.
The flow display in the **`Calibration`** window reflects these changes and the status "Flow Cal Stored" appears.

11 Disconnect the flowmeter from the exhaust port.

Measurement Path Flowrate Check and Adjustment

The flowrate of the measurement path is checked using a test fixture in the form of a modified watertrap. In order to perform the flow rate check, the following equipment is required:

- Flow Split Test Tool M1026-60136
- Electronic Flowmeter M1026-60144

NOTE

1 Check that the test fixture is still valid for use. It must be less than two years old. The test fixture is labelled with a "Received" date that needs to be filled in when the test fixture is received.

2 The flow value that is labelled on the test fixture is to be used to perform the measurement path flowrate check. It is only valid for this test fixture.

3 Check the test fixture visually for leaks. Regularly perform a leakage check with the test fixture attached instead of the watertrap. Block both lines (drainage and measurement) at the same time while performing the leakage check. Block the measurement line with a luer cap or a similar device and the drainage line with your fingertip. If a leak exists, replace the test fixture.

WARNING Always handle the test fixture carefully and avoid contact with dust. Do not change or modify the test line/loops as this can change the flow resistance.

Make sure that there are no sharp bends or kinks in the tubing that leads to the test fixture. If a kink is visible, replace the fixture and use the new one.

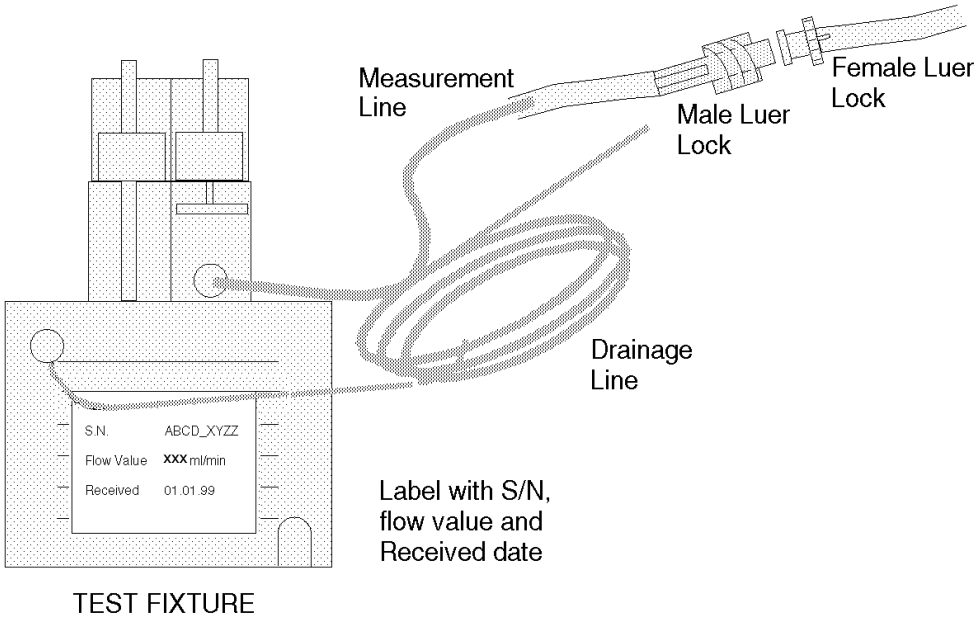

To make the flowrate measurements and any necessary adjustment:

1 Enter the service mode of the monitor and let the Philips M1026A Anesthetic Gas Module complete the warm-up phase (the **GA WARMUP** INOP disapears).

2 In the **Setup Gas Analyzer** menu select **Service Window** then select **Calibration** to access the **Gas Analyzer Calibration** window.

3 Enter the **Setup Gas Analyzer** menu and select **Start Flow Cal**.

4 Select **Flow Rate.**

5 Select **Normal**for normal flow (150 ml/min).

6 Remove the watertrap from its manifold and connect the flow split test fixture to the Philips M1026A Anesthetic Gas Module.

7 Connect the measurement line of the test fixture to the flowmeter using the mal Luer Lock.

Check:

8 Note the actual flowrate by following the instructions accompanying the flowmeter. If the actual flowrate is outside the tolerance, it must be adjusted. The target value for the flow is labelled on the test-fixture. If no adjustments are required, select **Stop Flow Cal**.

Measurement Path Flowrate	Tolerance
Value labelled on Test Fixture	+/- 3 ml/min

Flowrate Adjustment:

9 Remove the Philips M1026A Anesthetic Gas Module top cover (see the respective section in this manual)

10 Correct the flowrate by adjusting potentiometer **R126** on the Main PC board until the required value is achieved.

Flowrate Calibration:

11 If you have made adjustments you must save the settings. Therefore select **Store Flow Cal** and confirm when prompted.
The system then runs through various flowrates and switches the pump off before it saves the values internally.

12 Disconnect the flowmeter from the test-fixture.

13 Replace test-fixture with watertrap

Total Flowrate Check in Normal Mode

To make the flowrate measurements and any necessary adjustment:

1 Enter the service mode of the monitor and let the Philips M1026A Anesthetic Gas Module complete the warm-up phase (the **GA WARMUP** INOP disapears).

2 Enter the **Setup Gas Analyzer** menu and select **Start Flow Cal**.

3 Select **Flow Rate**.

4 Select **Normal** for normal flow (150 ml/min).

5 Connect a flowmeter to the exhaust port of the Philips M1026A Anesthetic Gas Module.

Check:

6 Note the actual flowrate by following the instructions accompanying the flowmeter. If the actual flowrate is outside the tolerance, check all tubing for occlusions (for example kinks, dirt) and replace if necessary. Repeat flowrate check. If the flowrate is still no within tolerance, exchange the Nafion tubing, bacterial filters and restrictor in the drainage path (provided with the Internal Tubing Kit and the Preventive Maintenance Kit) before repeating flowrate check.
If no adjustments are required, select **Stop Flow Cal**.

Total Flowrate in Normal Mode	Tolerance
has to be between	132 ml/min 170 ml/min

7 Disconnect the flowmeter from the exhaust port.

Zero Calibration

NOTE Only perform a zero calibration with the top cover closed. Light and electro-magnetic interference may affect the measurements. Zero calibration is not possible during warm-up.

Complete the following to perform a zero calibration in service mode:

1 In the **Setup Gas Analyzer** menu select **Service Window**.

2 Select **Calibration** to access the **Gas Analyzer Calibration** window.

3 In the **Setup Gas Analyzer** menu select **Zero Cal** and press **Confirm** when prompted to.

4 Wait until zero calibration is complete. In the **Gas Analyzer Calibration** window a **OK** / **Failed** indication is displayed against each channel. If a **Failed** indication cannot be cleared by another zero calibration refer to the appropriate section of this manual and correct the fault. Then repeat this procedure.

Barometric Pressure Check and Calibration

For this calibration you need the absolute barometric pressure at your hospital location. Normally this value can be provided by the hospital as it is needed in the laboratory.

If the hospital cannot provide an accurate value for the barometric pressure, call the local airport or weatherstation. Since airports and weatherstations normally provide you with a pressure that has been corrected to sea level, ensure that the value you are given is an uncorrected absolute barometric pressure reading! The following table shows you typical barometric pressures at various altitudes.

Altitude	Typical Barometric Pressure	Altitude	Typical Barometric Pressure	Altitude	Typical Barometric Pressure
0 m	760 mmHg	1100 m	664 mmHg	2200 m	577 mmHg
100 m	751 mmHg	1200 m	656 mmHg	2300 m	570 mmHg
200 m	742 mmHg	1300 m	648 mmHg	2400 m	562 mmHg
300 m	733 mmHg	1400 m	639 mmHg	2500 m	555 mmHg
400 m	724 mmHg	1500 m	631 mmHg	2600 m	548 mmHg
500 m	715 mmHg	1600 m	623 mmHg	2700 m	540 mmHg
600 m	707 mmHg	1700 m	616 mmHg	2800 m	533 mmHg
700 m	698 mmHg	1800 m	608 mmHg	2900 m	526 mmHg
800 m	689 mmHg	1900 m	600 mmHg	3000 m	519 mmHg
900 m	681 mmHg	2000 m	592 mmHg		
1000 m	672 mmHg	2100 m	585 mmHg		

If only a corrected (to sea-level or 0 meters) reading is available, uncorrect the reading for the altitude you are on using the following equation:

$$p_{barometric} = p_{corrected} \times \frac{p_{typical}}{760\text{mmHg}}$$

where:

$p_{corrected}$ = ambient air pressure corrected to sea-level

$p_{typical}$ = typical atmospheric pressure at a given altitude

Conversion: 1 mmHg = 1.33 hPa = 0.03937 inHg

NOTE Only perform a Barometric Pressure check and calibration with the top cover closed. Light and electro-magnetic interference may affect the measurements. Pressure calibration is not possible during warm-up.

Complete the following to steps to perform a barometric pressure check and calibration:

1 Get the absolute barometric pressure at your hospital location.

2 Enter the service mode of the monitor and let the Philips M1026A Anesthetic Gas Module complete the warm-up phase (the **GA WARMUP** INOP disapears).

3 In the **Setup Gas Analyzer** menu, select **Service Window**.

4 Select **Calibration** to access the **Gas Analyzer Calibration** window.

Check:

5 Check if the barometric pressure displayed next to the **Press** label. in the calibration window is within the tolerance limits. A zero calibration is automatically started in order to display the calibrated pressure value. This value is updated with each following zero calibration.

Measured Value	Tolerance
Barometric Pressure	+/- 5 mmHg

Calibration:

6 Enter the **Setup Gas Analyzer** menu and select **Start Press. Cal**.

7 Select the value representing the current absolute barometric pressure and confirm when prompted

8 After calibration has been completed, check if the barometric pressure displayed next to **Press.** in the calibration window is within the tolerance limits.

Span Calibration Check

NOTE The Philips M1026A Anesthetic Gas Module should run for at least 30 minutes before continuing with the following calibration procedures. This is to allow the module to reach a stable measurement condition. The Analyzer Warmup timer in the Calibration window indicates the time span since the last power on.

Only perform Span calibration checks when the top cover is closed. Light and electro-magnetic interference can affect the measurements.

Before performing a Span calibration check, you ***must*** first perform:

- Performance Leakage Check.
- Performance Diagnostic Check.
- Performance Flowrate Check .
- Zero Calibration Check .
- Barometric Pressure Calibration Check .
- Ensure that there is enough gas in the calibration gas bottle.
- Check tubing assembly.

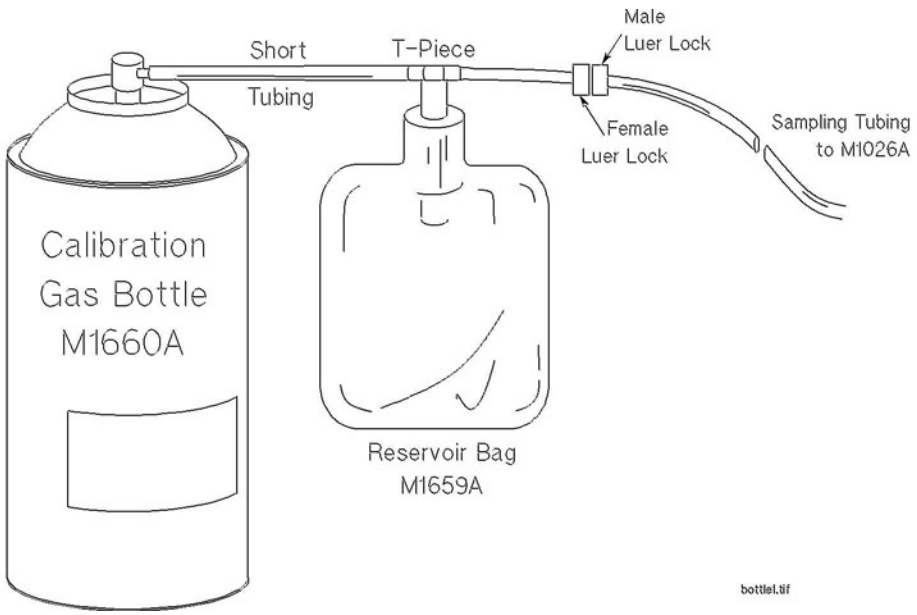

Figure 11 Span Calibration Equipment including Gas Canister and Spray Valve

CAUTION Ensure that the room you are working in is well-ventilated, and that the Philips M1026A Anesthetic Gas Module exhaust is properly connected to the gas scavenging system.

1. In the **`Setup Gas Analyzer`** menu select **`Service Window`**.
2. Select **`Calibration`** to access the **`Gas Analyzer Calibration`** window.
3. Select the **`Select Cal Agent`** item from the **`Setup Gas Analyzer`** menu.
4. Pre-select the agent that is being used during calibration. If Halocarbon 22 is in use, select **`Subst.`**.
5. Connect the calibration gas bottle, the reservoir bag and the sample line as shown in Figure 11, "Span Calibration Equipment including Gas Canister and Spray Valve".
6. Wait until the **`GA OCCLUSION`** INOP appears on the monitor. Now wait for another 10 seconds to let the Anesthetic Gas Module completely evacuate the reservoir bag.
7. Now fill the reservoir bag with gas.

CAUTION Do not pressurize the reservoir bag.

Do not attempt the calibration process if tere are any visible leaks in the bag or tubing.

Prevent the bag from emtying before the calibration procedure is complete.

Check

8 Check if the readings for the different gases in the **Gas Analyzer Calibration** window are within the specified tolerance limits.

Gas	M1660A value	Tolerance Limits
O_2	52%	+/- 1.0%
CO_2	5%	+/- 0.1%
N_2O	40%	+/- 2.0%
Anesthetic Agent or Halocarbon 22 as substitute	3%	+/- 0.1%

9 Perform a span calibration for each gas that you find out of its tolerance limits.

Calibration

10 In the **Setup Gas Analyzer** menu select the calibration item for each gas that you want to calibrate. You must have completed the flow adjusment in order to perform these calibrations. The different items are:
Start O_2 Cal
Start CO_2 Cal
Start N_2O Cal
Start Agent Cal

11 .Select the concentration of the appropriate gas in your test gas and confirm when prompted to.

12 Wait for the calibration to finish. Check that in the **Gas Analyzer Calibration** window a **Done** indication is displayed against the gas that you wanted to calibrate. If not, repeat the span calibration for this gas.
If you still get a failure refer to the troubleshooting section of this chapter and correct the fault. Then repeat span calibration.

13 Repeat steps 10 to 12 until all the gases that were out of tolerance are calibrated.

14 If any calibration was necessary, perform a zero calibration and repeat the Span Calibration Check.

15 Remove the calibration gas from the system and purge with room air for 10 seconds. Then check that the values in the **Gas Analyzer Calibration** window reflect the concentrations present in room air inside the tolerance limits:
O_2 at 20.9% +/- 0.2%
CO_2 at 0% +/- 0.1%
N_2O at 0% +/- 0.3%
Agent at 0% +/- 0.1%
If this is not the case, repeat all calibration checks and procedures.

These values are valid for the Philips M1660A Calibration Gas Mixture.

For other calibration gas mixtures use the values specified for the mixture, applying the same tolerance limits as given in this table for the Philips mixture (for example Japanese users should calibrate the Anesthetic GAs Module using the DOT29M1060 gas mixture of Schott Medical Products).

Disposal of Empty Calibration Gas Cylinder

1 Empty cylinder completely by pushing in the pin of the valve.

2 Once the cylinder is empty, drill a hole in the cylinder

CAUTION Be careful to assure that the cylinder is completely empty before you try to drill the cylinder.

3 Write "Empty" on the cylinder and place it with your scrap metal or, if you do not collect scrap metal for recycling, dispose of the cylinder.

Maintaining the Anesthetic Gas Module

WARNING Failure to implement a satisfactory maintenance schedule by the individual, hospital or institution responsible for the operation of this equipment may cause equipment failure and possible health hazards.

This chapter describes the **Preventive Maintenance** tasks (PMs) required to keep the Philips M1026A Anesthetic Gas Module in good working order. PMs are performed to a timetable before problems arise as a means to reduce failures.

Where a PM requires either a calibration or replacement procedure, you will be referred to the relevant chapter of this guide. The PMs are listed, within a table, in ascending order of the frequency they are performed.

All checks that require the instrument to be opened must be made by qualified service personnel.

CAUTION Take precautions when dealing with potentially contaminated parts, such as tubing and other components of the patient circuit. Wear gloves, mask and gown while handling components that come into contact with the patient's exhalant gas or fluids.

Preventive Maintenance (PM) Tasks

Here is a list of the PM tasks required to ensure satisfactory operation of the Philips M1026A Anesthetic Gas Module within its specified limits and how often they must be performed.

- Check the ventilator fan in the AGM for proper operation every **6 months**.
- Check the AGM's calibration at least once every **12 months**, or whenever the validity of the readings is in doubt. Refer to *Checking and Calibrating the Anesthetic Gas Module* for details.
- Replace the internal Nafion tubing, room air filter, and pump filter, two internal bacterial filters, and two watertrap manifold seals using the PM kit, every **12 months**.
- Test the pump using the test procedure provided in the PM Kit every **12 months**. If the test fails, replace the pump.
- Check electrical safety (ground impedance and enclosure leakage current test) at least every **12 months**.

Cleaning

Each time the top cover is removed from the AGM for repair or calibration, you should take the opportunity to clean the inside of the module, as the fan may draw debris such as dust and lint into the enclosure.

WARNING Switch off the instrument and disconnect it from the mains power supply. Take standard electrostatic precautions. For example, wrist strap connected to electrical ground.

The user should be encouraged to periodically clean the exterior casing of the AGM. The outside of the gas sample tubing should be cleaned before connecting to the next patient.

Replace PM Parts

Every **12 months** the PM parts should be replaced for new with the PM kit (Philips Part Number M1026-60132). The PM kit comprises an internal Nafion tubing with two internal bacterial filters, pump filter, room-air filter, and two internal bacterial filters, and two seals for the watertrap manifold.

Internal Nafion Tubing with Bacterial Filters and manifold Seals

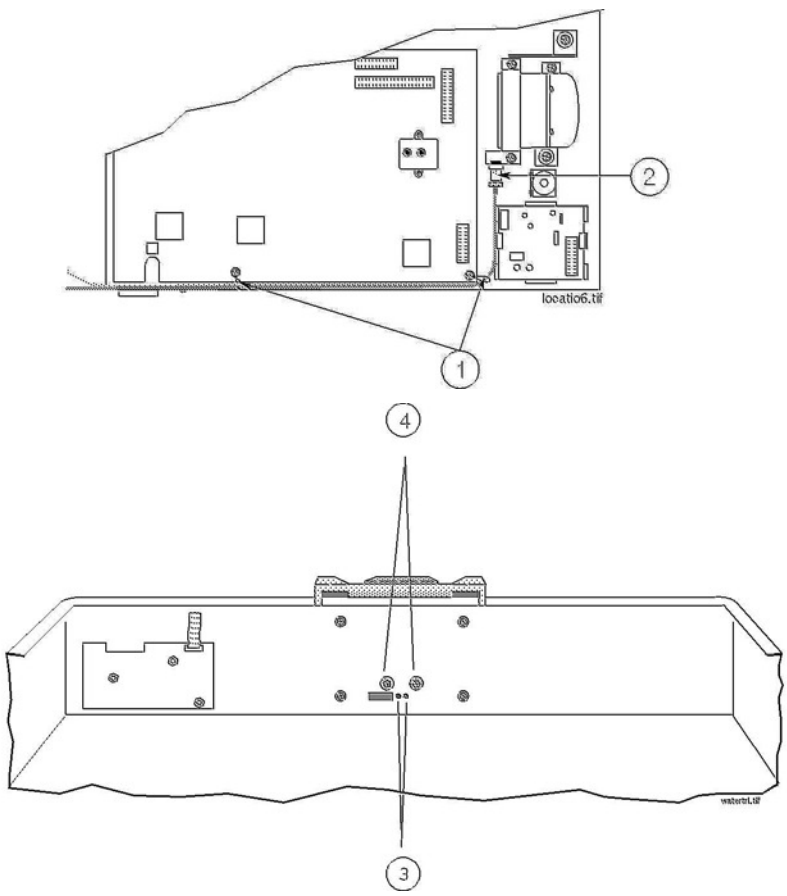

Figure 12 Removing the Nafion Tubing, Bacterial Filters and Watertrap Manifold Seals

Removal

To remove the Nafion tubing, filters and manifold seals (refer to Figure 12):

1 Ensure that the module is switched off and isolated from the mains power supply. Remove the top cover of the module. Check if the module needs cleaning (because of dust, lint, etc.).

2 Unscrew the cable clamps (1) holding the Nafion tubing in place on the main PC board.

3 Unscrew the bacterial filters (2) at the metal bracket.

4 Remove the Nafion tubing connections (3) from the watertrap manifold.

5 Remove the two screws (4) holding the watertrap manifold on the protector. The screws are accessible from the rear side of the front cover through two holes provided for this purpose.

6 Pull out the two seals from the tubing connectors of the manifold using pointed tweezers; slide one side of the tweezers between the seal and the connector, then grasp and pull.

Replacement

To replace the Nafion tubing, filters and manifold seals (refer to Figure 12):

1 Take a new seal in the tweezers and press it onto the fitting in the tubing connector. Push down on the seal using the handle of the tweezers (or another blunt instrument), taking care not to damage the seal, until it sits properly. Repeat with the second seal.

2 Screw the watertrap manifold onto the protector through the holes in the front cover.

3 Replace the Nafion tubing connection to the watertrap manifold. Take care to attach the tubing with the red mark at the end to the connector with the red marking (this indicates the “drainage” path). The gap between the end of the nafion tubing and the manifold connectors (visible through the purple connector tubing) must be less than 1mm.

4 Replace the Nafion tubing connection to the metal bracket. Screw on the bacterial filters, again matching the red markings.

5 Attach the cable clamps to the Nafion tubing (if not already attached) and screw the cable clamps onto the main PC board.

Room-Air Filter

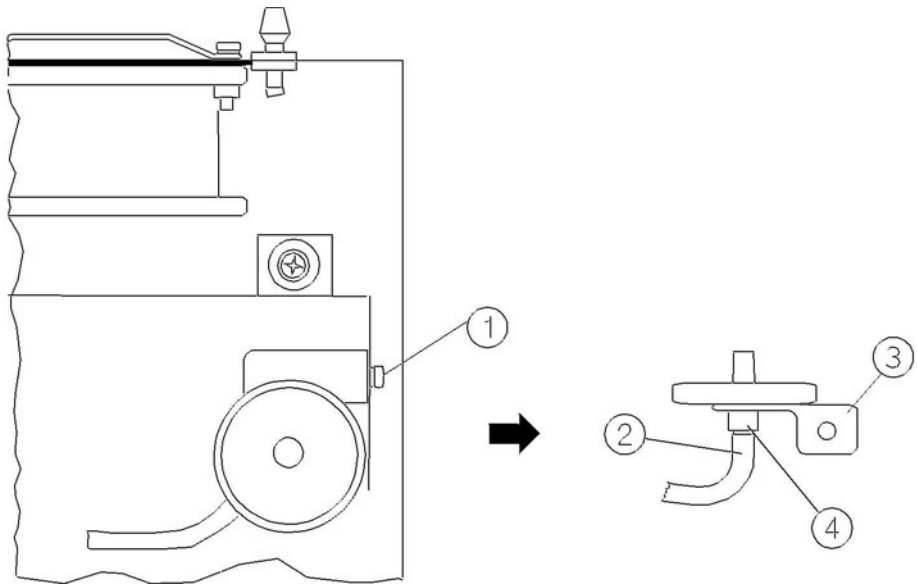

Figure 13 Removing and Replacing the Room-Air Filter

Removal

To remove the room-air filter (refer to Figure 13):

1 Using a cross-tipped screwdriver, remove the screw and washer (1) securing the room-air filter's mounting bracket.

2 Remove the pneumatic tubing (2) from the underside of the room-air filter.

3 Using a flat-tipped screwdriver, pry off the short section of tubing (4) that secures the room-air filter to its bracket (3).

4 Remove the room-air filter from its bracket.

Replacement

To replace the room-air filter (refer to Figure 13):

1 Push the room-air filter into the locating hole provided in its bracket (3).

2 Push on the short section of tubing (4) that secures the room-air filter to its bracket.

3 Replace the pneumatic tubing (2) to the underside of the room-air filter.

4 Using a cross-tipped screwdriver, replace the screw and washer (1) securing the room-air filter's mounting bracket.

Pump Filter

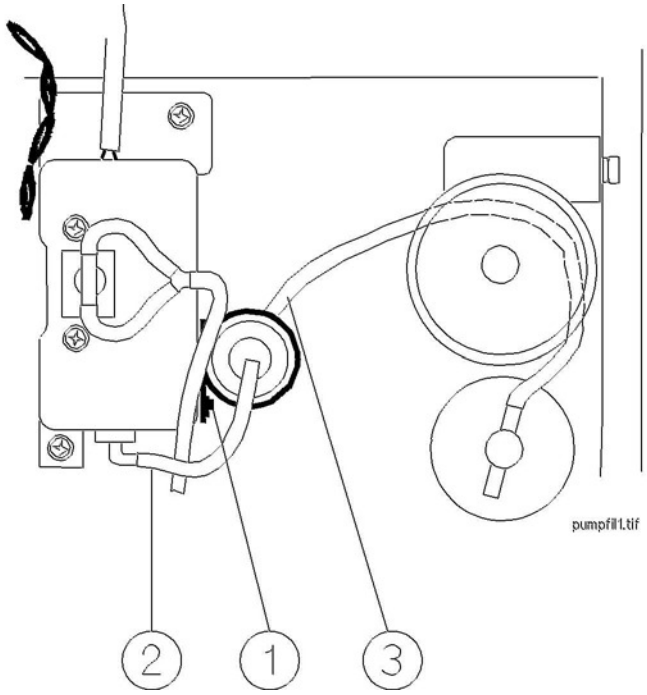

Figure 14 Removing and Replacing the Pump Filter

Removal

To remove the pump filter (refer to Figure 14):

1 Using a cross-tipped screwdriver, remove the screw securing the pump filter(1).

2 Lift the pump filter and remove the pneumatic tubing from the pump exhaust (2).

3 Press the filter out of its plastic clip and remove the tubing from the underside of the pump filter (3).

Replacement

To replace the pump filter (refer to Figure 14):

1 Connect the open tubing end that comes with the filter to the pump exhaust (2). Ensure that the elbow connector on the pump filter is connected to the pump exhaust.

2 Replace the pump filter and secure with the screw (1).

3 Pass the tubing through the clip and connect it to the underside of the filter and slide the pump filter into its plastic clip (3).

4 Replace the top cover of the module.

Performance Checks

See *Test and Inspection Matrix.*

Other factors to maximize uptime or reduce cost of ownership:

Electromechanical devices in general have limited life expectancies and failure rates higher than devices with only electronic components. Thus, lower cost electromechanical devices such as pumps and solenoids should be pro-actively considered for replacement.

We recommend exchanging the pump M1026-60330 after 6000 hours.

Changing the solenoids after 3000 hours will also maximize AGM uptime.

Any change in recommended exchange intervals will be communicated via Service Notes.

Troubleshooting the Anesthetic Gas Module

This chapter provides a recommended procedure for locating and identifying faults on the Philips M1026A Anesthetic Gas Module.

It details how to proceed when hardware or measurement related INOPs occur.

It details how to proceed when errors are flagged for:

- Failed calibration checks and procedures
- Failed diagnostic checks.

In addition, it provides flow charts for communication and measurement type problems.

Equipment needed for troubleshooting:

- Flowmeter
- Flow Split Test Kit
- PM Kit
- Multimeter
- Calibration equipment
- Tubing kit

Compatibility Criteria for the AGM and the IntelliVue Monitors

Compatibility criteria can be checked in the Gas Analyzer Diagnostic Window. For compatibility with the IntelliVue patient monitors the AGM must fulfill the follwoing requirements:

Protocol Revision: C.21.xx or greater

Agt_ID Option: 3

O_2 Assembly: 2

Flow Charts for Communication and Measurement Type Problems

The first flow chart shows three common types of problems and the identification information needed about the AGM.

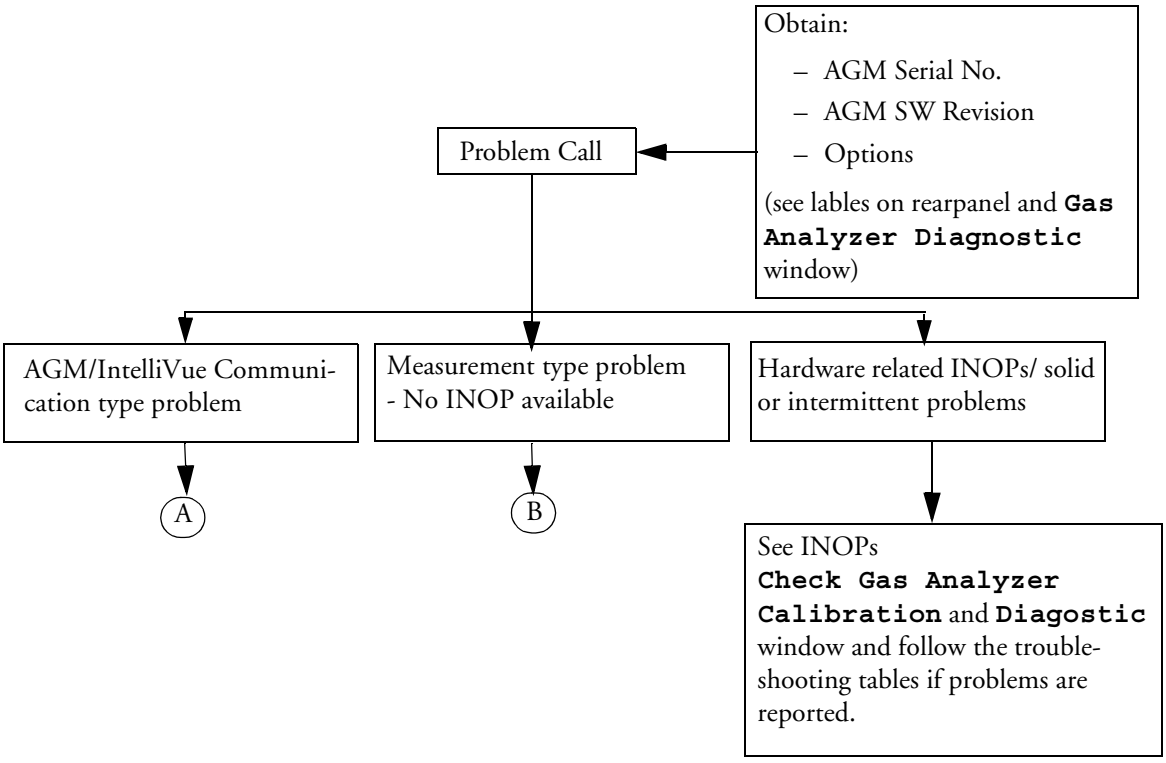

Figure 15 Troubleshooting - Problem Identification

To access the identification information, refer to the **Revision Info** column of the **Gas Analyzer Diagnostic** window

Gas Analyzer Diagnostic		
3748A07564 C.21.01		
Compatible: Yes	Pump 5 hours	Last Zero Cal Done At
Revision Info	Diagnostic Info	28 Mar 02 15:35:56
Gas Analy. HW: 4A	Meas.Assy.: Ok	
Gas Analy. SW: 0S	MeasOpticPath: Ok	
Meas.Assy. HW: 68	Agt-ID: Ok	
Agt-ID HW: 2C	O_2 Assembly: Ok	
Agt-ID SW: 0G	Power Supply: Problem	
Agt-ID Option: 3	Pneumatic Sys: Problem	
O_2 Assembly: 2	Oper. Temp.: Ok	

Figure 16 Gas Analyzer Diagnostic Window

This window gives such information as serial number, software revision and options configured:

The second flow chart continues from the first at the point **A** “Communication Problem”.

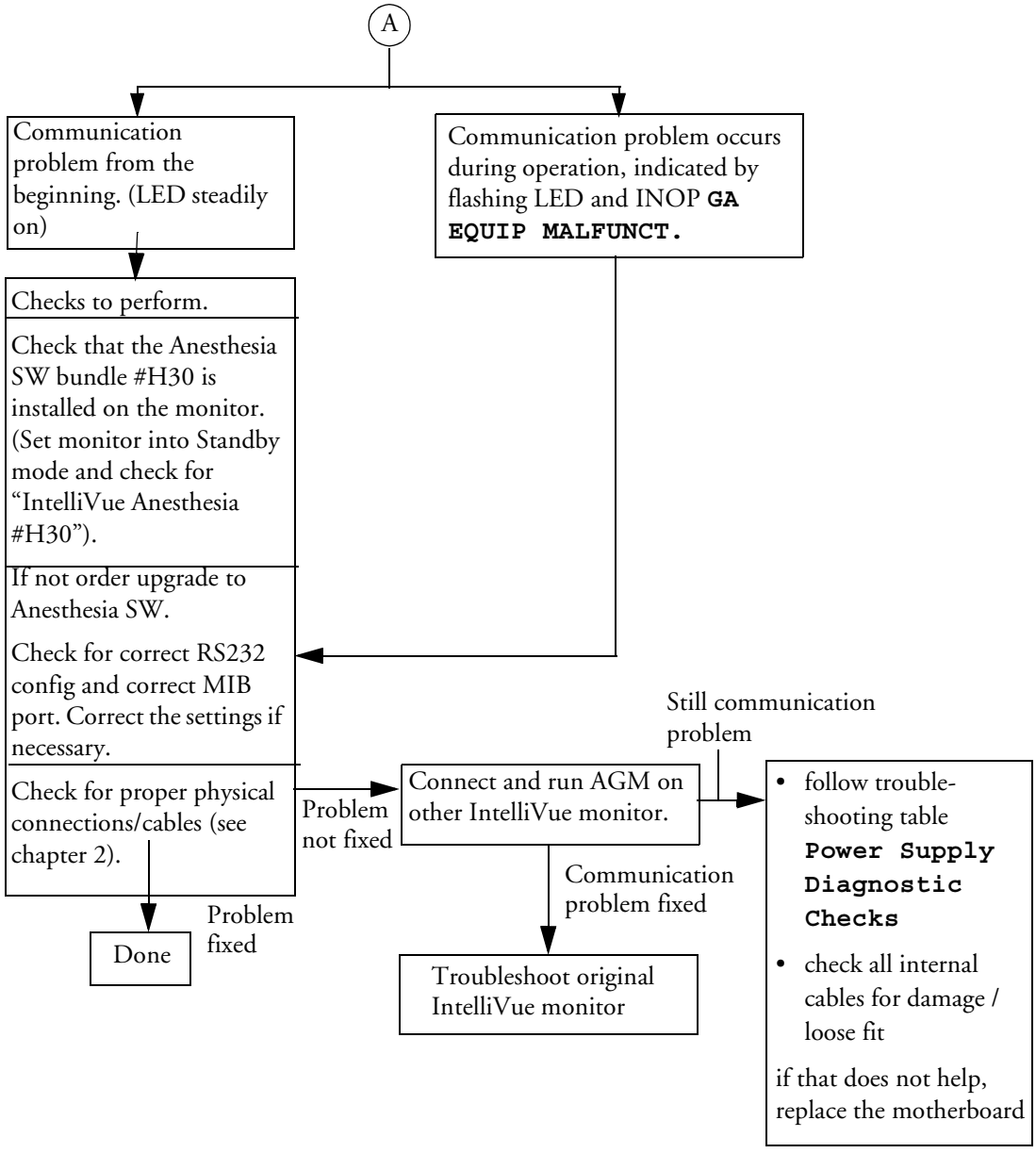

Figure 17 Troubleshooting - Communication Problems

The third flow chart continues from the first, from the point **B** “Measurement-type Problem - No INOP”.

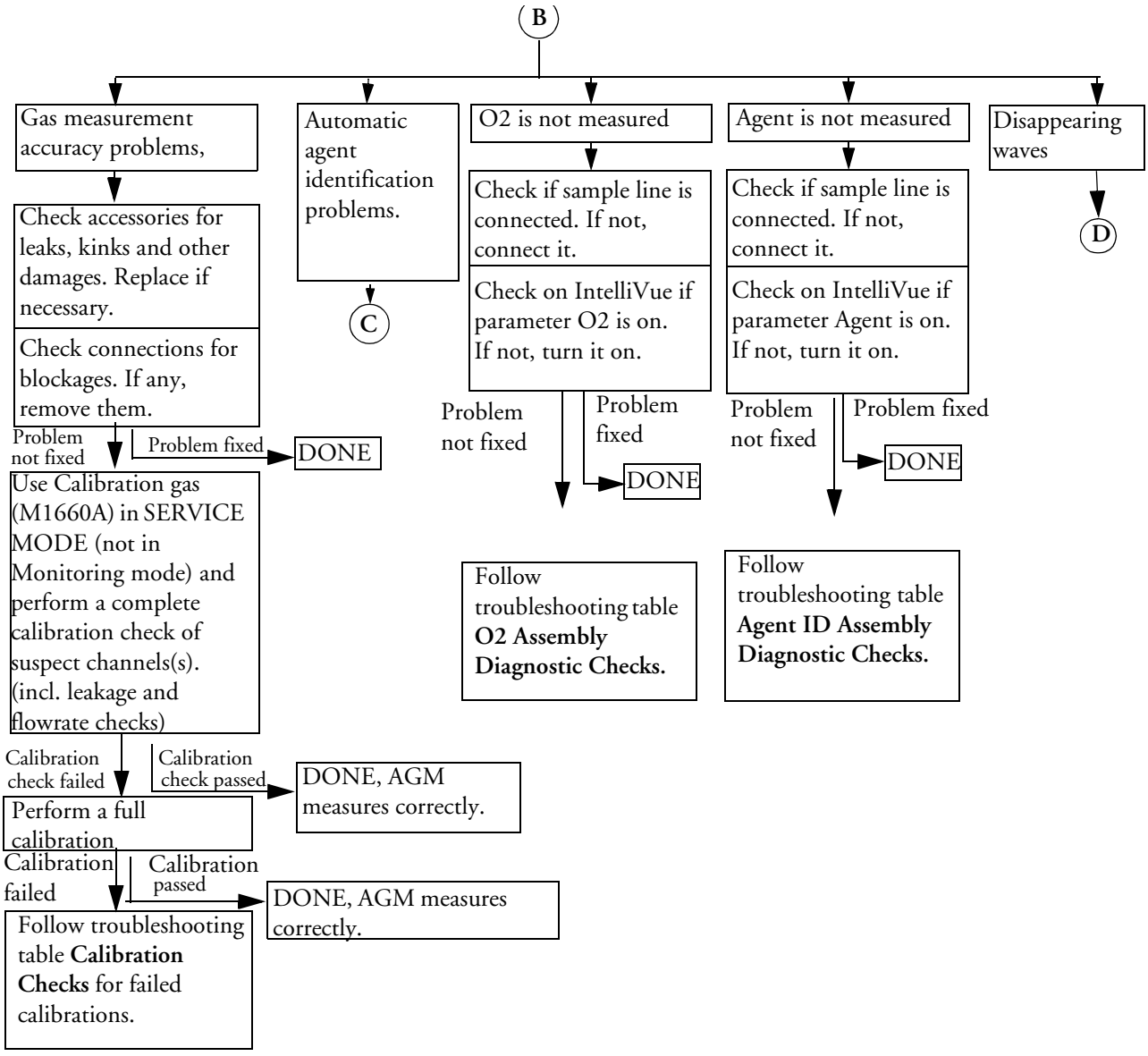

Figure 18 Troubleshooting - Measurement Problems with No INOPS

Flow charts illustrated in Figure 19 and Figure 20 follow on from here.

The fourth flow chart continues from the third, from point **C** “Agent ID Problems”:

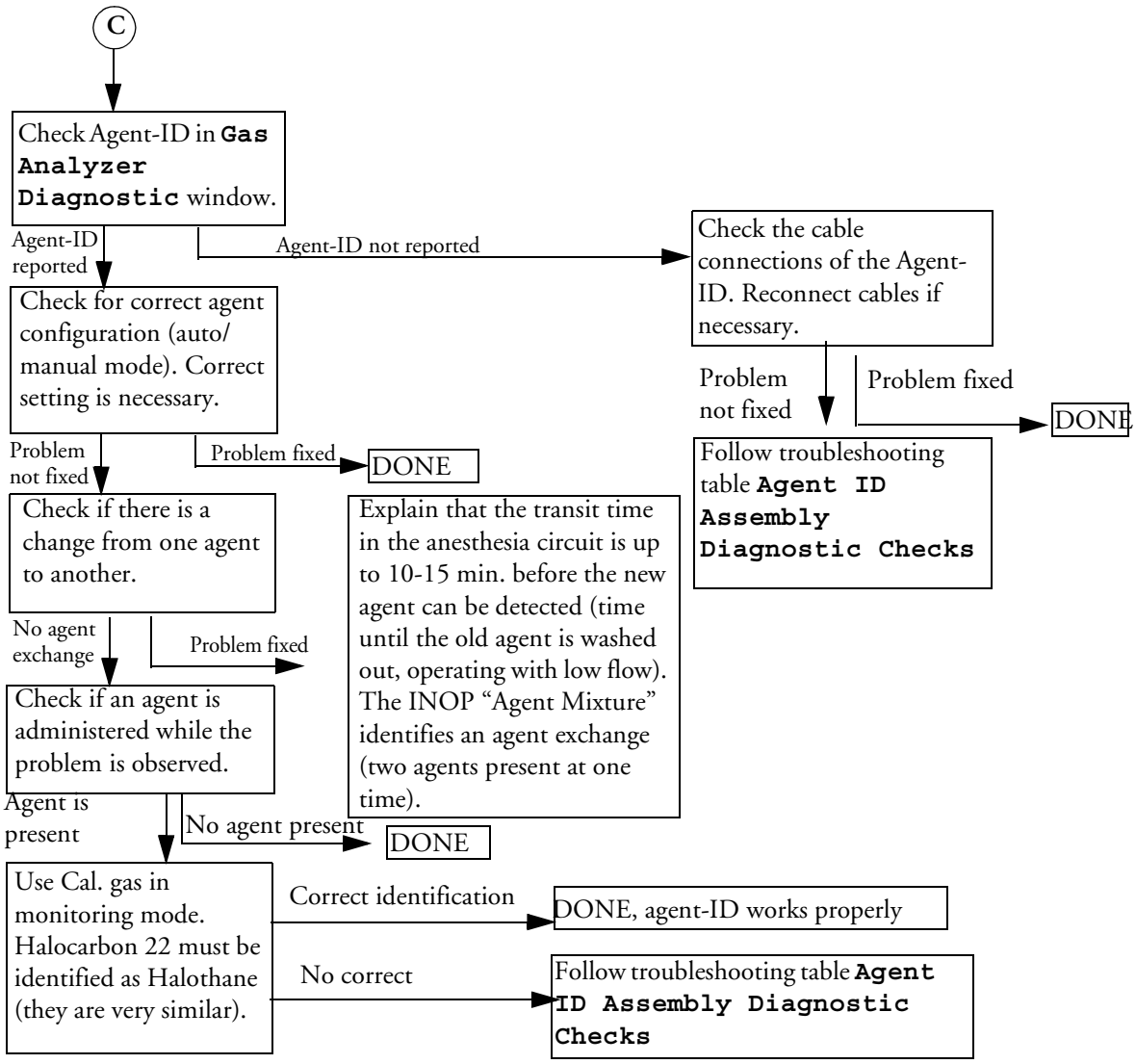

Figure 19 Troubleshooting - Agent ID Problems

The fifth flow chart also continues from the third, from point **D** “Disappearing Waves”:

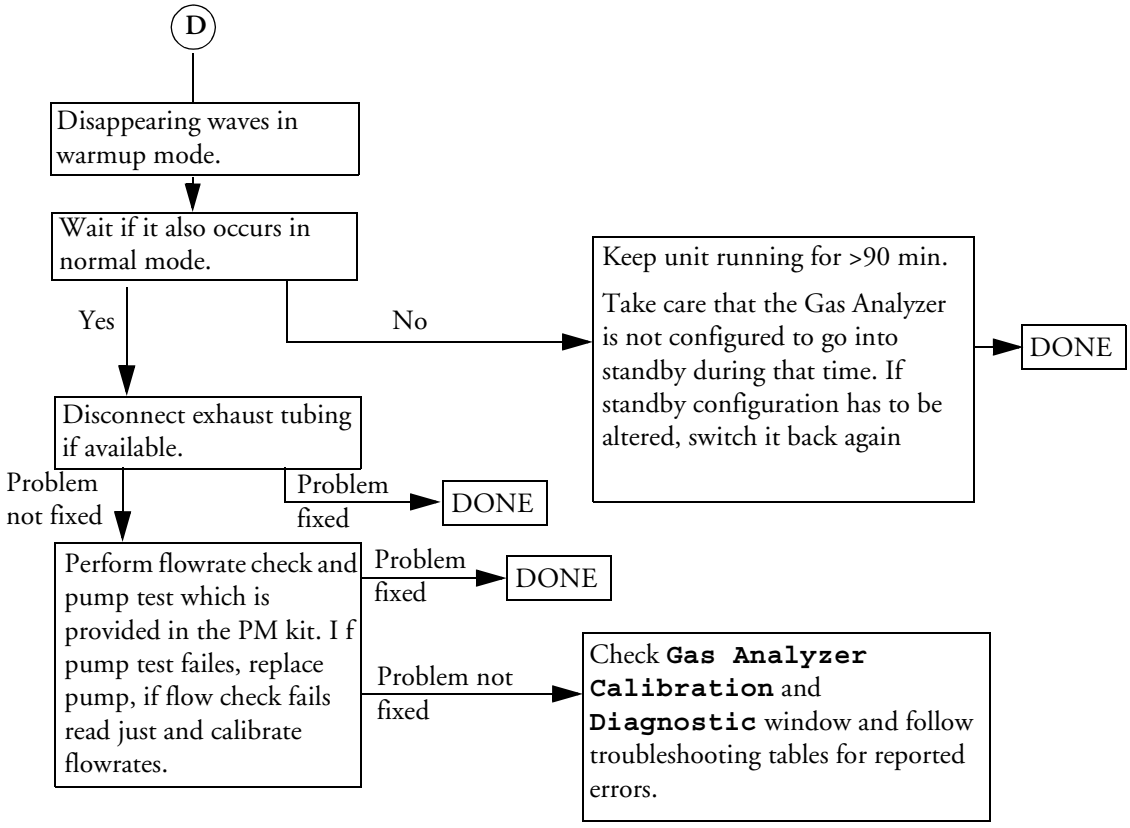

Figure 20 Troubleshooting - Disappearing Waves

Hardware Related Troubleshooting Strategy

Overall troubleshooting strategy for hardware related problems/hardware and measurement related AGM INOPs:

1 Always perform a leak and flowrate check before continuing any other troubleshooting. If any check fails, first fix leak and/or flowrate problem and repeat a zero calibration. Then check whether problems still exist.

There are only two device conditions that make it impossible to perform a leak/flowrate check:

– Pump is not running:

Check for proper electrical connection and check that AGM is not in Standby Mode. If OK, replace pump.

– INOP "GAS AN. EQUIP MALF": see “INOPs” on page 46.

2 After the first zero calibration, always check which AGM INOP’s are displayed in Monitoring Mode. Refer to “INOPs” on page 46 where you can find a listing of possible root causes and their

corrective actions to the most common hardware and measurement related AGM INOP's. Check out the possible problems in the order given in the table!

3 After the first zero calibration, always check which problems are flagged in the Gas Analyzer Diagnostic window. Troubleshoot flagged problems in the Gas Analyzer Diagnostic window following the hierarchy given in "Problem Solving Hierarchy" on page 51 and the related troubleshooting tables and/or troubleshoot zero calibration failures.

INOPs

Check out the possible problems in the order given in the following table.

INOP	Possible Problem/Cause	Corrective action
GA. NOT AVAILABLE	AGM not switched on.	Switch on AGM
	AGM not properly connected.	Check physical connections.
GA INCOMPATIBLE	This version of the AGM is incompatible with the monitor	Disconnect AGM.
GAEQUIP MALF	Either AGM - monitor connection problem, serious problem with a subassembly or Main PC Board problem.	Check RS232 connection, RS232 cable and MIB board of monitor. If ok, check whether status ("OK" or "PROBLEM") is shown in AG Diag Window. If yes, troubleshoot subassemblies according hierarchy. If status "UNKNOWN" is shown for all assemblies for more than 4 min. after Power On, replace main pcb.
	Serious IR measurement head problem.	Check IR head and replace it if necessary, check whether Service Note M1026A-035/038 applies.
GAS OCCLUSION	External occlusion (inlet or exhaust accessories).	Disconnect all external tubing/filters and check whether occlusion disappears.
	Internal occlusion	Troubleshoot internal occlusion and remove it
	Weak/defective pump	Perform pump test (provided in PM Kit M1026-60132), replace it if necessary.
	Leakage between pump and flow restrictor	Check pneumatic path between pump and flow restrictor tubing for leakages
	Flow transducer incorrectly connected to flow restrictor	Check that the transducer ports A and B on the Main PC board are connected to the correct side of the flow restrictor.

INOP	Possible Problem/Cause	Corrective action
GA ZERO FAILED	Purge Flow out of tolerance.	Adjust purge flow and calibrate flow. Repeat zero calibration.
	No flow calibration after flow adjustment.	Perform flow calibration
	Occlusion during zero calibration.	Remove occlusion.
	Solenoid 1 defective.	Replace solenoid 1.
	Measured ambient pressure does not match with configured altitude in ACMS Service Mode (tolerance is +/- 60 mmHg).	Verify correct altitude setting / pressure Cal value. If necessary, adjust it.
	IR measurement head problem.	Check IR head and replace it if necessary.
O_2 ZERO FAILED	O_2 new zero constants out of range.	Troubleshoot O_2 sensor and replace it if necessary.
AGENT IDENT ZERO FAILED	Solenoid 2 defective	Replace solenoid 2.
	Agent-ID problem.	Troubleshoot Agent-ID and replace it if necessary.
O_2 EQUIP MALF	O_2 span failed.	Check O_2 span calibration. If it fails, troubleshoot span calibration/ O_2 sensor and replace it if necessary.
	O_2 is built in, but set to digital 45%.	If O_2 value is set to digital “45%” in Service Mode, replace the O_2 sensor.
AGENT IDENT MALF	Serious Agent-ID problem.	Check Agent-ID and replace it if necessary.
XXX MEAS DISTURBED	Minor transient IR head problem	If it lasts only for a few seconds and clears itself, NO ACTION REQUIRED.
(XXX: N_2O, CO_2, agent or O_2)	(Minor transient O_2 sensor problem if XXX = O_2)	If it doesn't clear itself, troubleshoot IR head/ O_2 sensor and replace it if necessary.
GAS AN ACCURACY ?	Flow rate error.	Check flow (purge and normal), adjust and calibrate if necessary.
	No flow calibration after flow adjustment	Perform flow calibration
	Partial occlusion.	Troubleshoot for occlusion.
	IR head problem.	Troubleshoot IR head and replace it if necessary. If it lasts only for a few seconds and clears itself, NO ACTION REQUIRED
O_2 UNABLE TO MEASURE	Flow rate error.	Check flow (purge and normal), adjust and calibrate if necessary
	No flow calibration after flow adjustment	Perform flow calibration

INOP	Possible Problem/Cause	Corrective action
	O_2 data not valid.	Troubleshoot O_2 sensor and replace it if necessary.
CO_2 UNABLE TO MEASURE	CO_2 span failed / CO_2 data not valid.	Check CO_2 span calibration. If it fails, troubleshoot span calibration/ IR head and replace it if necessary.
AGT UNABLE TO MEASURE	Agent span failed / Agent data not valid.	Check agent span calibration. If it fails, troubleshoot span calibration/ IR head and replace it if necessary.
N_2O UNABLE TO MEASURE	N2O span failed / N2O data not valid.	Check N2O span calibration. If it fails, troubleshoot span calibration/ IR head and replace it if necessary.

Calibration Checks

To access the **`Gas Analyzer Calibration`** window select **`Gas Analyzer Calibration`** in the **`Setup Gas Analyzer`** menu.

A **`Passed/Failed`** indication is displayed for the Zero and the Span calibrations. Refer to the table below for possible causes of **`Failed`** indications, and their recommended corrective actions.

Calibration Checks Troubleshooting Table

Symptom	Possible Cause	Corrective Action
Zero calibration shows `Failed`/ Agent-ID Zero Calibration failed. (Agent-ID Zero failed is only seen as INOP in monitoring mode)	Solenoid or air reference filter problem.	Check the solenoid while running a Zero calibration, by feeling whether air is being pulled in at the room air filter. If not, first replace the room air filter. If the problem still persists, replace the solenoid. If Agent-ID zero calibration failed, check solenoid #2.
	Occluded pneumatics	Check for an occlusion, such as bent or collapsed tubing. Listen for a louder or higher frequency pump noise. This can indicate that the pump is working to compensate for an internal occlusion. Replace watertrap/tubing/ filter, if necessary.
	Flowrate problem.	Perform leakage check. If problem still persists, perform flowrate check.
	Flow transducer incorrectly connected to flow restrictor	Check that the transducer ports A and B on the Main PC board are connected to the correct side of the flow restrictor.
	Pump problem	Block the gas inlet port and verify that the pump is driven harder to compensate for the reduction in flow. Perform pump test provided in the Preventative Maintenance kit. Caution: The instructions on cleaning apply only to the “old-type” square shaped pump; do not clean the “new type” round pump. If the pump fails the test, replace it.
	IR measurement head problem	Check out IR measurement head . Replace if necessary.
	Agent-ID problem	Check out Agent-ID. Replace if necessary.
O_2 Zero calibration shows `Failed`.	Flowrate problem.	Perform leakage check. If problem still persists, perform flowrate check.
	O_2 Span problem	Perform a Zero calibration followed by a Span calibration. Check that the Span calibration is within the accepted tolerance. If not, repeat the Zero and Span calibration one more time.
	O_2 sensor problem.	If calibration still fails, perform the O_2 check for a defective sensor as described above. If the O_2 check fails, replace the O_2 sensor.

Symptom	Possible Cause	Corrective Action
Span calibration shows `Failed` (for O_2, N_2O, CO_2, agent).	Zero calibration failed for the indicated channel.	Follow corrective actions for failed Zero calibration described above.
	Agent selection or calibration values (CalValue) incorrect	Check for proper selection of Agent and calibration values .
	Flowrate problem.	Check the flowrate.
	Leakage problem.	Perform leakage check. Check integrity of tubing and replace if necessary.
	Wrong gas applied.	Check the label on the gas canister.
	Calibration reservoir bag empty or calibration gas canister empty.	Check that there is enough gas available.
	Measurement assembly problem.	Check the Gas Analyzer Diagnosticwindow for a Measurement assembly problem. If a problem is flagged, follow corrective actions as described in the troubleshooting tables. After that, or if no problem was flagged, return to the Gas Analyzer Calibration window. If the failed status is still shown against Span Calibration, repeat the Span calibration. After that, perform a Zero calibration.
O_2 Span calibration shows `Failed`.	O_2 sensor problem.	Check O_2 sensor problem as described above.

Diagnostic Checks

WARNING If you carry out checks with replacement parts, be aware of the high-voltage locations. Never remove cables or sub-assemblies while the Module is powered on.

To access the Gas Analyzer Diagnostic window select **`Gas Analyzer Diagnostic`** in the **`Setup Gas Analyzer`** menu.

Gas Analyzer Diagnostic				
3748A07564 C.21.01				
Compatible:	Yes	Pump	5 hours	Last Zero Cal Done At
Revision Info		Diagnostic Info		28 Mar 02 15:35:56
Gas Analy. HW:	4A	Meas.Assy.:	Ok	
Gas Analy. SW:	0S	MeasOpticPath:	Ok	
Meas.Assy. HW:	68	Agt-ID:	Ok	
Agt-ID HW:	2C	O_2 Assembly:	Ok	
Agt-ID SW:	0G	Power Supply:	Problem	
Agt-ID Option:	3	Pneumatic Sys:	Problem	
O_2 Assembly:	2	Oper. Temp.:	Ok	

Figure 21 Gas Analyzer Diagnostic Window

Problem Solving Hierarchy

To help identify a problem, a **OK/Problem** message is displayed for major subassemblies. If a problem is displayed use the following pages to isolate the problem according to the following hierarchy (this hierarchy overrides the sequence shown on the display):

1 Pneumatic System

2 IR Measurement Assembly (**Meas. Assy**)

3 Optical Path (**Meas. Optic. Path**)

4 O_2 Assembly (**O_2 Assy**)

5 Agent ID Assembly (**Agt-Id Assy**)

6 Power Supply

7 Operating Temperature

The **Gas Analyzer Diagnostic** window also displays the number of pump operation hours.

NOTE To remove the top cover, refer to the section *The Top Cover*.

Refer to the following tables for possible causes of **Problem** indications, and their recommended corrective actions.

Pneumatic System Diagnostic Checks

Symptom	Possible Cause	Corrective Action
Pneumatic Sys. shows `Problem`	Weak pump	If this Problem is flagged temporarily during a zero calibration or purge mode this could indicate a weak pump. Replace the pump if problem persists
	Occluded pneumatics	Check for an occlusion, such as bent or collapsed tubing, or dirty room air filter. Listen for a louder or higher frequency pump noise. This can indicate that the pump is working to compensate for an internal occlusion. Replace watertrap/tubing/filter, if necessary.
	Defective cables	Check the cables for signs of damage or wear. Check the connectors for damaged or loose connections. If any defects are apparent, replace the cable.
	Solenoid or air reference filter problem	Check the solenoid while running a Zero calibration, by feeling whether air is being pulled in at the room air filter. If not, first replace the room air filter. If the problem still persists, replace the solenoid.
	Flowrate problem	Perform leakage check. If problem still persists, perform flowrate check.
	Flow transducer incorrectly connected to flow restrictor	Check that the transducer ports A and B on the Main PC board are connected to the correct side of the flow restrictor
	Pump problem	Block the gas inlet port and verify that the pump is driven harder to compensate for the reduction in flow. Perform pump test provided in the Preventative Maintenance kit. Caution: The instructions on cleaning apply only to the “old-type” square shaped pump; do not clean the “new type” round pump. If the pump fails the test, replace it.
	Defective power supply	Carry out the checks for the power supply.
	Defective main PC board.	If the checks above do not solve the problem, replace the main PC board.

O_2 Assembly Diagnostic Checks

Symptom	Possible Cause	Corrective Action
O_2 Assy shows `Problem`	O_2 jumpers incorrectly set	Check if the O_2 jumpers are correctly set.
	O_2 sensor failed Zero/ Span calibration	See calibration checks.

Symptom	Possible Cause	Corrective Action
	Defective O_2 sensor	If two solenoids are installed, disconnect cable of solenoid #2 (near O_2 sensor). Go into Gas Analyzer Calibration window Start a zero calibration to get the actual barometric pressure reading. Note the measured barometric pressure in mmHg displayed in the Calibration window Using a voltmeter, check the O_2 sensor voltage as follows: Connect voltmeter ground to TP1. Measure TP8 voltage. 1% O_2 is approximately equal to 10mV. As the O_2 measurement is influenced by the barometric pressure, the correct voltage must be calculated as follows: O_2 concentration of gas in mV multiplied by the measured barometric pressure in mmHg and divided by 760 mmHg. For example, correct calculated voltage for room air (20.9% O_2) and barometric pressure of 720 mmHg is: 209 mV x 720 mmHg / 760 mmHg = 198mV. If the voltage is not within ±10% of calculated value, proceed to adjust O_2 Zero and Span potentiometers in the following order: Table continued on next page.

Symptom	Possible Cause	Corrective Action
		Zero Adjust: Calculate the correct voltage as described above using the actual room air O_2 concentration and measured barometric pressure. Adjust RV2 potentiometer on the PC Board until the voltmeter reads the calculated voltage ±1mV. You can also use a gas which does not contain O_2 and adjust RV2 potentiometer on the PC Board until the voltmeter reading is 0 mV ±1mV. The gas must be applied at the **room air filter**. Span Adjust: Apply Philips Calibration Gas M1660A (containing 52% O_2) to the room air filter (connect the calibration tubing to the open end of the room air filter). Calculate the correct voltage as described above using the specific O_2 concentration and measured barometric pressure. Adjust RV1 until the voltmeter reads the calculated voltage ±10 mV. Disconnect the calibration tubing from the room air filter. Reconnect cable of solenoid #2 if it was disconnected. If these adjustments are not successful, check the pneumatic system for leakages If the problem still persists, replace the O_2 sensor. If any adjustment was necessary, perform a Zero calibration followed by an O_2 Span calibration.
	Defective cables.	Check the cables connecting the O_2 assembly and the main PC board for signs of damage or wear. Check the connectors for damaged or loose connections. If any defects are apparent, replace the cable.
	Defective power supply	Carry out the checks for the power supply .
	Defective main PC board.	If the checks above do not solve the problem, replace the main PC board.

Optical Path Disgnostic Checks

Symptom	Possible Cause	Corrective Action
MeasOpticPath shows `Problem`	Defective or contaminated sample cell	Remove the sample cell and visually check it to see if it is contaminated. The inside of the cell should be smooth and shiny. If not, replace the sample cell. Wait after the first Zero Calibration to see whether the problem disappears. If problems are cleared after warm-up, but were present during warm-up, let the AGM run for at least 90 minutes after Power On to allow the unit to reach the 90 minutes zero. This is a special zero calibration where "new" zero constants for the next warm-up phase are stored. This prevents that problems are flagged during the next warm-up phase
	Defective IR measurement assembly head	Carry out the checks for the IR measurement assembly head . With the replacement head connected, check that Optical Path problem is no longer flagged. If the problem is gone, use a new head. If not, continue checks as described below.
	Defective power supply	Carry out the checks for the power supply .
	Defective main PC board	If the checks above do not solve the problem, replace the main PC board.

IR Measurement Assembly Diagnostic Checks

Symptom	Possible Cause	Corrective Action
Meas. Assy shows `Problem`	Defective IR measurement assembly head	Do the following IR measurement assembly head checks: Check whether Service Note M1026A-035/038 applies Remove the sample cell (see *Repairing the Anesthetic Gas Module*) and visually check it to see if it is contaminated. The inside of the cell should be smooth and shiny. Perform flow and Span gas calibration (in order to store new reference values) Using a voltmeter, check the IR source voltage as follows: Connect the voltmeter ground to TP1. Measure TP6 voltage. It should be 7.87V ±20mV. If this voltage is within limits, proceed to the next check. If not, adjust the potentiometer R178 to the required value. If the adjustment is not possible, replace the measurement assembly head. Power off. Connect a replacement head with the ribbon cable and reconnect the tubing. Turn power back on and see if the Meas. Assy still shows **`Problem`**. If the message is gone, replace the head. If the problem persists, continue checking.
	Defective power supply	Carry out the checks for the power supply .
	Defective cables	Check the cables connecting the measurement head and the main PC board for signs of damage or wear. Check the connectors for damaged or loose connections. If any defects are apparent, replace the cable.
	Defective main PC board	If the checks above do not solve the problem, replace the main PC board.

Agent ID Assmebly Diagnostic Checks

Symptom	Possible Cause	Corrective Action
Agt-ID. Assy shows `Problem`	Wrong Agent-ID software revision	Check for correct Agent-ID revision in AG Revision window, item: `Agt-ID SW` If necessary, replace Agent-ID EPROM.
	Defective agent ID head.	Do the following agent ID head checks: Using a voltmeter, check the IR source voltage at the main PC board as follows: Connect the voltmeter ground to TP1. Measure TP11 voltage. It should be 7.92V ±20mV. If this voltage is within limits, proceed to the next check. If not, adjust the potentiometer R180 to the required value. If adjustment is not possible, replace the Agent-ID head. Power off. Connect a replacement head with the ribbon cable and reconnect tubing. Turn power back on and see if the Agt.-Id still shows **`Problem`**. If the message is gone, replace the head. If the problem persists, continue checking. Power Supply Diagnostic Checks
	Defective power supply	Carry out the checks for the power supply .
	Defective cables	Check the cables connecting the measurement head and the main PC board for signs of damage or wear. Check the connectors for damaged or loose connections. If any defects are apparent, replace the cable.
	Defective main PC board	If the checks above do not solve the problem, replace the main PC board.

Power Supply Diagnostic Checks

Symptom	Possible Cause	Corrective Action
Power Supply shows `Problem`	Weak pump	If this Problem is flagged temporarily during a zero calibration or purge mode this could indicate a weak pump. Replace the pump if problem persists
	Defective power supply	Using a voltmeter, check the power supply voltages at the main PC board. The power supply connectors should carry the following voltages: TP14: +12V ±600 mV TP15: +5V ±250 mV TP16: -12V ±600 mV TP17: +12V ±600 mV TP18: Analog Ground If any of the above voltages are out of limits, carry out the checks again while systematically disconnecting the subassemblies (remember to power off the Module before removing cables and subassemblies). If the voltage(s) are still out of limits, replace the power supply.
	Defective cables	Check the cables connecting the measurement head and the main PC board for signs of damage or wear. Check the connectors for damaged or loose connections. If any defects are apparent, replace the cable.
	Defective main PC board	If the checks above do not solve the problem, replace the main PC board.

Operating Temperature Diagnostic Checks

Symptom	Possible Cause	Corrective Action
Oper. Temp. shows `Problem`	Defective fan	Check that the fan runs smoothly and check its cable. If necessary, replace fan or cable.
	Insufficient air circulation due to fan working inefficiently	Check the fan aperture for blockages or dust on the fan blade or guard. If necessary, unblock or clean the fan aperture.
	Operating environment for the module falls outside of specified limits	Do not operate the module in such an environment.
	Defective IR measurement assembly head	Follow its corrective action.
	Defective agent ID head	Follow its corrective action
	Defective power supply	Follow its corrective action
	Defective main PC board.	If the checks above do not solve the problem, replace the main PC board.

Test Points, Connectors and Jumpers

Test Points

The following table lists the test points; also refer to Figure 22.

Test Point	Description	Tolerance Value (±)
TP1	Analog Gnd 1 (AGND1)	
TP2	Analog Dark Level Clamp (10DLCL)	
TP3	M1026A Preamp Signal	400mVpp ±30mv[1]
TP4	M1026A A/D Converter Input	
TP5	AC Pump Motor Reference (not used)	
TP6	IR source voltage for IR measurement assembly head (R178)	7.87 V ±20mv
TP7	Thermal Electric Cooler Drive Voltage to M1026A Head (TE+)	250mV ±100mV (after at least 15 min. warm-up)
TP8	Oxygen Transducer Signal Output (O_2SIG). Signal varies with O_2 concentration.	Examples: 20.8% O_2 is approx. 208mV, 50.0% O_2 is approx. 500mV
TP9	Analog Ground 2 (AGND2)	
TP10	M1026A A/D Converter Input	

Test Point	Description	Tolerance Value (±)
TP11	IR source voltage for agent ID head (R180)	7.92 V ±20mV
TP13	Isolated Ground for isolated RS-232 communications with the Host Computer via J14	
TP14	+12VHP	+12V ±600mV
TP15	+5V	+5V ±250mV
TP16	-12V	-12V ±600mV
TP17	+12V	+12V ±600mV
TP18	Analog Ground 3 (AGND3)	

1. Measurement requires an oscilloscope.

Connectors

The following table lists the connectors on the main PCB.

Connector	Description
J1	IR Measurement Assembly Head
J2	Agent ID Head
J3	Factory use only
J4	Factory use only
J5	DC Power: pins 1&2: +12VHP, pins 3&4: +5V GND (DGND), pin 6: AGND, pin 7: AGND, pin 8: -12V, pin 9: +12V
J6	PC Board connector (also for NVRAM data transfer)
JP7	Top cover jumper
J8	Pump driver for DC pump and AC pump (DC PUMP/AC PUMP)[1]
J10	Oxygen Transducer Connection
J13	Factory use only
J14	Connection to Host Computer for communications, RS-232
J15	Fan power (FAN1)
J16	Not used
J17	Power LED
J19	Factory use only
J20	Factory use only
J21	O_2 Solenoid (SOL2)
J22	Optional Front Panel I/O

1. Use DC pump only.

Jumpers

The following table shows the correct jumper settings for the O_2 sensor (if installed).

Jumper	Paramagnetic O_2 Sensor	No O_2 Sensor
10IRQ1	OPEN	OPEN
10IRQ2	OPEN	OPEN
10IRQ3	CLOSED	OPEN

The top cover Jumper, JP7, must always be closed, whether or not the top cover is connected.

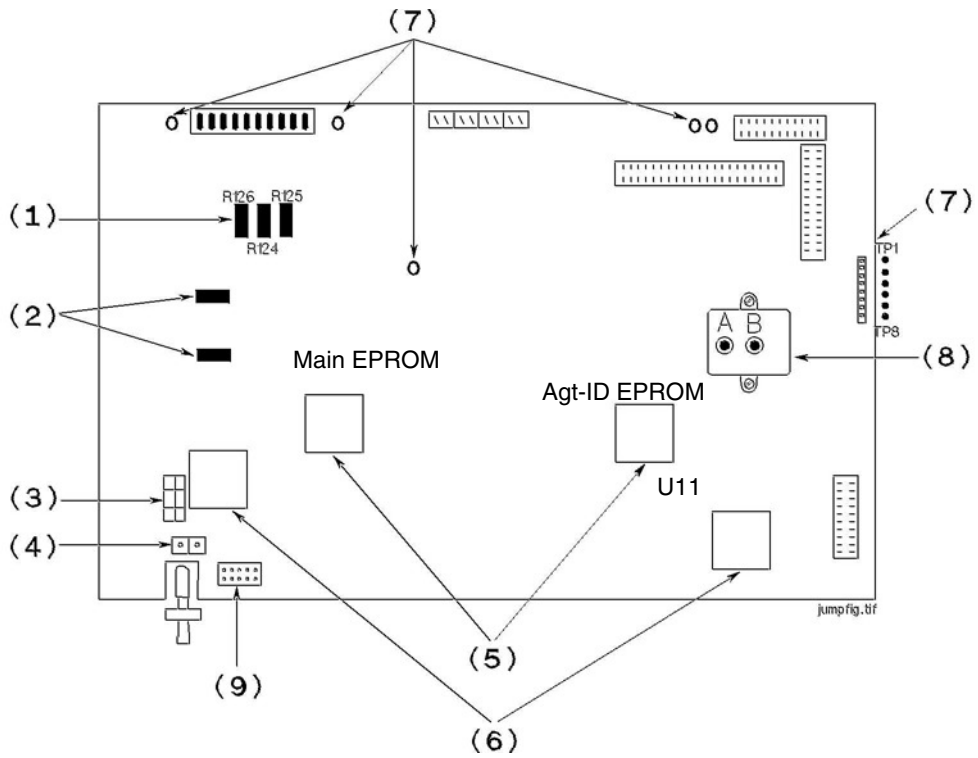

Figure 22 Potentiometers, Jumpers, and Test Points

Legend:

1	Flowrate potentiometers (R125, Purge flow and R126, Normal flow)
2	IR Source potentiometers (R178, R180)
3	O_2 jumper (10IRQ)
4	Top cover jumper (JP7)
5	EPROMs
6	Microprocessors
7	Test pins

8	Flow transducer
9	Top-cover PC board connector / NVRAM transfer

Repairing the Anesthetic Gas Module

Introduction

This section contains detailed removal and replacement procedures for all field-replaceable units in the Philips M1026A Anesthetic Gas Module.

CAUTION Use caution when handling tubing and other components of the patient circuit. Wear gloves, mask and gown while handling components that come into contact with the patient's exhalant gas or fluids.

Before you can remove any of these field replaceable units, you first need to remove the top cover of the Anesthetic Gas Module. The procedure for this is described in "The Top Cover" on page 64.

WARNING Switch off the instrument and disconnect it from the mains power supply. Take standard electrostatic precautions. For example, a wrist strap connected to electrical ground.

Figure 23 shows the field-replaceable units for the Anesthetic Gas Module. These are:

- Top Cover
- Infrared (IR) Measurement Assembly (2)
- Sample Cell
- Solenoid Valve #1 (7)
- Power Supply Unit (1)
- Main PC Board (13)
- O_2 Paramagnetic Assembly (11)
- Agent Identification Head (9)
- Pump (3)
- Fan (5)
- Solenoid Valve #2 (10)
- Top Cover PC Board (15)
- PM Kit comprising:
  - Room Air Filter (6)
  - Nafion Tubing and internal bacterial filters(12)
  - Watertrap manifold seals
  - Pump Filter (4)
- Watertrap Manifold and Protector

- Power fuses

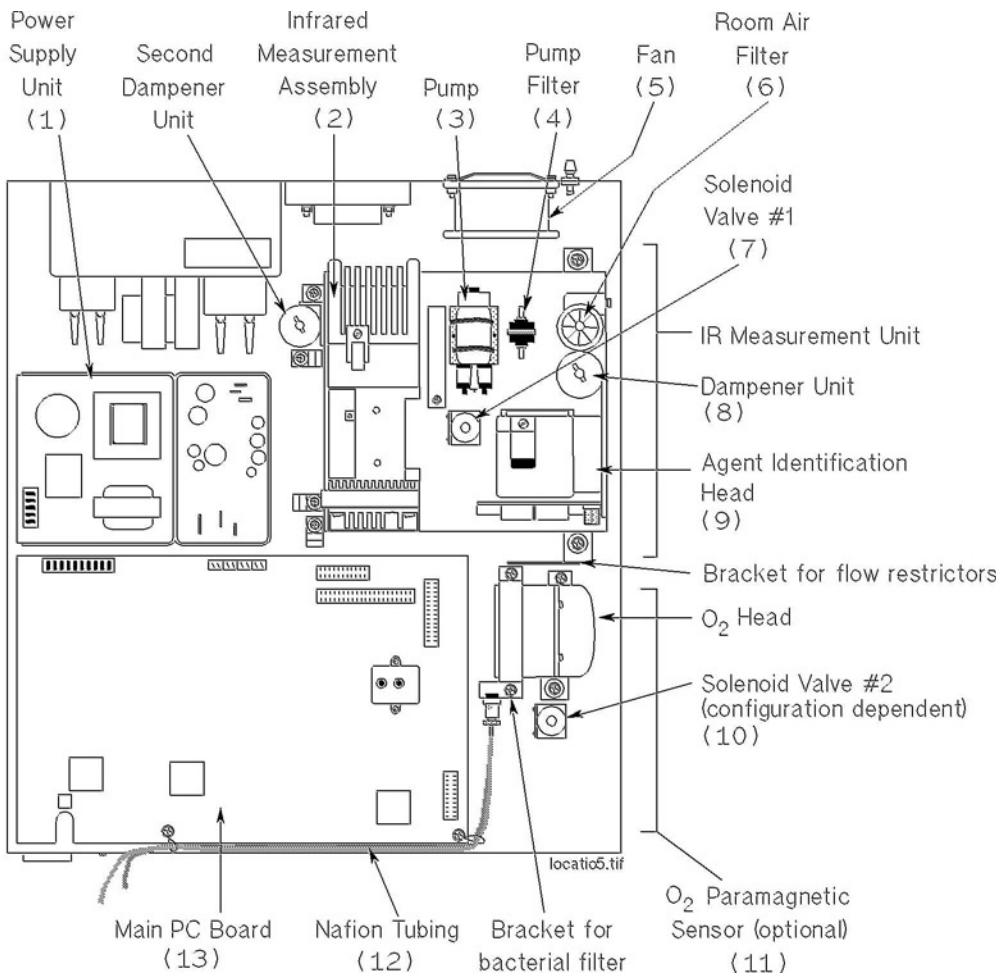

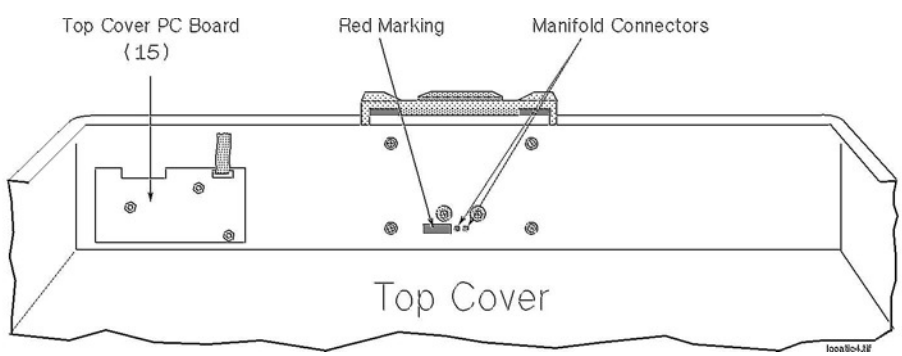

Figure 23 Main Subassemblies (showing O_2 paramagnetic sensor with integrated pc board) of the Anesthetic Gas Module

The Top Cover

Removal

To remove the top cover (refer to Figure 24 and Figure 25):

1 Make sure that the module is switched off and isolated from the mains power supply.

2 Remove the watertrap from the front of the cover (to avoid fluids in the watertrap reaching the water fuses when the cover is tipped).

3 Using a cross-tipped screwdriver, remove the 7 screws (1) securing the top cover to the body. These screws are located at the rear of the module and on the sides.

4 Slide the top cover (2) forward approximately 4cm.

NOTE At this stage, the top cover is still connected to the main PC board by a flat cable and the internal Nafion tubing.

5 Carefully lift the top cover until the flat cable connector (3) leading to the main PC board is accessible.

6 Remove the flat cable connector (3) from the top cover.

7 If necessary, remove the internal Nafion tubing.

8 Remove the top cover from the module.

Replacement

To replace the top cover (refer to Figure 26 and Figure 27):

1 Ensure that the module is switched off and isolated from the mains power supply.

2 Reconnect the flat cable connector (3).

3 If necessary, reconnect the internal Nafion tubing, following the given markings.

4 Carefully lower the top cover (4) onto the chassis (5).

5 Slide the top cover towards the rear of the module until the locating holes on the top cover are aligned with the threaded bores in the module.

6 Using a cross-tipped screwdriver, replace the 7 screws (1) securing the top cover to the module. The locating holes are under the top cover at the rear and sides of the module.

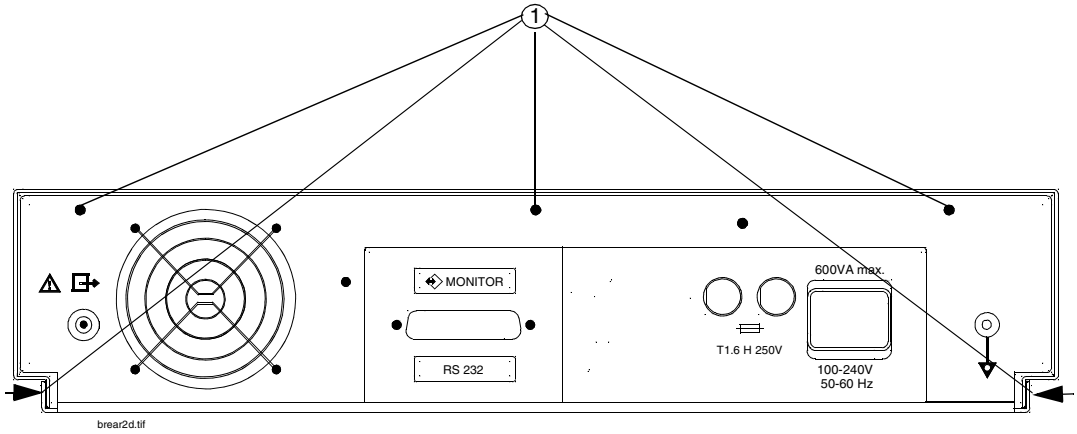

Figure 24 Top Cover Securing Screws for the Anesthetic Gas Module

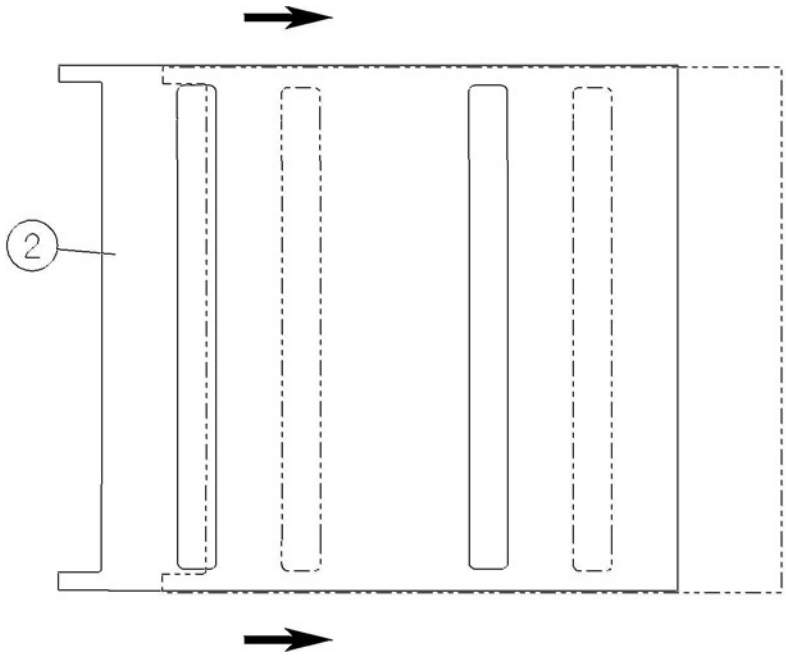

Figure 25 Sliding Off the Top Cover of the Anesthetic Gas Module

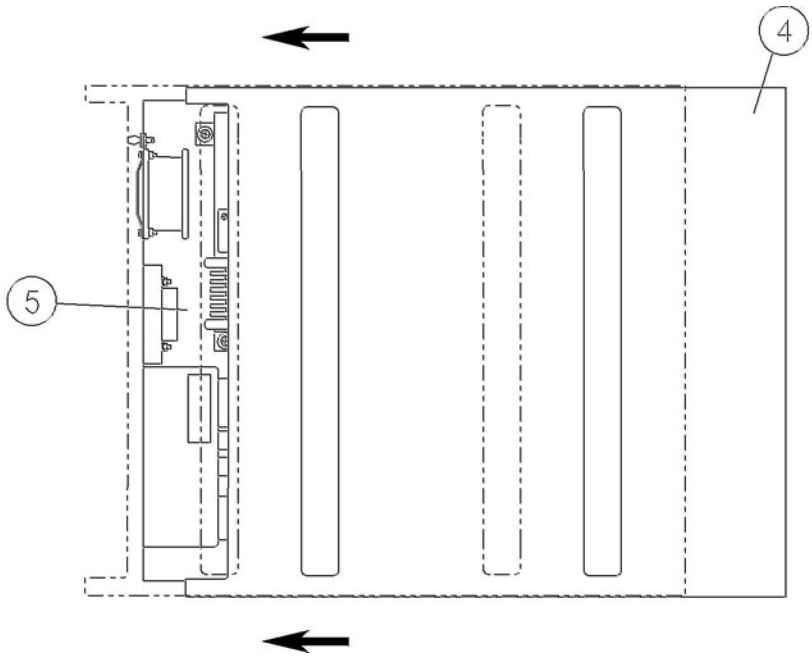

Figure 26 Sliding On the Top Cover of the Anesthetic Gas Module

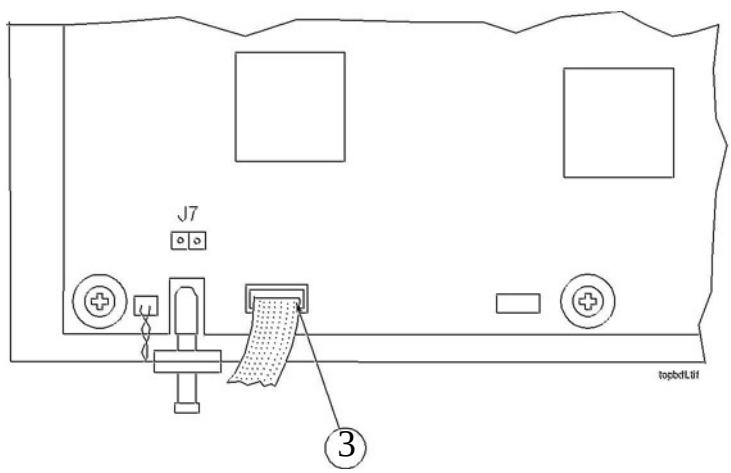

Figure 27 Main PC Board Connector to the Top Cover of the Anesthetic Gas Module

Lifting the IR Measurement Mounting Bracket

Several of the field replaceable subassemblies are mounted on the IR measurement mounting bracket, which is a subassembly of the Anesthetic Gas Module, as shown in Figure 28.

The IR assembly mounting bracket must first be lifted and stood on end before any of the following units can be removed or replaced:

- IR measurement assembly and sample cell.
- Solenoid valve #1.

Removal

To lift the IR Measurement mounting bracket (refer to Figure 28 and Figure 29):

1. Ensure that the module is switched off and isolated from the mains power supply. Remove the top cover of the module.
2. Remove the cables from the cable clip.
3. Remove the connection from the gas exhaust (1).
4. Using a cross-tipped screwdriver, remove the four screws and lock washers (2) securing the IR Measurement mounting bracket to the module.
5. Lift the IR Measurement mounting bracket and stand it carefully on its end, so that the ribbon cables are at the bottom. The securing screws on the underside are now accessible, as shown in Figure 29.

Replacement

To replace the IR Measurement mounting bracket (refer to Figure 28 and Figure 29):

1. Ensure that the module is switched off and isolated from the mains power supply.
2. Lay the IR Measurement mounting bracket carefully onto its 4 spacers so that the locating holes are aligned with the threaded bores.
3. Make sure that the dampener (3), cable clamp (4) and bracket with flow restrictor (5) are in place. Using a cross-tipped screwdriver, fit the four screws and lock washers (2) securing the IR Measurement mounting bracket to the module.
4. Reconnect the pneumatic tubing to the gas exhaust (1).
5. Replace the power connection to the pump (where applicable) and secure the cables with the clip.
6. Replace the top cover of the module.

NOTE After replacing the IR Measurement mounting bracket, check that all flat-cable connectors are firmly seated and show no signs of damage.

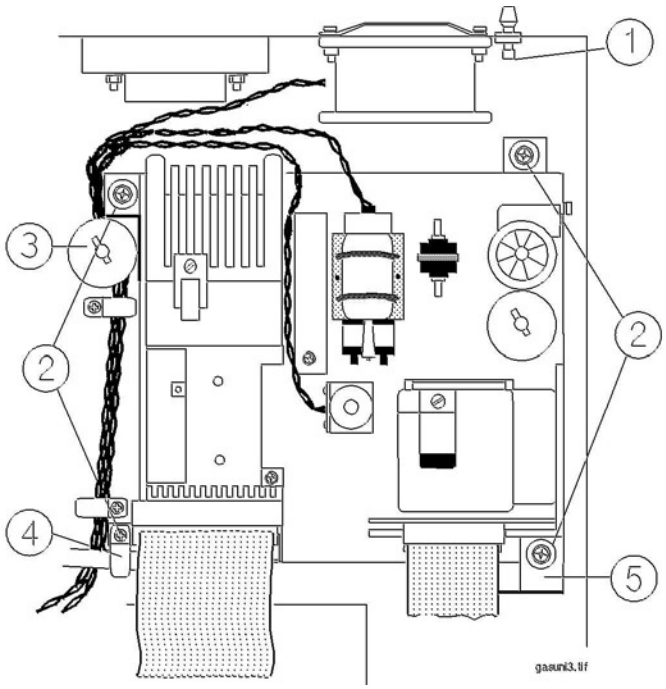

Figure 28 Lifting the IR Measurement Mounting Bracket

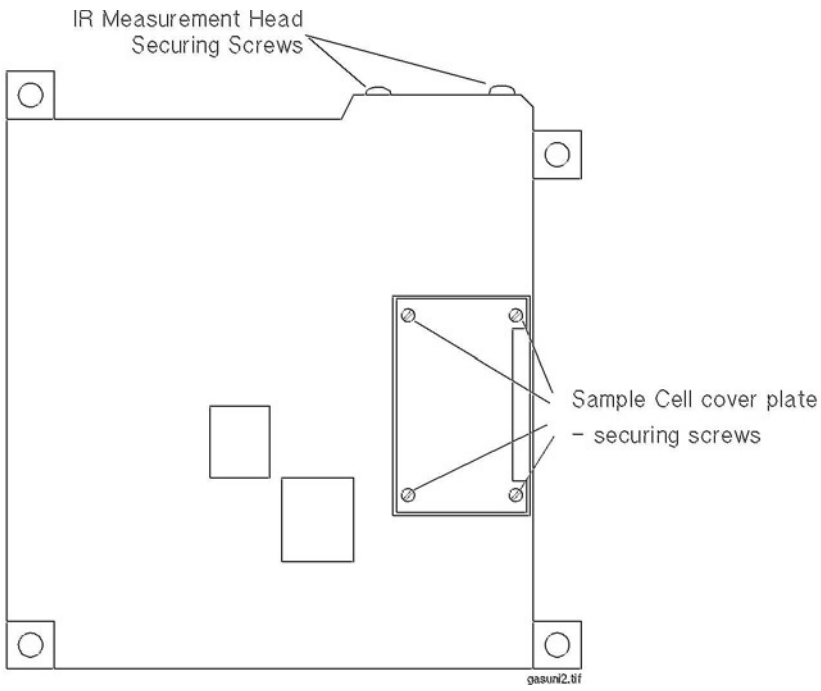

Figure 29 Underside of the IR Measurement Mounting Bracket

Infrared Measurement Assembly Head

Transferring NVRAM Data to a Replacement Head

When you replace an IR measurement head, you need to transfer its data to the replacement head. The data is stored in non-volatile RAM (NVRAM) on the head and includes:

- System serial number
- Pump hours
- Flow rate limits
- User span constant for all channels
- User O_2 calibration values
- O_2 delay cycles
- IR source voltage

The NVRAM transfer board (NTB) reads data from the old head and transfers it to the replacement head. The NTB is included with each replacement head.

Procedure for Transferring Data

1 Disconnect the Anesthetic Gas Module from the monitor.

2 Turn off power to the Anesthetic Gas Module.

3 Remove the Anesthetic Gas Module top cover and disconnect it from the Main PC board.

4 Connect the 40-pin cable of the NTB to the 40-pin connector of the new replacement IR Measurement head.

5 Connect the 10-pin cable of the NTB to the top cover connector (J6) on the Main PC board.

6 Power up the Anesthetic Gas Module and observe the LED on the NTB.

7 For about the first 5 seconds the LED on the NTB will be *amber*. Whenever the LED is amber, the NTB is processing information and you must stand by until the LED changes color again. During these first 5 seconds, the NVRAMs of both the old and the new measurement heads are being read and checked. If the LED changes to a solid *green* color, the NVRAM transfer process can begin. Please skip to step 8 if the LED is *green*.

When either NVRAM cannot be read, it may take up to one minute before the LED changes color and you will observe one of two error conditions:

– If the LED changes to a solid *red* color, a problem reading the old measurement head has occurred. Turn off the power and check all connections. Make sure the ribbon cables are not broken and correctly seated. Repeat the procedure staring with step 6.

If the LED is still on *red*, proceed with the installation of the new analyzer head regardless. The NVRAM transfer will not be possible, but the replacement head has default information for pump hours and no serial number. However, before installing the new measurement head, you need to verify that the head is functional:

a. Replace the old measurement head with the new one.

b. Repeat the NVRAM transfer procedure from step 6.

If the LED blinks alternately *red* and *green*, the head is functional and you can continue with the installation of the new head. If the LED is solid *red*, either the new head and/or the cable from the head to the main PC board is defective. In this case you must replace the head or the cable or both.

NOTE When installing a new measurement head and using the default NVRAM data, a flow rate calibration *must* be performed because no flow rates will be transferred. If no flow rate calibration is performed, a problem with the pneumatic system will be flagged during Anesthetic Gas Module operation.

– If the LED blinks alternately *red* and *green*, a problem occurred reading the new analyzer head. Turn off the power and check all connections. Make sure the ribbon cables are not broken and correctly seated. Repeat the procedure staring with step 6.

If the LED is still blinking *red* and *green* you need to check whether the failed NVRAM transfer is due to a defective NTB and/or cable connection:

a. Replace the old measurement head with the new one.

b. Repeat the NVRAM transfer procedure from step 6.

If the LED is solid *red*, the new measurement head is defective. In this case you must use a new replacement measurement head and return to step 4. If the LED blinks alternately *green* and *red*, the NTB and/or the attached cables are defective. In this case you need to use a new NTB, or you can install the new measurement head with the default NVRAM data.

8 Once the LED is on *green*, you can begin the NVRAM transfer process by pressing the momentary push button switch on the NTB. The LED will change to *amber* for about 5 seconds, followed by solid *green* indicating a good transfer of NVRAM data.

If you observe a blinking *red* LED, no transfer or a bad transfer of NVRAM data occurred. Proceed with the installation of the new measurement head regardless. The NVRAM transfer will not be possible, but the replacement head has default information for pump hours and no serial number. However, a flow rate calibration ***must*** be performed because no flow rates will be transferred. If no flow rate calibration is performed, a problem with the pneumatic system will be flagged during Anesthetic Gas Module operation.

9 If step 8 was successful, the Anesthetic Gas Module can now be powered off. The NTB can be disconnected and the old measurement head removed and replaced with the new head (see removal and replacement procedure below).

10 Reconnect the Anesthetic Gas Module to the monitor.

NOTE When returning the defective measurement head for repair, make sure to return the NVRAM transfer board with the head.

Instructions for the transfer procedure are also included with the NTB.

Removal

To remove the IR measurement assembly head (refer to Figure 30 and Figure 31):

1 Remove the flat-cable (1) connector from the main PC board.

2 Remove the pneumatic connections (2) from the sample cell, which are located on top of the IR measurement assembly head.

3 Remove the pressure transducer connection (3) located on the side of the IR measurement assembly head.

4 Stand the IR measurement mounting bracket on end (refer to “Lifting the IR Measurement Mounting Bracket” on page 66).

5 Using a cross-tipped screwdriver, remove the 3 screws (4) securing the IR measurement assembly head to the IR measurement mounting bracket.

6 Remove the IR measurement assembly head carefully from the IR measurement mounting bracket.

Replacement

To replace the IR measurement assembly head (refer to Figure 30 and Figure 31):

1 Place the IR measurement assembly head in the IR measurement mounting bracket so that the threaded bores on the head align with their corresponding locating holes on the IR measurement mounting bracket.

2 Using a cross-tipped screwdriver, replace the three screws (4) securing the IR measurement assembly head to the IR measurement mounting bracket.

3 Replace the IR measurement mounting bracket (refer to “Lifting the IR Measurement Mounting Bracket” on page 66).

4 Replace the transducer reference connection (3) located on the side of the IR measurement assembly head.

5 Replace the pneumatic connections (2) to the sample cell (located on top of the IR measurement assembly head).

NOTE Check that all tubing is tightly connected and show no signs of damage.

6 Replace the flat-cable (1) connector to the main PC board.

NOTE After replacing the IR measurement assembly head, check that all flat-cable connectors are firmly seated and show no signs of damage.

Now perform the performance checks described in the “Test and Inspection Matrix” on page 94.

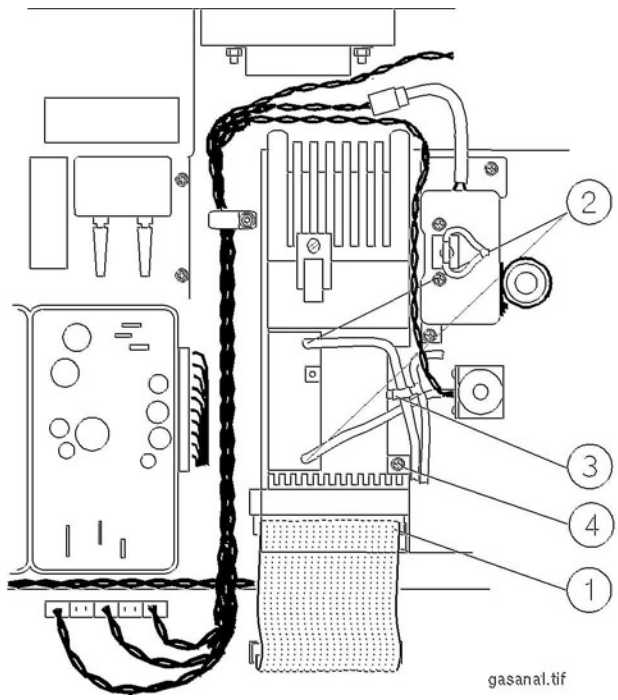

Figure 30 Removing the IR Measurement Assembly Head

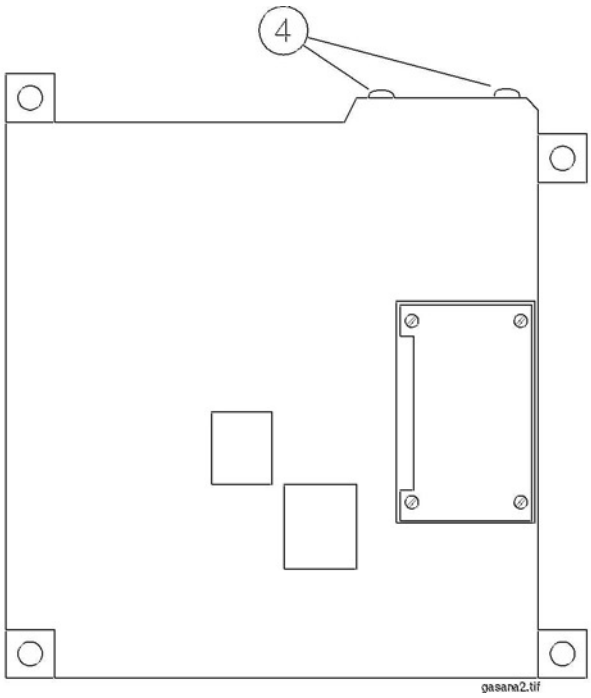

Figure 31 Locating Screws for the IR Measurement Assembly Head

Sample Cell

Removal

To remove the sample cell (refer to Figure 32, Figure 33, Figure 34 and Figure 35):

1. Stand the IR measurement mounting bracket on end, towards the main PC board (refer to "Lifting the IR Measurement Mounting Bracket" on page 66).
2. Remove the pneumatic connections (1) from the sample cell, which are located on top of the IR measurement assembly head.
3. Using a cross-tipped screwdriver, remove the four screws (2) securing the sample cell cover plate and bracket (3) from the IR measurement assembly head. Retain these parts for later replacement.
4. Lay the IR measurement assembly head flat and, using a flat-tipped screwdriver, apply pressure from above to the overlapping part (4) of the sample cell cover, and pry it off.
5. Carefully withdraw the sample cover and bracket (5) from the IR measurement head.
6. Using a cross-tipped screwdriver, remove the screw (6) securing the clamping plate (7) to the sample cell bracket (8).
7. Remove the sample cell (9).

Replacement

To replace the sample cell (refer to Figure 32, Figure 33, Figure 34 and Figure 35):

1 Position the sample cell (9) onto its bracket (8) and hold it in place with the clamping plate (7).
2 Using a cross-tipped screwdriver, replace the screw (6) securing the clamping plate to the bracket. Before tightening the screw, ensure that the pipes to the sample cell are aligned parallel with the sides of the bracket.

NOTE Make sure the temperature sensor has not slipped out of its hole. This can prevent the bracket from being pushed home.

3 Insert the sample cell bracket and cover (5) into the base of the IR measurement assembly head. Push the bracket home so that the surface of the cover plate is flush with the base of the IR measurement head. The two gas tubes should now protrude from the holes (1) on top of the IR measurement head.
4 Using a cross-tipped screwdriver, replace the four screws (2) securing the sample cell cover plate and bracket (3) to the IR measurement assembly head.
5 Replace the pneumatic connections (1) to the sample cell, which are located on top of the IR measurement head.

NOTE Check that all tubing is tightly connected and show no signs of damage.

6 Replace the IR measurement mounting bracket (refer to “Lifting the IR Measurement Mounting Bracket” on page 66).

NOTE After replacing the sample cell, check that all flat-cable connectors are firmly seated and show no signs of damage.

Now perform the performance checks described in the “Test and Inspection Matrix” on page 94.

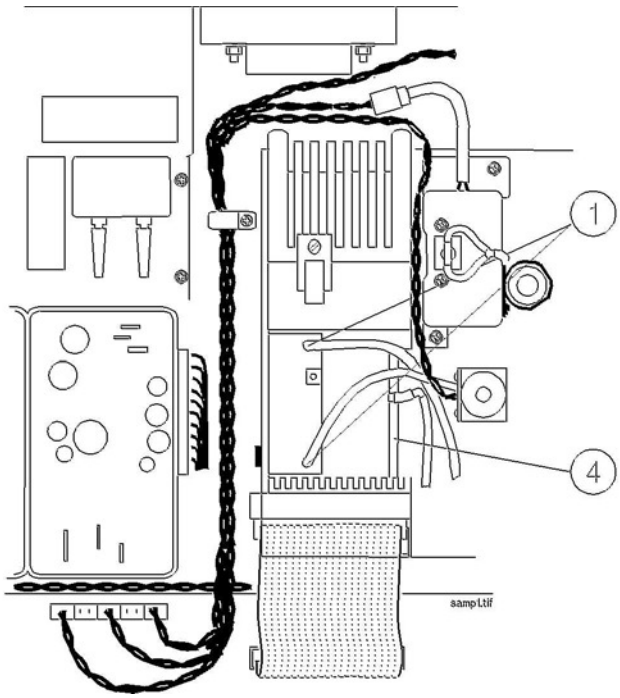

Figure 32 Removing the Sample Cell Pneumatic Connections

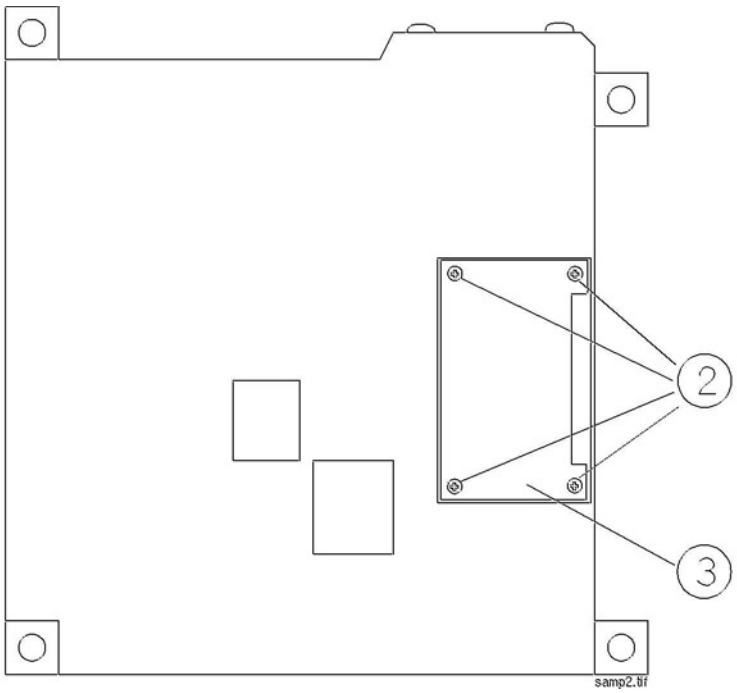

Figure 33 Removing the Sample Cell Cover

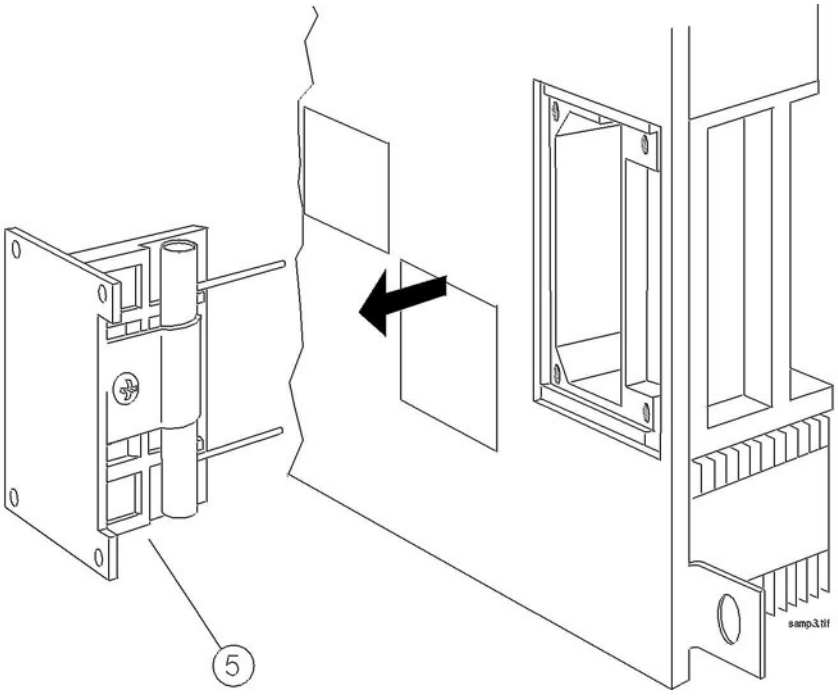

Figure 34 Extracting the Sample Cell Bracket

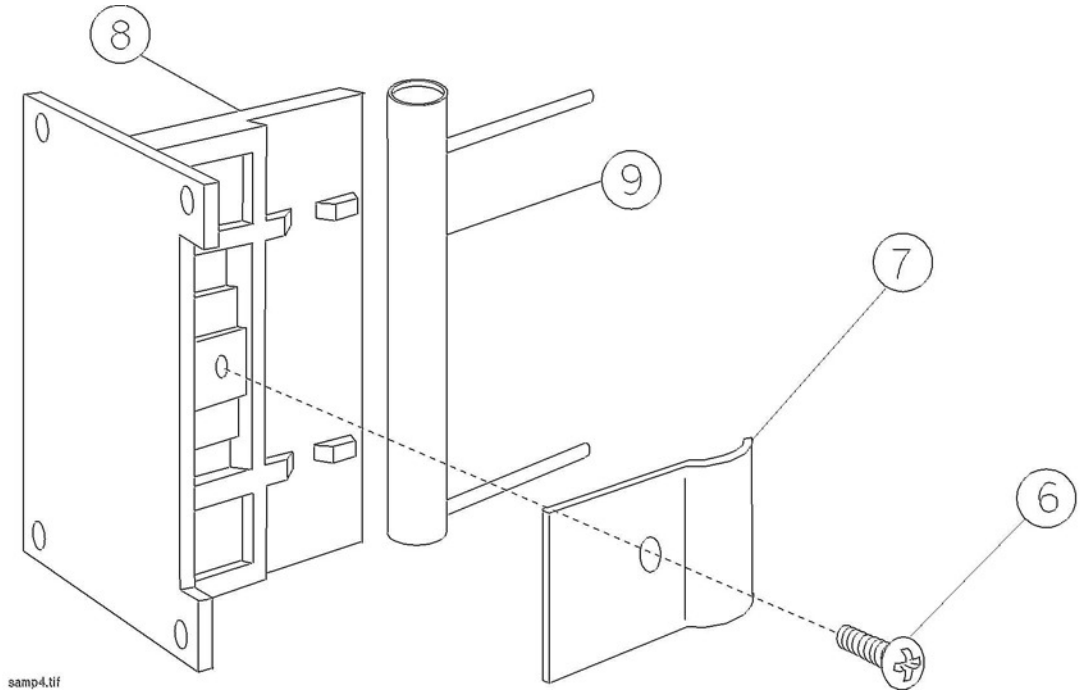

Figure 35 Replacing the Sample Cell

Solenoid Valve #1

Removal

To remove solenoid valve #1 (refer to Figure 36 and Figure 37):

1. Remove the pneumatic tubing (1) from solenoid valve #1.
2. Remove the power connector (2) from the main PC board.
3. Pry the twisted pair supplying power from the solenoid valve out of the cable clip (3).
4. Using a cross-tipped screwdriver, remove the three screws (4) securing the IR measurement assembly head.
5. Lift the IR measurement head slightly so that the screws (5) securing the solenoid valve are accessible.
6. Using a cross-tipped screwdriver, remove the two screws securing solenoid valve #1 to the IR measurement mounting bracket.
7. Carefully remove solenoid valve #1 and its cable from the IR measurement mounting bracket.

Replacement

To replace solenoid valve #1 (refer to Figure 36 and Figure 37):

1 Lift the IR measurement assembly head slightly so that the threaded bores (5) on the mounting bracket for the solenoid valve are accessible.

2 Carefully position Solenoid Valve #1 so that its locating holes align with the threaded bores on the mounting bracket.

3 Using a cross-tipped screwdriver, replace the two screws (5) securing Solenoid Valve #1 to the IR measurement mounting bracket.

4 Snap the twisted pair from the solenoid valve into the cable clip (3) securing the twisted pairs that connect the IR measurement assembly head to the main PC board.

5 Replace the connection (2) to the main PC board.

6 Replace the pneumatic tubing (1) to Solenoid Valve #1.

NOTE Check that all tubing is tightly connected and show no signs of damage.

After replacing Solenoid Valve #1, check that all flat-cable connectors are firmly seated and show no signs of damage.

7 Using a cross-tipped screwdriver, replace the three screws (4) securing the IR measurement assembly head.

8 Replace the IR measurement assembly mounting bracket (refer to “Lifting the IR Measurement Mounting Bracket” on page 66).

Now perform the performance checks described in the “Test and Inspection Matrix” on page 94.

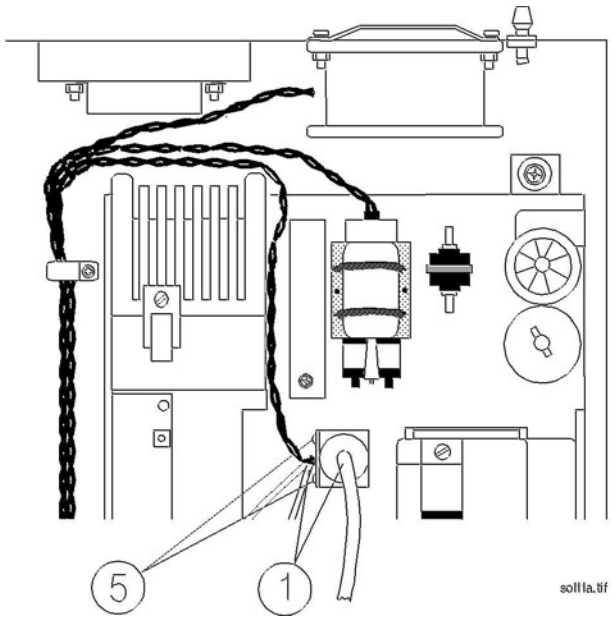

Figure 36 Removing the Solenoid Valve #1

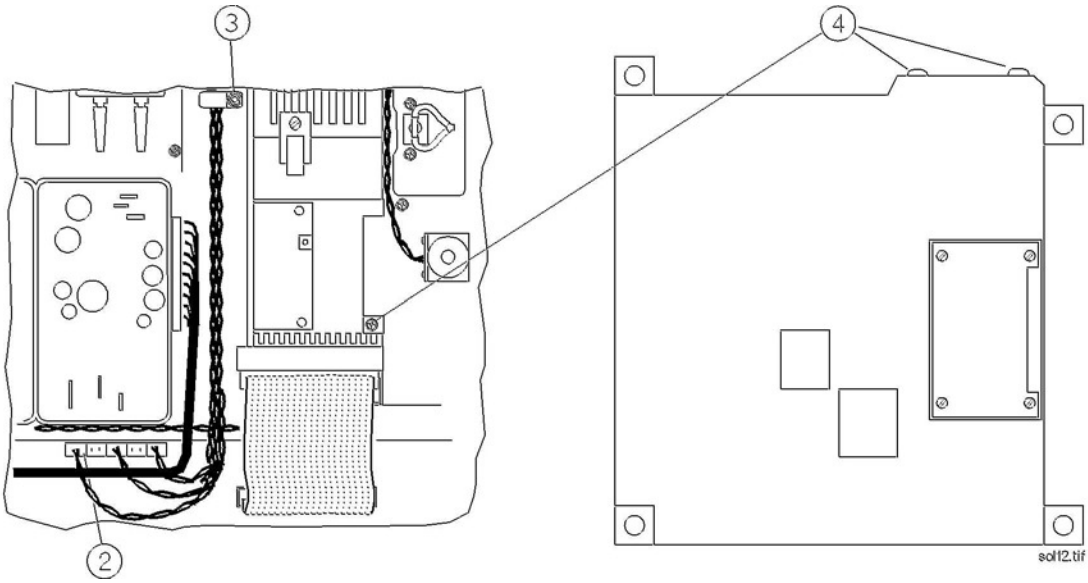

Figure 37 Replacing the Solenoid Valve #1

Power Supply Unit

Removal

To remove the power supply unit (refer to Figure 38):

1 Ensure that the module is switched off and isolated from the mains power supply. Remove the top cover of the module.

2 Remove the ac power connector (1) from the power supply unit.

3 Remove the power connector (2) from the main PC board.

4 Using a cross-tipped screwdriver, remove the four screws (3) securing the power supply unit to its mounting.

5 Remove the power supply unit.

Replacement

To replace the power supply unit (refer to Figure 38):

1 Ensure that the module is switched off and isolated from the mains power supply.

2 Carefully place the power supply unit so that its locating holes are aligned with the threaded bores in the mounting on the module.

3 Using a cross-tipped screwdriver, replace the four screws (3) securing the power supply unit to its mounting.

4 Connect the power connector (2) to the main PC board.

5 Connect the ac power connector (1) to the power supply unit.

6 Replace the top cover of the module.

Now perform the performance checks described in the “Test and Inspection Matrix” on page 94.

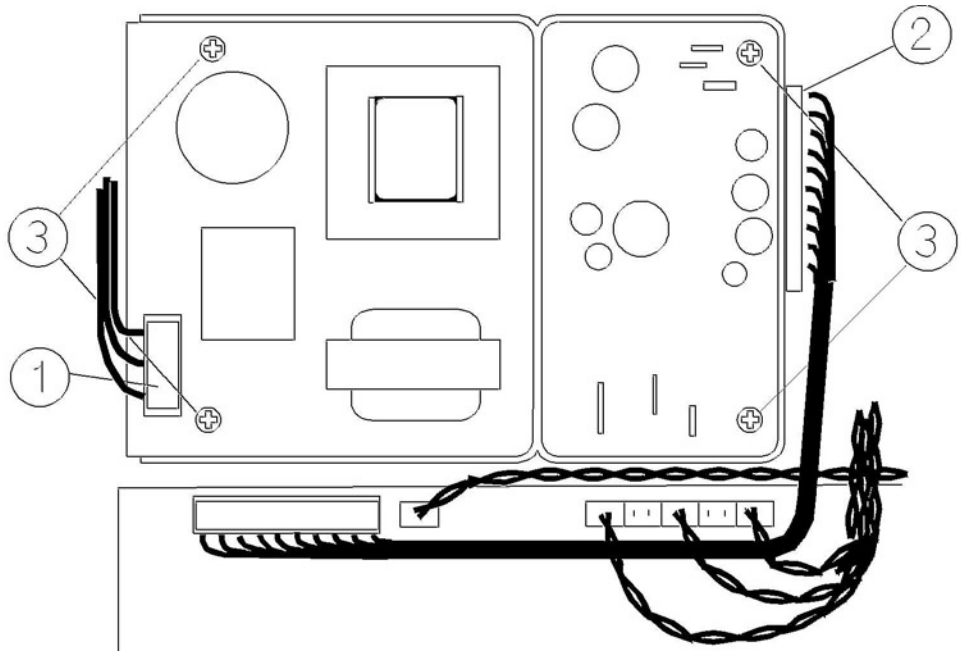

Figure 38 Removing and Replacing the Power Supply Unit

Main PC Board

Removal

To remove the main PC board (refer to Figure 39):

1 Ensure that the Module is switched off and isolated from the mains power supply. Remove the top cover of the module.

2 Remove the pneumatics tubing from the pressure transducer (1).

3 Remove the main PC board connector (2) from the power supply unit.

4 Remove the power connectors (3) that connect the main PC board to the fan, solenoid valve #1, pump and solenoid valve #2.

5 Remove the flat-cable connector (4) from the IR measurement head.

6 Remove the flat-cable connector (5) from the RS232 connector.

7 Remove the flat-cable connector (6) from the agent identification head.

8 If O_2 sensor is present, remove the flat-cable connector (7) from the small O_2 sensor PC board (or directly from the O_2 sensor, for sensors with integrated PC board).

9 Remove the connector (9) from the power LED.

10 Using a cross-tipped screwdriver, remove the cable clamps (12).

11 Using a cross-tipped screwdriver, remove the 6 screws (10) securing the main PC board to its mounting on the module.

12 Carefully remove the main PC board.

Replacement

To replace the main PC board (refer to Figure 39):

1 Ensure that the module is switched off and isolated from the mains power supply.

2 Carefully place the main PC board on its mounting in the Anesthetic Gas Module so that the 6 locating holes are aligned with the threaded bores.

3 Using a cross-tipped screwdriver, replace the 6 screws and washers (10) securing the main PC board to its mounting, and replace the cable clamps.

4 Replace the connector (9) to the power LED.

5 If the O_2 sensor is present, replace the flat-cable connector (7) to the O_2 sensor PC board (or directly to the O_2 sensor). Verify the O_2 jumper settings.

6 Replace the flat-cable connector (6) to the agent ID head.

7 Replace the flat-cable connector (5) to the RS232 connector.

8 Replace the flat-cable connector (4) to the IR measurement head.

9 Replace the power connectors (3) that connect the main PC board to the fan, pump, solenoid #1 and solenoid #2.

10 Replace the main PC board connector (2) to the power supply unit.

11 Refit the pneumatic tubing to the pressure transducer (1). Check that all tubing is tightly connected and show no signs of damage.

12 Replace the top-cover cable (8) to the PC board.

NOTE After replacing the main PC board, check that all flat-cable connectors are firmly seated and show no signs of damage.

Verify the O_2 jumper settings as described in “Jumpers” on page 60.

Make a flowrate check.

13 Replace the top cover of the module. Ensure that the top cover jumper (JP7) is set to “closed”.

14 Do a configuration check in service mode (Agent-ID, O_2 sensor).

Now perform the performance checks described in the “Test and Inspection Matrix” on page 94.

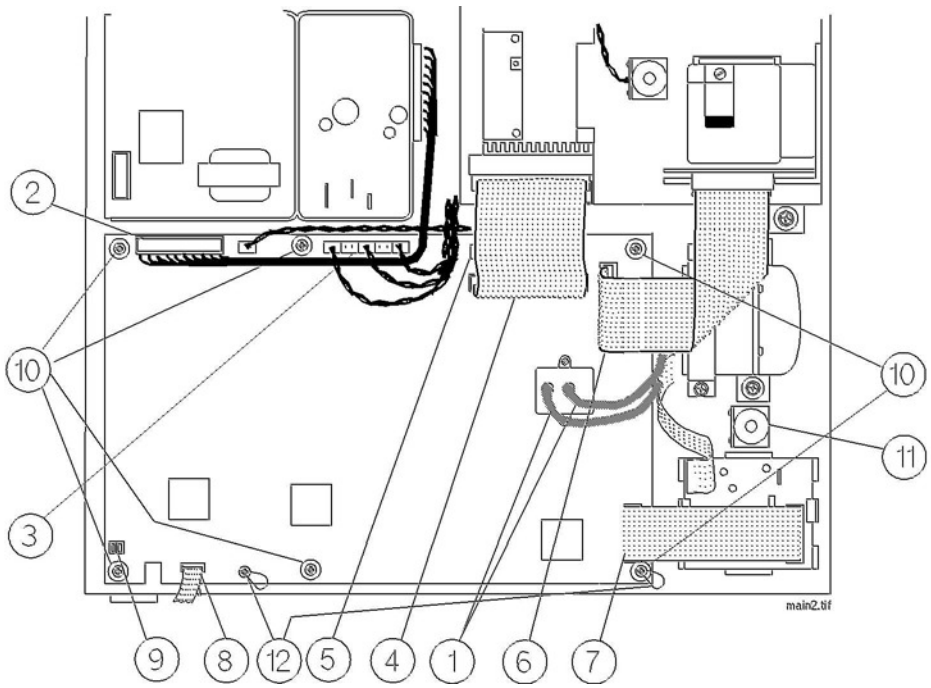

Figure 39 Removing the Main PC Board

O_2 Sensor

The O_2 sensor is always replaced together with the small PC board that controls it. The newer O_2 sensors have the board integrated inside the sensor housing.

Removal

To remove the O_2 sensor and its PC board follow the steps marked (a) and to remove the O_2 sensor with integrated PC board follow the steps marked (b) (refer to Figure 40 and Figure 41):

1 Ensure that the module is switched off and isolated from the mains power supply. Remove the top cover of the module.

2 Remove the 3 pneumatic connections (1) from the O_2 sensor.

3 Remove the flat cable connector (2) from the PC board that controls the O_2 sensor.

4 Remove the flat cable connector (2) from the connector on the top of the O_2 sensor housing.

5 Release the clips (3) securing the PC board to its mounting.

6 Using a cross-tipped screwdriver, remove the two screws and washers (4) securing the O_2 sensor to its mounting brackets.

7 Carefully remove the O_2 sensor [(b) along with its PC board.]

NOTE If you are not operating O_2, remove the appropriate jumper.

Replacement

To replace the O_2 sensor and its PC board follow the steps marked (a) and to replace the O_2 sensor with integrated PC board follow the steps marked (b) (refer to Figure 40 and Figure 41):

1. Ensure that the module is switched off and isolated from the mains power supply.
2. Carefully place the O_2 sensor on its mounting so that the locating holes are aligned with the threaded bores.
3. Press the PC board onto its mounting until it clicks into place, and is firmly secured by the clips (3).

NOTE Make sure that the PC board is inserted so that the smaller connector points toward the main PC board.

1. Place the bracket with the internal bacterial filters (5) onto the mounting bracket, aligning the locating holes.
2. Using a cross-tipped screwdriver, replace the two screws and washers (4) securing the O_2 sensor to its mounting.
3. Replace the flat cable connector (2) that connects the main PC board to the PC board that controls the O_2 sensor.
4. Replace the flat cable connection (2) to the top of the O_2 sensor housing.

NOTE Verify the O_2 jumper settings.

5. Replace the 3 pneumatic connections (1) to the O_2 sensor. Connect the tubing with the T-piece to the O_2 sensor inlets (upper and lower connections). Connect the single tubing to the outlet (middle connection). Check that all tubing is tightly connected and show no signs of damage.

NOTE After replacing the O_2 sensor and, where applicable, its controlling PC board, check that all flat-cable connectors are firmly seated and show no signs of damage.

6. Replace the top cover of the module.

Now perform the performance checks described in the “Test and Inspection Matrix” on page 94.

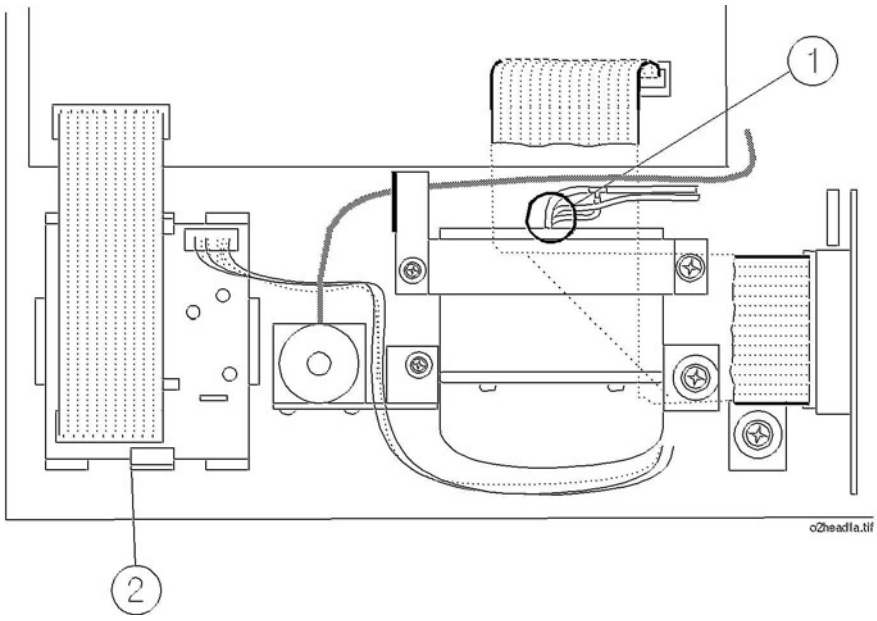

Figure 40 Removing the Connections of the O_2 Sensor

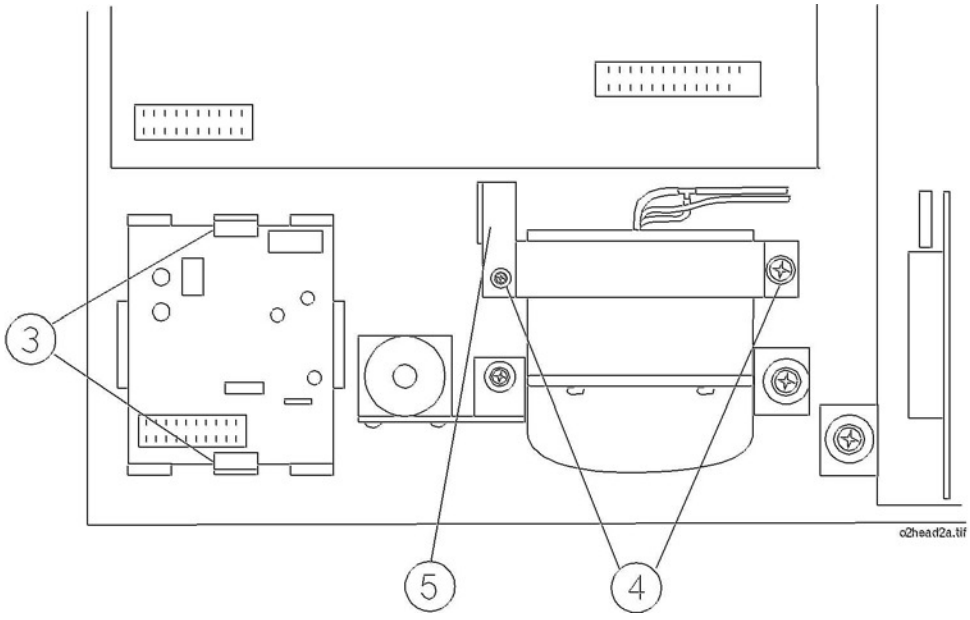

Figure 41 Removing the O_2 Sensor with its PC Board

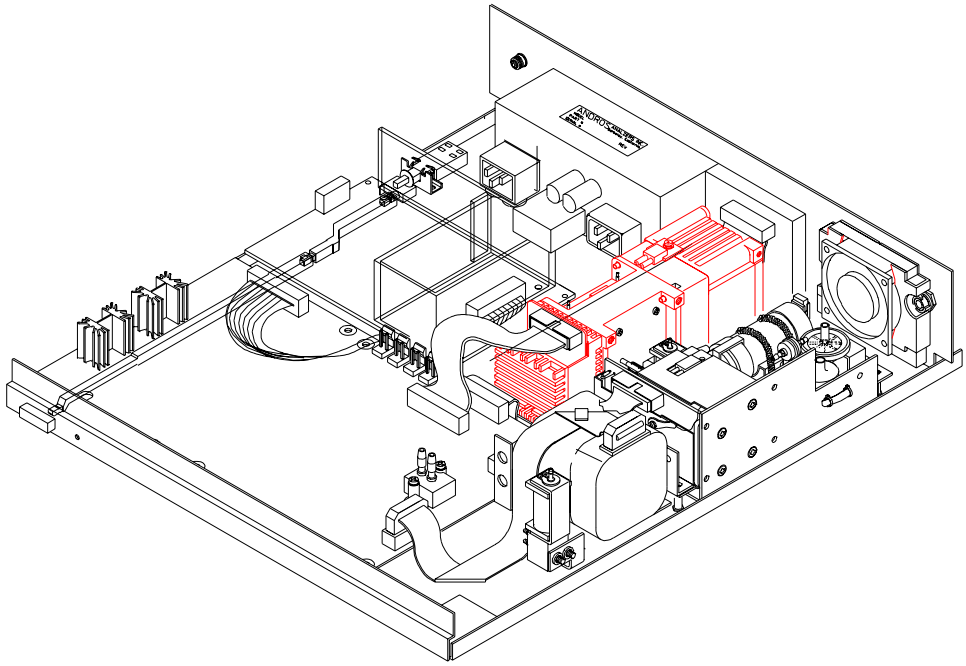

Figure 42 Layout showing O_2 sensor with Integrated PC Board

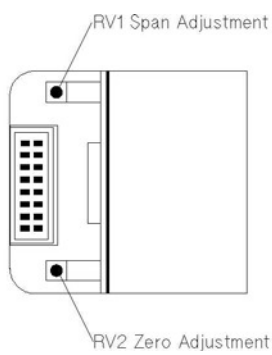

Figure 43 Location of Adjustment Potentiometers on O_2 Sensor with Integrated PC Board

Agent Identification Head

Removal

To remove the agent ID head (refer to Figure 44):

1 Ensure that the module is switched off and isolated from the mains power supply. Remove the top cover of the module.

2 Remove the flat cable connection (1) from the Agent-ID.

3 Remove the 3 pneumatic connections (2) from the side of the agent ID head.

4 Using a cross-tipped screwdriver, remove the 4 screws (3) securing the agent ID head to the IR measurement mounting bracket.

5 Carefully remove the agent ID head from the module.

Replacement

To replace the agent ID head (refer to Figure 44):

1 Place the agent ID head onto the IR measurement unit so that its threaded bores align with the locating holes provided.

2 Replace the 3 pneumatic connections (2) to the side of the agent ID head. The top and bottom connections are the inlets, and the middle connection is the outlet to the pump. Check that all tubing is tightly connected and show no signs of damage.

3 Using a cross-tipped screwdriver, replace the 4 screws (3) securing the agent ID head to the IR measurement mounting bracket.

4 Replace the flat cable connection (1) to the Agent-ID.

NOTE After replacing the agent ID head, check that all flat-cable connectors are firmly seated and show no signs of damage.

5 Replace the top cover of the module.

Now perform the performance checks described in the “Test and Inspection Matrix” on page 94.

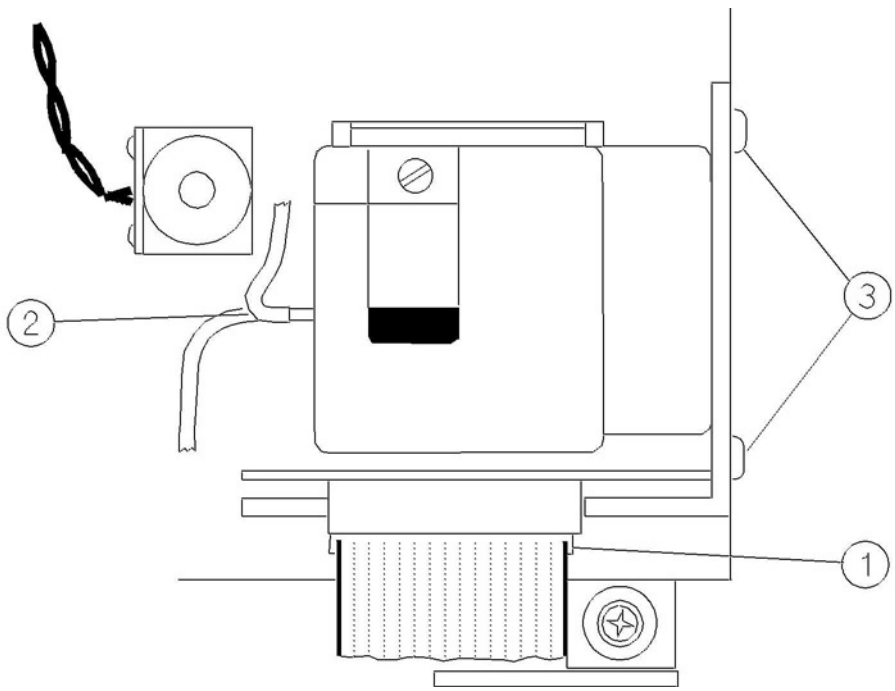

Figure 44 Removing and Replacing the Agent ID Head

Pump

Removal

To remove the pump (refer to Figure 45):

1 Ensure that the module is switched off and isolated from the mains power supply. Remove the cover of the module.

2 Remove the pneumatic connections (1) and/or (4) from the pump.

3 Remove the power connection from the main PC board (2).

4 Using a cross-tipped screwdriver, remove the two screws and washers (3) securing the pump to the IR measurement mounting bracket.

5 Carefully slide out the pump from the IR measurement mounting bracket.

Replacement

To replace the pump (refer to Figure 45):

1 Carefully position the pump so that the threaded bores in the pump align with the locating holes on the IR measurement mounting bracket.

2 Using a cross-tipped screwdriver, replace the two screws and washers (3) securing the pump to the IR measurement mounting bracket.

3 Replace the connection (2) to the main PC board (to the dc pump connector).

4 Replace the pneumatic connections (1) and/or (4) to the pump. Check that all tubing is tightly connected and show no signs of damage.

NOTE After replacing the pump, check that all flat-cable connectors are firmly seated and show no signs of damage.

5 Replace the top cover of the module.

Now perform the performance checks described in the “Test and Inspection Matrix” on page 94 and reset the pump hours.

To reset pump hours, select **`Reset Pump Hours`** from the **`Setup Gas Analyzer`** menu in the monitor’s service mode. Confirm when prompted.

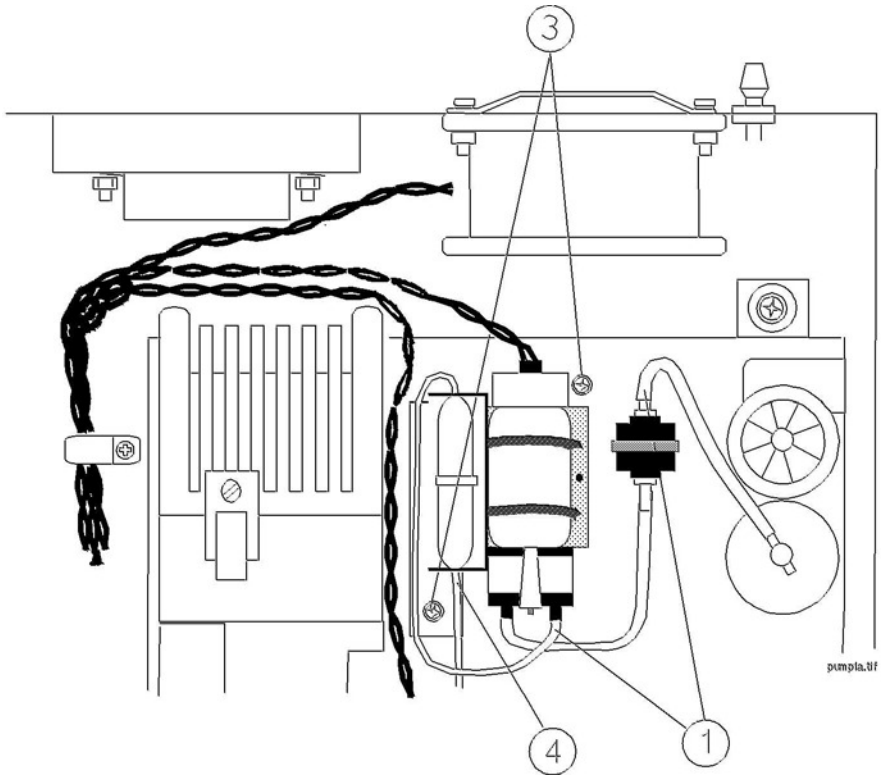

Figure 45 Replacing the Pump

Fan

Removal

To remove the fan (refer to Figure 46 and Figure 47):

1 Ensure that the Anesthetic Gas Module is switched off and isolated from the mains power supply. Remove the top cover of the module.

2 Remove the power connector (1) from the main PC board.

3 Pry the twisted pair supplying power from the fan out of the cable clip (2).

4 Using a cross-tipped screwdriver, remove the four screws and washers (3) securing the fan and the grill to the back panel of the module.

5 Remove the fan and connecting cable from the module.

Replacement

To replace the fan (refer to Figure 46 and Figure 47):

1 Ensure that the Module is switched off and isolated from the mains power supply.
Replace the fan and connecting cable.

2 Replace the four screws and washers (3) that secure the fan into the back panel of the module.

3 Snap the twisted pair from the fan into the cable clip (2) securing the twisted pairs that connect the IR measurement head with the main PC board.

4 Replace the connector (1) to the main PC board.

5 Replace the top cover of the module.

Now perform the performance checks described in the “Test and Inspection Matrix” on page 94.

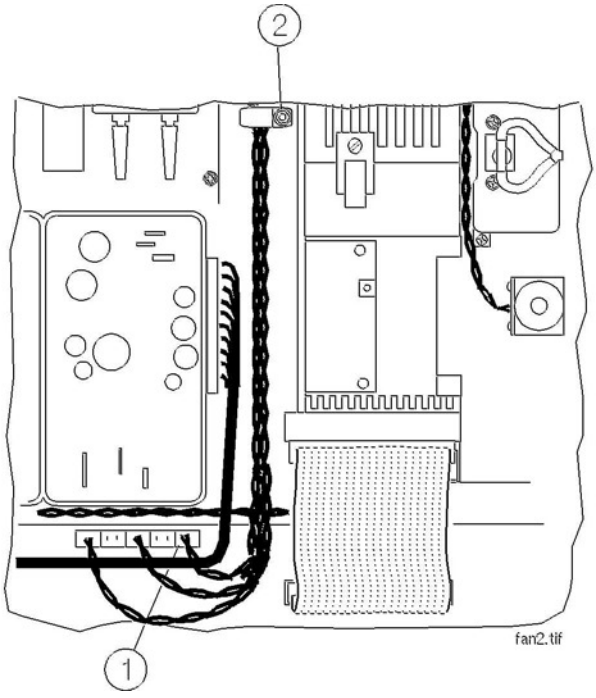

Figure 46 Removing the Fan Cabling

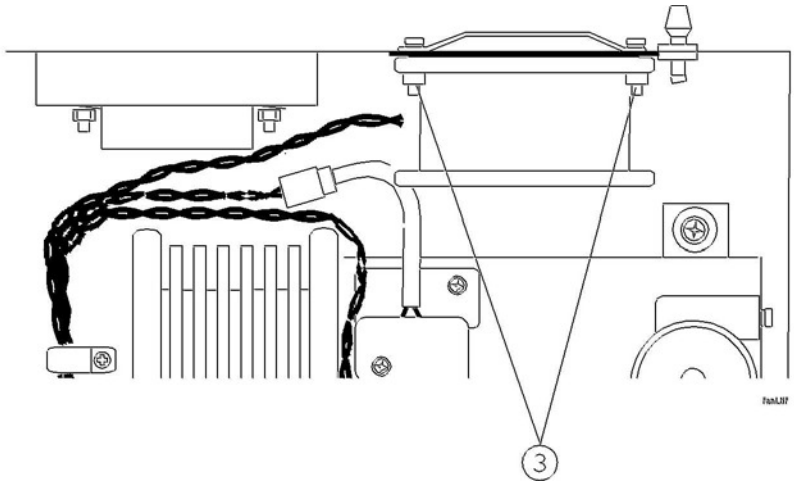

Figure 47 Removing the Fan

Solenoid Valve #2

Removal

To remove solenoid valve #2 (refer to Figure 48):

1 Ensure that the Module is switched off and isolated from the mains power supply. Remove the top cover of the module.

2 Remove the pneumatic tubing (1) from solenoid valve #2.

3 Remove the connection (2) from the main PC board.

4 Using a cross-tipped screwdriver, remove the two screws (3) securing the solenoid valve to its bracket.

5 Remove solenoid valve #2.

Replacement

To replace solenoid valve #2 (refer to Figure 48):

1 Ensure that the Module is switched off and isolated from the mains power supply.

2 Position the solenoid valve on its bracket so that the locating holes on the valve align with threaded bores in the bracket.

3 Using a cross-tipped screwdriver, replace the two screws (3) securing the solenoid valve to its bracket.

4 Replace the connection (2) to the main PC board.

5 Replace the pneumatic tubing (1) to solenoid valve #2. Check that all tubing is tightly connected and show no signs of damage.

NOTE After replacing solenoid valve #2, check that all flat-cable connectors are firmly seated and show no signs of damage.

6 Replace the top cover of the module.

Now perform the performance checks described “Test and Inspection Matrix” on page 94.

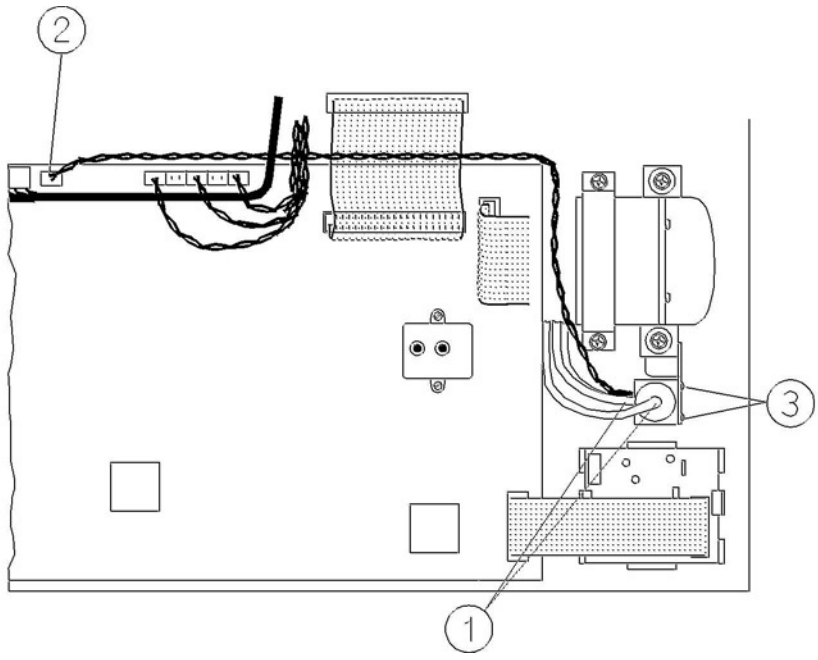

Figure 48 Removing the Solenoid Valve #2

Top Cover PC Board

Removal

To remove the top cover PC board (refer to Figure 49 and Figure 50):

1 Ensure that the Module is switched off and isolated from the mains power supply. Remove the top cover of the module.

2 Remove the connector (1) from the top cover PC board.

3 Using a hex-socket screwdriver, remove the three nuts, washers and spacers (2) securing the PC board to the top cover of the module.

4 Remove the PC board.

Replacement

To replace the top cover PC board (refer to Figure 49 and Figure 50):

1 Ensure that the Module is switched off and isolated from the mains power.

2 Carefully fit the PC board over the three locating screws on the top cover of the module.

3 Using a hex-socket screwdriver, replace the three nuts, washers and spacers (2) securing the PC board to the top cover.

4 Replace the connector (1) to the top cover PC board.

5 Replace the top cover of the module.

Now perform the performance checks described “Test and Inspection Matrix” on page 94.

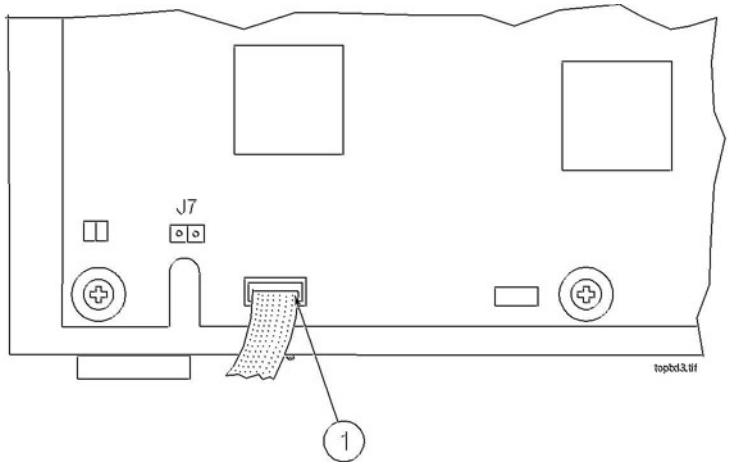

Figure 49 Removing the Top Cover PC Board Connection

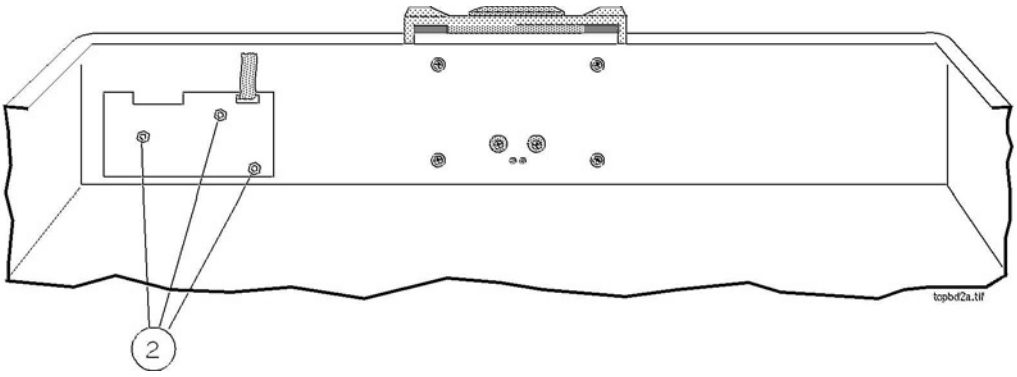

Figure 50 Removing the Top Cover PC Board

Watertrap Manifold and Protector

Removal

To remove the manifold and protector (refer to Figure 51):

1 Remove the top cover of the module.

2 Remove the Nafion tubing and purple connector tubing from the manifold connectors (1) on the inside of the front cover.

3 Using a cross-tipped screwdriver, unscrew the 4 screws (2) securing the protector to the front cover and remove the protector.

4 Using a cross-tipped screwdriver, unscrew the 2 screws (3) securing the manifold to the protector.

Replacement

To replace the manifold and protector (refer to Figure 51):

1 Using a cross-tipped screwdriver, replace the 2 screws securing the manifold to the protector.

2 Using a cross-tipped screwdriver, replace the 4 screws securing the protector to the front cover.

3 Replace the Nafion tubing and purple connector tubing onto the manifold connectors on the inside of the front cover. Take care to attach the tubing with the red mark at the end to the connector with the red marking (this indicates the “drainage” path). The gap between the end of the nafion tubing and the manifold connectors (visible through the purple connector tubing) must be less than 1mm.

Now perform the performance checks described “Test and Inspection Matrix” on page 94.

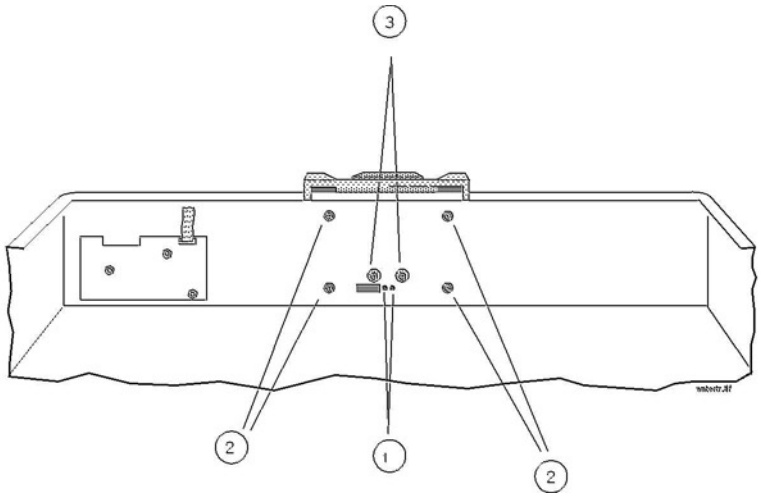

Figure 51 Removing the Watertrap Manifold and Protector

Power Fuses

Removal

To remove the power fuses (refer to Figure 52):

1 Using a flat-tipped screwdriver, unscrew the fuse counter-clockwise (1).

2 Pull the fuse cap and fuse clear of the display.

3 Pull the fuse out of the fuse cap and note the fuse rating.

4 Repeat the steps for the other fuse.

Replacement

To replace the power fuses (refer to Figure 52):

1 Put one end of the fuse into the fuse cap.

2 Put the fuse and fuse cap into the receptacle in the rear of the display.

3 Using a flat-tipped screwdriver, screw the fuse clockwise into the receptacle.

4 Repeat the steps for the other fuse.

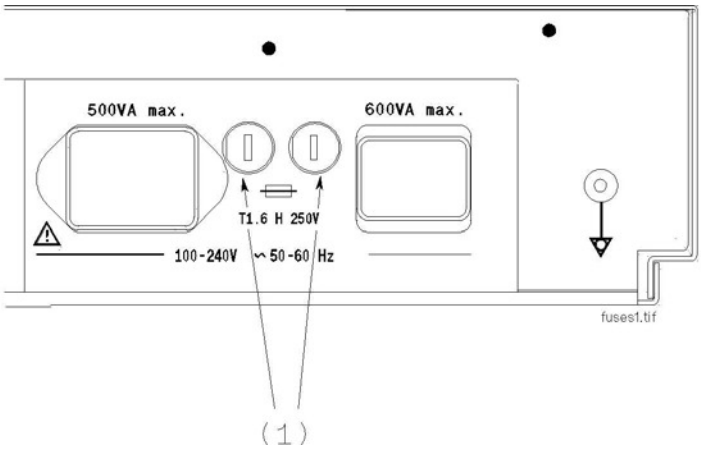

Figure 52 The Power Fuses

Test and Inspection Matrix

The Test and Inspection Matrix describes:

- which tests need to be performed
- the expected test results
- what should be written by Philips service personnel on the Philips Installation Report or Customer Service Order (CSO).

The second section *When to Perform Test Blocks* describes when the tests should be performed.

These tables should be followed for all installations and repairs.

NOTE The test procedures outlined for this test block are to be used only for verifying safe installation or service of the product in question. The setups for these tests and the acceptable ranges or values are derived from local and international standards but may not be equivalent. These are not a substitute for local safety testing where it is required for an installation or service event.

Test Block Name	Test or Inspection to be performed	Expected Test Result	What to Record on Service Record
Visual	Check for any mechanical damage and all external leads and accessories. Is the device free of damage and are all accessories properly set up?	Expected answer is "yes". If so, visual test is passed.	V: P or V: F where P=Pass and F=Fail
Power On	Switch on the module. A built-in selftest and communication test are running for two minutes after "Power On". The green setup LED near the power button indicates by flashing if one of the tests failed. When tests are successfully completed after 2 minutes the LED is off and the AGM will enter warmup mode (indicated by INOP "GA.WARMUP"). Does AGM boot up successfully without displaying any error or malfunction messages?	Expected answer is "yes". If so, PowerOn test is passed.	PO: P or PO: F where P=Pass and F=Fail
Performance Leakage Check	Perform Leakage Check	Measured flow value: 0-4 ml/min	PL: P or PL: F where P=Pass and F=Fail
Performance Flowrate Check	Perform Flowrate Check. Document the actual flowrates.	Flowrates M1026A #A02/#A05: Purge = x1 (310 +/- 15 ml/min) Measurement Path = x2 (labelled value +/- 3 ml/min) Normal = x3 (132 - 170 ml/min)	PF: P/x1/x2/x3 or PF: F/x1/x2/x3 where P=Pass and F=Fail

Test Block Name	Test or Inspection to be performed	Expected Test Result	What to Record on Service Record
Performance Diagnostic Check	Perform the Diagnostic/Error Check. Does the status of each subassembly display as "OK" in **`Gas Analyzer Diagnostic`** window? The subassemblies are: - Meas. Assembly - Meas. Opt. Path - Agent-ID - O2 Assembly - Main PCB - Power Supply - Pneumatic System - Operat. Temperature	Expected answer is "yes". If so, Error/Diagnostic check is passed.	PD:P or PD:F where P=Pass and F=Fail
Performance Zero Calibration Check	Does the status of each channel display as "OK" in the **`Gas Analyzer Calibration`** window after zero calibration? The channels are: - Press - O2 - CO2 - N2O - Subst.	Expected answer is "yes". If so, zero calibration check is passed.	PZC:P or PZC:F where P=Pass and F=Fail
Performance Barometric Pressure Check	Perform Barometric Pressure Check .	Difference between actual measured pressure value and actual ambient pressure value = x (<= 5 mmHg)	PBP:P/x or PBP:F/x where P=Pass and F=Fail

Test Block Name	Test or Inspection to be performed	Expected Test Result	What to Record on Service Record
Performance Span Calibration Check	Perform the Span Calibration Check. Document the actual measured values for each gas channel. If failed (out of specified tolerances) - perform a span calibration for specific gas channel.	O2 value = x1 (+- 1.0% to O2 calibration value) CO2 value = x2 (+- 0.1% to CO2 calibration value) N2O value = x3 (+- 2.0% to N2O calibration value)) Agent value = x4 (+- 0.1% to Agent value) When calibration of EACH gas channel was necessary, status of each channel shows "Done". Result to report in this case is PSH:P (without individual gas value results)	PSH:P/x1/x2/x3/x4 or PSH:F/x1/x2/x3/x4 where P=Pass and F=Fail alternatively PSH:P or PSH:F where P=Pass and F=Fail
Performance Normal Operation Check	Enter Monitoring mode and check that all AGM related waves and numerics are present and correspond to the user's configuration. Are all AGM waves and numerics present according to the user's configuration?	Expected answer is "yes". If so, performance normal operation check is passed.	PNO: P or PNO: F where P=Pass and F=Fail
Performance Pump Test	Using the pump test kit provided in the PM kit, clean and test the pump according to the included instructions. Did the pump pass the test?	Expected answer is "yes". If so, test is passed.	PPU: P or PPU: F where P=Pass and F=Fail
Performance Fan Check	Check that the cooling fan runs smoothly. Did the fan pass the test?	Expected answer is "yes". If so, fan check is passed.	PFA: P or PFA: F where P=Pass and F=Fail

Test Block Name	Test or Inspection to be performed	Expected Test Result	What to Record on Service Record
Safety	Step 1 Protective Earth. See Safety Test Appendix for details / S (2). Step 2 Enclosure Leakage Current - Normal Condition. See Safety Test Appendix for details / S (4). Step 3 Enclosure Leakage Current - S.F.C. Open Supply. See Safety Test Appendix for details / S (5). Step 4 Enclosure Leakage Current - S.F.C. Open Earth. See Safety Test Appendix for details / S (6).	With mains cable: Maximum impedance = x1 (<= 100 mOhms) Maximum leakage current = x2 (<= 100 uA) Maximum leakage current = x3 (<=500uA) (<= 300 uA, for US and/or UL devices) Maximum leakage current = x4 (<=500uA) (<= 300 uA, for US and/or UL devices)	S:P/x1/x2/x3/x4 or S:F/x1/x2/x3/x4 where P=Pass and F=Fail

When to Perform Test Blocks

Service Event (When performing.....	Test Block(s) Required ..... Complete these tests)
Installation	Visual, Power On Performance Leakage Check, Diagnostic Check, Zero Calibration Check, Barometric Pressure Check, Span Calibration Check and Normal Operation Check

Service Event (When performing.....	Test Block(s) Required ..... Complete these tests)
Repair/Parts replacement	Performance Leakage Check, Flowrate Check, Diagnostic Check, Zero Calibration Check, Barometric Pressure Check, Span Calibration Check and Normal Operation Check, Safety (whenever the topcover was opened)
Preventive Maintenance	Parts Replacement as described in Chapter 5 of the Anesthetic Gas Module Service Manual (part number M1026-9000B). Fan Check, Pump Test, Performance Leakage Check, Flowrate Check, Diagnostic Check, Zero Calibration Check, Barometric Pressure Check, Span Calibration Check and Normal Operation Check, Safety

Safety Test Appendix

The test procedures outlined in this appendix are to be used **only** for verifying safe installation or service of the product in question.

The setups used for these tests and the acceptable ranges of values are derived from local and international standards but may not be equivalent.

These tests are **not a substitute for local safety testing** where it is required for an installation or a service event.

If using the Metron Safety tester use your local regulation to perform the test, *for example* in Europe IEC60601-1/IEC60601-1-1 and in the US UL2601-1. The Metron Report should print results with the names listed below, along with other data.

"Safety checks at installation refer to safety aspects directly related to the installaton and setup activities and not to intrinsic safety features that have already been checked during final acceptance testing at the factory".

Test Block name	Test or Inspection to perform
S(2) Protective Earth	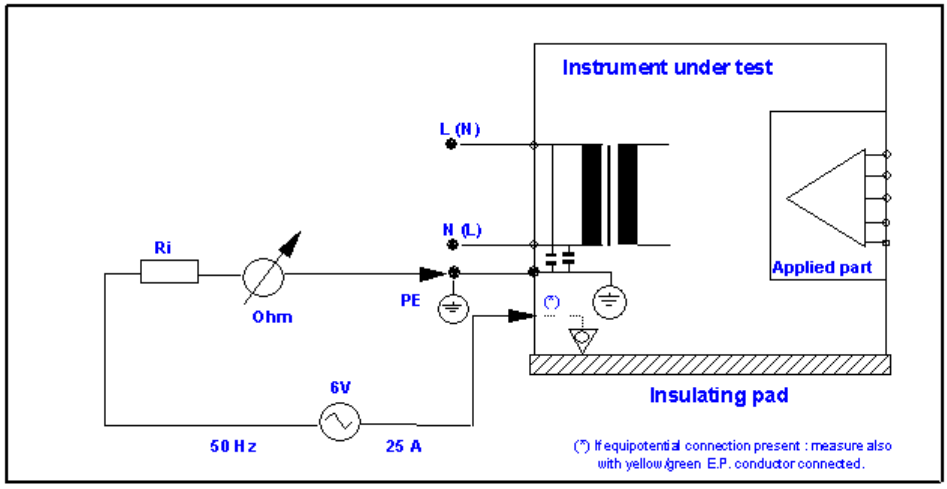
	Measures impedance of Protective Earth (PE) terminal to all exposed metal parts of Instrument under Test (IUT), which are for safety reasons connected to the Protective Earth (PE). Includes normally the wiring in the mains cable (max. 100 mOhm). Test current 25 Amps applied for 5 seconds to 10 seconds. The recommendation is to flex the main cable during the test in order to identify potential **bad** contact or damage of the earth wire. *Safety test according IEC 60601-1 (Clause 18)* Report largest value.
S(4) Test ENCL.1: Enclosure Leakage Current - NC (normal condition)	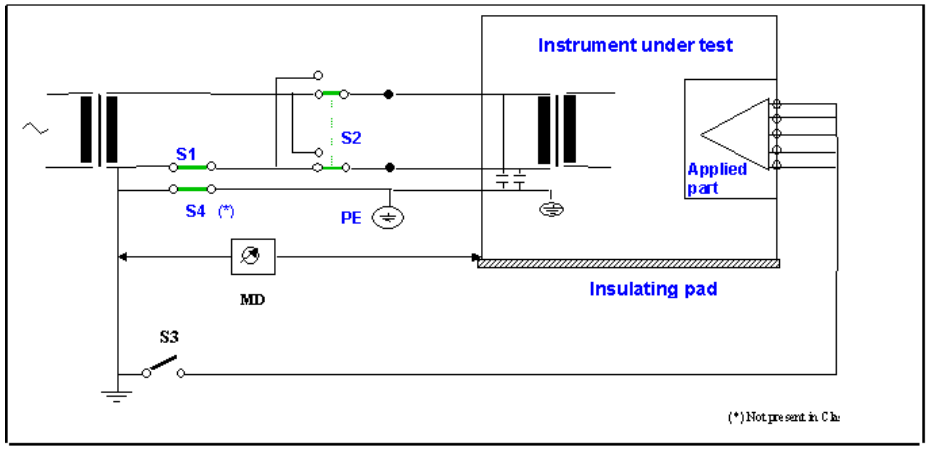
	Applicable to Class 1 & 2 equipment, type B, BF & CF Applied Parts.Measures leakage current of exposed metal parts of UIT; normal and reversed polarity using S2. For type BF & CF Applied Parts measures with AP/GND switch S3 open and closed. *Safety test according to IEC 60601-1 (Clause 19.4g)* Report largest value.

Test Block name	Test or Inspection to perform
S(5) Enclosure Leakage Current – Single Fault Condition Open Supply	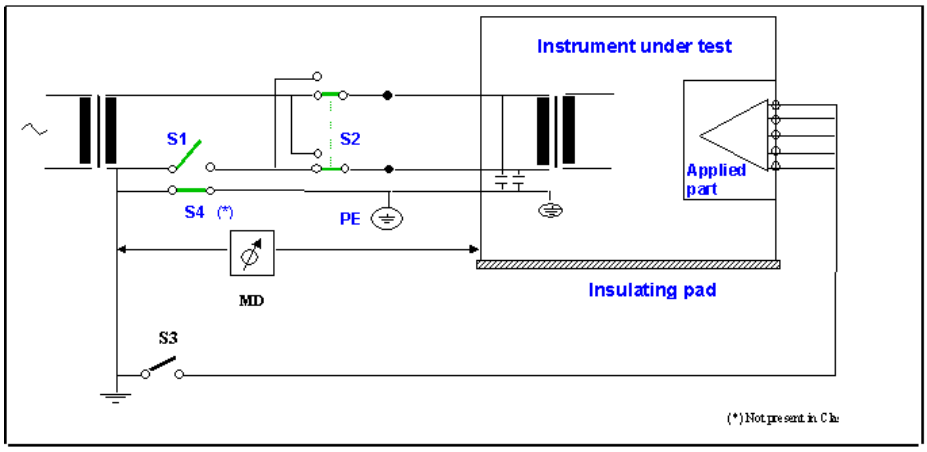
	Applicable to Class 1 & 2 equipment, type B, BF & CF Applied Parts.Measures leakage current of exposed metal parts of IUT with one supply lead interrupted (S1=open); normal and & reversed polarity using S2. For type BF a& CF Applied Parts measures with AP/ GND switch S3 open and closed. *Safety test according to IEC 60601-1 (Clause 19.4g)*Report largest value.
S(6) Enclosure Leakage Current - Single Fault Condition Open Earth (Ground)	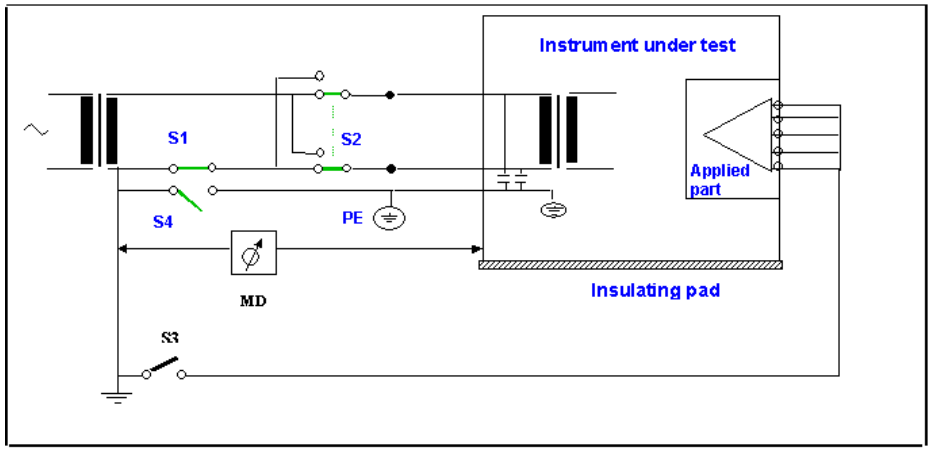
	Applicable to Class 1 equipment, type B, BF, & CF Applied Parts. Measures leakage current of exposed metal parts of UIT with Protective Earth open-circuit (S4=open); normal & reversed polarity using S2. For type BF & CF Applied Parts measures with with AP/GND switch S3 open and closed. *Safety test according to IEC 60601-1 (Clause 19.4g)* Report largest value.

Parts List

This chapter provides the replacement and exchange part numbers (if available) for the Philips M1026A Anesthetic Gas Module and calibration equipment. Refer to Figure 53 and the following table to identify the part and part number.

The circuit boards used in the Anesthetic Gas Module contain Surface Mounted Devices (SMD) which can only be repaired with special equipment, not available in the field. For this reason, the majority of the parts used in the system can only be replaced at board level.

Table legend:

R	Replacement Part
E	Exchange Part
Std.A-ID	Standard Agent Identification
Ext.A-ID	Extended Agent Identification

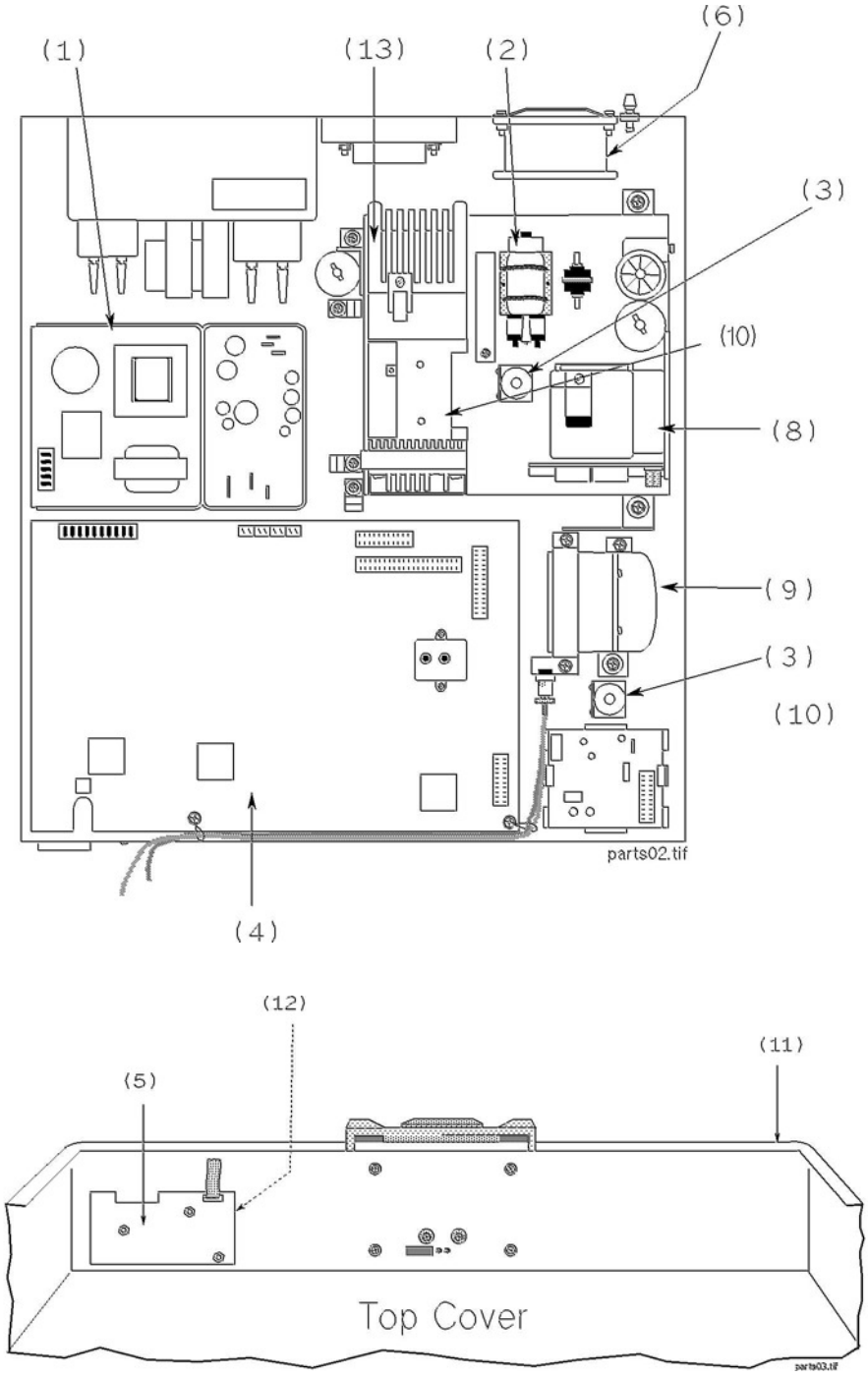

Figure 53 Replacement Parts

Part Number	Description	R/E
M1026-60100	Power Supply, 2 output, 3A, 120mA	R
M1026-60330	Pump Assy.	R
M1026-60102	Solenoid Valve Assy.	R
M1026-60503	Main PCB (fully loaded) for 5 Agent-ID	R
M1026-69503	Main PCB (fully loaded) for 5 Agent-ID	E
M1026-60105	Front Panel PCB	R
M1026-60106	Fan, 12Vdc	R
M1026-60510	M1026A 5 Agent Identification (A-ID)	R
M1026-69510	M1026A 5 Agent Identification (A-ID)	E
M1026-60138	Oxygen Sensor Assy. w/ integrated pcb	R
M1026-69138	Oxygen Sensor Assy. w/ integrated pcb	E
M1026-60112	Sample Cell	R
M1026-60135	Top cover	R
M1026-60108	IR Assembly Kit	R
M1026-69108	IR Assembly Kit	E
M1026-01200	Retrofit Clip	R
M1026-60146	Manifold Seals	R

Part Number of Kit	Description
M1026-60132	Preventive Maintenance Kit. Includes:
	Nafion tubing with internal bacterial filters
	Room air filter
	Pump outlet filter
	Pump test tubing
	Watertrap manifold seals
M1026-60117	Gas Inlet/Outlet Kit. Includes:
	Barb
	Retainer
	Nut
	Fitting 1/8 in. ID (4mm), Female inline coupling
	Fitting with nut, Panel Mount, Male coupling (2 pieces)

Part Number of Kit	Description
M1026-60119	Tubing Kit. Includes:
	Tubing 1/8 in. ID x 3/16 in. OD (1 ft.)
	Tubing 1/32 in. ID x 3/32 in. OD (5 ft.)
	Tubing 039 in. ID x 120 in. OD (5 ft.)
	Tubing 060 in. ID x 187 in. OD (5 ft.)
	Tubing 1.14 mm ID x 1.57 mm OD (5 ft.)
	Tube fitting, Tee for 1/16 in. tubing (Qty=2 per AGM)
	Tube fitting, Tee for 1/16 in. ID & 1/8 in. ID tubing (Qty=1 per AGM)
	Pulse dampener kit, with T-fitting
	Flow-control tubing assembly
	Flow restriction kit
M1026-60120	Power Button Kit (5 pieces). Includes:
	Power button
	Power button switch
	Coupler, power switch
	Shaft, short, power switch
	Pushrod, power switch
M1026-60121	Power Module Kit. Includes:
	Filter, Power Line, 1.5A, 250V
	Assy. Daisy chain power
	Assy. Power entry module
	Assy. Harness, AC power-filtered
	Assy. Harness, AC power unfiltered, black
	Assy. Harness, AC power unfiltered, white
M1026-60122	Cable Kit (6 pieces). Includes:
	Cable, Assy. 9 pin (power supply to PCB)
	Cable, Assy. Flat. 40 pin (4710 head to PCB)
	Cable, Assy. Flat, 26 pin (4740 head to PCB)
	Cable, Assy. Flat, DB25 to 26 pin (RS232/ PCB)
	Cable, Assy. Flat, 16 pin (O2 PCB to PCB)
	Cable, Assy, 2 pin with LED
M1026-60123	Rubber Spacer Kit
M1026-60127	Main EPROM
M1026-60133	WT Manifold kit
M1026-60134	WT Protector kit
M1026-60136	Flow Split Test Kit
2110-0495CP	Fuses

Calibration Equipment

The following table lists the part numbers for the calibration equipment.

Part Number	Description
M1026-60144	Electronic Flow meter
M1657B	Watertrap
M1658A	Sample Tubing
M1659A	Calibration Tube Assembly
M1660A[1]	Calibration Gas Assembly (3% Halocarbon 22, 5% CO_2, 40% N_2O, 52% O_2)

1.This Calibration Gas Assembly cannot be ordered in Japan; use Scott Medical Products DOT29M1060 instead.

Previous part number	New part number	Effective Date
M1026-60101 Pump assy., square-shaped	M1026-60130 Pump assy., round-shaped	August 1997
M1026-60111 Oxygen Sensor assy. with PC board separate	M1026-60138 Oxygen Sensor assy. with PC board integrated in housing	June 1998
M1026-60110 Ext.Agent-ID	M1026-60210 Ext. Agent-ID	October 1998
M1026-60130 Pump Kit	M1026-60230 Pump Kit	June 1999
M1026-60230 Pump Kit	M1026-60330 Pump Kit	April 2000

O

P

R

S

T

W